NOTE:

DITCH DETAIL IS NOT SHOWN ON CROSS SECTIONS DWG. #CE-10891-EM SHEETS 1-3, BECAUSE OF PLOT SCALE.

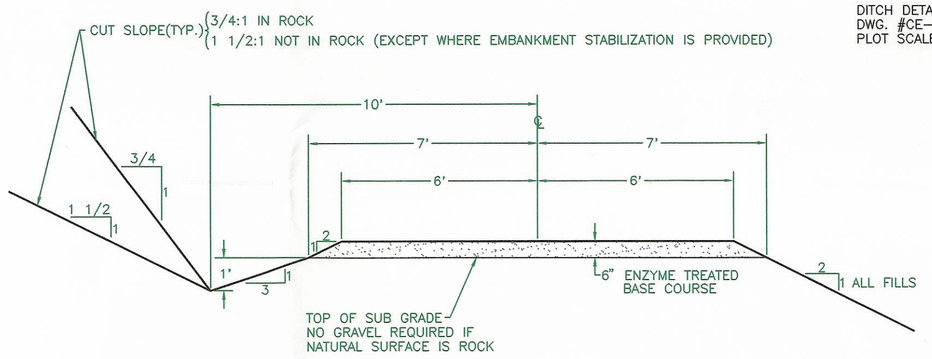

TYP. ROAD CROSS SECTION
STA. 3+03 TO 14+26
NOT TO SCALE

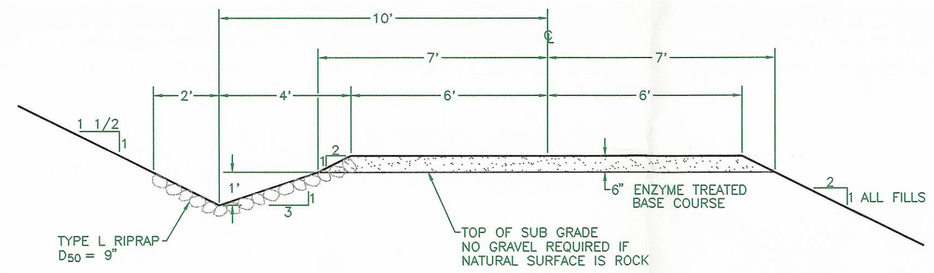

RIPRAP DITCH
3+36-6+55, 7+69-9+89
& 11+82-13+96
NOT TO SCALE

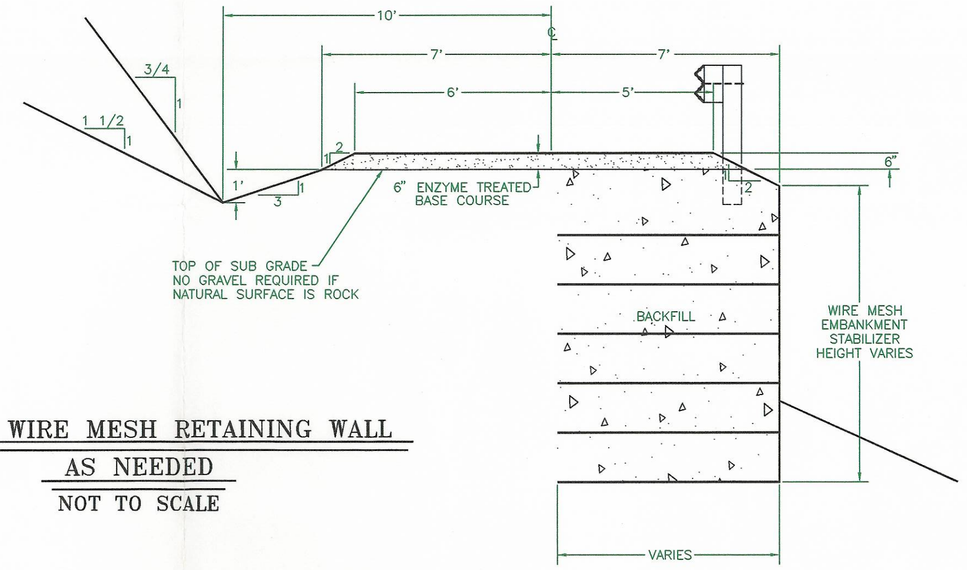

TYPICAL WIRE MESH RETAINING WALL
AS NEEDED
NOT TO SCALE

NOTE:
IF ROAD SLOPE IS 4% TO 6% SKEW CULVERT TO 15°
IF ROAD SLOPE IS 6% TO 9% SKEW CULVERT TO 60°

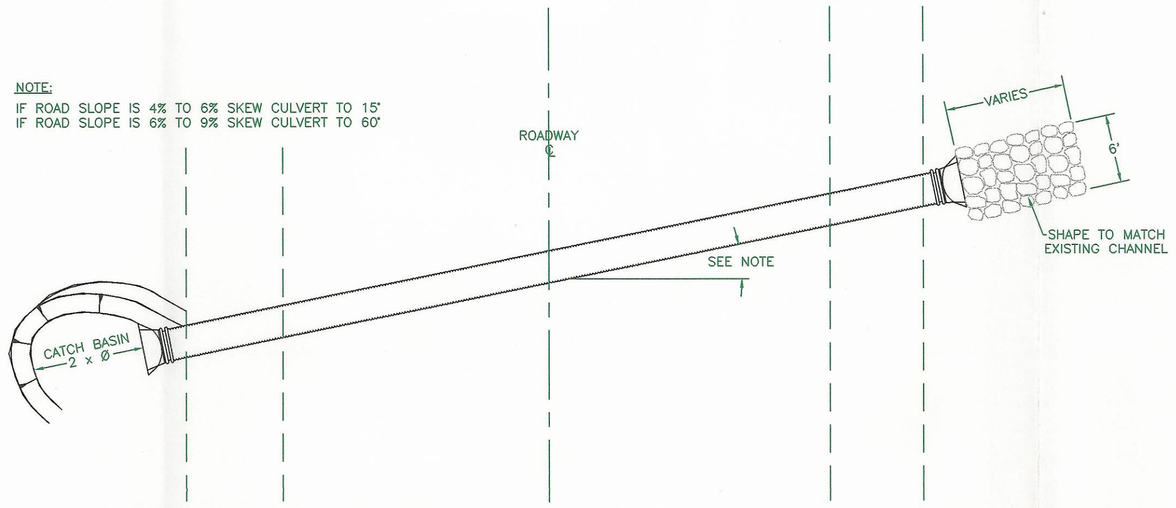

ROAD CULVERT DETAIL/PLAN VIEW
NOT TO SCALE

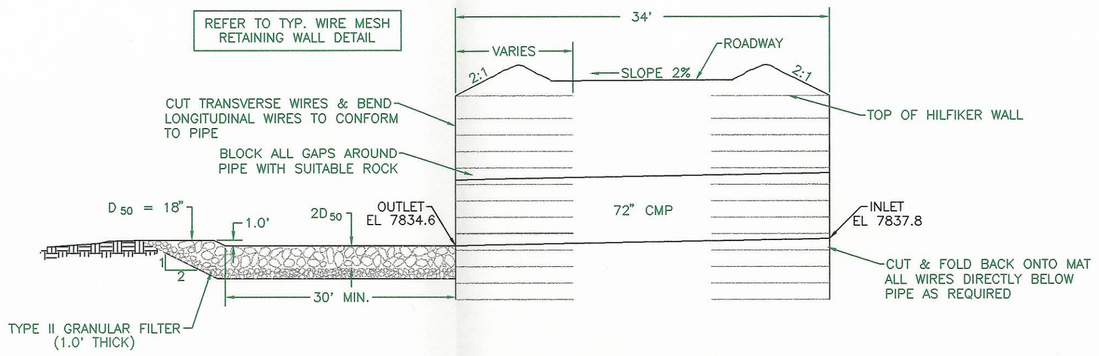

CULVERT #2 DETAIL
NOT TO SCALE

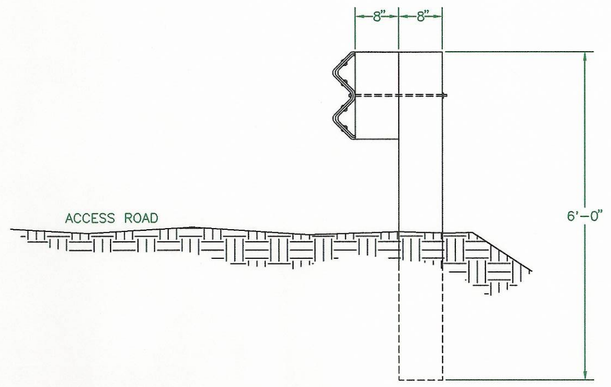

TYP. GUARDRAIL INSTALLATION
NOT TO SCALE

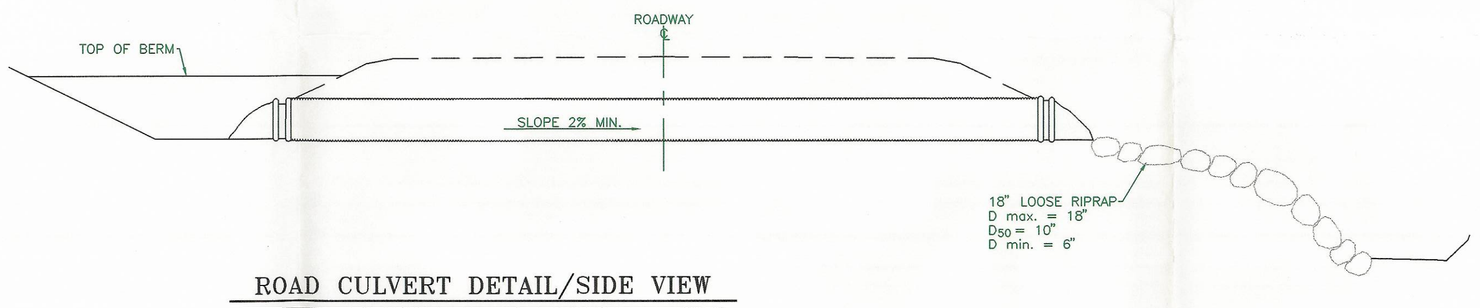

ROAD CULVERT DETAIL/SIDE VIEW
NOT TO SCALE

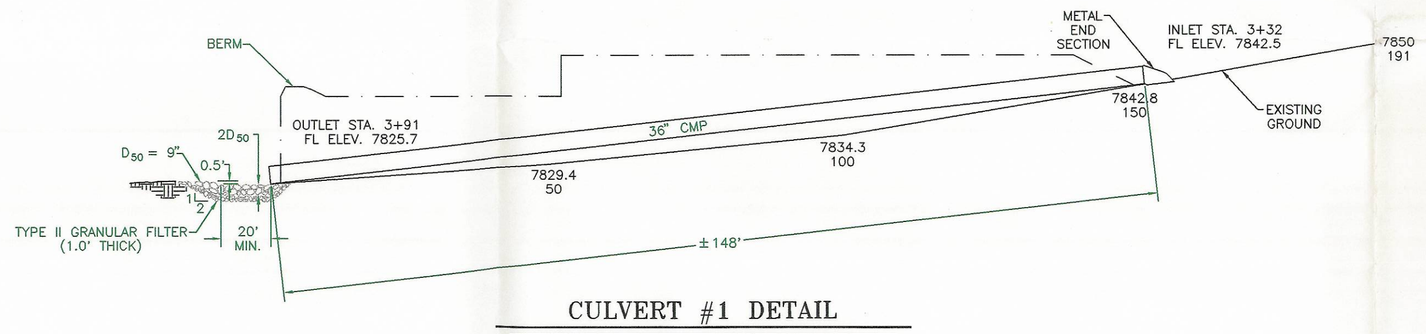

CULVERT #1 DETAIL
NOT TO SCALE

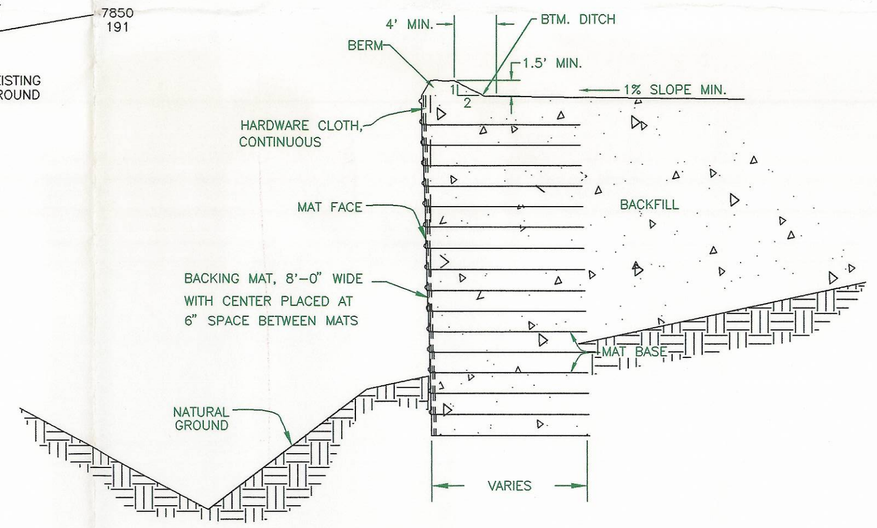

TYPICAL WIRE MESH RETAINING WALL
AS NEEDED
NOT TO SCALE

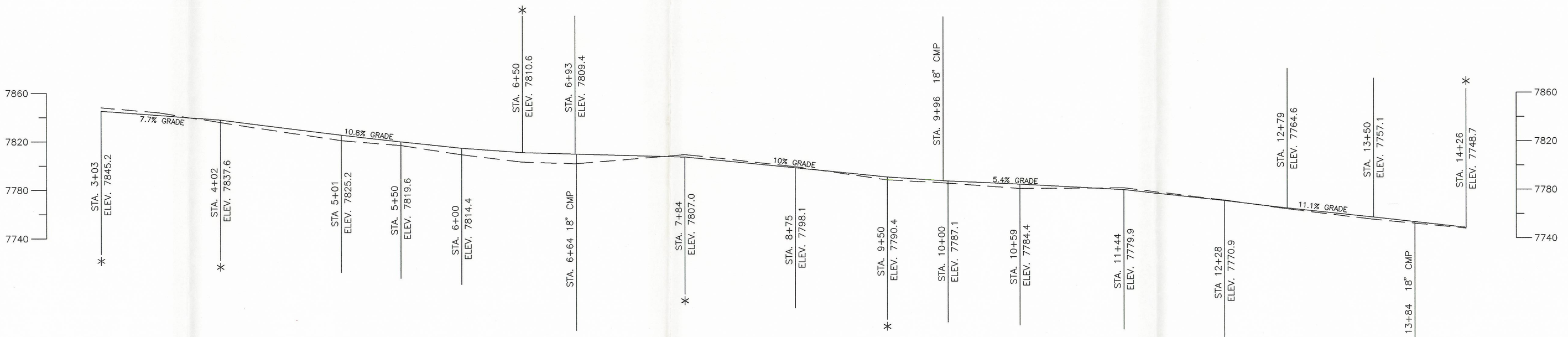

CENTERLINE OF ACCESS ROAD
SCALE: 1" =50'

INCORPORATED
EFFECTIVE:
APR 11 1997
UTAH DIVISION OF GAS AND MINING

LICENSED PROFESSIONAL ENGINEER JOHN CHRISTENSEN 3/6/97 No. 165651 STATE OF UTAH

CAD FILE NAME/DISK#: CE10890

3-9B

DATE	REVISIONS	BY
2-20-97	REVISED TO REFLECT THE AS-BUILT CONDITIONS	KJL

ENERGY WEST
MINING COMPANY
HUNTINGTON, UTAH 84528

DEER CREEK MINE - RILDA CANYON
CENTERLINE ACCESS ROAD PROFILE
TYPICAL SECTION AND DETAILS

DRAWN BY: K. LARSEN
SCALE: AS NOTED
DATE: JULY 10, 1995
DRAWING #: CE-10890-EM
SHEET 1 OF 1
REV. ___