MATERIALS

QTY	DESCRIPTION
1300 ft	REBAR, #6, GR 40
140 ft	REBAR, #8, GR 40
12.5 ft	ROLLED PL, 1/4" THK, 1/4 CIRCLE, 3' RADIUS
	W/ J-BOLTS & 12" EXTENSION
	OR 18" IF USING ALT. DESIGN
12.5 ft	3x3x1/4 L W/ 6" J-BOLTS @ 12" CENTERS
13.0 CYD	CONCRETE, 3000 PSI, 3/4" MINUS AGG.

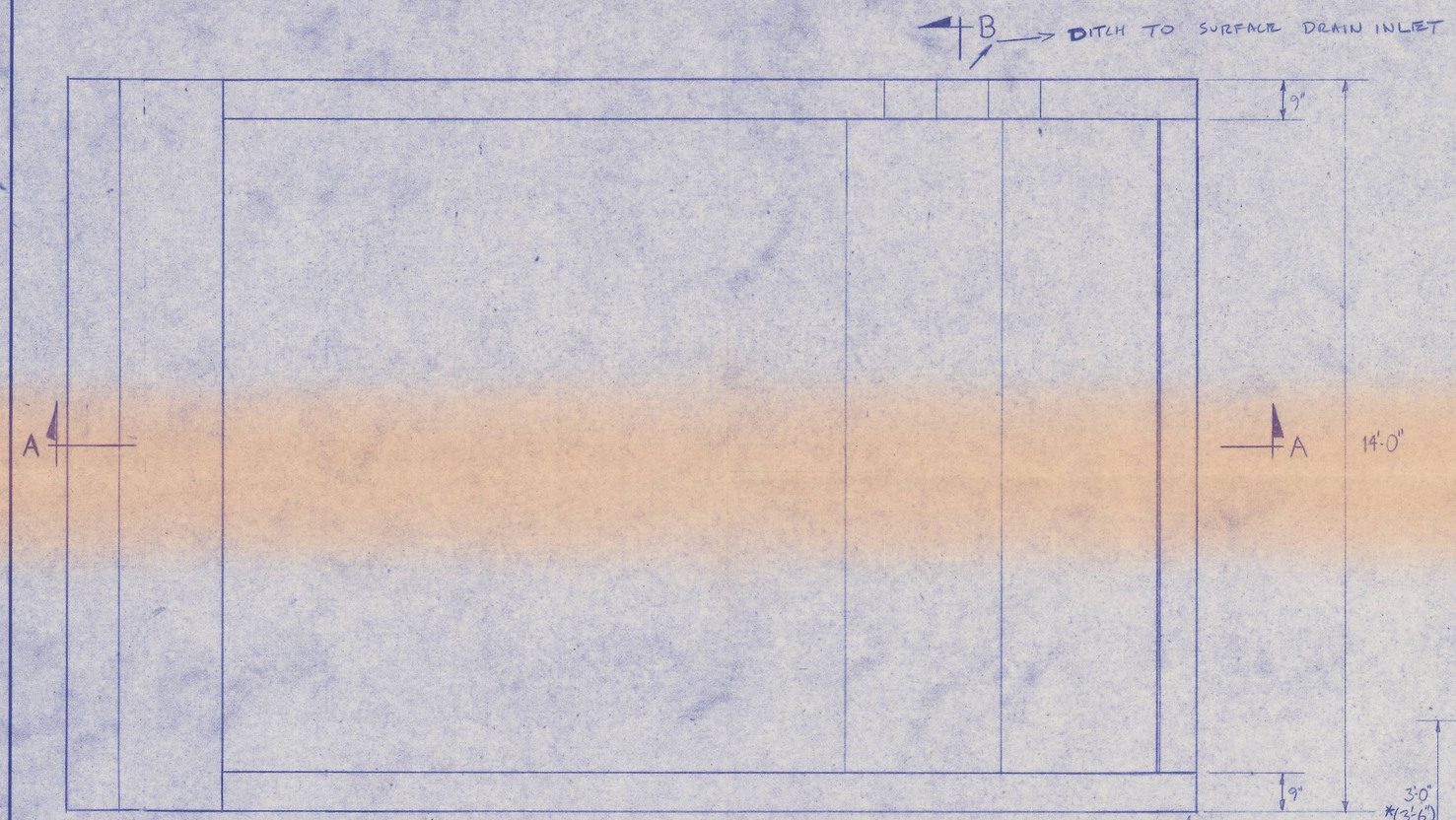

PLAN VIEW

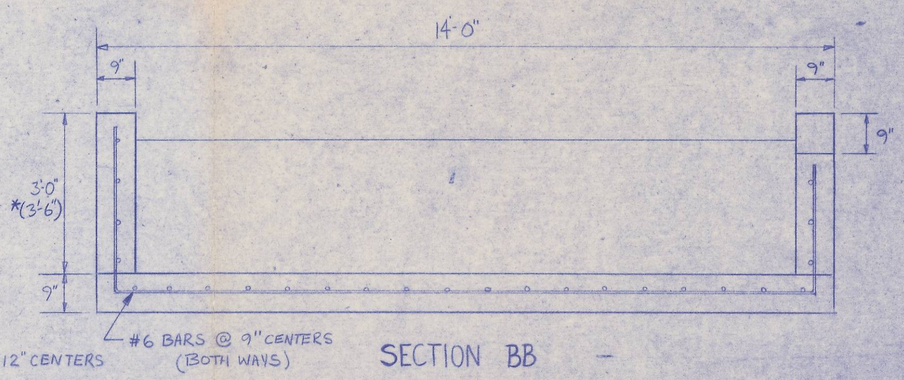

SECTION BB

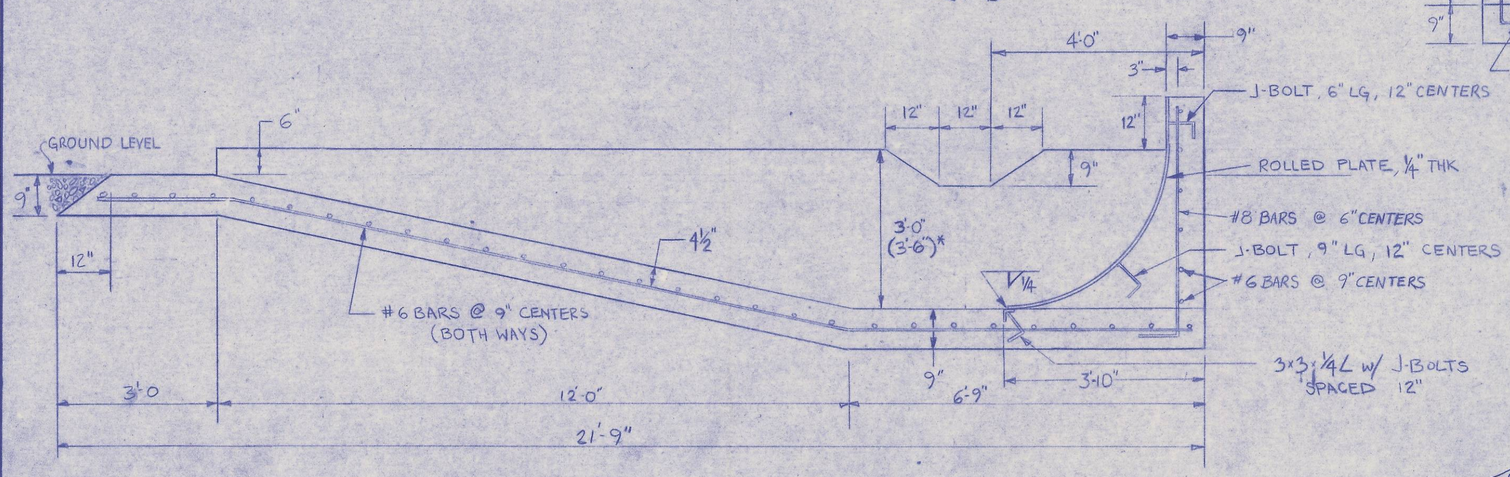

SECTION AA

* ALTERNATE DESIGN = 3'-6" DEEP

NOTES:

1. SLAB MUST BE PLACED ON FIRM SOIL. IF EXISTING MATERIAL IS LOOSE, EXCAVATE AND REPLACE WITH GRANULAR MATERIAL, COMPACTED IN MAX. 6" LIFTS.
2. PORTLAND CEMENT CONCRETE SHALL CONTAIN AT LEAST 6% ENTRAINED AIR.

REGISTERED PROFESSIONAL ENGINEER
NO. 7059
THOMAS J. FAUCHEUX
STATE OF UTAH

Thomas J. Faucheux 10/27/89

THE PLAN SHOWN HEREON REPRESENTS SOUND ENGINEERING PRACTICE.

AMENDMENT TO
APPROVED Mining & Reclamation Plan
Approved, Division of Oil, Gas & Mining
date 11/8/89 by KLS

UTAH POWER & LIGHT
MINING DIVISION
HUNTINGTON, UTAH 84528

DEER CREEK MINE
SEDIMENT TRAP

MARK	REVISIONS	DATE

DRAWN BY:	APPROVED BY:	DRAWING NO.
TJF		DS1159C
SCALE: 1" = 2'-0"	DATE: 9/15/89	