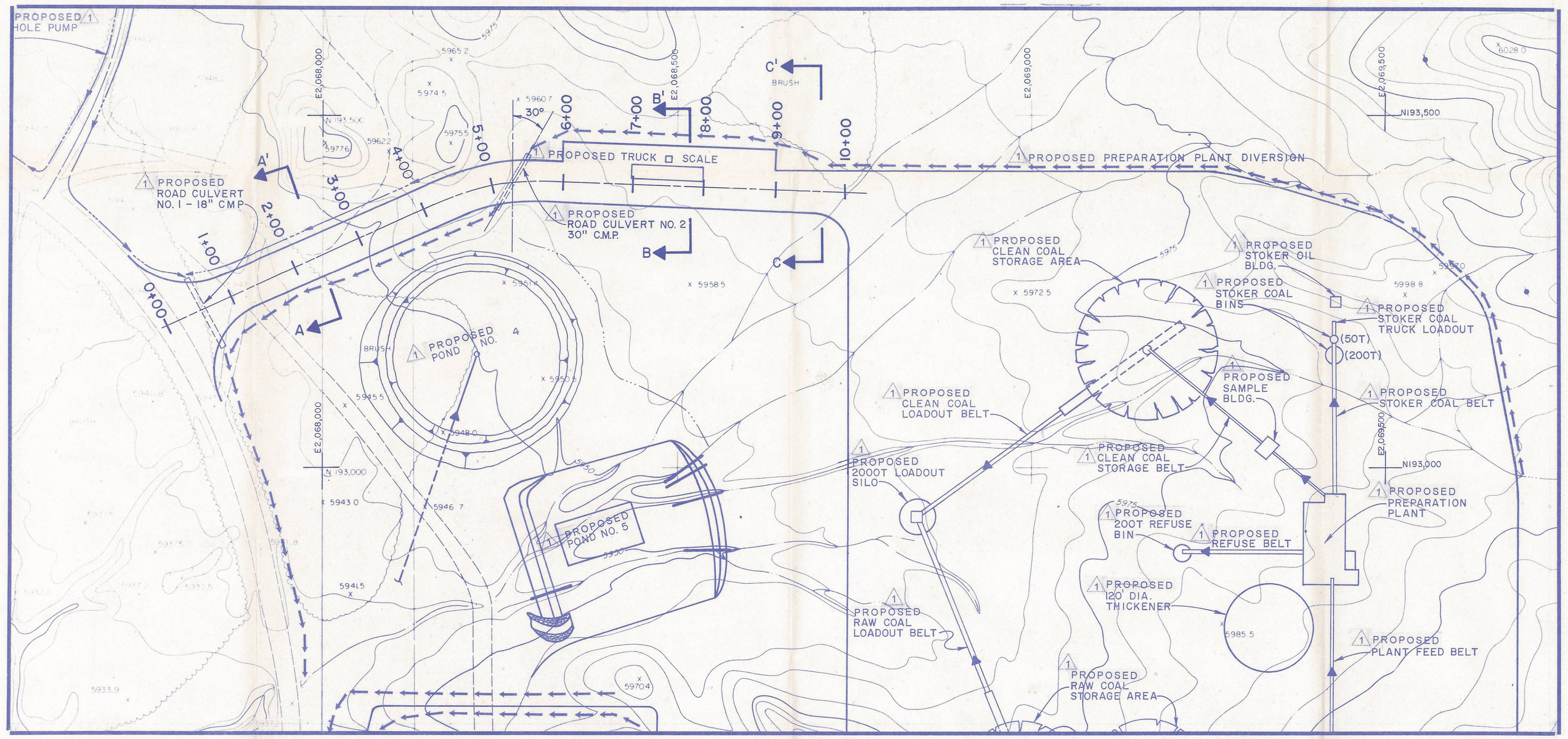

MAIN ENTRANCE ROAD PLAN

SCALE: 1" = 100'

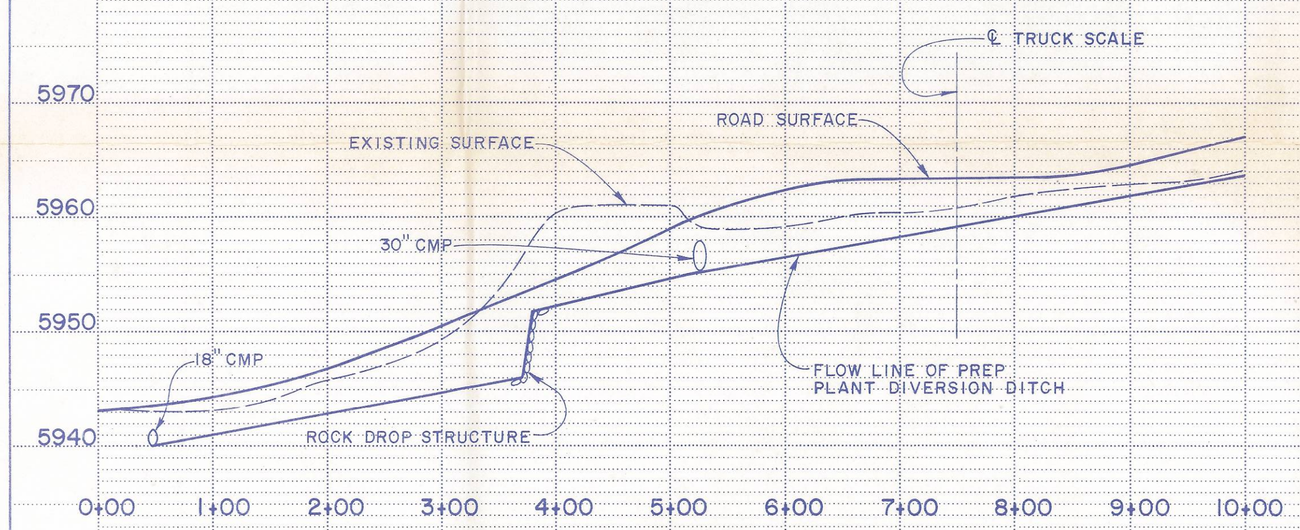

MAIN ENTRANCE ROAD PROFILE

SCALE: 1" = 100' HORIZ.
1" = 10' VERT.

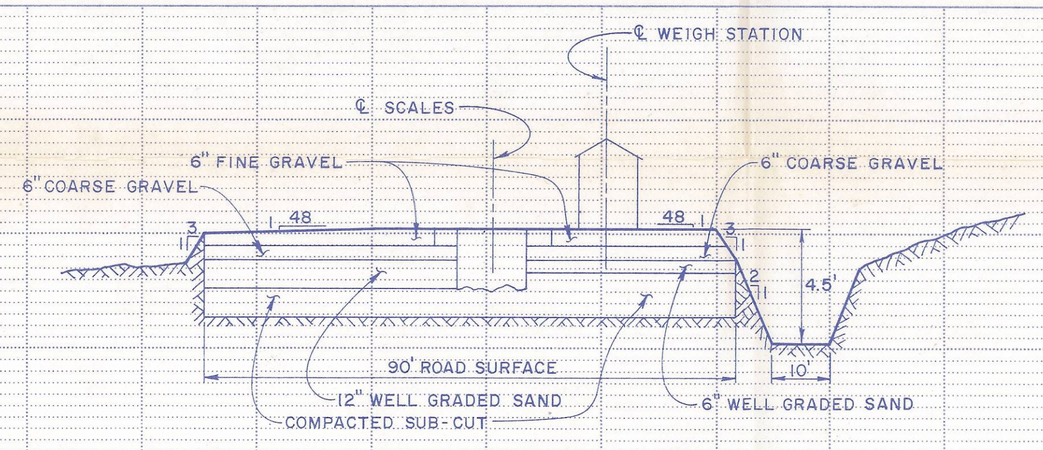

SECTION B-B

SCALE: 1" = 20' HORIZ.
1" = 4' VERT.

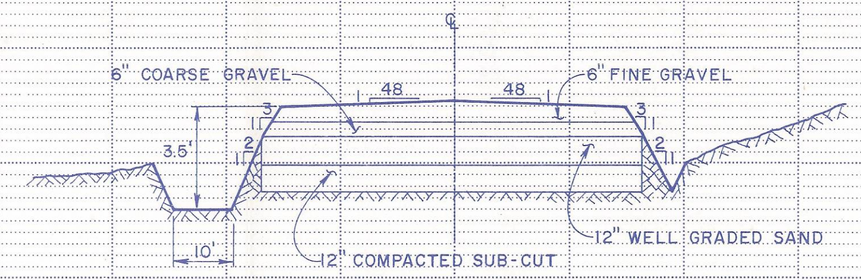

SECTION A-A

SCALE: 1" = 20' HORIZ.
1" = 4' VERT.

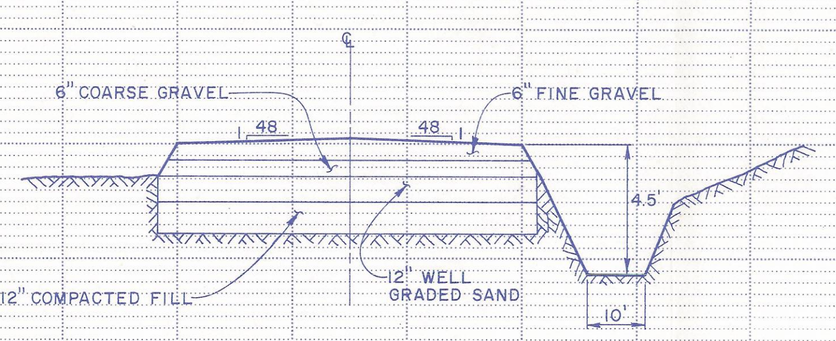

SECTION C-C

SCALE: 1" = 20' HORIZ.
1" = 4' VERT.

NO.	SUB DATE	APPD DATE	REV BY	REVISION DESCRIPTION
1	5/95		T.D.K.	LABELS "EXISTING" & "PROPOSED" ADDED

INCORPORATED
EFFECTIVE
DEC - 1 1997
UTAH DIVISION OIL, GAS & MINING
PRICE FIELD OFFICE

RECEIVED
SEP 14 1995
DIVISION OF OIL
GAS & MINING PRICE UTAH

CONSOLIDATION COAL COMPANY
MIDCONTINENT REGION
12755 OLIVE BLVD. ST. LOUIS, MO. 63141

MAIN ENTRANCE ROAD PREPARATION PLANT SITE PROPOSED PLAN, PROFILE & SECTIONS

MINE	EMERY	DATE	7/90
CHKD.	T.D.K.	SCALE	AS NOTED
APPD.	W.J.D.	DRAWING NO.	PLATE IV-11
DRAWN	A.B.B.	SHEET OF	REV.

PLAN: SURVEYED, PLOTTED, ALIGNMENT CHECKED, RT. OF WAY CHECKED, NOTE BOOK NO., BY, DATE

PROFILE: SURVEYED, PLOTTED, GRADES CHECKED, B. M.'s NOTED, STRUCTURE NOTATNS CH'KD, NOTE BOOK NO., BY, DATE

HIGHWAY FEDERAL AID SHEET
PLATE 1-SINGLE PLAN AND PROFILE-FULL DOT
PRINTED IN U.S.A.