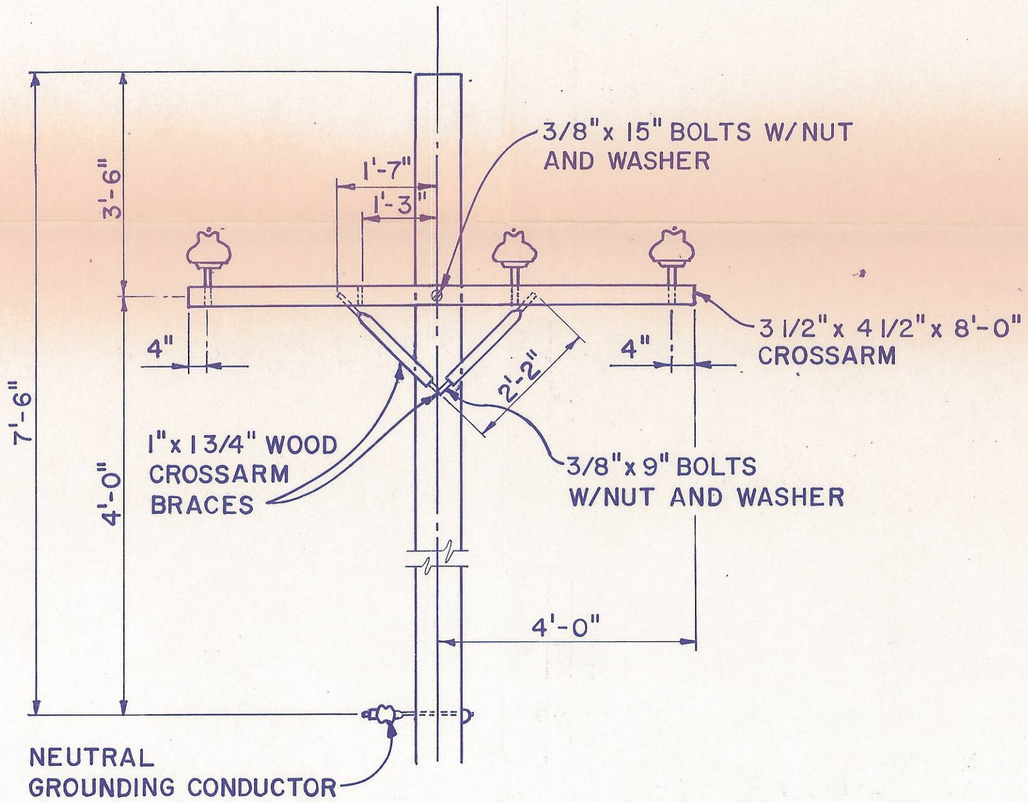

FIG. 1: FRONT VIEW

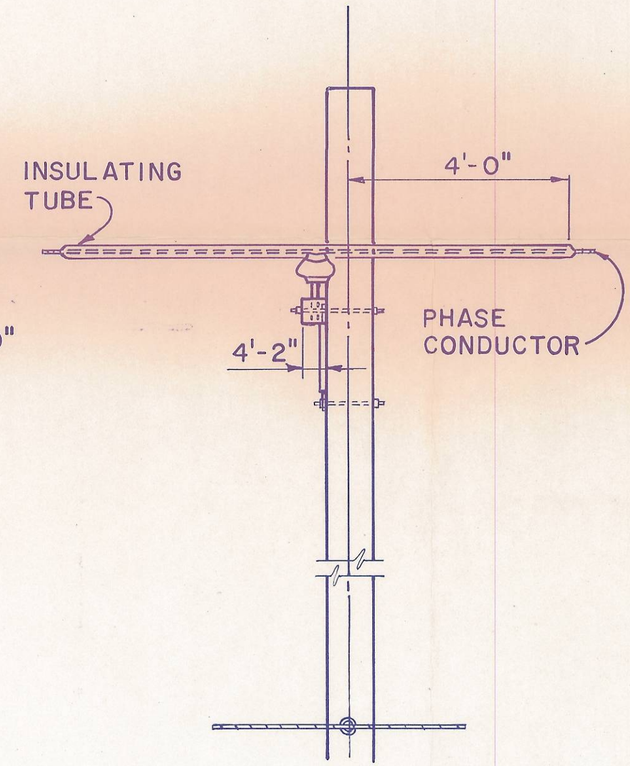

FIG. 2: SIDE VIEW

NOTE:

POLE BUTT GROUND ON EVERY 3RD OR 4TH POLE AND ONLY GOES UP THE POLE TO THE NEUTRAL GROUNDING CONDUCTOR.

RECEIVED
SEP 05 1990
DIVISION OF
OIL, GAS & MINING

CONSOLIDATION COAL COMPANY
MIDCONTINENT REGION
12755 OLIVE BLVD. ST. LOUIS, MO. 63141

RAPTOR PROTECTION ON A TYPICAL 8KV CLASS, 3 PHASE POWER POLE

MINE EMERY		DATE 4/90	
CHKD. R. J. D.		SCALE 1/2"=1'-0"	
APPD. W. J. D.		DRAWING NO. IX-1	REV.
DRAWN J. M. B.	SHEET OF		

ERVIN ANDERSON
062-0038535
REGISTERED PROFESSIONAL ENGINEER OF ILLINOIS

Ervin Anderson 9/14/90