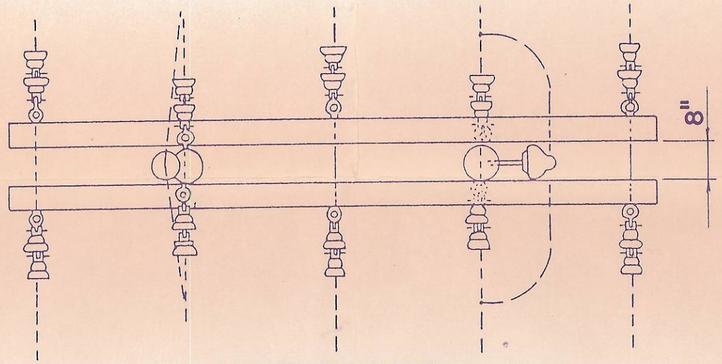

TOP VIEW

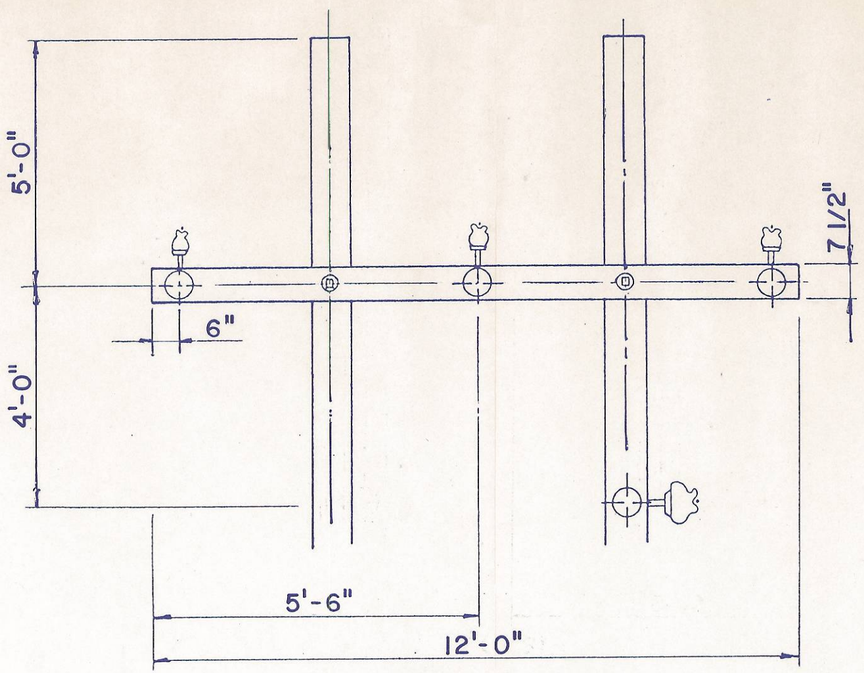

FRONT VIEW

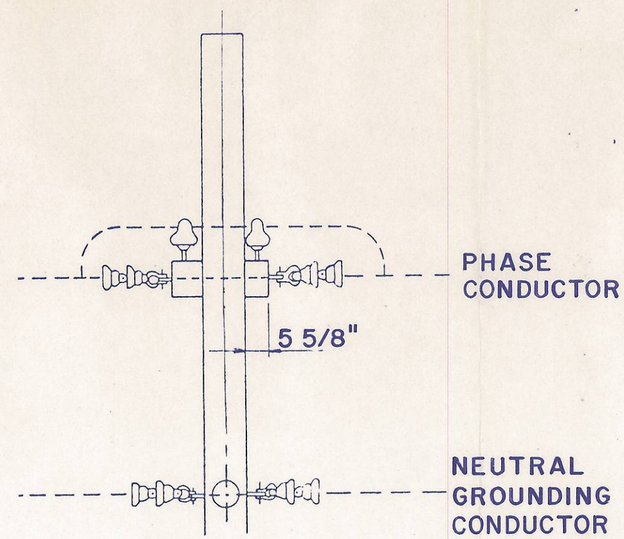

SIDE VIEW

NOTE:
POLE BUTT GROUND ON EVERY
3RD OR 4TH POLE.

RECEIVED
SEP 05 1990
DIVISION OF
OIL, GAS & MINING

CONSOLIDATION COAL COMPANY
MIDCONTINENT REGION
12755 OLIVE BLVD. ST. LOUIS, MO. 63141

POWER LINE
H-STRUCTURE
3 PHASE, 8KV

MINE EMERY		DATE 4/90	
CHKD. R.J.D.		SCALE NO SCALE	
APPD. W.J.D.		DRAWING NO. IX-3	REV.
DRAWN J.M.B.	SHEET OF		

ERVIN ANDERSON 062-0038535 REGISTERED PROFESSIONAL ENGINEER OF ILLINOIS

Ervin Anderson 9-4-90