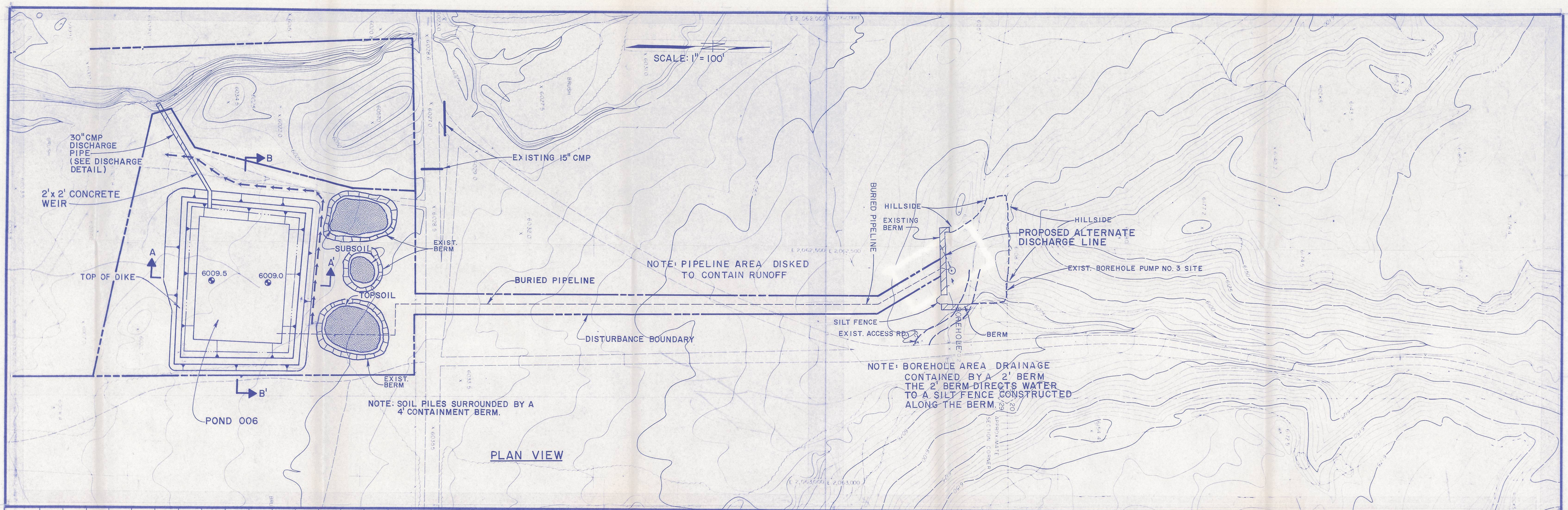

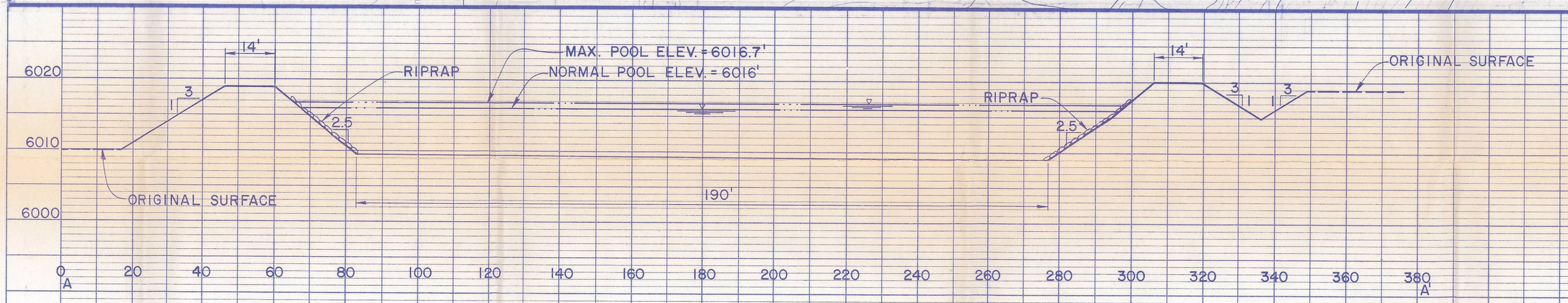

SECTION A-A'
SCALE: 1" = 10' VERT.
1" = 20' HORIZ.

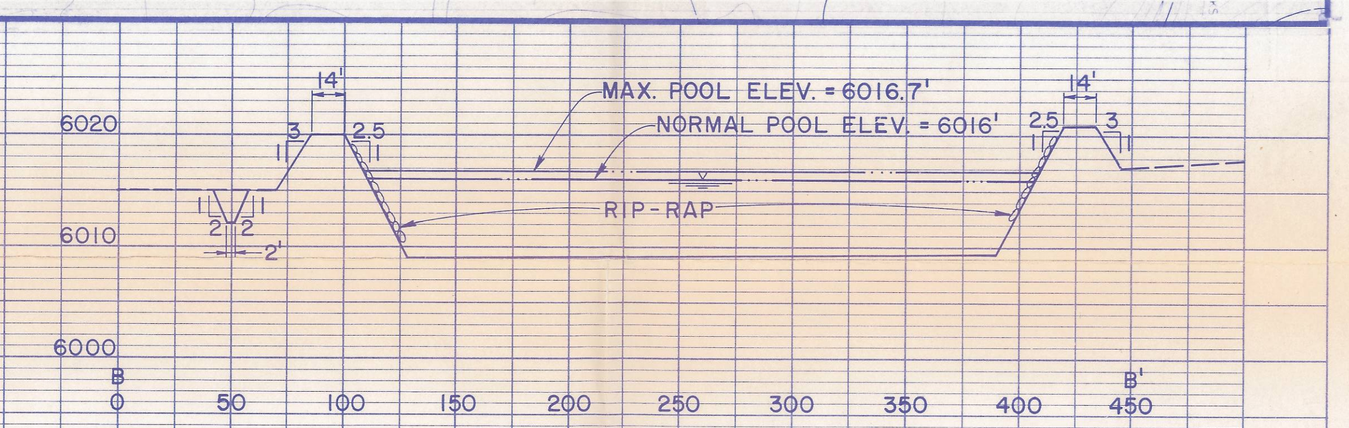

SECTION B-B'
SCALE: 1" = 10' VERT.
1" = 50' HORIZ.

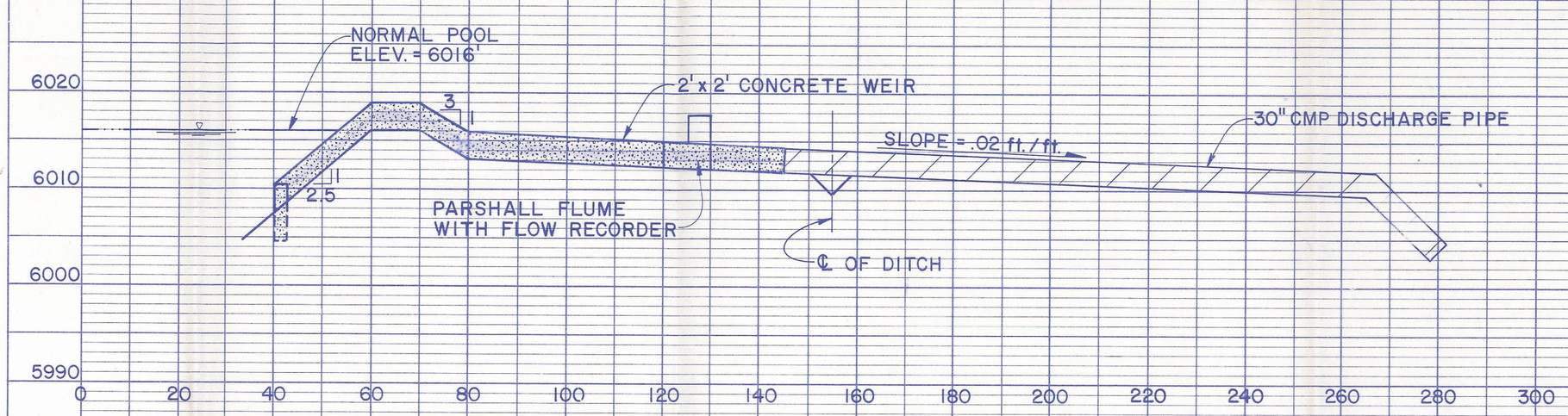

DISCHARGE DETAIL
SCALE: 1" = 10' VERT., 1" = 20' HORIZ.

INCORPORATED
EFFECTIVE:
MAR 1 1994
UTAH DIVISION OIL, GAS AND MINING

NO.	SUB. DATE	APPD. DATE	REV. BY	REVISION DESCRIPTION
1	2/94		C.D.P.	DIVISION ORDER NO. 93B

CONSOLIDATION COAL COMPANY
MIDCONTINENT REGION
12755 OLIVE BLVD. ST. LOUIS, MO. 63141

POND NO. 6
PLAN VIEW & CROSS SECTIONS

MINE	EMERY	DATE	5/90
CHKD.	C.D.P.	SCALE	AS NOTED
APPD.		DRAWING NO.	PLATE VI-18
DRAWN	A.B.B.	SHEET OF	REV.

PLAN — NOTE BOOK No. — SURVEYED — PLOTTED — ALIGNMENT CHECKED — RT. OF WAY CHECKED — BY — DATE

PROFILE — NOTE BOOK No. — SURVEYED — PLOTTED — GRADES CHECKED — B. M.'s NOTED — STRUCTURE NOTATIONS CHECKED — BY — DATE

HIGHWAY FEDERAL AID SHEET
PLATE 1-SINGLE PLAN AND PROFILE-FULL LINE
TELEDYNE
PRINTED IN U.S.A.

RECEIVED
MAR 25 1994