PLAN VIEW

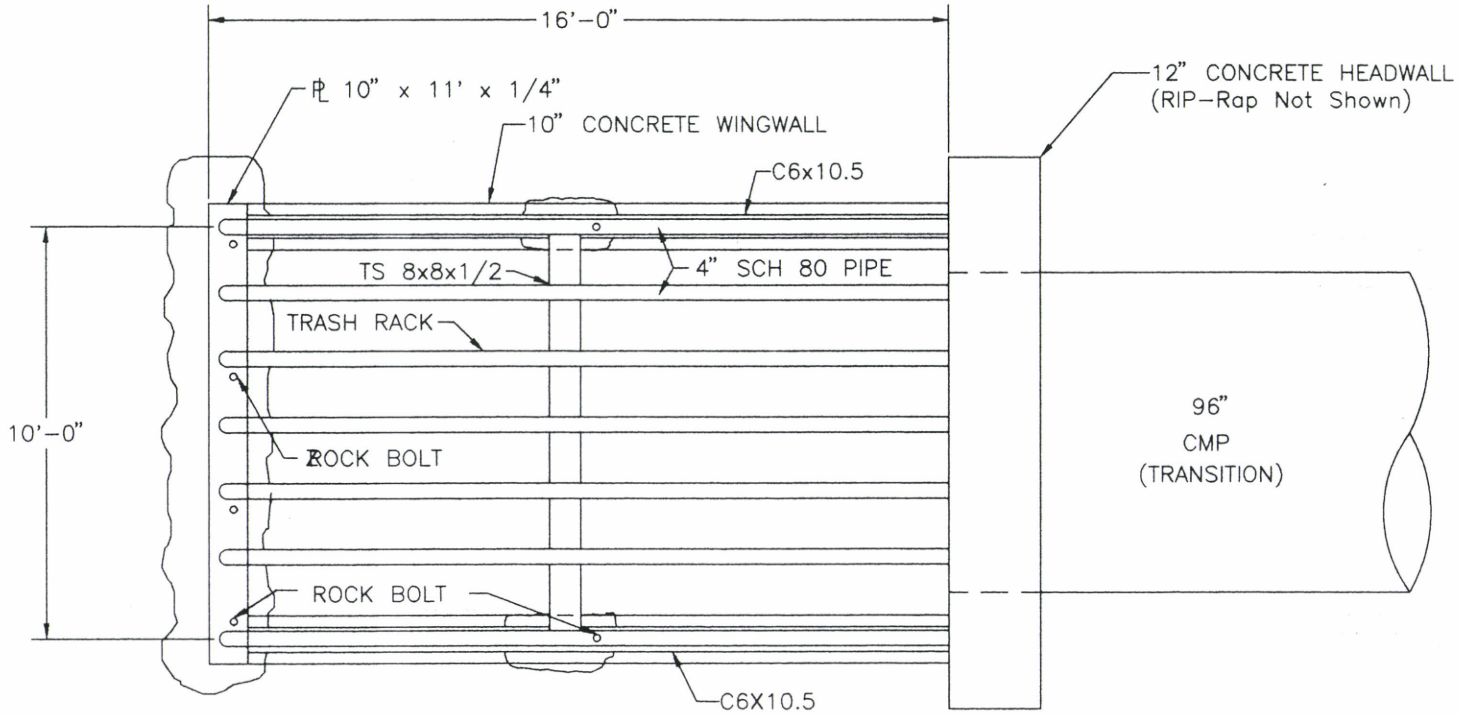

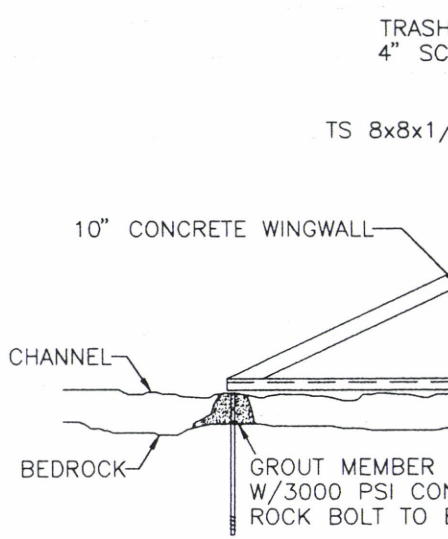

INCORPO
EFFEC
AUG 3
UTAH DIVISION O
PRICE F