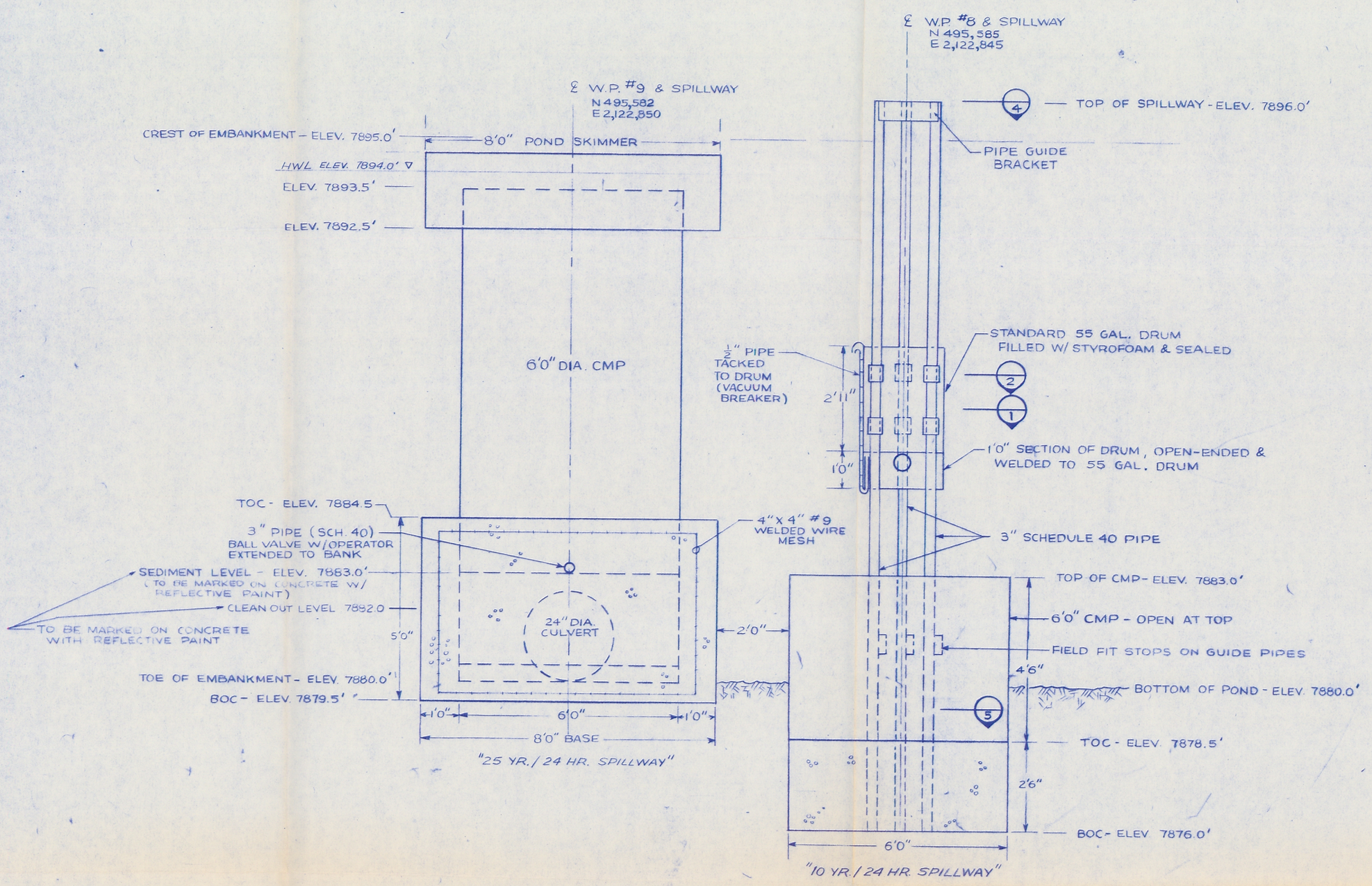

PRINCIPAL & EMERGENCY SPILLWAY
ELEVATION VIEW
SCALE: 1" = 2.0'

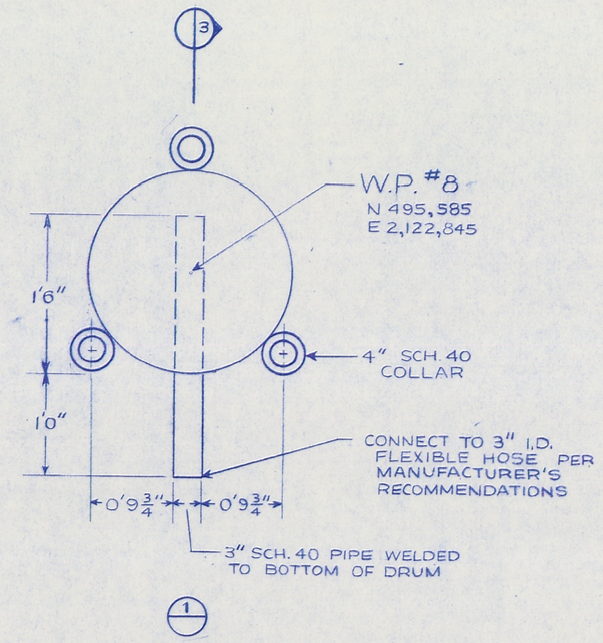

PLAN VIEW OF
SPILLWAY FLOAT
SCALE: 1" = 1.0'

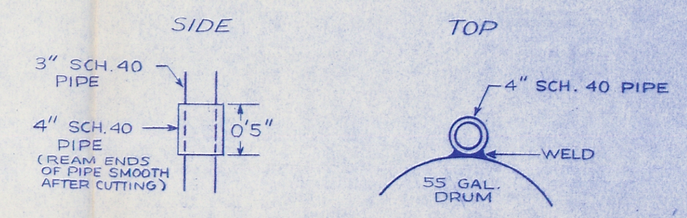

2

COLLAR DETAILS
NO SCALE

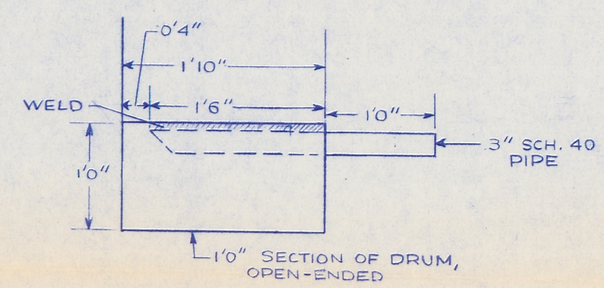

3

FLOAT SECTION
SCALE: 1" = 1.0'

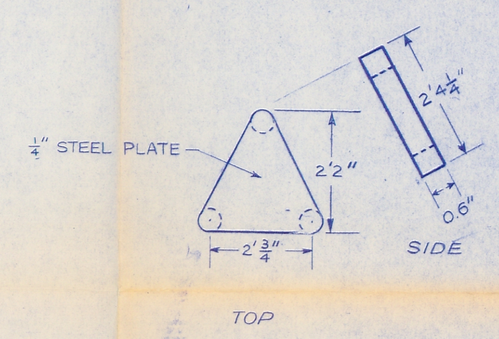

4

GUIDE BRACKET DETAIL
SCALE: 1" = 2.0'

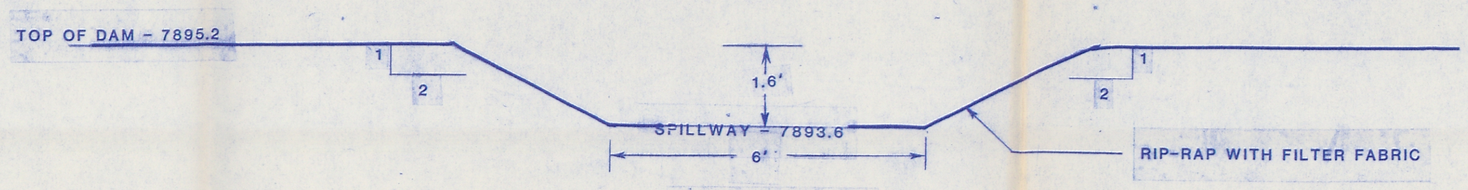

(PROPOSED)
OPEN SPILLWAY CHANNEL
ELEVATION VIEW
SCALE: 1":2'

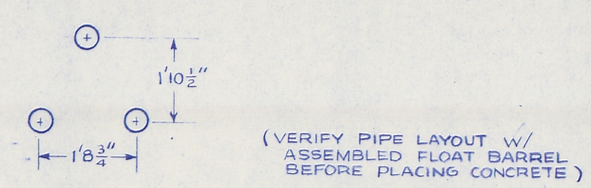

5

GUIDE PIPE LAYOUT
SCALE: 1" = 2.0'

REV. 10-25-91
REV. 5-8-86
REVISED 8/9/85

10/25/91
5/8/86
10/2/91

BEAVER CREEK COAL COMPANY

POND No. 2
SPILLWAY DETAILS

Scale:	Date:	Design By:	Drawn By:
AS NOTED	JUNE/1985	CHP	KRL

A C Z INC.
ENGINEERING AND ENVIRONMENTAL DIVISION
STEAMBOAT SPRINGS, CO 80477

Drawing Number: 7-8b