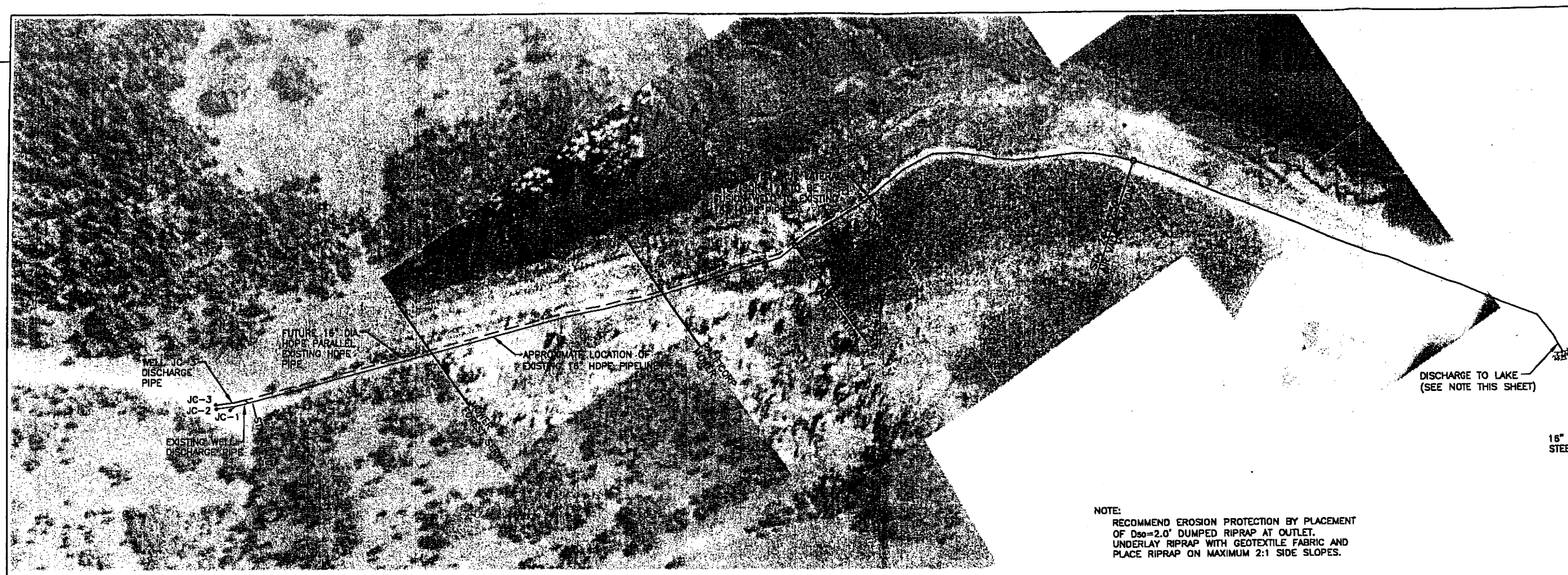

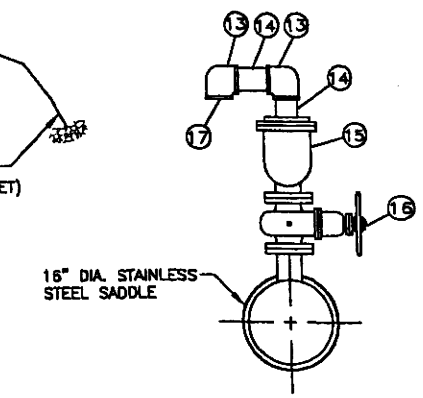

NOTE:
RECOMMEND EROSION PROTECTION BY PLACEMENT OF D50=2.0' DUMPED RIPRAP AT OUTLET. UNDERLAY RIPRAP WITH GEOTEXTILE FABRIC AND PLACE RIPRAP ON MAXIMUM 2:1 SIDE SLOPES.

4" AIR VAC DETAIL A
N.T.S.
(SEE VALVE AND FITTING SCHEDULE SHHET C-2)

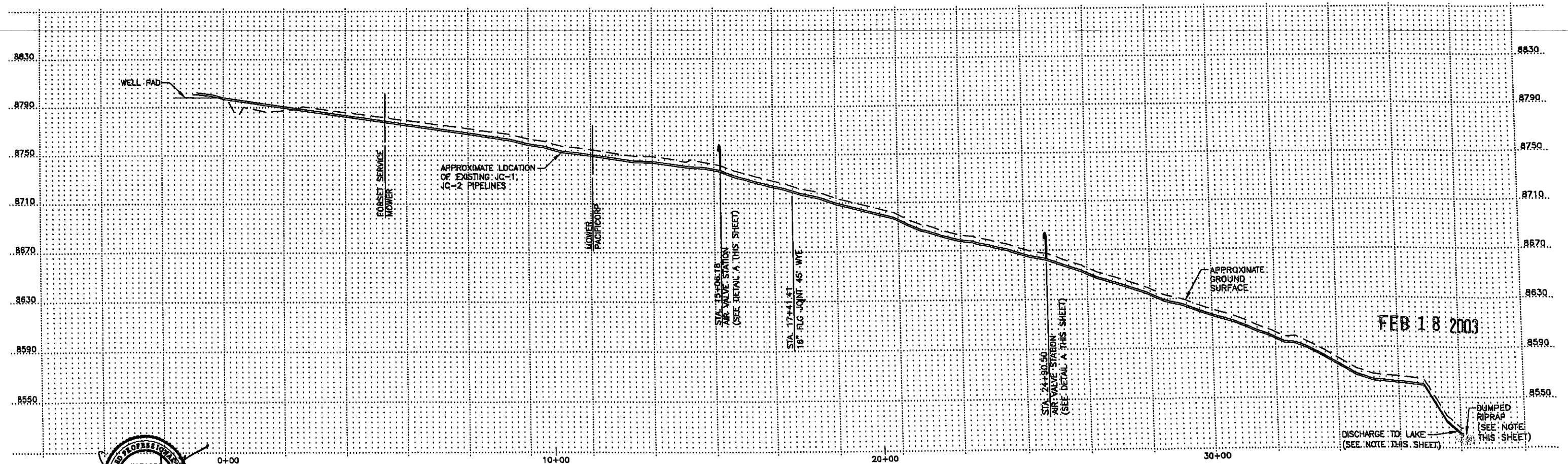

FEB 18 2003

FILE NAME: 005\13-130\CADFILES\PIPE LINE PROFILE.DWG
FILE DATE: 2.14.2003 10:38:45 (CAH)

HANSEN ALLEN & LUCE inc ENGINEERS

PROJECT ENGINEER

DESIGNED MPW	2				
DRAFTED MPW	1				
CHECKED DEH	0		RELEASE FOR CONSTRUCTION		
DATE FEBRUARY 2003	NO.	DATE	REVISIONS	BY	APVD.

SCALE

VERIFY SCALE
0" 1"
BAR IS ONE INCH ON ORIGINAL DRAWING. IF NOT ONE INCH ON THIS SHEET, ADJUST SCALES ACCORDINGLY.

PACIFICORP

JAMES CANYON WELL JC-3
PUMP AND PIPING
LOCATION & DETAILS OF NEW JC-3 PIPELINE

SHEET NO. C-4 OF 4
005.13.13