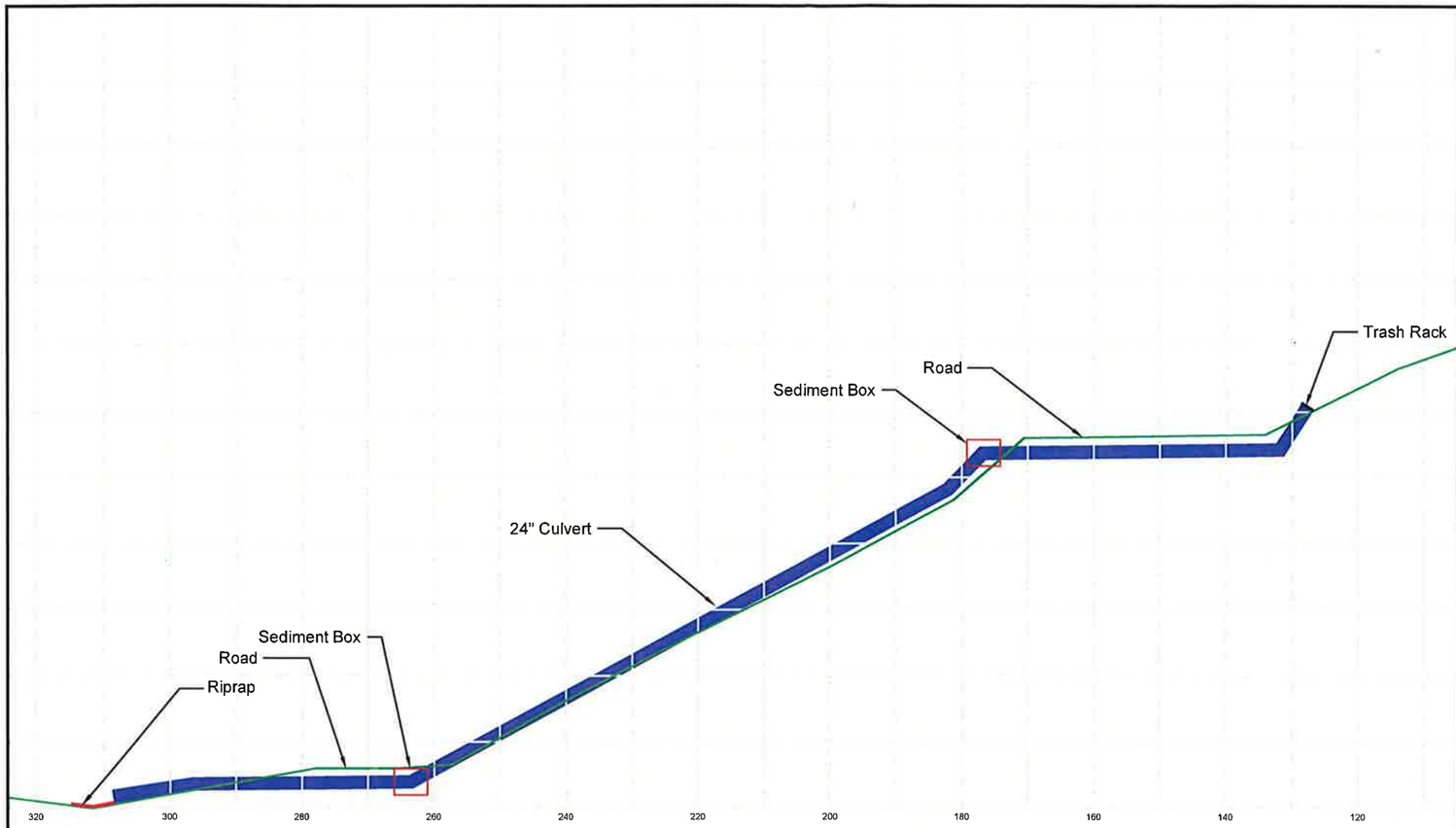

Outlet Riprap Design

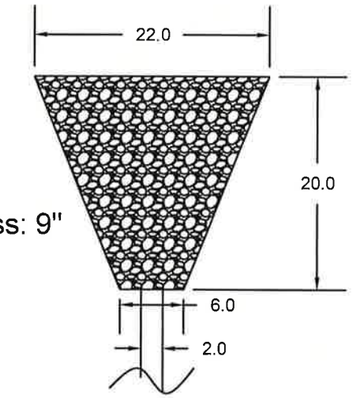

6" D50
Minimum Thickness: 9"

RECEIVED
OCT 30 2015
DIV. OF OIL, GAS & MINING

Concrete Sediment Box

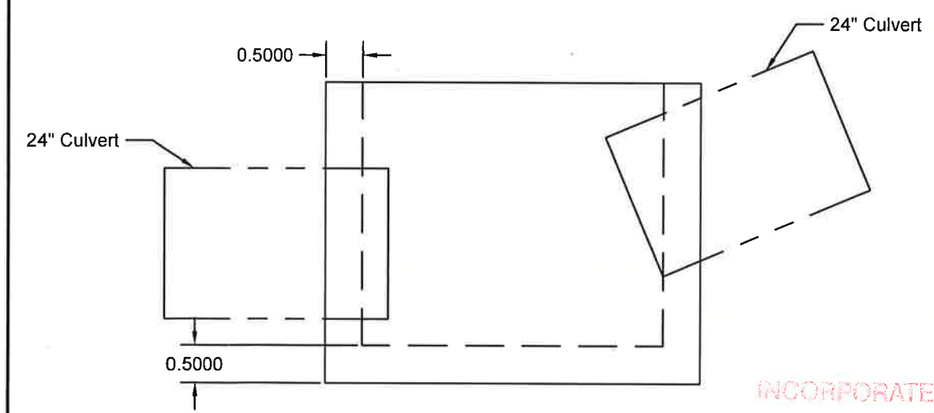

INCORPORATED
NOV 02 2015
Div. of Oil, Gas & Mining

REGISTERED PROFESSIONAL ENGINEER
No. 8781250-2202
CRAIG WILLIAM BROWN
STATE OF UTAH

Waste Rock Site
Culvert and Riprap
Design

Canyon Fuel Company, LLC
Skyline Mines

HCR 35 BOX380, HELPER, UT, 84526 435-448-2832	DATE: 09/09/15	CK.BY: JArmstrong	REVISION: 0 09/09/15
DWG. NO.: 3.2.8-1a	SCALE: NST	DR.BY: BBAILEY	
CAD FILE: P:\PERMITS\SKY\WORKING\2015_WRS_culvert\3.2.8-1a			