COAL HANDLING SCHEMATIC DIAGRAM
3.5mm TON/YEAR SYSTEM

SCALE:NONE DATE:2/9/94 DRAWN BY: RYON PRICE

INCORPORATED
EFFECTIVE:
MAR 9 1994
UTAH DIVISION OIL GAS AND MINING

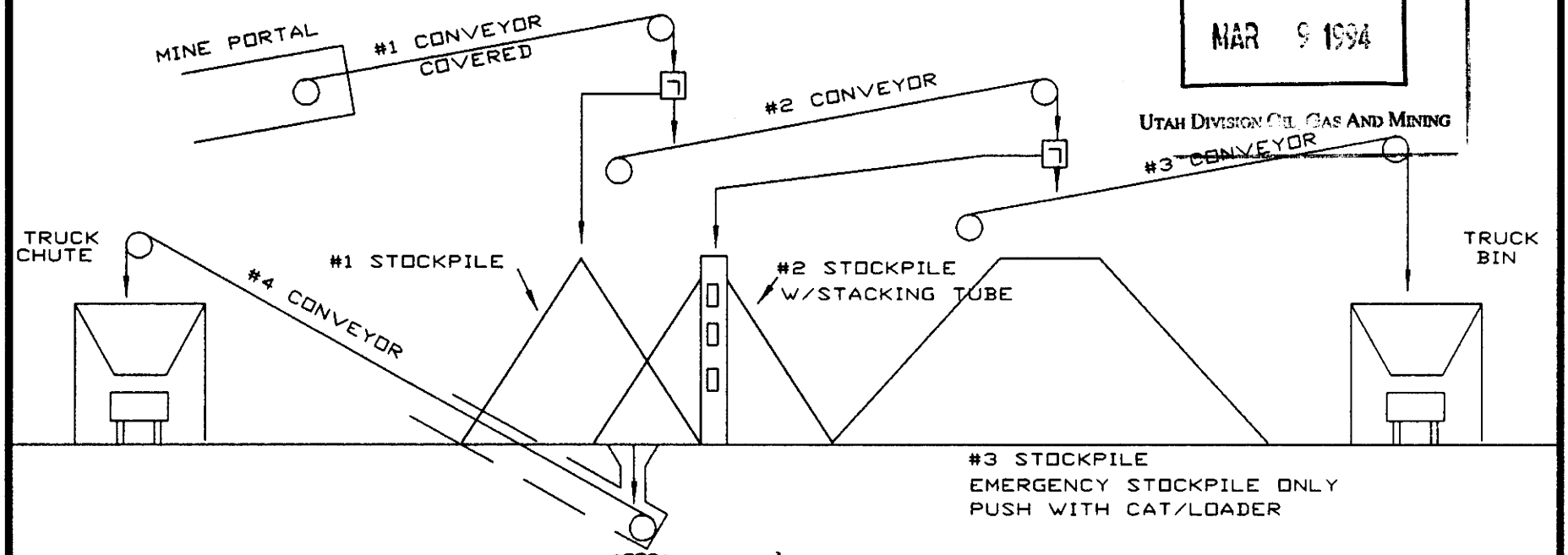

EXHIBIT 5.21-1C

SOLDIER CREEK COAL COMPANY

a subsidiary of
THE COASTAL CORPORATION

LICENSED PROFESSIONAL ENGINEER
No. 151610
DAVID G. SPILLMAN
STATE OF UTAH

I, being a professional engineer hereby certify that this map was prepared by me or under my direct supervision and that all information contained thereon is true and correct to the best of my knowledge and information.

FACILITY DETAIL

FACILITY	MAX. THROUGHPUT TONS/YEAR	CAPACITY TONS
#1 CONVEYOR	3,500,000	N/A
#2 CONVEYOR	2,900,000	N/A
#3 CONVEYOR	1,750,000	N/A
#4 CONVEYOR	1,750,000	N/A
#1 STOCKPILE	600,000	3,000
#2 STOCKPILE	1,150,000	5,000
#3 STOCKPILE	100,000	7,000
TRUCK CHUTE	1,750,000	0
TRUCK BIN	1,750,000	600

H:\DRAWINGS\COAL Mon Feb 28 11:13:53 1994