DRAWING NO.
1312A101

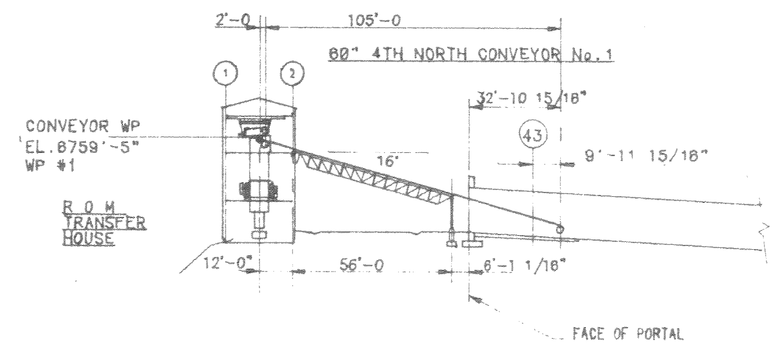

4TH NORTH MINE PORTAL TO R O M TRANSFER

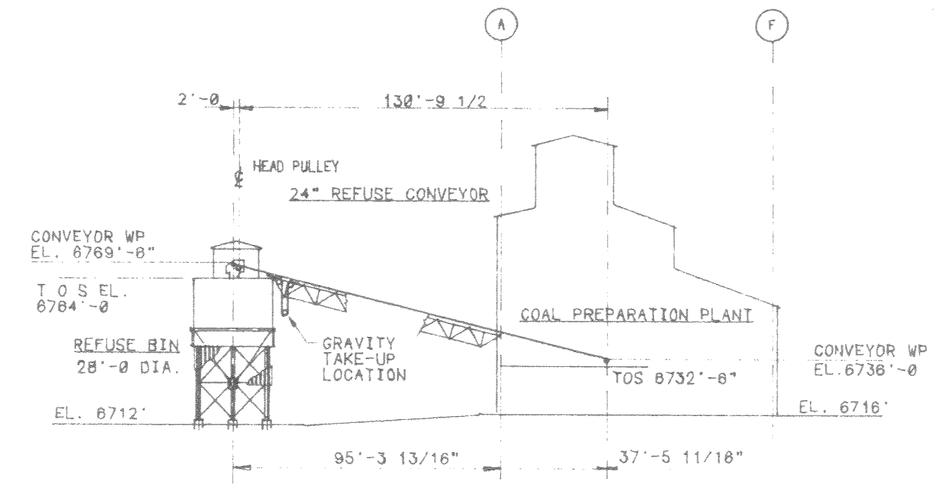

COAL PREPARATION PLANT TO REFUSE BIN

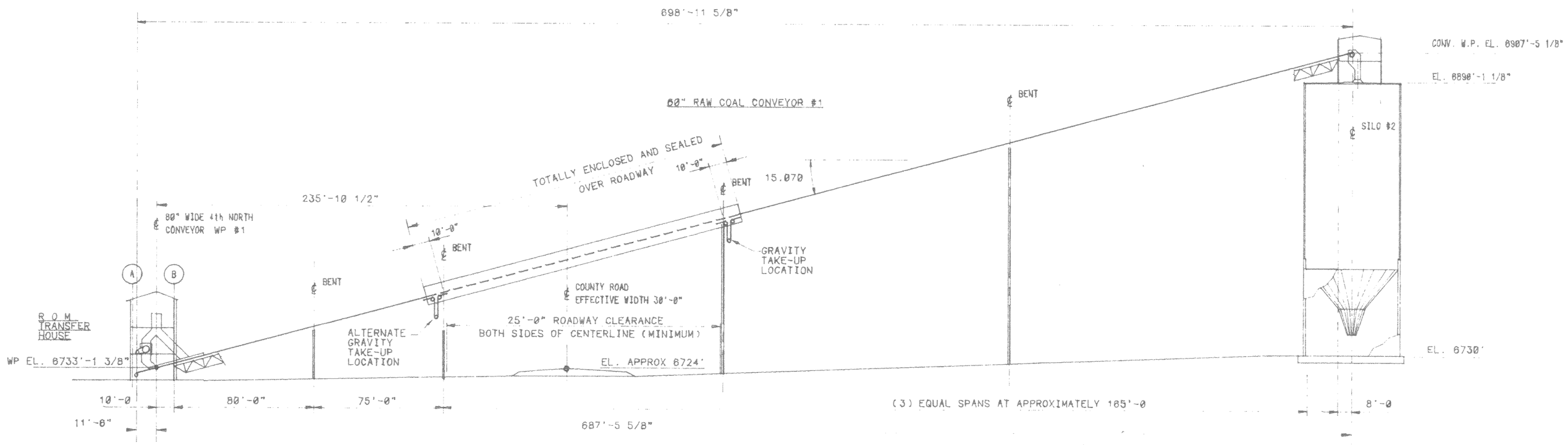

RAW COAL TRANSFER TO STORAGE SILO

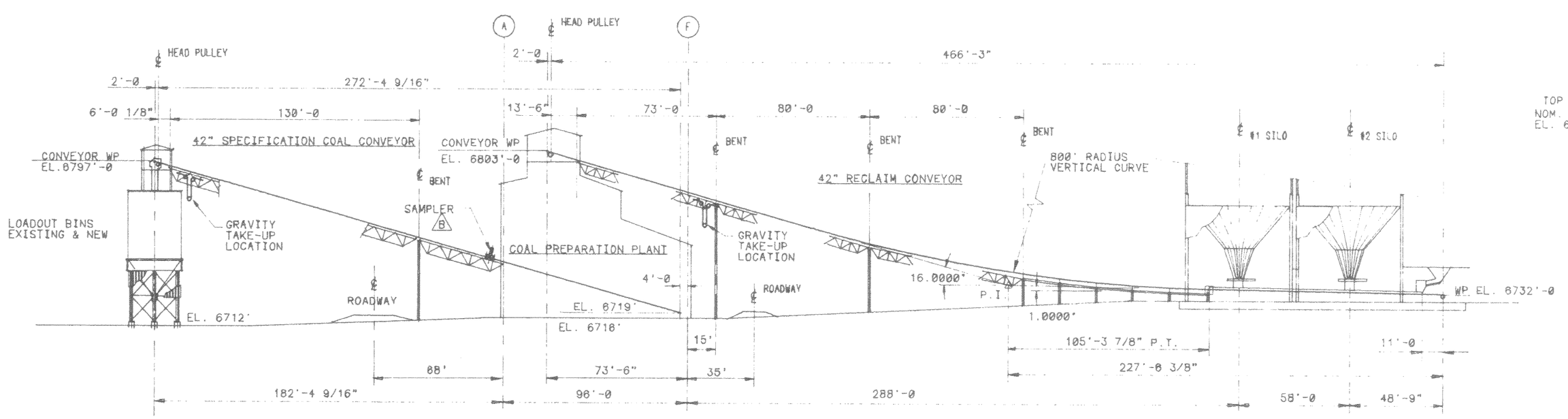

STORAGE SILO TO COAL PREPARATION PLANT TO LOADOUT BINS

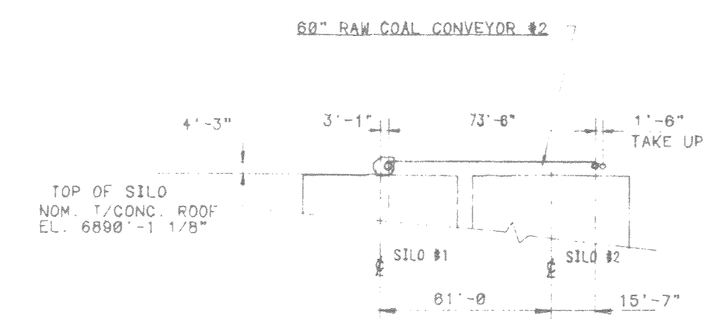

RAW COAL TRANSFER
TO SILO #1

INCORPORATED
EFFECTIVE:
DEC
UTAH DIVISION OIL, GAS AND MINING

RECEIVED
MAR 29 1993
DIVISION OF
OIL GAS & MINING

Registered Professional Engineer
No. 4863
J. KEITH
PALUCH
State of Utah

I, being a professional engineer hereby certify that this map was prepared by me or under my direct supervision and that all information contained thereon is true and correct to the best of my knowledge and information.

SUBMITTED
MAR 31 1993

FILE COPY

VOLUME 1

FIGURE 5.26

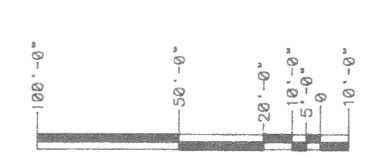

Soldier Creek Coal Company
SOLDIER CANYON MINE

REF. DWG. NO.	TITLE	REV.	REF. DWG. NO.	TITLE	REV.
1312-A-100	SITE PLAN				

	REVISION	DATE	APPROVAL	DATE
H				
J				
K				
L				
M				
N				
P				

	REVISION	DATE	APPROVAL	DATE
A	GEN.REV./ISSUED FOR CONVEYOR BID	2/13/91	MS	
B	ADD SAMPLER, 4TH NORTH CONVEYOR	8/28/91	MS	
C				
D				
E				
F				
G				

NorWest
RESOURCE CONSULTANTS, INC.
Calgary Salt Lake City Cincinnati

PROJECT	MINE SURFACE FACILITIES	PROJECT NO. 90-1312	ISSUED
LOCATION	SOLDIER CANYON MINE	DESIGNED BY	DRAWN BY MS
CUSTOMER	SOLDIER CREEK COAL COMPANY	DATE	DATE 1/15/91
		CHECKED BY	APPROVED BY
TITLE	CONVEYOR PROFILES	DATE	DATE
		DRAWING NO. 1312-A-101	SCALE N.T.S. REV. B

9-10-91