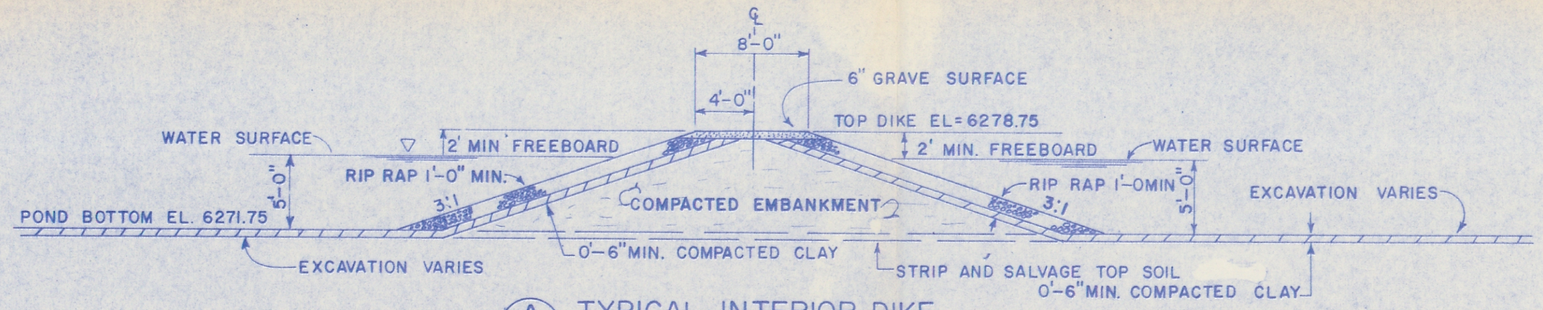

A TYPICAL INTERIOR DIKE SECTION
1"=8'-0"

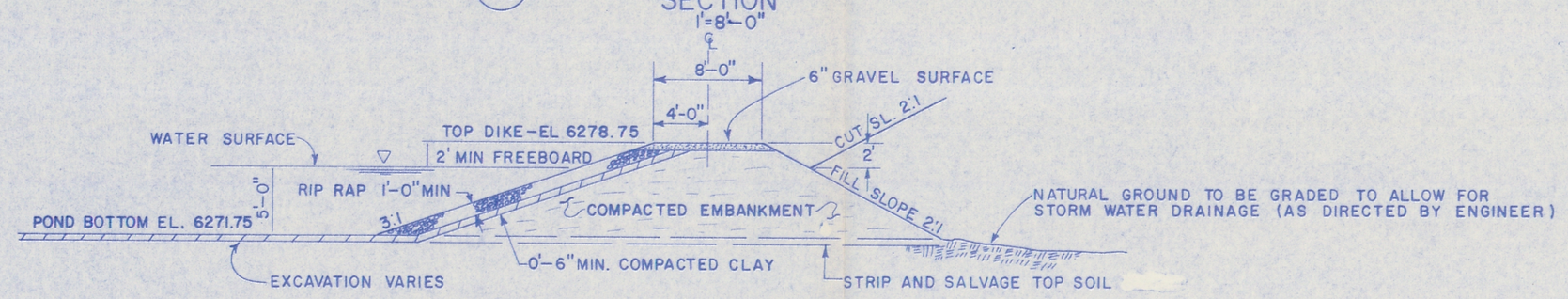

B TYPICAL EXTERIOR DIKE SECTION
1"=8'-0"

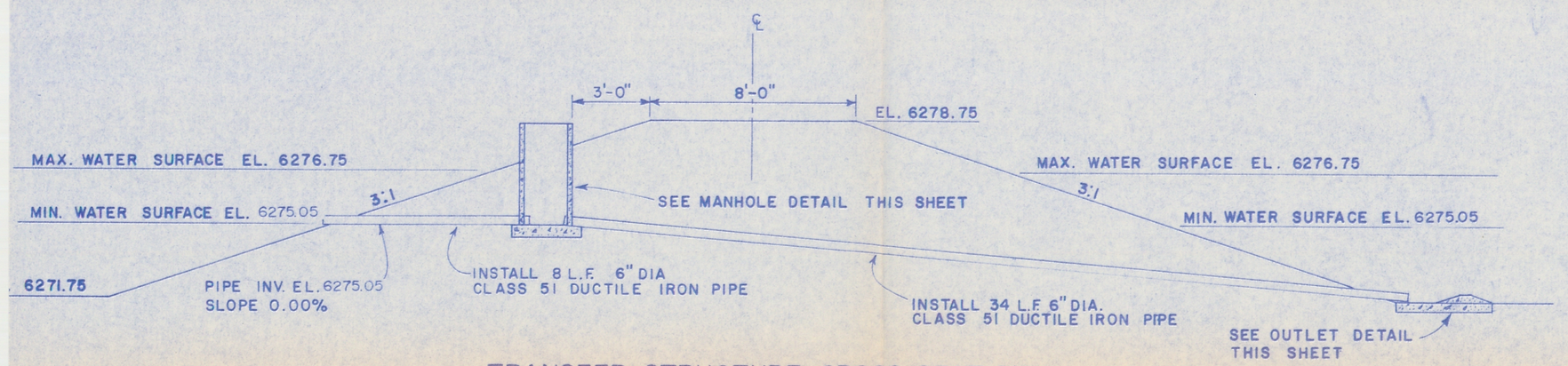

TRANSFER STRUCTURE CROSS SECTION
1"=4'-0"

MANHOLE NO. 5

4'x48" DIA. PRECAST MANHOLE SECTION HAVING A FLAT LID WITH ACCESS HOLE TO BE ECCENTRIC.

ACCESS HOLE LID SHALL BE STANTARD SEWER MANHOLE SIZE BUT SHALL BE ALLUMINUM FOR EASE IN REMOVAL FOR VALVE ADJUSTMENTS

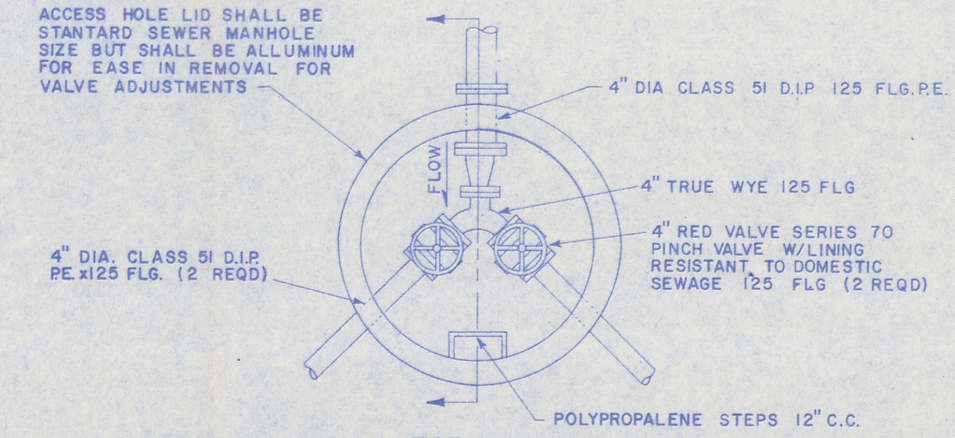

TOP VIEW
1"=2'-0"

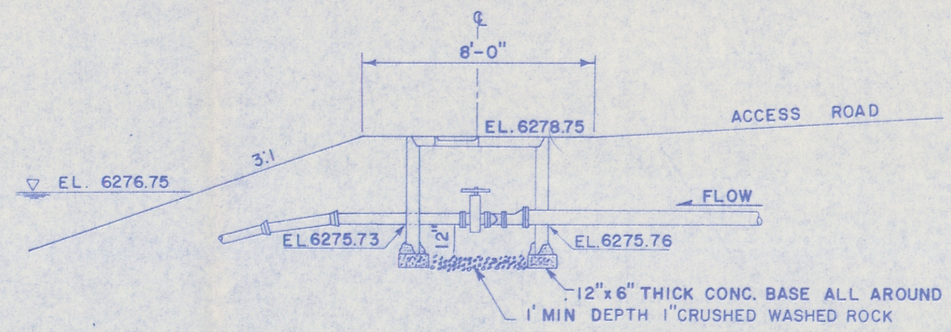

SECTION
1"=4'-0"

FLOW CONTROL STRUCTURE

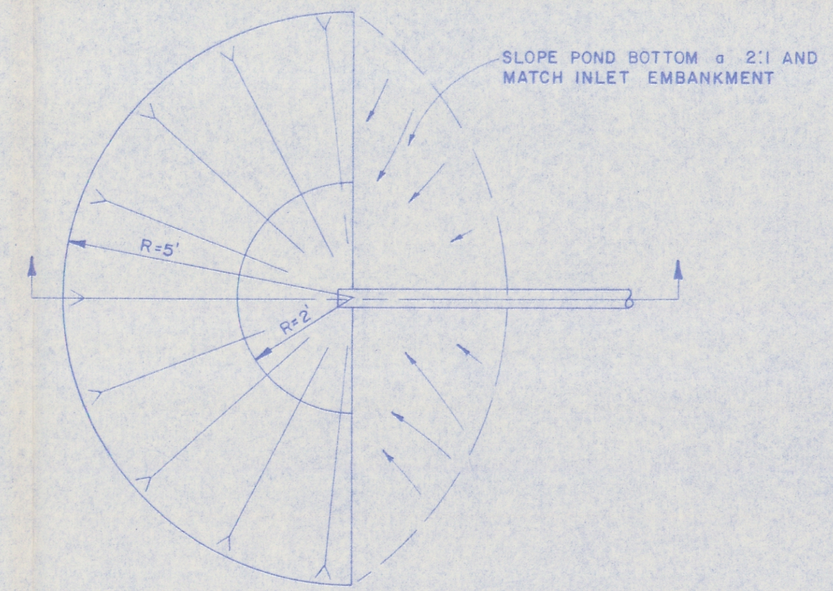

TOP VIEW

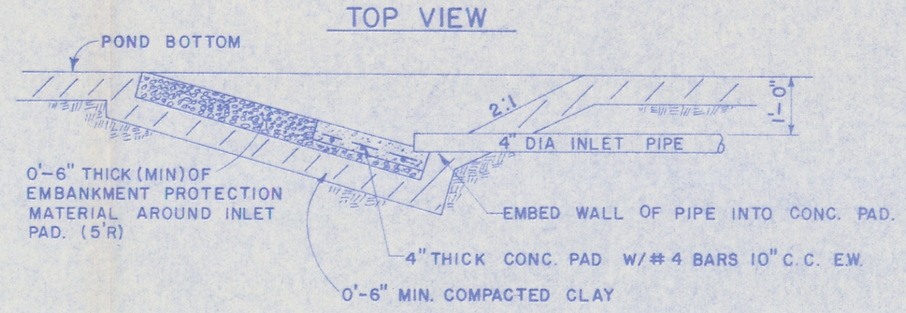

SECTION

INLET PAD DETAIL
1"=2'-0"

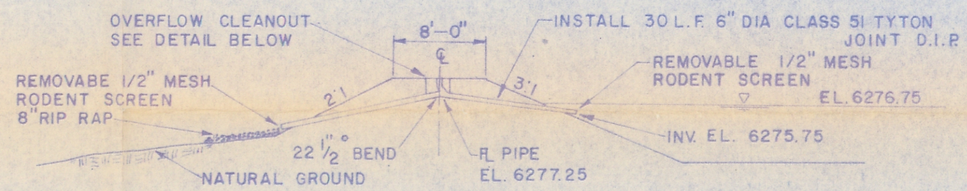

LAGOON OVERFLOW SECTION
1"=10'-0"

RECEIVED
OCT 1 1 1991
DIVISION OF OIL GAS & MINING

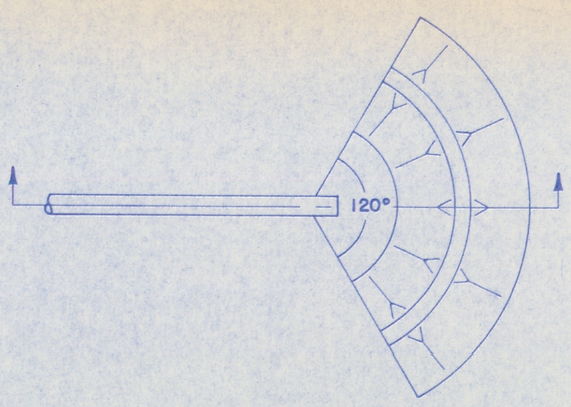

PLAN

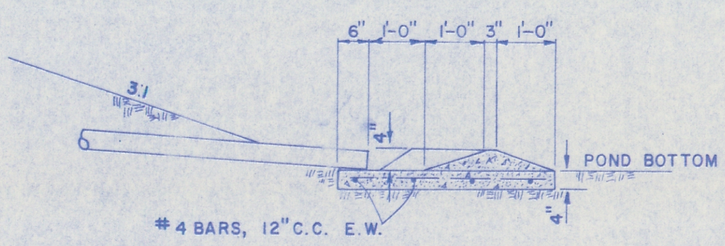

SECTION

TRANSFER STRUCTURE OUTLET
1"=2'-0"

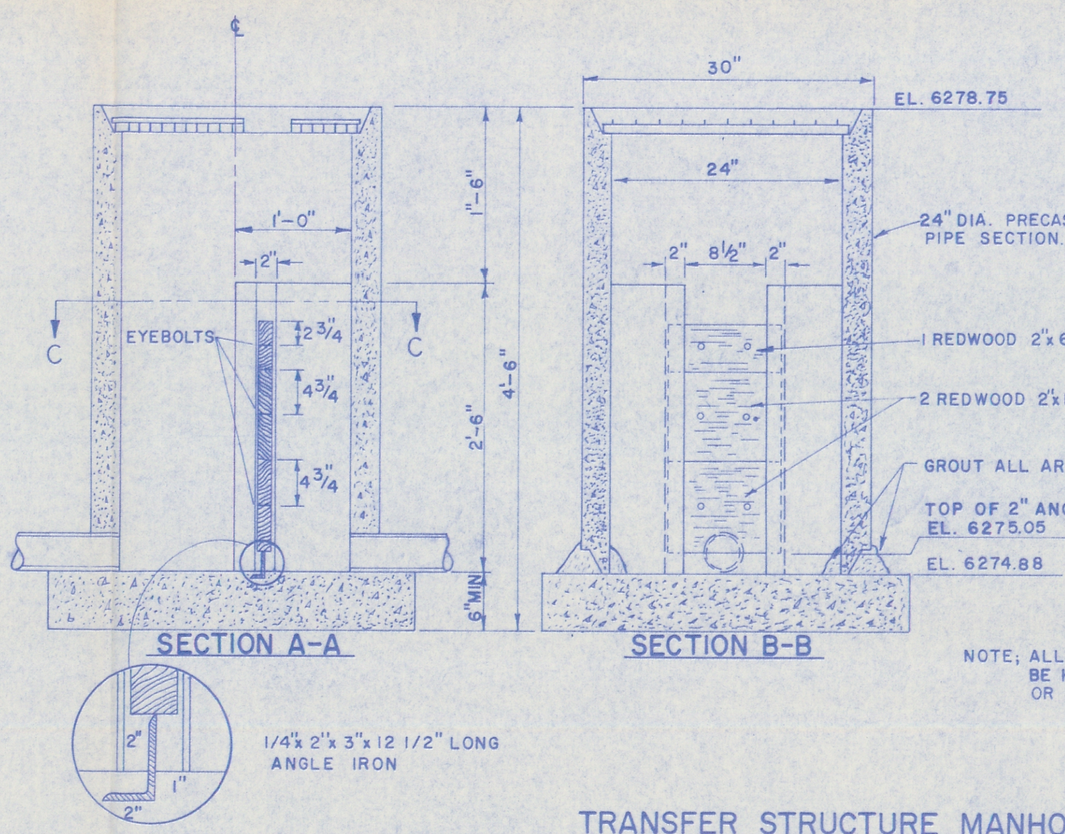

SECTION A-A

SECTION B-B

1/4"x 2"x 3"x 12 1/2" LONG ANGLE IRON

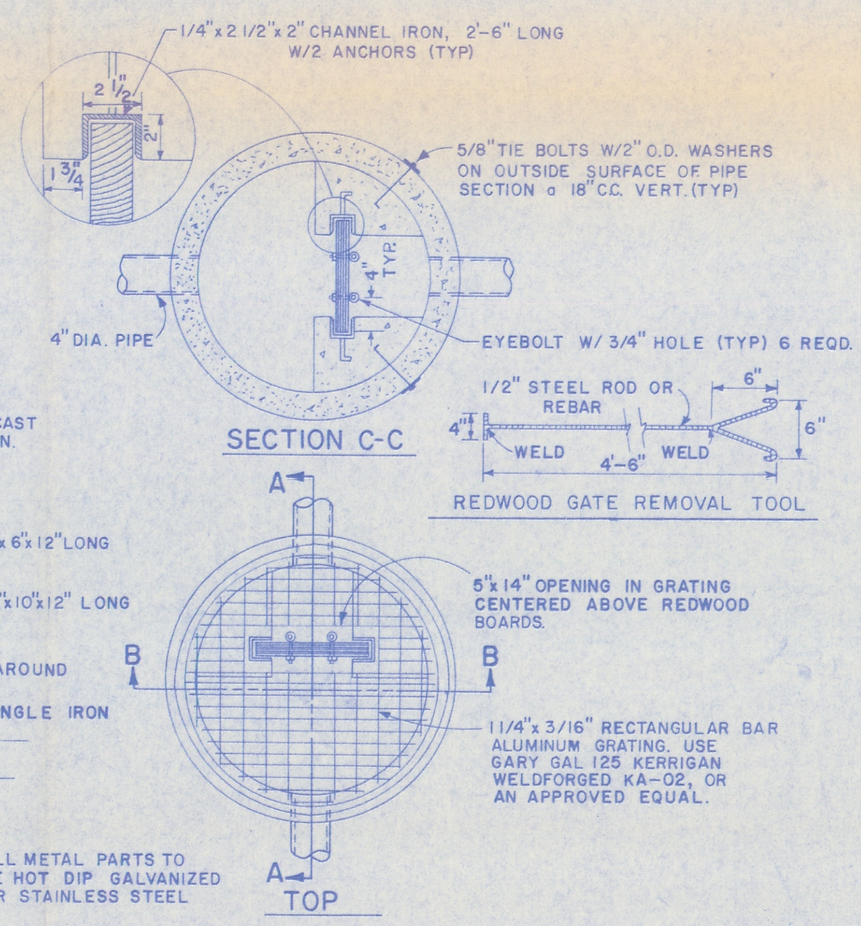

SECTION C-C

TOP

REDWOOD GATE REMOVAL TOOL

NOTE; ALL METAL PARTS TO BE HOT DIP GALVANIZED OR STAINLESS STEEL

TRANSFER STRUCTURE MANHOLE DETAIL
1"=1'-0"

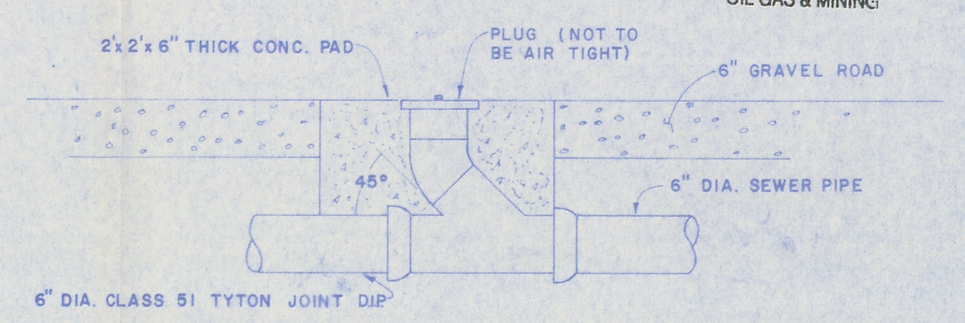

LAGOON OVERFLOW CLEANOUT DETAIL
1"=1'-0"

VOLUME 6

FILE COPY

Registered Professional Engineer No. 4028 THOMAS E. ... State of Utah

I, being a professional engineer hereby certify that this map was prepared by me or under my direct supervision and that all information contained thereon is true and correct to the best of my knowledge and information.

HORROCKS & CAROLLO ENGINEERS
A JOINT VENTURE
1 West Main Street
AMERICAN FORK, UTAH 84003

SOLDIER CREEK COAL - WASTEWATER

LAGOON DETAILS

Designed	Checked	Date		Drawing No.	Sheet
LFB		4/14/82		E 022	
Drawn	Traced	Revised		SH&CI	No. 10 of 12
ELS					

REVISIONS		
NO.	DATE	BY
1	10/30/85	C.W.D.
2		
3		

Soldier Creek Coal Company

SOLDIER CANYON MINE

SCALE:	TITLE:	DRAWING NO.
AS SHOWN	LAGOON DETAILS	E 022
DRAWN BY E.L.S. DATE 4/82	CHECKED / DATE / APPROVED / DATE	

EXHIBIT 5.26-3