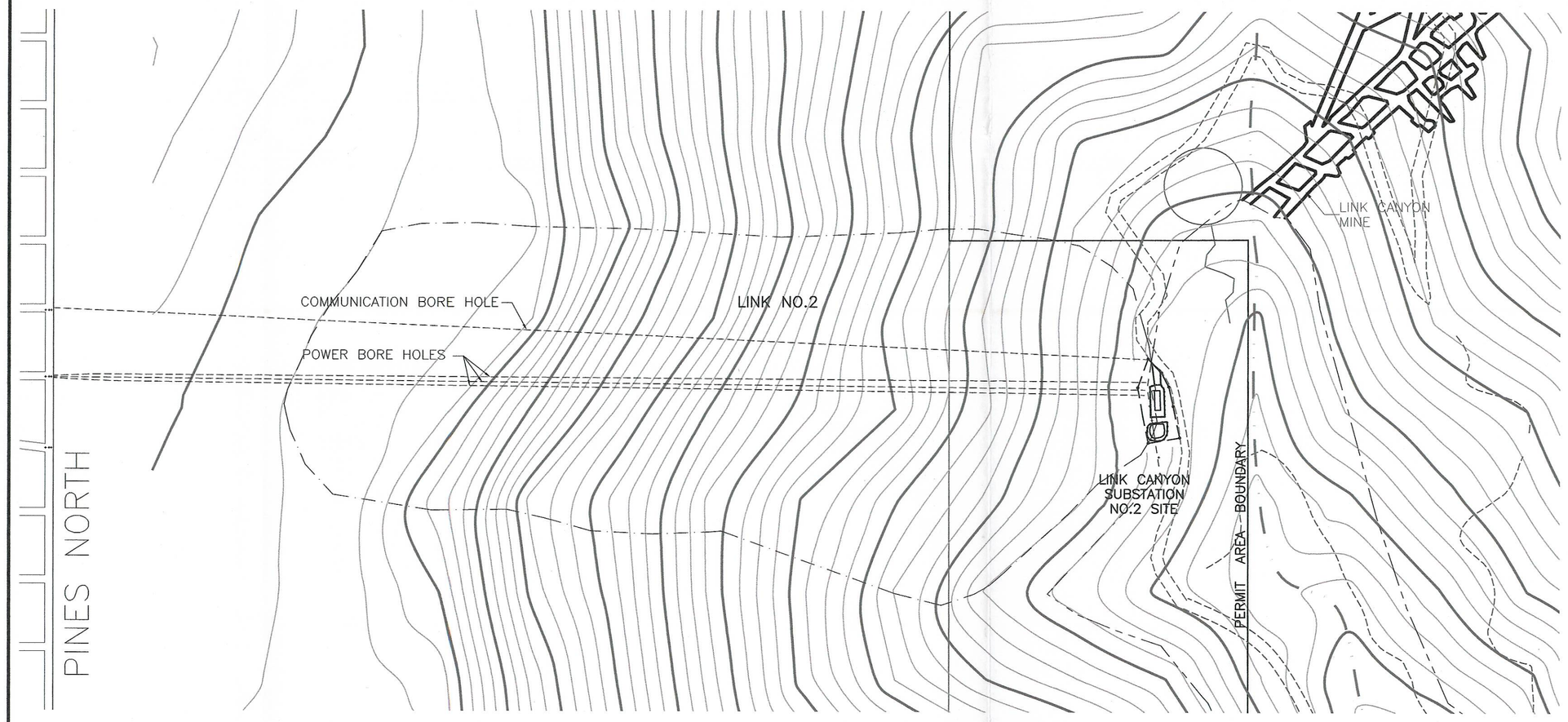

LINK CANYON SUBSTATION #2
SURFACE FACILITIES DETAIL
SCALE: 1" = 200'

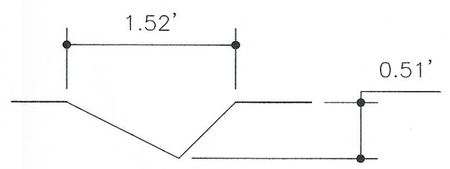

TYPICAL DITCH CROSS-SECTION
SCALE: NTS

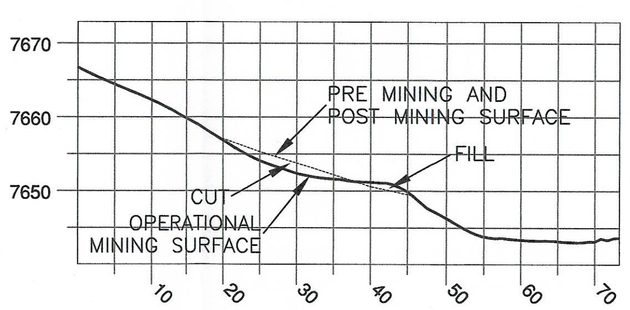

CROSS-SECTION A-A'

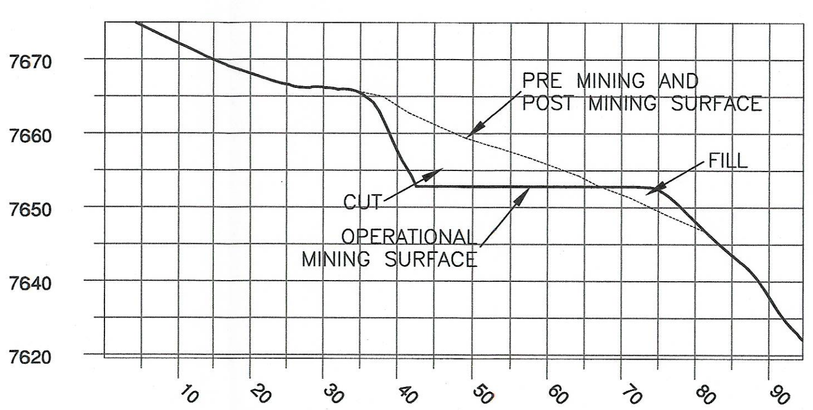

CROSS-SECTION B-B'

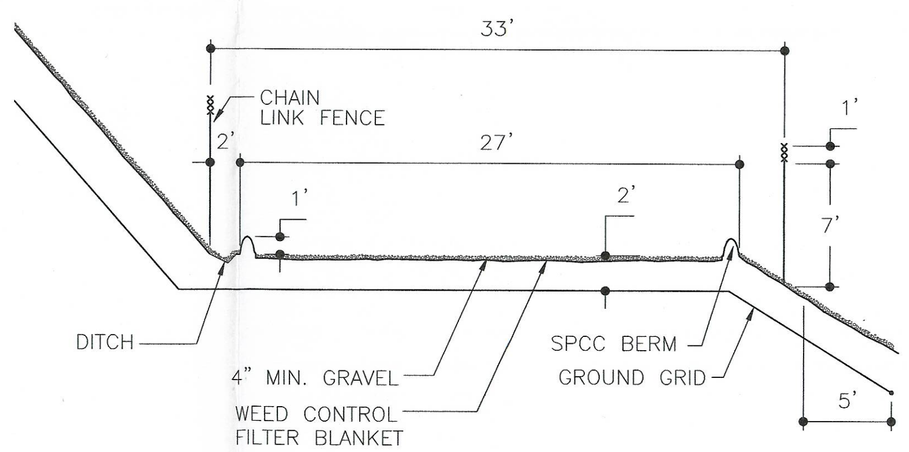

CROSS-SECTION C-C'
SCALE: NTS

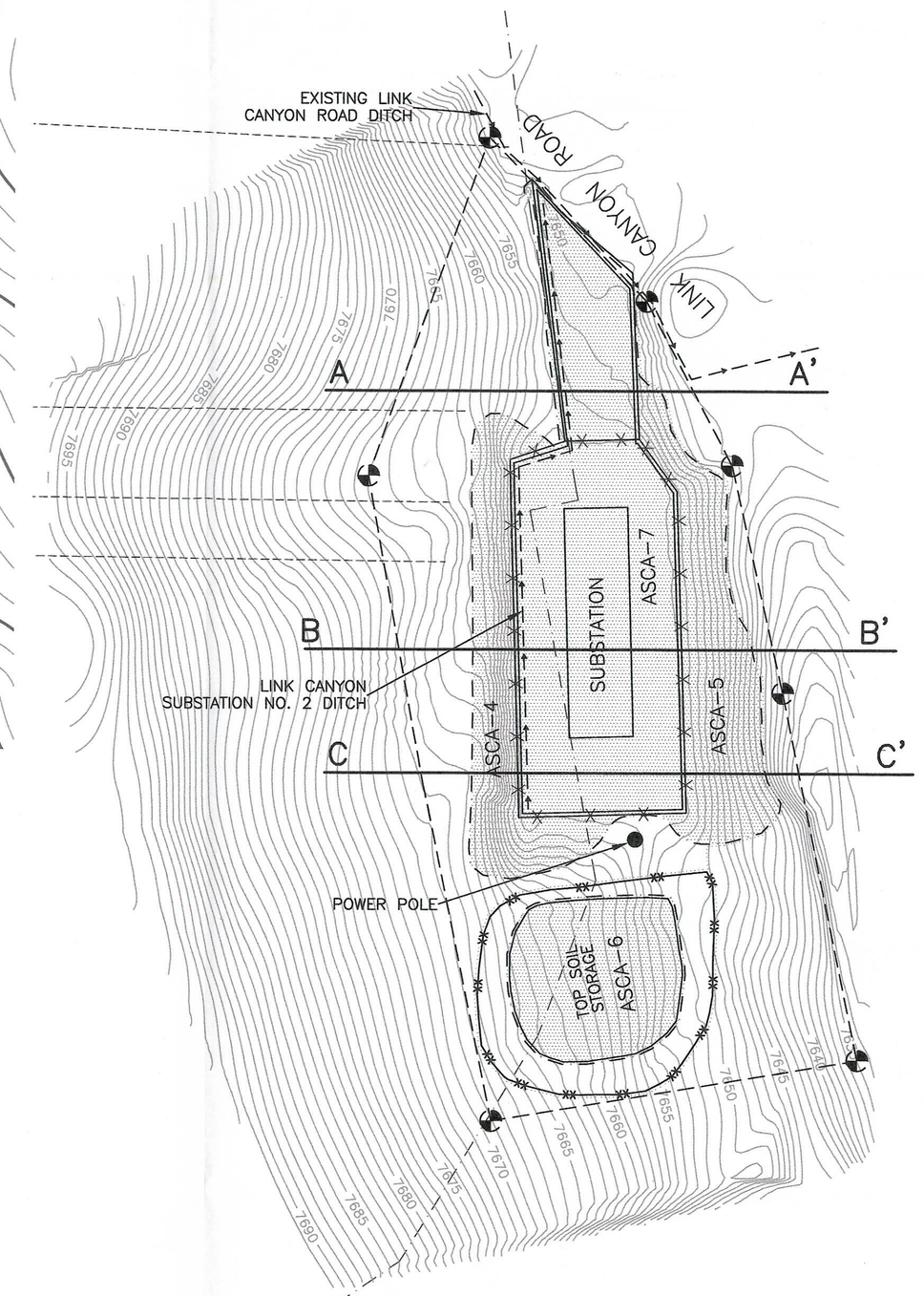

LINK CANYON SUBSTATION #2
PAD DETAIL
SCALE: 1" = 20'

DAB (0.24 ACRES)
ASCA (0.12 ACRES)

VOLUMES:
CUT: 198 CUBIC YARDS
FILL: 84 CUBIC YARDS

LINK CANYON SUBSTATION #2
PRE MINING AND POST MINING
TOPOGRAPHY
SCALE: 1" = 20'

REGISTERED PROFESSIONAL ENGINEER #334504-2202 JOHN D. BYARS STATE OF UTAH

I CERTIFY THE ITEMS SHOWN ON THIS DRAWING ARE ACCURATE TO THE BEST OF MY KNOWLEDGE

RECEIVED
JUL 21 2010
DIV. OF OIL, GAS & MINING

LEGEND

- EPHEMERAL STREAM
- OUTCROP
- LEASE BOUNDARY
- INTERIOR LEASE
- DISTURBED AREA BOUNDARY
- DISTURBED AREA BOUNDARY MARKER
- SUBSTATION CHAIN LINK FENCE
- ALTERNATE SEDIMENT CONTROL AREA (ASCA)
- WATERSHED BOUNDARY
- DIVERSION DITCH
- TOP SOIL CONTAINMENT BEAM AND/OR SILT FENCE
- TOP SOIL STOCKPILE FENCE

NOTE:
LINK CANYON SUBSTATION LOCATED IN SECTION 26, SW 1/4, T21S, R5E, SLB&M

REVISIONS				
NO.	DATE	REQ. BY	DWG. BY	REMARKS
1	02/03/00	M.L.D.	B.D.H.	
2	09/19/00	M.L.D.	B.D.H.	
3	05/24/10	M.L.D.	K.B.B.	

Canyon Fuel Company, LLC
SUFCO Mine
597 South SR 24 - Salina, UT 84654
(435) 286-4880 Phone
(435) 286-4499 Fax

DETAIL OF LINK CANYON
SUBSTATION #2 SURFACE FACILITIES

SCALE:	DATE:	DRAWN BY:	ENGINEER:	SHEET NO.
1" = 200'	11/23/1999	B.D.H.	M.L.D.	PLATE 5-2Ev3
CHECKED BY: M.L.D.	FILE NAME: H:\DRAWINGS\MRP\PLATES\PLATE 5-2Ev3.dwg			

INCORPORATED
JUN 21 2010
Div. of Oil, Gas & Mining