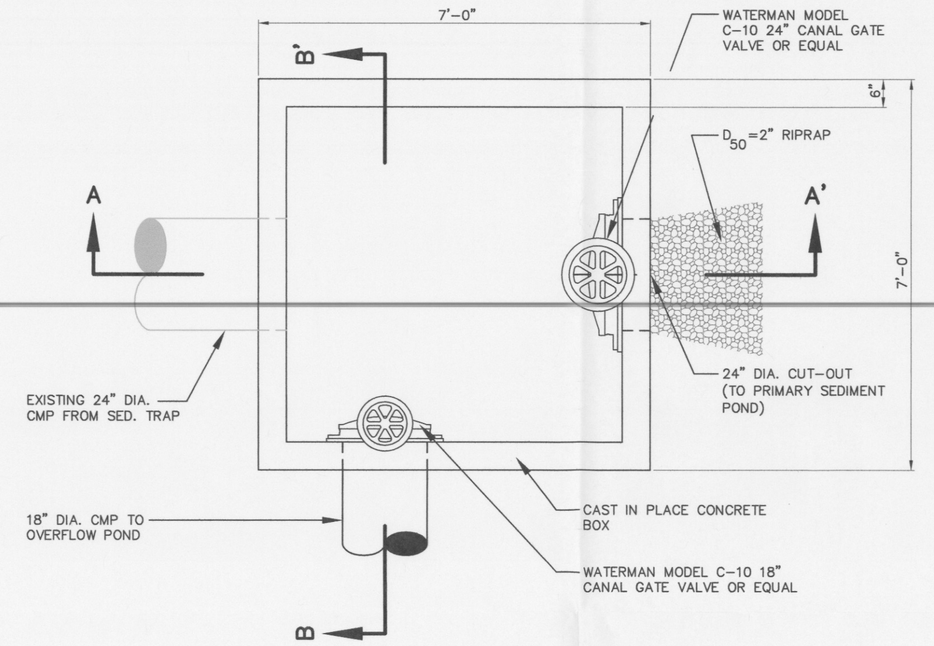

PLAN

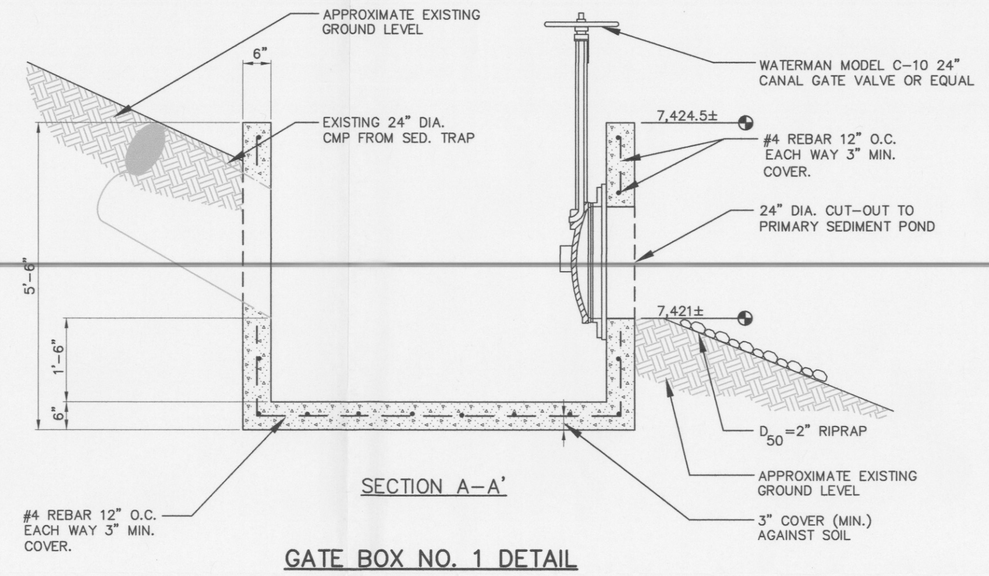

SECTION A–A'

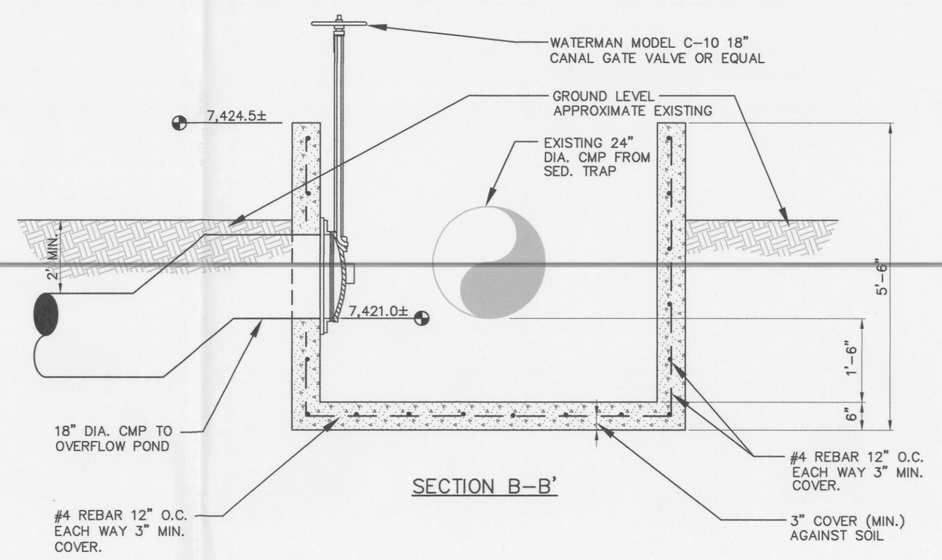

SECTION B–B'

GATE BOX NO. 1 DETAIL

NO SCALE

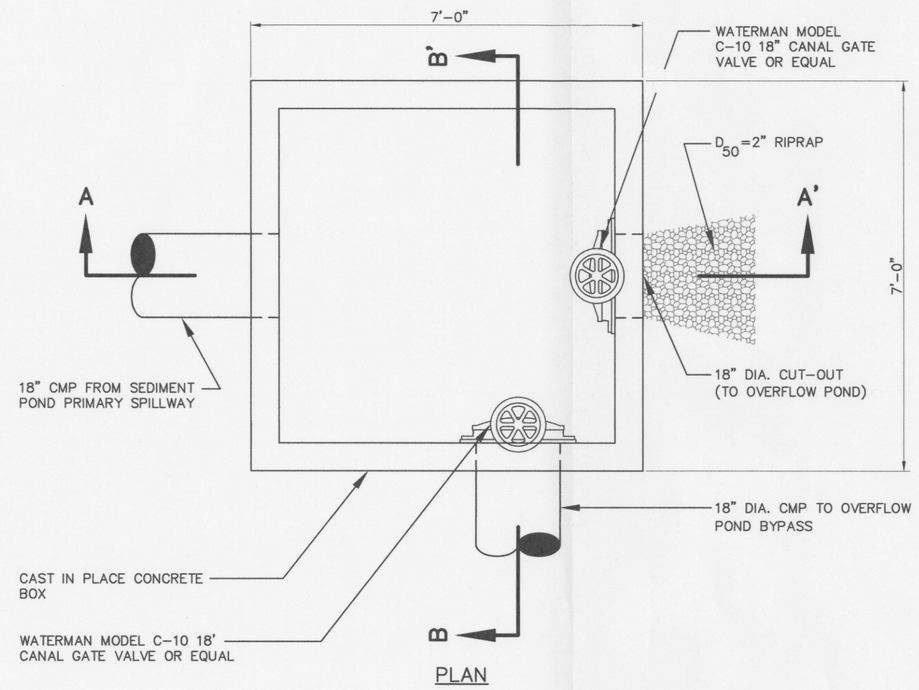

PLAN

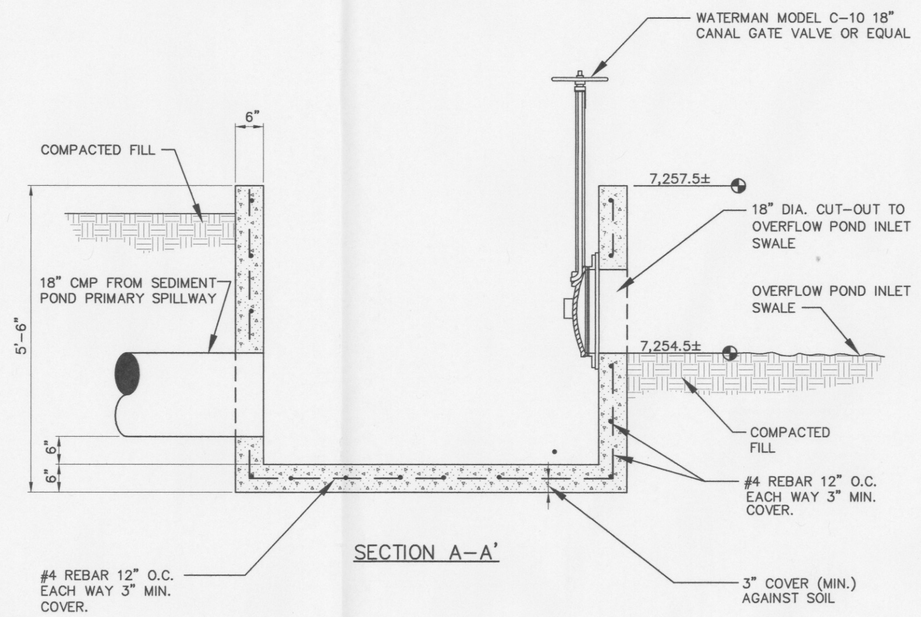

SECTION A–A'

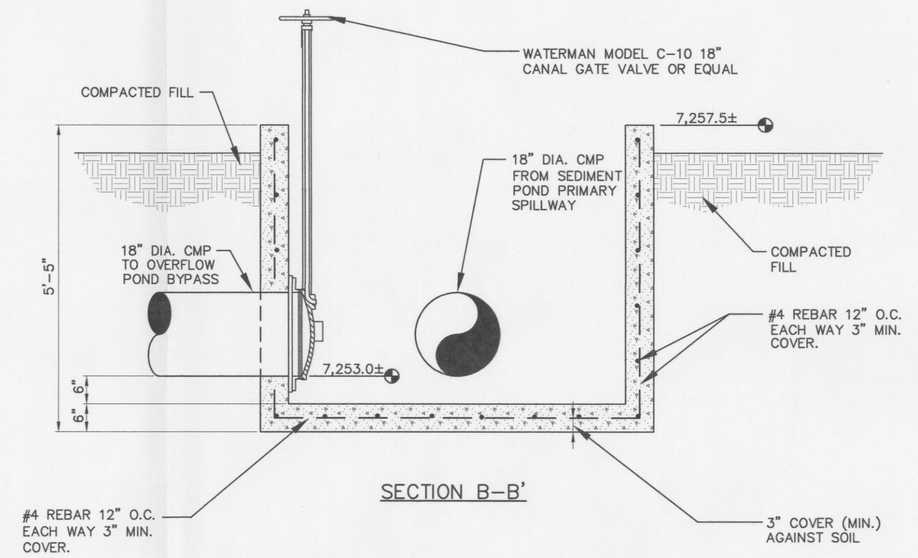

SECTION B–B'

GATE BOX NO. 2 DETAIL

NO SCALE

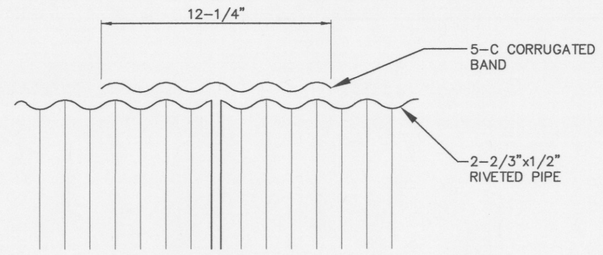

SECTION

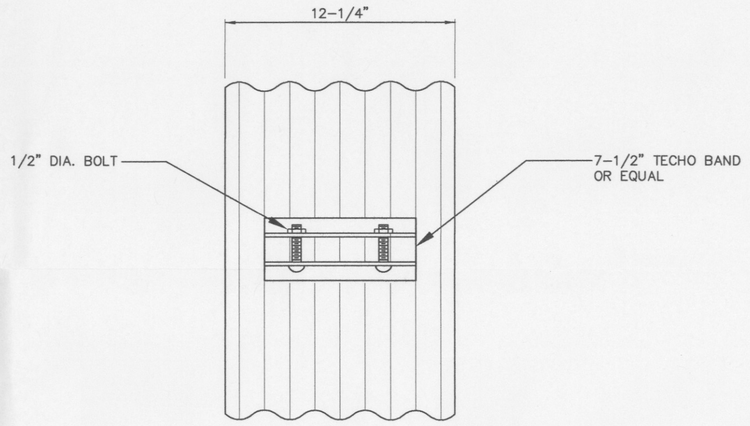

CONNECTION

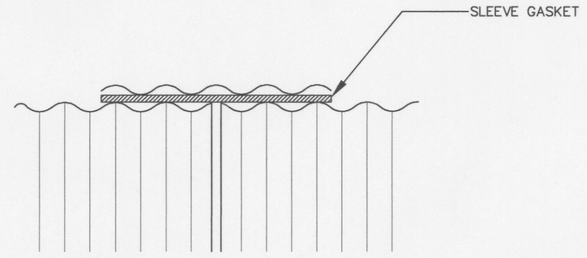

SECTION

ANCHOR NOTE:

1. BANDS ARE NORMALLY FURNISHED AS FOLLOWS:
   12" THRU 48" 1-PIECE
   54" THRU 96" 2-PIECE
2. BAND FASTENERS ARE ATTACHED WITH SPOT WELD RIVETS OR HAND WELDS.
3. DIMENSIONS ARE SUBJECT TO MANUFACTURING TOLERANCES.

CORRUGATED BAND DETAIL

NO SCALE

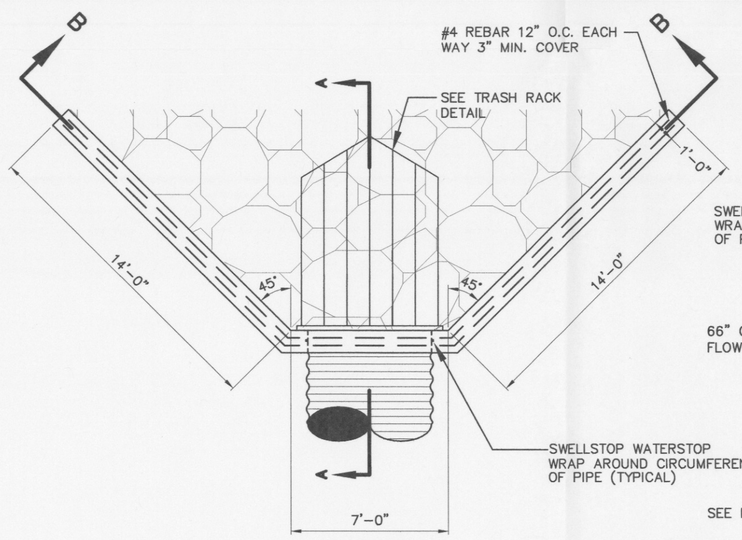

PLAN

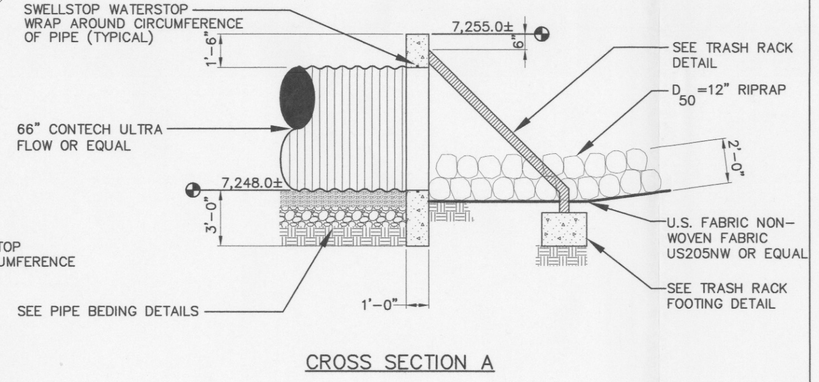

CROSS SECTION A

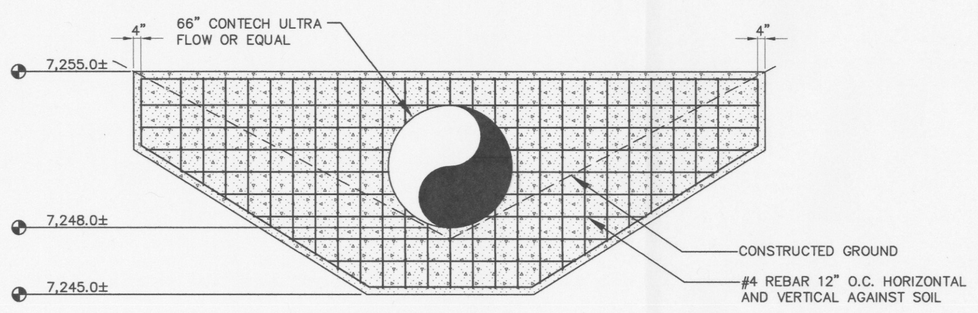

CROSS SECTION B

OVERFLOW POND BYPASS INLET DETAIL

NO SCALE

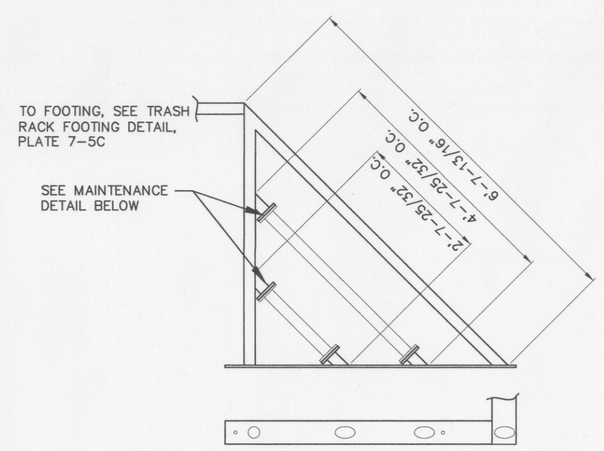

WEST SIDE

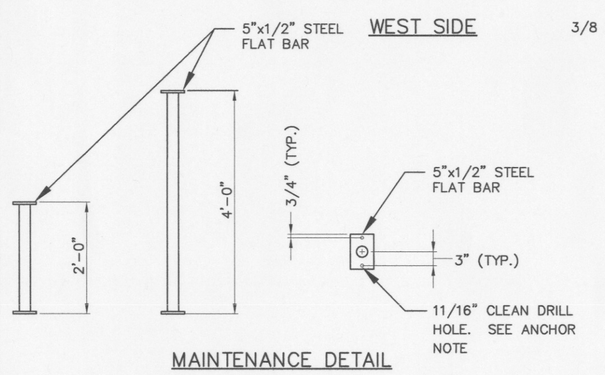

MAINTENANCE DETAIL

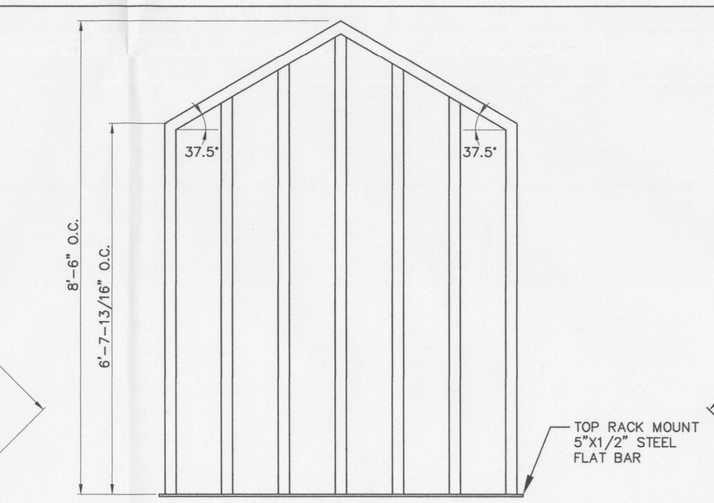

TOP

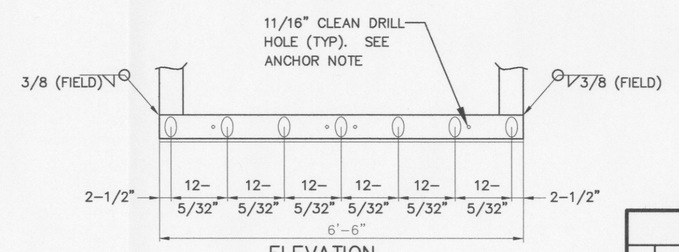

ELEVATION

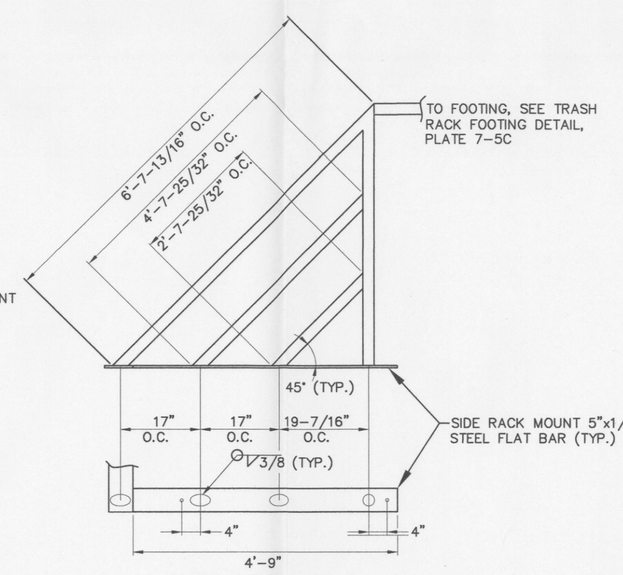

EAST SIDE

TRASH RACK DETAIL

NO SCALE

ANCHOR NOTE:

ANCHOR TRASH RACK TO OVERFLOW POND BYPASS CONCRETE INLET WITH 5/8"x8" HILTI THREADED ROD OR EQUAL. IMBED THREAD ROD 6" IN CONCRETE. USE HILTI HIT ADHESIVE OR EQUAL TO ANCHOR THREAD ROD. USE ZINC PLATED FLAT WASHER, LOCK WASHER AND GRADE 5 HEX NUT. FOLLOW ALL MANUFACTURER'S RECOMMENDATIONS FOR INSTALLATION.

BOLT NOTE:

USE 5/8"-11x1-1/2" HEX HEAD COURSE THREADED, ZINC PLATED, GRADE 5 BOLTS WITH 5/8"-11 GRADE 5, ZINC PLATED FLAT WASHER, LOCK WASHER AND HEX HEAD NUT TO FASTEN MAINTENANCE ENTERANCE.

PIPE NOTE:

ALL STEEL NOT CALLED OUT TO BE 2" DIA. SCHEDULE 80 STEEL PIPE.

INCORPORATED
OCT 01 2009
Div. of Oil, Gas & Mining

REGISTERED PROFESSIONAL ENGINEER
No. 168246
RICHARD B. WHITE
STATE OF UTAH

REVISIONS				
NO.	DATE	REQ. BY	DWG. BY	REMARKS

Canyon Fuel Company, LLC
SUFCO Mine
397 South 800 West – Salina, UT 84654
(435) 286-4880 Phone
(435) 286-4499 Fax

OVERFLOW POND DETAILS

SCALE:	DATE:	DRAWN BY:	ENGINEER:	PLATE NO.
AS SHOWN	06/17/09	SWF/TAJ	TAJ	7-5B
CHECKED BY: BRW	FILE NAME: G:\UC1191\02-Sed Pond design\Final Design\PLATE 7-5B			

U:\1191.\G - Sed pond design\Final Design\PLATE 7-5B.dwg, 10/8/2009 10:39:26 PM