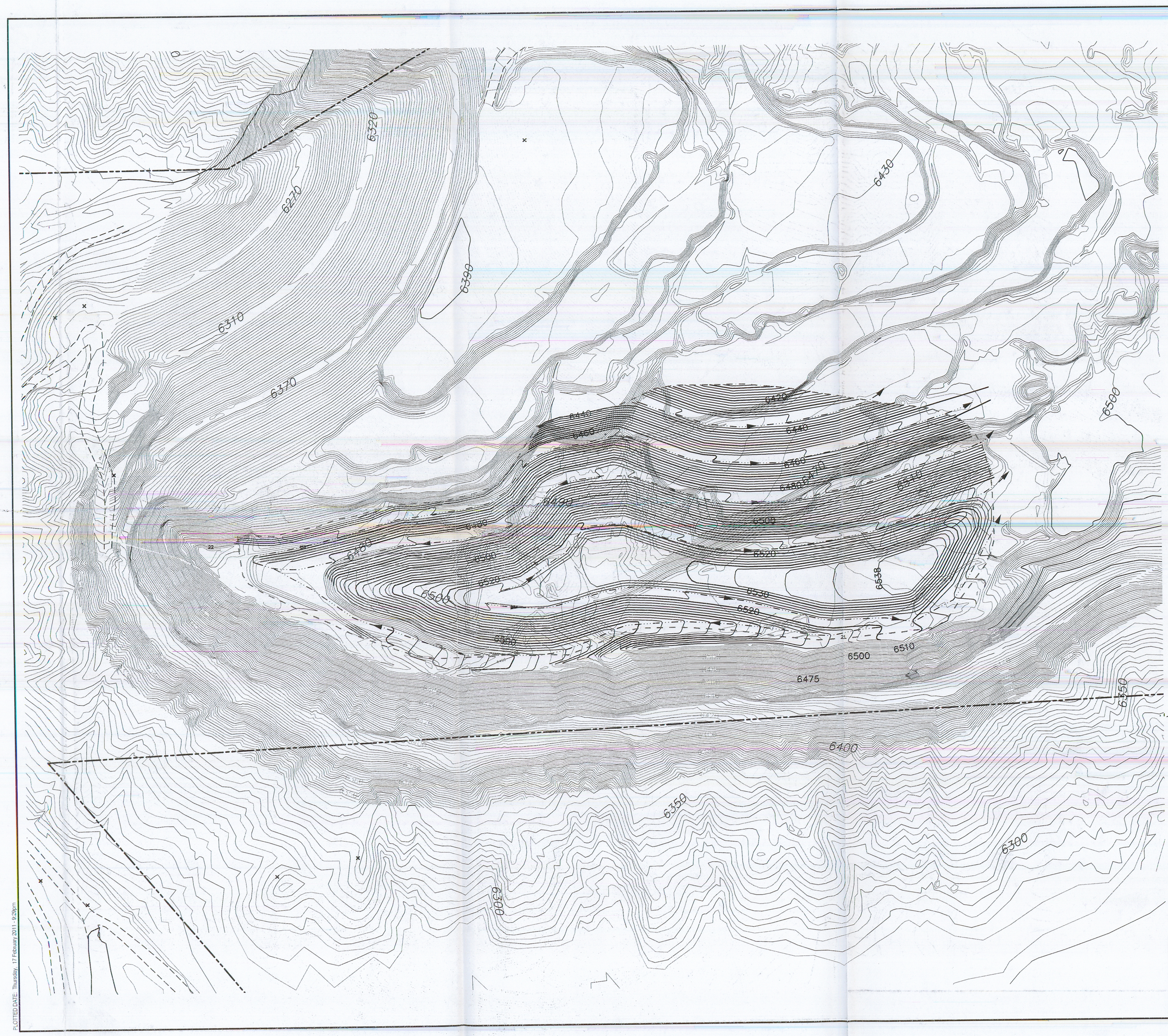

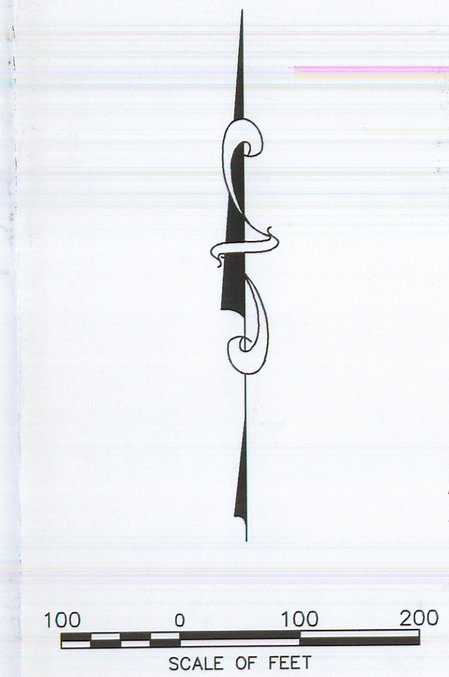

LEGEND

PERMIT BOUNDARY

DIVERSIONS

DIRECTION OF DIVERSIONS (TO MATCH INTO EXISTING DIVERSIONS TO SEDIMENT PONDS)

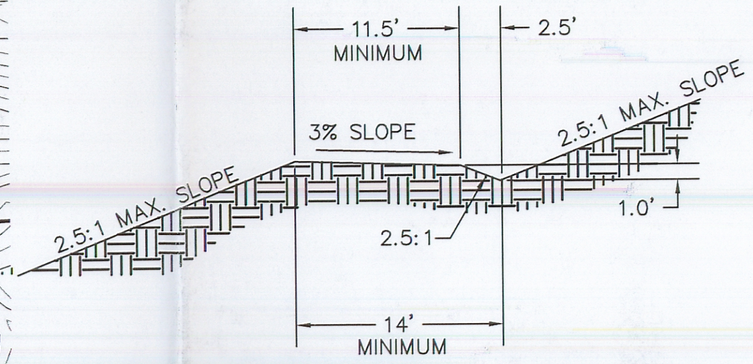

TYPICAL TERRACE DETAIL

NTS

NOTE:

1. TERRACES ARE TO BE CONSTRUCTED APPROXIMATELY FOR EVERY 25' TO 35' RISE IN ELEVATION, TO CONTROL DRAINAGE AND ALLOW FOR MAINTENANCE TO THE EXCESS SPOIL DISPOSAL AREA.
2. THE SLOPE OF THE DRAINAGE DIVERSIONS SHALL BE 0.5% MIN. TO 4% MAX.

REV	DATE	DESCRIPTION	BY	APP'D
2	11/10	BOUNDARY AND TOPO UPDATES	AH	
1	9/02	2002 PERMIT RENEWAL	AH	

RECEIVED
OCT 18 2011
DIV. OF OIL, GAS & MINING

INCORPORATED
SEP 21 2011
Div. of Oil, Gas & Mining

LICENSED PROFESSIONAL ENGINEER
No. 10227
S. SCOTT CARLSON
STATE OF UTAH
10/11

9-11-94

SCALE 1" = 100'

PROJECT NO. –

Sunnyside Cogeneration Associates
EXCESS SPOIL DISPOSAL AREA #1 DESIGN
DRAINAGE AND DIVERSION PLAN

TWIN PEAKS
Engineering & Land Surveying
2264 NORTH 1450 EAST LEHI, UTAH 84043
(801) 450-3511, (801) 439-0700 FAX

DESIGNED AH
DRAWN AH
CHECKED SSC

SHEET 9-1D

PLOTTED DATE: Thursday, 17 February 2011 - 9:29pm