APPENDIX D

SOILS TABLES

SEE SOILS MAP E, VOLUME IV
FOR LOCATIONS OF SOIL SAMPLE SITES AND SOIL TYPES

Table 1. Soil Analysis Data, Profile Description, Sample Site 3

Mapping Unit: A,a
Vegetative Type: Spruce/Fir
Location: Lease area

Horizon	Depth	Color		Texture			Class	Structure	% Rock Fgts.	% Org. Mat.
		Dry	Moist	Sand	Silt	Clay				
0*	2 - 0									
A_1	0 - 3	10YR 5/2	10YR 3/2	33	55	12	sl	1mkpl / 2mgr	5gr	6.99
A_2	3 - 7	10YR 7/2	7.5YR 5/4	48	37	15	l	2m sbk	5gr	0.44
B_{21}	7 - 14	10YR 7/2	10YR 5/4	48	39	13	l	2m & f sbk	5gr	t
B_{22}**	14 - 20	10YR 7/3	10YR 6/4	49	39	12	l	2m sbk	10 gr, 5k	t
C	20 - 52+	10 YR 8/4	10YR 6/6	43	39	16	l	m	20 gr, 15k, 5s	t

Horizon	pH	Effervescence	EC x 10^3	Solubility ppm			SAR	% Moist. Satur.
				Ca	Mg	Na		
0*								
A_1	6.3	eo	0.67	86.9	10.4	10.7	0.14	61
A_2	5.6	eo	0.31	44.8	4.8	9.9	0.19	26
B_{21}	5.6	eo	0.29	41.8	4.6	11.8	0.23	24
B_{22}**	5.4	eo	0.26	35.0	5.8	15.0	0.31	21
C	5.6	eo	0.31	27.8	4.2	20.8	0.48	21

Taxonomic Classification: Loamy-skeletal, mixed, mollic cryoboralfs. *Decomposing spruce/fir needles and twigs; **20% 10YR 7/2 and 15% 10YR 6/8 weathering stains.

Table 2. Soil Analysis Data, Profile Description, Sample Site 11

Mapping Unit: B,b, and f
Vegetative Type: Aspen
Location: Lease area

Horizon	Depth	Color		Texture			Class	Structure	% Rock Fgts.	% Org. Mat.
		Dry	Moist	Sand	Silt	Clay				
A_{11}	0 - 3		7.5YR 3/2	50	28	22	scl	2mgr		6.98
A_{12}	3 - 9		7.5YR 3/2	53	27	20	scl	1f sbk		4.78
B_1	9 - 14		7.5YR 3/2	53	25	22	scl	2c sbk		1.81
B_{2+}	14 - 24		10YR 3/3	51	28	21	scl	3mpr	2gr	1.44
B_3	24 - 48		10YR 4/3	50	28	22	scl	2c sbk	7gr	0.77
C	28 - 50		10YR 5/4	41	24	25	1	m	5gr 10k	0.41

Horizon	pH	Effervescence	EC x 10^3	Solubility ppm			SAR	% Moist. Satur.
				Ca	Mg	Na		
A_{11}	6.9	eo	0.20	63.5	10.9	9.6	0.15	49
A_{12}	7.0	eo	0.43	42.6	5.6	11.8	0.23	36
B_1	7.1	eo	0.38	34.6	4.0	22.1	0.47	28
B_{2+}	7.0	eo	0.33	27.8	3.0	17.8	0.43	25
B_3	6.9	eo	0.32	27.5	2.7	19.8	0.48	25
C	6.7	eo	0.37	35.5	4.0	23.7	0.50	27
R*								

Taxonomic
Classification: Fine loamy, mixed Argic Pachic Cryoborolls. *Sandstone

Table 3. Soil Analysis Data, Profile Description, Sample Site 12

Mapping Unit: C
Vegetative Type: Grass/Forb/Elderberry
Location: Lease area

Horizon	Depth	Color		Texture			Class	Structure	% Rock Fgts.	% Org. Mat.
		Dry	Moist	Sand	Silt	Clay				
A_{11}	0 - 4	10YR 3/2	10YR 3/2	22	45	33	cl	2m gr	2gr	5.31
A_{12}	4 - 8		7.5YR 3/2	32	38	30	cl	1m sbk 2fgr	2gr	4.19
B_{21}	8 - 19		10YR 4/2	34	35	31	cl	2c sbk	4gr	2.52
B_{22+}	19 - 29		10YR 4/2	34	36	30	cl	2m pr	5gr	2.23
C	29 - 33		10YR 5/5	39	34	27	l	m	10gr 15k 20s	0.83
R*	33+									

Horizon	pH	Effervescence	EC x 10^3	Solubility ppm			SAR	% Moist. Satur.
				Ca	Mg	Na		
A_{11}	6.7	eo	1.28	26.1	24.8	15.7	0.26	44
A_{12}	6.5	eo	0.44	47.7	5.4	14.7	0.27	39
B_{21}	6.8	eo	0.33	34.1	2.9	16.8	0.37	35
B_{22+}	6.8	eo	0.32	31.5	3.2	18.4	0.42	34
C	6.7	eo	0.35	36.8	4.0	17.6	0.37	29
R*								

Taxonomic Classification: Loamy-skeletal, mixed Argic Cryoborolls. *Sandstone

Table 4. Soil Analysis Data, Profile Description, Sample Site 10

Mapping Unit: g
Vegetative Type: Aspen
Location: Conveyor Route

Horizon	Depth	Color		Texture			Class	Structure	% Rock Fgts.	% Org. Mat.
		Dry	Moist	Sand	Silt	Clay				
A_1	0 - 6	10YR 4/2	10YR 3/2	63	21	16	sl	3f gr	10gr	7.83
AC	6 - 20	10YR 5/2	10YR 3/2	64	22	14	sl	2f sbk 2mgr	10gr 5k	2.81
C	20 - 31	10YR 6/3	10YR 5/4	64	22	14	sl	1m sbk	20gr 30k 20s	0.58
R*	31+									

Horizon	pH	Effervescence	EC x 10^3	Solubility ppm			SAR	% Moist. Satur.
				Ca	Mg	Na		
A_1	6.6	eo	0.67	97.0	13.8	6.9	0.09	41
AC	6.7	eo	0.47	65.6	6.6	9.4	0.15	30
C	6.4	eo	0.35	49.1	4.5	10.7	0.20	23
R*								

Taxonomic Classification: Coarse loamy, mixed Pachic Cryborolls. *Sandstone

Table 5. Soil Analysis Data, Profile Description, Sample Site 8

Mapping Unit: i
Vegetative Type: Aspen
Location: Conveyor Route

Horizon	Depth	Color		Texture			Class	Structure	% Rock Fgts.	% Org. Mat.
		Dry	Moist	Sand	Silt	Clay				
0*	1 - 2									
A_{11}	0 - 2	10YR 4/2	7.5YR 3/2	59	26	14	sl	1mkpl 2fgr	5gr	6.53
A_{12}	2 - 10	10YR 5/3	7.5YR 3/2	58	25	17	sl	2fobk 2mgr	10gr 5k	3.51
B_2	10 - 23	10YR 6/3	7.5YR 4/4	59	26	15	sl	2m sbk	20gr 10k	1.58
C	23 - 48	2.5YR 7/4	10YR 5/4	47	29	24	l	m	15gr 20k	t
CR**	48 - 60+								k100	

Horizon	pH	Effervescence	EC x 10^3	Solubility ppm			SAR	% Moist. Satur.
				Ca	Mg	Na		
0+								
A_{11}	6.9	eo	0.96	121.4	17.4	9.4	0.11	67
A_{12}	6.8	eo	0.49	55.4	6.1	10.2	0.17	29
B_2	6.7	eo	0.33	40.3	2.9	15.2	0.31	22
C	6.3	eo	0.31	35.0	3.4	18.6	0.40	30

Taxonomic Classification: Loamy-skeletal, mixed typic Cryoboroll.

* Decomposing leaves and twigs.

** Weathering conglomerate.

Table 6. Soil Analysis Data, Profile Description, Sample Site 6

Mapping Unit: k
Vegetative Type: Aspen
Location: Conveyor Route

Horizon	Depth	Color		Texture			Class	Structure	% Rock Fgts.	% Org. Mat.
		Dry	Moist	Sand	Silt	Clay				
A_{11}	0 - 4	10YR 4/2	7.5YR 3/2	59	25	16	sl	3f gr	10gr	6.16
A_{12}	4 - 14	10YR 5/3	5.5YR 3/2	48	34	18	l	2 f&m sbk	10gr 5k	1.07
AC	14 - 32	10YR 6/3	10YR 3/3	49	33	18	l	2m sbk	10gr 10k	2.72
C	32 - 48+	10YR 6/3	7.5YR 4/4	52	31	17	l	1 m&c sbk	10gr 15k 5s	t

Horizon	pH	Effervescence	EC x 10^3	Solubility ppm			SAR	% Moist. Satur.
				Ca	Mg	Na		
A_{11}	7.3	eo	0.84	111.8	18.6	14.1	0.16	45
A_{12}	7.2	eo	0.33	40.0	4.6	14.1	0.28	29
AC	7.2	eo	0.32	41.0	4.8	14.6	0.29	27
C	7.4	eo	0.31	38.7	4.5	14.2	0.29	26

Taxonomic Classification: Coarse-loamy, mixed cumulic Cryoborols.

Table 7. Soil Analysis Data, Profile Description, Sample Site 5

Mapping Unit: 1
Vegetative Type: Sagebrush
Location: Conveyor Route

Horizon	Depth	Color		Texture			Class	Structure	% Rock Fgts.	% Org. Mat.
		Dry	Moist	Sand	Silt	Clay				
A_{11}	0 - 3	10YR 4/2	10YR 3/2	30	54	16	sl	2f, gr	10gr, 5k	2.66
A_{12}	3 - 8	10YR 5/2	10YR 3/2	54	27	19	sl	1f, sbk	10gr, 10k	1.86
B	8 - 24	10YR 7/3	10YR 5/4	56	30	14	sl	2f, sbk	10gr, 30k 10s	t
C	24 - 31	2.5YR 7/4	10YR 5/5	52	25	28	scl	1m, sbk	5 gr, 25k 15s	t
R	31 + *									

Horizon	pH	Effervescence	EC x 10^3	Solubility ppm			SAR	% Moist. Satur.
				Ca	Mg	Na		
A_{11}	7.3	eo	0.72	112.5	17.6	12.0	0.14	34
A_{12}	7.3	eo	0.54	72.4	11.2	12.5	0.18	30
B	7.4	eo	0.37	52.3	8.3	11.2	0.19	25
C	7.4	eo	0.40	49.0	8.5	17.6	0.30	34
R								

Taxonomic Classification: Loamy-skeletal, mixed typic cryoboralf.. * Sandstone

Table 8. Soil Analysis Data, Profile Description, Sample Site 4

Mapping Unit: m
Vegetative Type: Sagebrush
Location: Lease area

Horizon	Depth	Color		Texture			Class	Structure	% Rock Fgts.	% Org. Mat.
		Dry	Moist	Sand	Silt	Clay				
A_1	0 - 8	10YR 5/2	10YR 4/2	32	14	54	cl	3f gr	5gr	4.21
B_2	8 - 19	2.5YR 7/2	2.5yr 6/4	22	37	14	cl	3f abk	5gr	t
C_1	19 - 28	2.5YR 7/5	10YR 5/8	38	28	34	cl	2m sbk	15gr 25k	t
C_2	28 - 36	2.5YR 7/2	10YR 6/3**	71	11	18	sl	m	5gr 20k 50s	t

Horizon	pH	Effervescence	EC x 10^3	Solubility ppm			SAR	%
				Ca	Mg	Na		Moist. Satur.
A_1	7.3	eo	0.88	156.5	8.6	14.4	0.15	56
B_2	7.6	eo	0.38	62.2	2.7	11.8	0.2	41
C_1	7.7	eo	0.47	81.4	4.3	12.5	0.18	35
C_2	7.8	eo	0.44	74.2	2.9	8.8	0.14	28

Taxonomic Classification: Loamy-skeletal, mixed typic cryoboralf. *20% 10YR 6/8 weathering stains
**10% 10YR 6/8 weathering stains.

Table 9. Soil Analysis Data, Profile Description, Sample Site 2

Mapping Unit: p
Vegetative Type: Disturbed
Location: Lease area

Horizon	Depth	Color		Texture			Class	Structure	% Rock Fgts.	% Org. Mat.
		Dry	Moist	Sand	Silt	Clay				
A_1	0 - 5	10YR 4/2	10YR 2/2	46	34	20	1	3f gr		6.67
AC	5 - 12	10YR 5/2	10YR 5/2*	32	41	27	1	2m sbk		5.77
C_1**	12 - 25	10YR 5/2	10YR 4/3	47	33	20	1	2c sbk		4.31
C_2	25 - 57	10YR 6/2	10YR 4/1	59	26	15	sl	m		1.96
C_3	57 - 67+	10YR 6/2	10YR 5/2	72	15	13	sl	m	65 gr	2.25

Horizon	pH	Effervescence	EC x 10^3	Solubility ppm			SAR	% Moist. Satur.
				Ca	Mg	Na		
A_1	6.2	eo	3.22	745.0	71.7	15.0	0.07	47
AC	7.2	eo	2.20	455.7	46.1	14.2	0.08	44
C_1	7.0	eo	2.31	499.2	66.6	16.0	0.09	42
C_2	7.2	eo	1.66	348.2	45.1	20.6	0.14	35
C_3	6.8	eo	2.26	499.2	61.4	24.2	0.14	33

Taxonomic Classification: Coarse-loamy, mixed, mollic Cryofluvent. *Mottles begin at 8 inches; **C horizons are stratified layers of sands and silts that vary in thickness and in texture.

Table 10. Soil Analysis Data, Profile Description, Sample Site 1

Mapping Unit: q
Vegetative Type: Sagebrush
Location: Lease area

Horizon	Depth	Color		Texture			Class	Structure	% Rock Fgts.	% Org. Mat.
		Dry	Moist	Sand	Silt	Clay				
A_{11}	0 - 5	10YR 4/2	10YR 2/2	45	31	24	l	3f gr		6.02
A_{12}	5 - 14	10YR 4/2	10YR 2/2	73	4	23	scl	3f gr		3.06
AC	14 - 24	10YR 5/2	7.5YR 3/2	45	36	19	l	1m sbk/2fsbk		1.27
C_1	24 - 31	10YR 5/2	10YR 3/2	48	31	21	l	2c gr		1.36
C_2	31 - 42+	10YR 5/3	10YR 3/3	59	21	20	sl	1fsbk	60 gr 4k	1.01

Horizon	pH	Effervescence	EC x 10^3	Solubility ppm			SAR	% Moist. Satur.
				Ca	Mg	Na		
A_{11}	6.9	eo	2.92	422.4	47.4	13.8	0.08	44
A_{12}	7.3	eo	1.20	235.5	30.4	17.6	0.14	35
AC	7.1	eo	0.97	151.7	32.5	19.4	0.19	30
C_1	7.2	eo	0.89	151.8	32.8	26.6	0.25	32
C_2	7.3	eo	1.10	204.8	37.3	16.6	0.14	28

Taxonomic Classification: Coarse-loamy, mixed cumulic cryoborolls.

Table 11. S[illegible] Analysis Data, Profile Description, Sample Site 15

Mapping Unit: r
Vegetative Type: Stinging nettle
Location: Lower Conveyor Route

Horizon	Depth	Color		Texture			Class	Structure	% Rock Fgts.	% Org. Mat.
		Dry	Moist	Sand	Silt	Clay				
A_1	0 - 4	10YR 3/2	10YR 2.5/1	33	47	20	Loam	2 f gr	10 gr	7.04
B_{2+}	4 - 12	10YR 5/3	7.5YR 3/2	31	44	25	Loam	2 m pr	15 gr	1.40
C_1	12 - 23	10YR 7/3	10YR 4/4	36	44	20	Loam	massive	30 gr 15 cob	T
C_2	23 - 34	10YR 6/4	10YR 4/4	37	41	41	Loam	massive	25 gr 15 cob 5 stone	T
R	33									

Horizon	pH	Effervescence	EC x 10^3	Solubility ppm			SAR	% Moist. Satur.
				Ca	Mg	Na		
A_1	7.28	eo	0.43	146.0	28.50	17.90		
B_{2+}	7.46	eo	0.27	36.2	5.86	6.88	?	?
C_1	7.61	eo	0.20	20.2	4.42	9.44		
C_2	7.48	eo	0.26	22.9	4.53	13.90		

Taxonomic Classification: Typic argiborolls, coarse-loamy, mixed, frigid

Table 12. Soil Analysis Data, Profile Description, Sample Site 17

Mapping Unit: t
Vegetative Type: Spruce/Fir
Location: Lower Conveyor Route

Horizon	Depth	Color		Texture			Class	Structure	% Rock Fgts.	% Org. Mat.
		Dry	Moist	Sand	Silt	Clay				
A_1	0 - 2	10YR 3/2	10YR 2/2	35	44	21	Loam	3 f gr	0	7.82
B_{21}	2 - 11	10YR 4/2	10YR 3/3	35	41	24	Loam	2 f sbk	5 gr	3.09
B_{22+}	11 - 20	10YR 5/2	7.5YR 3/3	32	44	24	Loam	1 f sbk	3 gr	1.35
C	20 - 33	10YR 6/3.5	10YR 4/4	35	40	25	Loam	massive	20 gr 5 cob	0.27
R	33									

Horizon	pH	Effervescence	EC x 10^3	Solubility ppm			SAR	% Moist. Satur.
				Ca	Mg	Na		
A_1	7.20	eo	0.68	104.0	17.70	4.96		
B_{21}	7.36	eo	0.32	50.7	8.54	5.60		
B_{22+}	7.48	eo	0.21	31.4	4.43	6.24		
C	7.31	eo	0.19	29.3	4.78	7.68		

Taxonomic Classification: Mollic eutroboralfs coarse-loamy, mixed, frigid with 15% u and 5% q

Table 13. Soil Analysis Data, Profile Description, Sample Site 18

Mapping Unit: u
Vegetative Type: Aspen
Location: Lower Conveyor Route

Horizon	Depth	Color		Texture			Class	Structure	% Rock Fgts.	% Org. Mat.
		Dry	Moist	Sand	Silt	Clay				
A_{11}	0 - 3	10YR 3/2	10YR 2.5/1	33	41	26	Loam	3 m gr	3 gr	7.15
A_{12}	3 - 9	10YR 4/2	10YR 2.5/1	37	37	26	Loam	3 m sbk	0	2.76
B_{21}	9 - 15	10YR 5/3	7.5YR 3/2	35	41	24	Loam	2 c sbk	0	0.61
B_{22}	15 - 23	10YR 6/3	10YR 3/3	35	40	25	Loam	2 m pr	5 gr 10 cob	T
C_1	23 - 32	10YR 6/4	10YR 4/4	35	37	28	Clay loam	1 f sbk	15 gr	T
C_2	32 - 37	10YR 6/4	10YR 4/4	31	36	33	Clay loam	massive	15 gr	T
R	37									

Horizon	pH	Effervescence	EC x 10^3	Solubility ppm			SAR	% Moist. Satur.
				Ca	Mg	Na		
A_{11}	7.23	eo	0.80	134.0	19.30	4.96		
A_{12}	7.33	eo	0.41	61.9	9.14	6.72		
B_{21}	7.41	eo	0.28	36.5	5.49	7.52		
B_{22}	7.45	eo	0.21	27.7	4.46	6.88		
C_1	7.26	eo	0.23	32.5	6.03	10.20		
C_2	7.16	eo	0.30	21.3	3.98	16.80		

Taxonomic Classification: Typic haploborolls

Table 14. Soil Analysis Data, Profile Description, Sample Site 7

Mapping Unit: v
Vegetative Type: Sagebrush
Location: Conveyor Route

Horizon	Depth	Color		Texture			Class	Structure	% Rock Fgts.	% Org. Mat.
		Dry	Moist	Sand	Silt	Clay				
A_1	0 - 5	10YR 4/2	7.5YR 3/2	51	31	18	l	2f gr	15 gr 15 k 10s	5.25
B_2	5 - 16	10YR 5/3	10YR 4/3	50	33	17	vfsl	2f sbk	5 gr 30k 15s	1.32
R*										

Horizon	pH	Effervescence	EC x 10^3	Solubility ppm			SAR	% Moist. Satur.
				Ca	Mg	Na		
A_1	7.1	eo	0.83	133.4	16.8	12.5	0.14	41
B_2	7.1	eo	0.54	84.5	11.7	12.0	0.16	31

Taxonomic Classification: Loamy-skeletal, mixed lithic Cryocrepts. *Sandstone

APPENDIX E

Aquatic Resource Information

Table 2. Macroinvertebrate community data as mean number/m^2 for the South Fork of Eccles Creek, station ECSF, Carbon County, Utah.

Taxa	11 May 1979	23 Aug 1979	02 Oct 1979	TQ
Nematoda	8	258	73	108
Gastropoda	--	--	22	108
Pelecypoda	--	--	11	108
Planorbidae	--	22	--	108
Oligochaeta	38	116	269	108
Turbellaria	1,501	654	1,420	108
Hydracarina	619	482	118	108
Copepoda	51	129	8	108
Ostracoda	417	745	438	108
Collembola	--	--	78	108
Ephemeroptera				
Baetis	845	882	1,913	72
Cinygmula	958	3,796	3,548	21
Paraleptophlebia	35	43	91	24
Ephemerella	--	409	159	48
Ephemerella grandis	129	--	--	24
Ephemerella coloradensis	--	46	--	18
Ephemerella inermis	100	638	--	48
Plecoptera				
Prostoia besametsa	8	22	--	24
Zapada cinctipes	1,149	516	422	16
Taenionema	--	--	46	48
Megarcys signata	62	67	32	24
Capniidae	--	164	638	32
Skwala parallela	5	--	--	18
Chloroperlidae	30	55	59	24
Trichoptera				
Rhyacophila	288	202	105	18
Arctopsyche	--	22	--	18
Hydropsyche	--	22	27	108
Parapsyche	16	--	32	6
Limnephilidae	--	--	19	108
Oligophlebodes	81	2,655	83	24
Neothremma	32	--	54	8
Dicosmoecous	--	3	8	24
Chyranda	3	--	--	18
Brachycentrus	5	--	8	24
Micrasema	8	--	--	24
Coleoptera				
Hydrophilidae	--	--	11	--
Elmidae	70	229	113	108

Table 2. Continued.

Diptera				
Tipulidae	8	--	--	72
Dicranota	27	22	35	24
Hexatoma	62	65	11	36
Bolorusia grandis	24	11	11	72
Ptychopteridae	8	—	—	72
Pericoma	62	94	75	36
Simuliidae	13	51	30	108
Chironomidae	2,340	5,173	409	108
Ceratopogonidae	32	94	19	108
Euparyphus	91	92	32	108
Hemerodromia	196	—	27	108
Mean Number/m^2	9,321	17,773	10,453	
Standard Dev.	7,243	10,150	4,180	
Coeff. of Var.	77.7	57.1	40.0	
Mean Dry Wt. gm/m^2	2.1	1.5	1.5	
Number of Taxa	35	32	37	
H (Shannon-Weaver)	3.51	3.32	3.29	
CTQa	58	63	68	

Table 3. Macroinvertebrate community data as mean number/m^2 for Eccles Creek below South Fork Eccles, station EC03, Carbon County, Utah.

Taxa	11 May 1979	23 Aug 1979	02 Oct 1979	TQ
Nematoda	19	—	22	108
Pelecypoda	—	43	3	108
Hirudinea	—	—	—	108
Oligochaeta	369	237	105	108
Turbellaria	616	118	325	108
Hydracarina	126	140	452	108
Copepoda	56	43	269	108
Ostracoda	91	11	156	108
Collembola	—	—	56	108
Ephemeroptera				
Baetis	9,870	7,693	5,485	72
Cinygmula	1,310	8,005	4,732	21
Paraleptophlebia	97	86	210	24
Ephemerella	—	1,162	231	48
Ephemerella grandis	153	11	—	24
Ephemerella coloradensis	—	22	—	18
Ephemerella doddsi	—	11	43	4
Ephemerella inermis	—	204	202	48
Ephemerella margarita	—	—	—	24
Plecoptera				
Prostoia besametsa	43	118	—	24
Zapada cinctipes	807	775	320	16
Amphinemoura	—	11	—	6
Taenionema	56	97	—	48
Megarcys signata	24	75	48	24
Capniidae	—	2,012	1,501	32
Isoperla fulva	—	—	—	48
Diura knowltoni	—	97	—	24
Chloroperlidae	11	86	14	24
Hesperoperla pacifica	—	22	—	18
Trichoptera				
Rhyacophila	487	43	89	18
Parapsyche	—	3	5	6
Oligophlebodes	11	86	43	24
Neothremma	—	43	32	8
Micrasema	483	—	75	24
Coleoptera				
Dytiscidae	—	—	3	—
Elmidae	183	97	51	108

Table 3. Continued.

Diptera				
Dicranota	32	237	221	24
Hexatoma	—	22	—	36
Bolorusia grandis	5	11	—	72
Tipula	—	—	3	36
Ptychopteridae	22	3	—	72
Pericoma	81	86	11	36
Simuliidae	—	32	24	108
Chironomidae	2,967	1,356	1,020	108
Ceratopogonidae	94	11	11	108
Euparyphus	30	108	11	108
Hemerodromia	51	—	19	108
Mean Number/m^2	18,093	23,247	15,871	
Standard Dev.	8,455	10,395	11,841	
Coeff. of Var.	46.5	44.7	74.6	
Mean Dry Wt. gm/m^2	4.2	3.1	1.4	
Number of Taxa	27	37	33	
H (Shannon-Weaver)	2.45	2.74	2.89	
CTQa	64	55	62	

Table 4. Macroinvertebrate community data as mean number/m^2 for Eccles Creek below South Fork Eccles, station EC03, Carbon County, Utah.

Taxa	14 Apr 1980	TQ
Nematoda	14	108
Pelecypoda	--	108
Hirudinea	29	108
Oligochaeta	29	108
Turbellaria	990	108
Hydracarina	29	108
Copepoda	—	108
Ostracoda	29	108
Collembola	—	108
Ephemeroptera		
Baetis	9,081	72
Cinygmula	2,654	21
Paraleptophlebia	--	24
Ephemerella	--	48
Ephemerella grandis	--	24
Ephemerella coloradensis	--	18
Ephemerella doddsi	--	4
Ephemerella inermis	--	48
Ephemerella margarita	3,013	24
Plecoptera		
Prostoia besametsa	301	24
Zapada cinctipes	430	16
Amphinemoura	--	6
Taenionema	43	48
Megarcys signata	118	24
Capniidae	143	32
Isoperla fulva	--	48
Diura knowltoni	--	24
Chloroperlidae	100	24
Hesperoperla pacifica	--	18
Trichoptera		
Rhyacophila	114	18
Parapsyche	—	6
Oligophlebodes	--	24
Neothremma	--	8
Micrasema	--	24
Coleoptera		
Dytiscidae	--	--
Elmidae	43	108

Table 4. Continued.

Diptera		
Dicranota	--	24
Hexatoma	--	36
Holorusia grandis	—	72
Tipula	—	36
Ptychopteridae	—	72
Pericoma	—	36
Simuliidae	72	108
Chironomidae	8,838	108
Ceratopogonidae	43	108
Euparyphus	22	108
Hemerodromia	57	108
Mean Number/m^2	26,251	
Standard Dev.	5,119	
Coeff. of Var.	19.5	
Mean Dry Wt. gm/m^2	2.0	
Number of Taxa	23	
H (Shannon-Weaver)	2.41	
CTQa	70	

Table 5. Macroinvertebrate community data as mean number/m^2 for Eccles Creek below Whiskey Springs, station EC04, Carbon County, Utah.

Taxa	11 May 1979	23 Aug 1979	02 Oct 1979	TQ
Nematoda	43	54	272	108
Gastropoda	8	—	—	108
Pelecypoda	—	11	11	108
Oligochaeta	1,364	646	503	108
Turbellaria	223	65	75	108
Hydracarina	207	506	272	108
Copepoda	11	—	43	108
Ostracoda	19	75	59	108
Collembola	16	—	16	108
Ephemeroptera				
Ameletus	8	—	—	48
Baetis	6,779	8,468	21,757	72
Cinygmula	369	3,605	2,674	21
Epeorus	16	—	—	21
Paraleptophlebia	13	—	145	24
Ephemerella	—	366	43	48
Ephemerella grandis	75	129	40	24
Ephemerella coloradensis	—	65	54	18
Ephemerella doddsi	—	22	—	4
Ephemerella inermis	22	151	38	48
Ephemerella margarita	—	—	—	24
Plecoptera				
Megarcys signata	22	—	—	24
Prostoia besametsa	301	516	54	24
Zapada cinctipes	223	990	1,943	16
Taenionema	46	291	966	48
Capniidae	—	473	2,383	32
Isoperla	—	—	8	48
Skwala parallela	—	—	5	18
Diura knowltoni	—	—	3	24
Chloroperlidae	19	—	13	24
Hesperoperla pacifica	—	22	—	18
Trichoptera				
Rhyacophila	417	420	161	18
Hydropsyche	—	108	108	108
Limnephilidae	—	43	—	108
Oligophlebodes	11	452	110	24
Neothremma	—	—	8	8
Lepidostoma	—	43	—	18
Brachycentrus	11	—	—	24
Micrasema	135	430	245	24

Table 5. Continued.

Diptera				
Antocha monticola	11	22	32	24
Dicranota	19	108	105	24
Hexatoma	—	22	—	36
Holorusia grandis	3	3	11	72
Ptychopteridae	22	—	—	72
Pericoma	27	22	43	36
Simuliidae	—	52	—	108
Chironomidae	861	6,553	1,614	108
Ceratopogonidae	30	22	97	108
Euparyphus	19	161	99	108
Atherix pachypus	—	—	8	24
Hemerodromia	207	172	89	108
Limnophora	—	—	19	108
Mean Number/m^2	11,634	25,273	34,233	
Standard Dev.	7,222	10,619	22,842	
Coeff. of Var.	62.1	42.0	66.7	
Mean Dry Wt. gm/m^2	1.2	2.3	2.2	
Number of Taxa	35	35	39	
H (Shannon-Weaver)	2.45	3.06	2.23	
CTQa	62	63	60	

Table 6. Macroinvertebrate community data as mean number/m^2 for Eccles Creek below Whiskey Springs, station EC04, Carbon County, Utah.

Taxa	14 Apr 1980	TQ
Nematoda	43	108
Gastropoda	--	108
Pelecypoda	--	108
Oligochaeta	441	108
Turbellaria	151	108
Hydracarina	140	108
Copepoda	--	108
Ostracoda	11	108
Collembola	--	108
Ephemeroptera		
Ameletus	--	48
Baetis	732	72
Cinygmula	11	21
Epeorus	54	21
Paraleptophlebia	--	24
Ephemerella	--	48
Ephemerella grandis	22	24
Ephemerella coloradensis	--	18
Ephemerella doddsi	--	4
Ephemerella inermis	--	48
Ephemerella margarita	86	24
Plecoptera		
Megarcys signata	13	24
Prostoia besametsa	463	24
Zapada cinctipes	32	16
Taenionema	86	48
Capniidae	398	32
Isoperla	--	48
Skwala parallela	--	18
Diura knowltoni	--	24
Chloroperlidae	11	24
Hesperoperla pacifica	--	18
Trichoptera		
Rhyacophila	323	18
Hydropsyche	--	108
Limnephilidae	--	108
Oligophlebodes	43	24
Neothremma	--	8
Lepidostoma	--	18
Brachycentrus	97	24
Micrasema	--	24

Table 6. Continued.

Coleoptera		
Haliplidae	--	54
Elmidae	86	108
Diptera		
Antocha monticola	--	24
Dicranota	43	24
Hexatoma	--	36
Holorusia grandis	11	72
Ptychopteridae	--	72
Pericoma	--	36
Simuliidae	--	108
Chironomidae	2,249	108
Ceratopogonidae	11	108
Euparyphus	32	108
Atherix pachypus	--	24
Hemerodromia	22	108
Limnophora	11	108

Mean Number/m^2	13,420
Standard Dev.	11,040
Coeff. of Var.	82.3
Mean Dry Wt. gm/m^2	2.2
Number of Taxa	28
H (Shannon-Weaver)	2.30
CTQa	61

Table 7. Macroinvertebrate community data as mean number/m^2 for Eccles Creek at Mouth, station EC05, Carbon County, Utah.

Taxa	11 May 1979	23 Aug 1979	02 Oct 1979	TQ
Nematoda	43	—	51	108
Pelecypoda	—	—	—	108
Oligochaeta	143	126	597	108
Turbellaria	—	—	16	108
Hydracarina	202	75	188	108
Ostracoda	—	—	16	108
Collembola	—	—	5	108
Ephemeroptera				
Baetis	5,942	51	656	72
Cinygmula	81	116	67	21
Epeorus	30	—	8	21
Paraleptophlebia	22	—	8	24
Ephemerella	—	—	11	48
Ephemerella grandis	43	—	24	24
Ephemerella inermis	51	—	—	48
Ephemerella margarita	—	—	—	24
Odonata				
Argia	—	—	5	108
Plecoptera				
Malenka	22	—	—	36
Prostoia besametsa	4,842	—	—	24
Zapada cinctipes	186	167	1,560	16
Taenionema	—	8	—	48
Megarcys signata	13	—	—	24
Capniidae	—	54	40	32
Isoperla	11	—	30	48
Skwala parallela	18	—	—	18
Chloroperlidae	19	24	22	24
Trichoptera				
Rhyacophila	291	30	183	18
Hydropsyche	67	62	673	108
Cheumatopsyche	—	—	—	108
Limnephilidae	—	8	35	108
Hesperophylax	8	—	—	108
Brachycentrus	148	—	352	24
Micrasema	—	—	11	24
Coleoptera				
Elmidae	11	11	67	108

Table 7. Continued.

Diptera				
Antocha monticola	--	--	27	24
Dicranota	56	—	8	24
Hexatoma	8	8	8	36
Holorusia grandis	13	—	8	72
Tipula	—	8	—	36
Eriocera	—	—	—	72
Pericoma	16	19	5	36
Simuliidae	—	--	56	108
Chironomidae	5,958	1,385	9,130	108
Ceratopogonidae	30	105	56	108
Stratiomyidae	--	--	--	108
Euparyphus	--	--	--	108
Hemerodromia	398	247	382	108
Mean Number/m^2	18,661	2,526	14,308	
Standard Dev.	12,773	1,066	6,806	
Coeff. of Var.	68.4	42.2	47.6	
Mean Dry Wt. gm/m^2	4.5	0.6	3.5	
Number of Taxa	28	18	32	
H (Shannon-Weaver)	2.28	2.59	2.15	
CTQa	57	67	65	

Table 8. Macroinvertebrate community data as mean number/m^2 for Eccles Creek at Mouth, station EC05, Carbon County, Utah.

Taxa	14 Apr 1980	TQ
Nematoda	22	108
Pelecypoda	3	108
Oligochaeta	420	108
Turbellaria	118	108
Hydracarina	420	108
Ostracoda	22	108
Collembola	—	108
Ephemeroptera		
Baetis	1,818	72
Cinygmula	22	21
Epeorus	—	21
Paraleptophlebia	—	24
Ephemerella	—	48
Ephemerella grandis	—	24
Ephemerella inermis	11	48
Ephemerella margarita	11	24
Odonata		
Argia	—	108
Plecoptera		
Malenka	—	36
Prostoia besametsa	3,110	24
Zapada cinctipes	—	16
Taenionema	—	48
Megarcys signata	3	24
Capniidae	—	32
Isoperla	—	48
Skwala parallela	—	18
Chloroperlidae	5	24
Trichoptera		
Rhyacophila	32	18
Hydropsyche	22	108
Cheumatopsyche	43	108
Limnephilidae	—	108
Hesperophylax	56	108
Brachycentrus	97	24
Micrasema	—	24
Coleoptera		
Elmidae	22	108

Table 8. Continued.

Diptera		
Antocha monticola	11	24
Dicranota	65	24
Hexatoma	—	36
Holorusia grandis	8	72
Tipula	—	36
Eriocera	43	72
Pericoma	—	36
Simuliidae	—	108
Chironomidae	5,757	108
Ceratopogonidae	11	108
Stratiomyidae	3	108
Euparyphus	22	108
Hemerodromia	387	108
Mean Number/m^2	12,560	
Standard Dev.	3,906	
Coeff. of Var.	31.1	
Mean Dry Wt. gm/m^2	3.7	
Number of Taxa	28	
H (Shannon-Weaver)	2.32	
CTQa	73	

Table 9. Macroinvertebrate community description as mean number/m^2 for Pleasant Valley Creek 100 m above Eccles Creek, station PVC02, Carbon County, Utah.

Taxa	11 May 1979	23 Aug 1979	TQ
Nematoda	—	22	108
Oligochaeta	215	140	108
Hydracarina	382	2,130	108
Copepoda	—	22	108
Ostracoda	54	54	108
Collembola	—	33	108
Ephemeroptera			
Baetis	1,837	15,247	72
Heptagenia	—	113	48
Paraleptophlebia	40	—	24
Ephemerella	—	54	48
Ephemerella grandis	19	124	24
Ephemerella inermis	1,033	22	48
Plecoptera			
Prostoia besametsa	11	—	24
Capniidae	—	16	32
Pteronarcella badia	8	5	24
Isoperla	—	43	48
Isoperla fulva	19	—	48
Trichoptera			
Rhyacophila	8	3	18
Hydropsyche	382	570	108
Arctopsyche	24	2,927	18
Stactobiella	—	32	108
Limnephilidae	—	167	72
Brachycentrus americanus	210	11	24
Coleoptera			
Elmidae	1,044	2,233	108
Diptera			
Tipulidae	—	527	72
Antocha monticola	83	—	24
Dicranota	124	22	24
Holorusia grandis	19	22	72
Eriocera	89	103	36
Simuliidae	11	301	108
Chironomidae	23,457	1,840	108
Ceratopogonidae	22	135	108
Stratiomyidae	11	27	108
Hemerodromia	78	75	108

Table 9. Continued.

Mean Number/m^2	29,178	27,016
Standard Dev.	14,485	4,546
Coeff. of Var.	50	17
Mean Dry Wt. gm/m^2	8.29	6.46
Number of Taxa	24	30
H (Shannon-Weaver)	1.306	2.354
CTQa	65	70

Table 10. Macroinvertebrate community description as mean number/m^2 for Pleasant Valley Creek 2 km below Eccles Creek, station PVC01, Carbon County, Utah.

Taxa	11 May 1976	11 May 1979	23 Aug 1979	TQ
Nematoda	—	8	54	108
Oligochaeta	22	48	65	108
Hydracarina	323	30	751	108
Copepoda	—	—	22	108
Ostracoda	32	—	—	108
Collembola	151	8	—	108
Ephemeroptera				
Ameletus	11	—	—	48
Baetis	7,532	1,028	6,800	72
Cinygmula	2,733	30	108	21
Ephemerella grandis	—	24	32	24
Ephemerella doddsi	43	—	—	18
Ephemerella coloradensis	581	—	—	4
Ephemerella inermis	—	65	—	48
Plecoptera	43	—	—	
Malenka	—	—	22	36
Prostoia besametsa	—	22	—	24
Zapada cinctipes	1,076	22	—	16
Capniidae	22	—	22	32
Pteronarcella badia	—	32	43	24
Perlodidae	11	—	22	48
Megarcys signata	11	—	—	24
Diura knowltoni	—	8	—	24
Chloroperlidae	65	22	43	24
Hemiptera				
Ambrysus mormon	11	—	—	72
Trichoptera				
Rhyacophila	129	8	3	18
Agapetus	11	—	—	32
Hydropsyche	11	38	818	108
Arctopsyche	—	—	65	18
Parapsyche	22	—	—	6
Dicosmoecous	—	—	3	24
Hesperophylax	11	8	—	108
Oligophlebodes	301	—	3	24
Brachycentrus americanus	11	13	43	24
Micrasema	—	8	—	24
Coleoptera				
Dytiscidae	—	—	3	72
Elmidae	—	204	204	108

Table 10. Continued.

Diptera				
Dicranota	—	—	22	24
Holorusia grandis	11	—	—	72
Eriocera	—	8	129	36
Bittacamorpha clavipes	—	3	—	72
Pericoma	151	—	—	36
Simuliidae	22	—	140	108
Chironomidae	3,572	678	872	108
Ceratopogonidae	22	16	43	108
Stratiomyidae	—	—	11	108
Hemerodromia	54	22	86	108
Muscidae	—	—	22	108
Mean Number/m^2	16,995	2,176	10,416	
Standard Dev.	—	887	4,457	
Coeff. of Var.	—	41	43	
Mean Dry Wt. gm/m^2	—	1.08	1.90	
Number of Taxa	29	23	28	
H (Shannon-Weaver)	2.461	2.406	2.103	
CTQa	58	62	68	

Table 11. Sediment composition of potential gravel spawning beds as Percent by Weight for five size classes at five stations (1) EC02, Eccles Creek above South Fork; (2) EC04, Eccles Creek below Whiskey Springs; (3) EC05, Eccles Creek at the mouth; (4) PVC02, Pleasant Valley Creek above Eccles Creek; and (5) PVC01, Pleasant Valley Creek below Eccles Creek. Samples taken 24 August 1979.

Particle Size	Station EC02	EC04	EC05	PVC02	PVC01
Gravel > 4.75 mm	73.6	70.8	70.6	71.9	71.6
Coarse Sand 2.0-4.75 mm	8.7	8.5	9.2	7.3	9.0
Medium Sand 0.50-1.99 mm	5.5	5.2	6.1	7.6	5.8
Fine Sand 0.074-0.49 mm	12.0	15.3	13.9	12.9	13.2
Silt/Clay < 0.074 mm	0.2	0.2	0.2	0.3	0.4
Fines < 0.850 mm	13.5	16.9	15.8	15.7	15.2

Table 12. Substrate composition of Eccles Creek listed as percent cover. Surveyed 11 June 1979. Station locations shown in Figure 1.

Substrate Type, Diameter	Station EC02	EC04	EC05
Boulder > 31 cm	0	5	5
Lg. Rubble 15.1-31 cm	20	20	15
Sm. Rubble 7.7-15.0 cm	30	25	20
Lg. Gravel 2.6-7.6 cm	20	15	15
Sm. Gravel 0.5-2.54 cm	20	15	20
Sand/Silt < 0.5 cm	10	20	25

Table 13. Stream channel characteristics of Eccles Creek as measured 11 June 1979 at: EC02, Eccles Creek above South Fork Eccles Creek; EC05, Eccles Creek above mouth of canyon. Measurements taken 11 June 1979.

	EC02	EC03	EC04	EC05
Channel gradient	0.04			0.03
Channel turtuosity	1.22			1.40
Watered channel mean width at Q	2.8 ft @ 3.5 cfs			3.6 ft @ 6.3 cfs
Mean depth at Q	0.51 ft @ 3.5 cfs			0.62 ft @ 6.3 cfs
Tall bank mean width	37.0 ft			26.2 ft opening onto a wide meadow
Riffle: Pool ratio	3:2			3:2
Mean bank stability	90%			85%
Bank vegetation in order of dominance	grasses shrubs evergreens dec. trees			grasses evergreens shrubs dec. trees

Table 14. Age-Growth of Cutthroat Trout taken in Eccles Creek from Two Sections (UDWR Field Records, 8/25/71).

Age Class	Mean Size (mm)	Range (mm)	Mean Weight (gms)	Range (gms)	No.	%
0	56	45-67	7.5	5-10	2	3
1	118	78-175	27.3	10-60	68	79
2	198	180-228	95.0	75-125	15	17
3	257	---	170.0	---	1	1
					86	

Comments:

1. Possibly some 1+ are 2+ fish
2. 0+ age class were not recovered, due to size
3. No non-game species were collected.

Table 15 Stream Survey of Eccles Creek 1 1/2 miles above confluence with Mud or Pleasant Valley Creek, 25 August 1971.

UTAH STATE DIVISION OF FISH AND GAME

(Sheet No. 2)

Date August 25, 1971 Collection No. 1-2-1 Investigator John Livesay

Catalog No. II.K.20.b (4) Stream Eccles Creek

Tributary to Mud Creek Drainage Green River

Report no. 1 of ____ reports.

Location of station 1-1/2 miles up from confluence of Mud Creek.

Length of Station 528' Elevation of Station 8100'

Temperature		Discharge		Bottom Type		
Time	2:00 P.M.	Velocity fps	1.8	Boulders	0	%
Air	62°	Volume cfs	3.6	Rubble	33	%
Water	54°	Maximum	No record	Gravel	48	%
Time		Date		Sand	0	%
Air		Minimum		Silt	19	%
Water		Date	No Record	Other		%

Average Channel 0.6

Average width of stream 5.8' ft. Area of station 3062.4 sq. ft.

Pools: No. per 1/10 mile 10 Ave. width 6.9' Ave. length 8.3' Ave. Depth 1.34'

Bank cover composition Willow (Ab) Grass (Ab) Sedge (c) Equisetum (S)

% bank stabilization RB 88% LB 76 % stream shaded RB 34% LB 43%

Pollution (types, sources, amounts, etc.) None

		Aquatic Vegetation		Bottom fauna	
Turbidity	None		Good		Good
pH	8.2	Absent		Absent	
Phenol. Alk.		Sparse	X	Sparse	
Methyl Orange	256.5	Common		Common	X
D.O	8.0	Abundant		Abundant	
$C.O._2$	3.4	Major types		Major types	Trichoptera (c)
		Fil Green Algae		Tendipedidae (s) Coleoptera (Sp)	
				Ephemeroptera (c)	

Remarks Pools: Cover = 59%, Rating = B-. Pools are good in this area with sufficient cover. Spawning habitat and food are suitable. Volume of water is the only limiting factor.

Table 16 Stream Survey of Eccles Creek 0.3 miles above confluence with Mud or Pleasant Valley Creek, 25 August 1971.

UTAH STATE DIVISION OF FISH AND GAME

(Sheet No. 2)

Date August 25, 1971 Collection No. 1-1-2 Investigator John Livesay

Catalog No. II.K.20.b.(4) Stream Eccles Creek

Tributary to Mud Creek Drainage Green River

Report no. 2 of _____ reports.

Location of station .3 miles up fromconfluence of Mud Creek.

Length of Station 528' Elevation of Station 7900'

Temperature		Discharge		Bottom Type		
Time	3:30 P.M.	Velocity fps	1.5	Boulders	5	%
Air	65°	Volume cfs	3.6	Rubble	39	%
Water	54°	Maximum	No Record	Gravel	51	%
Time		Date		Sand	0	%
Air		Minimum	No Record	Silt	5	%
Water		Date		Other		%

Average channel 6.6'

Average width of stream 5.8' ft. Area of station 3062.4 sq. ft.

Pools: No. per 1/10 mile 2 Ave. width 7.5' Ave. length 10ft. Ave. Depth .7'

Bank cover composition Grass (Ab) Sedge (C)

% bank stabilization RB 74% LB 80 % stream shaded RB 13% LB 16%

Pollution (types, sources, amounts, etc.) None

		Aquatic Vegetation		Bottom fauna	
Turbidity	None		Good		Good
pH	8.2	Absent		Absent	
Phenol. Alk.	0	Sparse	X	Sparse	
Methyl Orange	205.2	Common		Common	
$C.O._2$	2.6	Abundant		Abundant	X
		Major types		Major types	Ephemeroptera (A)
		Fil. Green Algae			Trichoptera (C) Simuliidae (C)
					Coleoptera (S) Tendipedidae (S) Plecop (S)

Remarks: Pools: 15% cover, Rating = C. Pools are lacking in this segment and the ones that are there do not appear very good. The area is good for spawning and excellent in food.

APPENDIX F

Species List by Plant Community Type

See Vegetation Map G for Locations

APPENDIX F

Species list by plant community types for:

Vaughn Hansen Assoc. - Valley Camp Project; Riparian (R), Spruce-fir (SF), Aspen (A), Grass-Forb-Elderberry (GFE), Snowberry-Sagebrush (SS), Sagebrush (SB), Fringed sagebrush (FS), Disturbed (D), Seeded on pipeline (1), and Seeded on pipeline and roads (2).

	R	SF	A	GFE	SS	SB	FS	D
Abies lasiocarpa		X	X					X
Achillea millefolium	X	X	X	X	X	X		X
Actaea rubra		X						X
Agastache urticifolia			X	X				X
Agoseris aurantiaca			X	X				
Agropyron caninum	X	X	X	X	X	X		X
cristatum							1	
dasystachyum			X					X
intermedium			2	2				2
spicatum			X			X	X	
smithii			X			X		X
Agrostis scabra			X					
stolonifera	X		X					X
variabilis	X							
Alopecurus pratensis			1			1		1
Amaranthus sp.								X
Androsace septentrionalis					X			
Anemone multifida		X	X					X
Antennaria microphylla			X			X	X	
rosea		X	X					X
Aquilegia coerulea	X	X						X
Arabis drummondii			X	X		X		
Arctostaphylos patula		X	X					
Arenaria sp.		X						
Arnica chamissonis	X							
cordifolia		X						X
Arrhenatherum elatius			1					1
Artemisia cana	X					X		X
cana var. bolanderi	X			X				
dracunculus				X				X
frigida							X	
tridentata			X			X		X
Aster chilensis			X	X		X		X
engelmannii		X						X
occidentalis	X							
Astragalus argophyllus				X				
convallarius						X		
Barbarea orthoceras	X							
Bromus anamolus			X			X		X
carinatus		X	X	X	X	X		X
ciliatus		X						X
inermis			2	2		2		2
tectorum					X		X	

	R	SF	A	GFE	SS	SB	FS	D
Calamagrostis neglecta	X							
Caltha leptosepala	X							
Capsella bursa-pastoris		X	X					
Cardamine cordifolia	X	X						
Cardaria draba								X
Carex			X					X
spp.		X						X
aquatilis	X							
egglestonii				X				
geyeri		X	X			X		X
hoodii			X	X	X	X		X
kellogii	X							
lanuginosa	X							
praegracilis	X							
microptera	X							
nebraskensis	X							
rossii			X			X		
rostrata	X							
vallicola					X			
Castilleja leonardii						X		
linariifolia			X			X		
miniata		X						X
Catabrosa aquatica	X							
Cerastium sp.	X							
Chaenactis douglasii			X					X
Chenopodium fremontii			X	X	X	X	X	X
Chorispora tenella				X				
Chrysothamnus nauseosus					X	X		
viscidiflorus				X	X	X	X	X
Cirsium scariosum (foliosum)	X	X	X	X	X	X		X
vulgare								X
Clematis hirsutissima						X		
Cleome serrulata				X				
Claytonia lanceolata		X		X				
Collinsia parviflora		X	X	X		X		X
Collomia linearis			X	X	X			X
Comandra umbellata						X		
Corallorhiza sp.			X					
maculata		X						X
Crepis acuminata					X			
Cryptantha sp.						X		X
crassisepala		X	X	X				X
gracilis			X					X
Cynoglossum officinale			X					X
Dactylis glomerata	X		2			2		2
Delphinium menziesii			X	X				
occidentale	X		X	X				X
Deschampsia caespitosa	X							
Descurainia californica	X		X	X		X		X
pinnata			X	X				
Disporum trachycarpum		X						X
Draba sp.			X					

	R	SF	A	GFE	SS	SB	FS	D
Eleocharis sp.	X							
Elymus glaucus		X	X					X
Epilobium alpinum	X	X						
paniculatum			X			X		
angustifolium		X						X
Equisetum arvense	X							
Erigeron engelmannii		X						X
lonchophyllus	X							
speciosus				X				
subtrinervis				X				
superbus		X						X
Eriogonum umbellatum						X		
Erysimum asperum			X	X	X	X		X
Fragaria virginiana	X	X	X					X
Frasera speciosa		X				X		X
Fritillaria atropurpurea				X				
Galium sp.			X					X
bifolium		X						X
boreale		X						X
trifidum			X	X				
Gayophytum nuttallii			X	X	X	X		
ramosissimum			X			X		X
Gentianella amarella	X							
Geranium fremontii		X	X			X		X
richardsonii	X		X					X
Geum macrophyllum	X							
Gilia sp. (annual)						X		
aggregata						X		
Glaux maritima	X							
Glyceria striata	X							
Goodyera repens		X						X
Habenaria sparsiflora	X							
Hackelia floribunda		X	X	X	X	X		X
patens						X		
Helenium hoopesii	X	X	X	X	X	X	X	X
Heliomeris multiflora			X			X		X
Heracleum lanatum	X	X						
Hieracium scouleri			X					
Hordeum brachyantherum	X			X				
jubatum		X	X	X				X
Hydrophyllum capitatum		X		X				
Iva axillaris	X							
Juncus arcticus	X							
ensifolius	X							
longistylis	X							
Juniperus communis			X					X
osteosperma						X		
Koeleria nitida				X				
Lactuca serriola			X					
Lappula occidentalis			X	X	X	X		X
Lathyrus lanzwertii		X	X	X	X	X	X	X
pauciflorus		X	X					X

	R	SF	A	GFE	SS	SB	FS	D
Lepidium densiflorum				X				
Ligusticum porteri						X		X
Linanthus harknessii				X				
Lithophragma bulbifera			X					
Lonicera involucrata	X	X						
utahensis	X	X						X
Lupinus sp.		X						X
Lupinus argenteus	X							
sericeus						X		
Luzula parviflora	X							
Machaeranthera bigelovii		X	X			X		X
canescens				X				
Madia glomerata				X				
Mahonia repens		X	X			X		X
Medicago sativa			X	X		X		X
Melica bulbosa			X	X		X		
Mertensia ciliata	X	X	X	X				X
Mimulus guttatus	X							
Mitella sp.		X						X
stenopetala	X							
Moneses uniflora		X						
Monolepis nuttallianus						X		X
Muhlenbergia filiformis	X							
richardsonis						X		X
Nemophila breviflora			X					X
Orthocarpus tolmei						X		
Osmorhiza chilensis		X						
depauperata		X	X					X
occidentalis		X	X	X				
Pachystima myrsinites	X	X						X
Penstemon humilus						X		
procerus	X					X		
subglaber			X			X		
watsonii		X	X	X	X	X	X	X
whippleanus		X	X					
Phacelia hastata			X	X	X	X		X
heterophylla			X		X	X		X
sericea						X		X
Phleum alpinum	X							
pratense	X							2
Phlox caespitosus						X		
Physocarpus malvaceous		X						
Picea engelmannii		X						
pungens	X	X	X					X
Pinus flexilis							X	
Plagiobothrys scouleri	X							
Poa sp.		X						X
bulbosa								X
canbyi			X					
fendleriana			X			X	X	X
interior			X					
nervosa				X				

	R	SF	A	GFE	SS	SB	FS	D
Poa palustris			X					X
pratensis	X	X	X	X		X		X
reflexa	X	X	X	X				X
sandbergii						X		
Polemonium foliosissimum	X	X	X			X		X
pulcherrimum	X				X			
Polygonum aviculare						X		X
bistortoides			X	X				
douglasii	X				X			X
kelloggii						X		X
sawatchense			X	X		X		X
Populus tremuloides		X	X					X
Potentilla anserina	X							
fruticosa	X					X		
glandulosa				X				
gracilis	X		X	X		X		X
Prunus virginiana			X			X		X
Pseudotsuga menziesii					X			
Pyrola secunda		X						X
Ranunculus alismaefolius	X							
inamoenus		X						X
testiculatus			X					
Ribes cereum		X	X		X	X		X
hudsonianum			X					
inerme						X		
montigenum	X	X		X				
viscosissimum	X							
Rorippa curvipes	X							
Rosa woodsii		X				X		X
Rubus idaeus	X							
parviflorus		X						X
Rudbeckia occidentalis			X		X	X		X
Rumex acetosella								X
crispus								X
salicifolius	X			X		X		X
Salix geyeri	X							
lutea		X						X
rigida	X							
Sambucus coerulea		X	X					X
racemosa	X	X	X	X	X	X		X
Saxifraga odontoloma	X							
Scrophularia lanceolata			X			X		X
Senecio eremophilus		X						X
integerrimus	X		X	X		X		X
multilobatus			X			X		X
serra			X	X		X		X
Shepherdia canadensis	X	X						X
Sitanion hystrix							X	
Silene antirrhina					X			
menziesii		X	X			X		X
Smilacina stellata		X	X			X		X
Solidago missouriensis		X						X

	R	SF	A	GFE	SS	SB	FS	D
Solidago parryi		X						X
Stellaria jamesiana		X	X	X		X		X
Stipa columbiana	X	X	X	X	X	X		X
comata		X						X
lettermannii		X	X	X	X	X	X	X
Symphoricarpos oreophilus		X	X	X	X	X	X	X
Taraxacum officinale	X	X	X	X				X
Tetradymia canescens							X	
Thalictrum fendleri		X	X	X	X	X		X
Thermopsis montana			X					
Thlaspi montanum		X						
Tragopogon dubius	X		X			X		
Trifolium kingii			X					
repens	X							
Trisetum spicatum		X		X				
wolfii	X							
Urtica dioica	X	X	X	X		X		X
Vaccinium membranaceum		X						X
Valeriana edulis		X	X	X				
Veratrum californicum	X	X	X	X				
Verbascum thapsus			X			X		X
Veronica serpyllifolia	X							
Vicia americana		X	X	X		X		X
Viguiera multiflora			X			X		X
Viola adunca		X						X
canadensis		X						
praemorsa			X	X				

Area: Any areas of proposed new disturbance plus a zone of 1 km. radius surrounding these sites. The route of the conveyor belt must be surveyed in areas where it will pass through presently undisturbed areas. For any undisturbed areas for new roads or portals, surveys will have to be conducted.

Time: N.A. or Spring

Purpose: To assess the presence and degree of use by these species. There are studies which are ongoing or have been completed by the UDWR office in Price. Provide data as to the occurence, abundance and habitat, in the area described above, for the Pileated Woodpecker, Williamson's Sapsucker, Lewis' woodpecker, Western Bluebird, Golden Eagle, Prairie Falcon, Cooper's Hawk, and Osprey.

3. Upland Game Bird Survey

Area: Any areas of proposed new disturbance plus a zone of 1 km. radius surrounding these sites. The route of the conveyor belt must be surveyed in areas where it will pass through presently industurbed areas. For any undisturbed areas for new roads or portals, surveys will have to be conducted.

Time: N.A.

Purpose: To assess the presence and degree of the use by these birds in any areas to be distrubed. There are studies which are ongoing or have been completed by the UDWR office in Price. Provide data as to the occurrence, abundance and existance of special habitats in these areas for upland game birds.

4. Federally Listed Threatened or Endangered Species Survey

Area: The mine plan area.

Time: N.A.

Purpose: To assess the occurance of the Bald Eagle and the Peregaine Flacon on the mine plan area. Provide a positive or negative determination as to the occurrance of these species on the mine plan area. Some information from the U WR office in Price should be available for these species.

5. Survey of All Other Vertebrates - Amphibians, Reptiles, Birds and Mammals

AreaL The mine plan area

Time: N.A.

Purpose: To provide data on the presence, status, relative abundance, population trend, preferred habitat type for all species inhabiting the mine plan area. Present the habitat preferance information to correlate with data collection from habitat (Vegetation) studies. A great deal of data has been collected by the Utah Division of Wildlife Resources Office in Price. Access to the UDWR data files in Price should be requested frmally to Mr. Larry Wilson, Supervior of the Southeastern Region.

Habitat Studies

Area: The company should assess wildlife habitat on the mine plan area with more detail for areas to be distrubed as set forth in the Division of Oil, gas, and Mining Vegetation Guidelines on June 6, 1980

DRAFT

Time: This study should assess year-round habitats for wildlife. Vegetation studies should be conducted in the summer.

Purpose: The ocmpany is required to assess the condition, trend and types of habitat within the mine plan area. In the course of owther field studies, areas of special use for wildlife, such as heavily used riparian area, large mammal dens and snake dens, should be noted and mapped.

June 20, 1980

APPENDIX G

Regulatory Authority Correspondance

COPY

CONSULTANTS / ENGINEERS
VAUGHN HANSEN ASSOCIATES
WATERBURY PLAZA - SUITE A
5620 SOUTH 1475 EAST
SALT LAKE CITY, UTAH 84121
(801) 272-5263

January 25, 1980

Ms. Mary Ann Wright
Reclamation Biologist
Division of Oil, Gas, and Mining
1588 West North Temple
Salt Lake City, Utah 84116

Re: Valley Camp Fish and Wildlife Studies

Dear Ms. Wright:

As requested in your letter of January 21, I am enclosing maps showing permit area and adjacent areas with the proposed and existing facilities and ownership to familiarize those concerned with the operation. This information has been taken from "Final Environmental Statement, Development of Coal Resources in Central Utah, Site Specific Analysis, Part 2". Following is a list of the attachments:

Page BO-I-1	Description of Proposed Action
BO-I-3	Index map showing Valley Camp of Utah, Inc., properties, Carbon and Emery Counties, Utah.
BO-I-4	Surface ownership in Valley Camp of Utah, Inc., and Routt County Development, Ltd., proposed operations.
BO-I-5	Subsurface (coal) ownership in Valley Camp of Utah, Inc., and Routt County Development, Ltd., proposed operations.
BO-I-8	Proposed surface facilities of Belina mines in Whisky Gulch, sec. 30, T. 13 S., R. 7 E.
BO-I-11	Proposed surface facilities of O'Connor mine in Boardinghouse Canyon.
BO-I-13	Proposed surface facilities of O'Connor mine in Finn Canyon.
BO-I-15	Powerline alignment for McKinnon, Belina, and O'Connor mines.

As indicated in our December letter to you, we need site-specific guidelines as soon as possible. Since the Valley Camp coal development is adjacent to the Coastal States coal development and is in the same drainage, the environment and impact should be very similar. For this reason, we are using the same consultants for both companies to prepare fish and wildlife and habitat information. Also Valley Camp and Coastal have agreed to exchange certain technical data. Thus much of the same data

presented for Coastal will also be used for Valley Camp. For these reasons, I feel confident that the guidelines for Valley Camp will be essentially the same as those developed for Coastal States.

Please let me know what else we can do to clarify the intended development and to assist you. We appreciated your letter of January 21.

Sincerely,

Vaughn E. Hansen

Vaughn E. Hansen, Ph.D., P.E.

Enclosures: Descriptive material

cc: William Haynes
Trevor Whiteside
Glen Phillips

Enclosed is a copy of the December letter to Mary Ann Wright

See #1

VALLEY CAMP OF UTAH, INC.

Scofield Route

Helper, Utah 84526

January 23, 1980

Ronald W. Daniels
Division of Oil Gas & Mining
1588 West North Temple
Salt Lake City, Utah 84116

Re: Fish and Wildlife Information and Plan Requirements
Under the Permanent Program

Dear Mr. Daniels:

Pursuant to your correspondence of January 15, 1980 concerning the above subject matter and in conjunction with our efforts to prepare a mining and reclamation plan which will comply with the State's adopted permanent program, please consider this letter as a formal request for the Division of Oil Gas & Mining to commence, in our behalf, activities pertinent to parts 1 and 2 of your letter and more specifically described as follows:

1. The Division of Oil Gas & Mining, as set forth in Section MC 783.20, shall commence consultation with other agencies having jurisdiction over fish and wildlife or their habitat in the area to be mined in order to determine the level of detail required concerning wildlife information.

   The result of such consultations to be a site-specific guideline on the level of detail of required fish and wildlife and habitat information pertinent to Valley Camp's Mine Permit application.

2. The regulatory authority shall also, as set forth in Section MC 786.17 (a) (2), determine through further consultations with the same State and Federal agencies having jurisdiction over fish and wildlife or their habitat, the adequacy of the fish and wildlife plan pursuant to the same permit application.

We realize cooperative arrangements between the Division of Oil, Gas & Mining and the Division of Wildlife Resources may yet be incomplete, but wish to proceed with fulfilling our anticipated obligation in order to avoid any possible delays in submittal of our Mine Permit application.

If further information concerning this request is required, please call upon me.

Sincerely,

Trevor G. Whiteside
Senior Mine Engineer

tgw:vy

cc: W. H. Haynes, Jr.
Golder Associates
Division of Wildlife Resources

SCOTT M. MATHESON
Governor

GORDON E. HARMSTON
Executive Director,
NATURAL RESOURCES

CLEON B. FEIGHT
Director

STATE OF UTAH
DEPARTMENT OF NATURAL RESOURCES
DIVISION OF OIL, GAS, AND MINING
1588 West North Temple
Salt Lake City, Utah 84116
(801) 533-5771

OIL, GAS, AND MINING BOARD

CHARLES R. HENDERSON
Chairman

JOHN L. BELL
C. RAY JUVELIN
THADIS W. BOX
CONSTANCE K. LUNDBERG
EDWARD T. BECK
E. STEELE McINTYRE

January 15, ~~1979~~
1980

Mr. Trevor Whiteside
Valley Camp of Utah
P.O. Box 507
Clear Creek, Utah

Re: Fish and Wildlife Information and Plan Requirements Under the Permanent Program

Dear Mr. Whiteside:

As you know, all coal operators must submit to the regulatory authority, within 2 months of the adoption of the State's permanent program, a mining and reclamation plan which will be in compliance with this program. Because of this requirement the Division finds it necessary to inform all present and proposed Utah coal operators concerning the requirements for MC 779.20 and MC 783.20, Fish and wildlife resources information, MC 780.16 and MC 784.21, Fish and wildlife plan and the adequacy review for the Fish and wildlife plan, MC 786.17(a)(2).

At this time, the Division is concerned that applicants may be receiving information from agencies other than the regulatory authority which may lead the applicant to believe that such information is the sole guidance and source of recommendations for compliance with the above mentioned sections of the regulations. In particular, there is great concern on the Division's part that undue confusion is being created by the Division of Wildlife Resources' distribution of guidelines which have not been formally adopted or approved by either the Division of Oil, Gas, and Mining or the Office of Surface Mining. The Division of Oil, Gas, and Mining is in the process of negotiating a cooperative agreement with the Division of Wildlife Resources to prevent duplicative agency demands concerning fish and wildlife requirements of mining and reclamation plans. However, until such agreement has been formalized and guidelines have been adopted by the Division of Oil, Gas, and Mining through the public notice and rulemaking process, coal operators should not rely upon guidelines proposed by other agencies.

1-15-80
P-2

Once cooperative arrangements have been developed between the Division of Oil, Gas, and Mining and the Division of Wildlife Resources, the applicants' legal responsibilities will be as follows:

1. Sections MC ~~779.16~~ 779.20 and MC 783.20 require that the Division of Oil, Gas, and Mining consult with other agencies having jurisdiction over fish and wildlife or their habitat in the area to be mined in order to determine the level of detail which shall be required concerning wildlife information. The applicant should submit a formal request to begin this consultation process. The regulatory authority will then compile, from the consultation reply(ies), a site-specific guideline on the level of detail of required fish and wildlife and habitat information. This guideline from the regulatory authority is then the sole directive for the applicant to prepare the required information.

2. Section MC 786.17(a)(2) requires that the regulatory authority shall determine the adequacy of the fish and wildlife plan in consultation with the same State and Federal agencies having jurisdiction over fish and wildlife or their habitat. This review shall be limited to the fish and wildlife plan which is to be prepared directly in conjunction with the information required by rules MC ~~779.16~~ 779.20 or MC 783.20.

Should any questions arise concerning this matter, please feel free to contact me.

Sincerely,

Ronald W. Daniels

RONALD W. DANIELS
COORDINATOR OF MINED
LAND DEVELOPMENT

RWD/sp

SCOTT M. MATHESON
Governor

GORDON E. HARMSTON
Executive Director,
NATURAL RESOURCES

CLEON B. FEIGHT
Director

STATE OF UTAH
DEPARTMENT OF NATURAL RESOURCES
DIVISION OF OIL, GAS, AND MINING
1588 West North Temple
Salt Lake City, Utah 84116
(801) 533-5771

OIL, GAS, AND MINING BOARD

CHARLES R. HENDERSON
Chairman

JOHN L. BELL
C. RAY JUVELIN
THADIS W. BOX
MAXILIAN A. FARBMAN
EDWARD T. BECK
E. STEELE McINTYRE

December 5, 1980

Mr. Glen Phillips
Golder Associates, Inc.
4671 Bayard Park Drive
Evansville, Indiana 47715

RE: Belina #1 & 2
ACT/007/001
Utah #2
ACT/007/014
Valley Camp of Utah

Dear Mr. Phillips:

The Division staff has reevaluated their position on the adjacent area for the above-noted mines as requested.

It is our position that the adjacent area designation should remain intact until such time that the permit boundary for these mines has been finalized through a permanent program approval process. You are correct in noting that the adjacent area as shown overlaps and even falls within the proposed permit line. When the permit area boundary becomes part of an approved mine and reclamation plan, it appears likely that an adjacent area will not be necessary.

Thank you for bringing this matter to our attention.

Sincerely,

MARY ANN WRIGHT
RECLAMATION BIOLOGIST

cc: Office of Surface Mining
Trevor Whiteside, Valley Camp of Utah

MAW/btm

VALLEY CAMP OF UTAH, INC.

Scofield Route
Helper, Utah 84526

October 30, 1980

Jim Smith
Coordinator
Department of Natural Resources
Division of Oil, Gas, and Mining
1588 West North Temple
Salt Lake City, Utah 84116

Dear Mr. Smith:

Section 783.14 (b) of the permanent program rules and regulations states that the requirements of 783.14 (a) (1) may be waived by the Regulatory Authority. By means of this letter Valley Camp of Utah is formally requesting that the requirements of 783.14 (a) (1), the results of the analysis from test borings, be waived for our proposed five year permit application.

Equivalent information is accessible to the regulatory authority in satisfactory form in the Coastal States Energy Company, Skyline Coal Mine permit, granted June 24, 1980.

The attached diagram demonstrates the proximity of the Skyline Mine to the Valley Camp of Utah Belina mines.

We appreciate your consideration in this matter.

Sincerely,

VALLEY CAMP OF UTAH, INC.

Trevor G. Whiteside
Senior Mining Engineer

tgw:vy

Attachment

SCOTT M. MATHESON
Governor

GORDON E. HARMSTON
Executive Director,
NATURAL RESOURCES

DALE L. FREIGHT
Director

STATE OF UTAH
DEPARTMENT OF NATURAL RESOURCES
DIVISION OF OIL, GAS, AND MINING
1588 West North Temple
Salt Lake City, Utah 84116
(801) 533-5771

OIL, GAS, AND MINING BOARD

CHARLES R. HENDERSON
Chairman

JOHN L. BELL
C. RAY JUVELIN
THADIS W. BOX
CONSTANCE K. LUNDBERG
EDWARD T. BECK
E. STEELE McINTYRE

August 14, 1980

Ms. Nancy Robertson
Golder Associates
4671 Bazard Park Drive
Evansville, IND 47715

RE: Belina and Utah Mines
ACT/007/001
ACT/007/014

Dear Nancy,

I have reviewed the seed mixture which you sent to me on July 1, 1980. I have several comments:

1. All of the grasses are introduced species.

2. The seed mixture should be about 18 to 20 pounds/acre if a measure of pure live seep (p.l.s.) is not accounted for in the mixture. If p.l.s. is used then 9-12 lbs may be adequate.

3. The use of seedlings should be strongly considered. Either bare-root or containerized stock would provide for more rapid re-establishment of vegetation.

Attatched is a list of appropriate native species with some indication of seed availability and a list of sources for further checking if you wish to do so.

Please call if you have any questions.

Sincerely,

MARY ANN WRIGHT
RECLAMATION BIOLOGIST

MAW/lml
Enclosures

SCOTT M. MATHESON
Governor

GORDON E. HARMSTON
Executive Director,
NATURAL RESOURCES

CLEON B. FEIGHT
Director

STATE OF UTAH
DEPARTMENT OF NATURAL RESOURCES
DIVISION OF OIL, GAS, AND MINING
1588 West North Temple
Salt Lake City, Utah 84116
(801) 533-5771

OIL, GAS, AND MINING BOARD

CHARLES R. HENDERSON
Chairman

JOHN L. BELL
C. RAY JUVELIN
THADIS W. BOX
CONSTANCE K. LUNDBERG
EDWARD T. BECK
E. STEELE McINTYRE

June 25, 1980

Mr. Trevor G. Whiteside
Senior Mine Engineer
Valley Camp of Utah, Inc.
Scofield Route
Helper, Utah 84526

RE: Fish and Wildlife Consultation
Pursuant to UMC 783.20
Belina #1 & #2 and Utah #2
Mines ACT/007/001 and
ACT/007/014

Dear Mr. Whiteside,

Enclosed are the guidelines which were compiled by the Division of Oil, Gas, and Mining as a result of the consultation with the agencies having jurisdiction over fish and wildlife and habitats in the mine plan area. Please be reminded of the requirements of the UMC 771.23(c) when writing your permit application.

The consultation process has established that there is a need to designate an adjacent area at the Belina and Utah mines due to effects likely to occur to fish and wildlife resources (UMC 783.20). Accordingly, Valley Camp shall provide a plan for minimizing impacts and disturbances to fish and wildlife, utilizing impact control measures, managment techniques and monitoring methods for the protection of riparian areas (UMC 784.21). The operator is also obligated to locate and operate haul and access roads so as to avoid or minimize impacts to important fish and wildlife (UMC 817.97 (d)(1)). The Division therefore designates the geographic area, from South Fork in Eccles Canyon up to the ridgline on each side of the canyon and then downstream to the confluence of Mud and Eccles Creek and from that point downstream along Mud Creek for a width of 500 feet to the lowest water monitoring station (VC-1), as an adjacent area for purposes of fish and wildlife and habitat protection, (a map is enclosed of this area).

Valley Camp therefore must address, in the Fish and Wildlife Plan section of the permit application, plans to rectify any existing problems involving coal and earth being dozed into Eccles Creek and overloaded coal being lost into the road along Eccles and Mud Creek. Mitigating measures must address means to prevent overloading of haul trucks, stabilization of steep walls and the design of a year-round road maintenance program to eliminate a continual transfer of sediment materials into the creek bed.

Guidelines for monitoring the effectiveness of this fish and wildlife plan, as outlined above, are set forth in the attached guidelines document for the Valley Camp Mines. Also enclosed for your use in preparation of the Fish and Wildlife plan for UMC 784.21 and for compliance with performance standard UMC 816.97(c) are the guidelines for the design and construction of electric power lines.

Please be advised that the Division will not hesitate to take enforcement action on these matters.

The Forest Service has recommenced that Valley Camp may find the E.I.S. by James J. Travis dated 5-26-76, to be useful in that it contains a discussion of impacts to fish and wildlife as a result of mining.

Should any questions arise concerning these matters please call me.

Sincerely,

Mary Ann Wright

MARY ANN WRIGHT
RECLAMATION BIOLOGIST

MAW/lml
Enclosure: Wildlife and Vegetation Guidelines and Map
CC: U.S. Forest Service, Price - w/enc.
Division of Wildlife Resources - w/enc.
Fish and Wildlife Service - w/enc.
Mr. Bill Haynes - Valley Camp - w/enc.
OSM, Denver

STATE OF UTAH
DEPARTMENT OF NATURAL RESOURCES
DIVISION OF OIL, GAS AND MINING
1588 West North Temple
Salt Lake City, Utah 84116
(801) 533-5771

VEGETATION INFORMATION GUIDELINES FOR PERMANENT PROGRAM SUBMISSIONS FOR COAL MINES

June 6, 1980
Revisions

* *

Pursuant to SMC 779.19 and UMC 783.19 Requirements

These guidelines are only intended to provide a suggested format for the submittal of vegetation information to be included in the mining and reclamation plans for coal. The purpose of submitting such information is as follows:

1. To approximate and describe the condition of the land prior to mining.

2. To aid in the prediction of revegetation potential for the site.

3. To identify and describe important wildlife habitat in the mine plan area and the development of corresponding mitigation plans.

4. The primary goal of vegetation studies is to establish valid reference areas which must be utilized to measure the success of revegetation for the purpose of bond release. Reference areas must be set up for each vegetation type which has been or will be disturbed at the mine. Measurements must be taken in the reference areas to describe species composition and cover. Productivity measurements in the reference areas are not useful until revegetation of the disturbed areas occurs.

These vegetation information guidelines have been drawn up at the request of coal operators in Utah. They may best be utilized as a checklist for the submittal of required information.

Should problems or questions arise concerning these guidelines, contact the Division of Oil, Gas and Mining.

SUGGESTED STEPS IN PREPARING VEGETATION INFORMATION

1. If available, use aerial photography to delineate and map the existing vegetation types found within the permit area and adjacent areas. (Scale of 1:24,000)(UMC 783.19)

2. On the same map as above show the locations and boundaries of the disturbed areas as well as any areas proposed to be disturbed. (UMC 784.23(b)(2))

3. Determine and list the acreages of each vegetation type and their percentages of the total permit area acreage.

4. Determine and list the acreages of each vegetation type found in the disturbed areas (or areas to be disturbed) and their percentages of the total acreage of each type in the permit area. Also note the total acreage of surface disturbance within the permit area.

5. For existing mines - For each vegetation type which was determined to have existed within the disturbed areas prior to mining, described each by visually dominant species and list the major species assumed to have been present within each vegetation type by common and botanical name. List the species by plant groupings, ie; trees, shrubs, forbs, grasses. Make disturbed areas on the map. (See step 2).

6. For each vegetation type which is found within any areas of new disturbance-

   a. Sample randomly for cover and productivity. For stands of trees, density and diameter at breast height (dbh) measurements should be made. Productivity measurements need not include the following: trees, officially designated weeds or noxious plants and dense mountain shrub thickets. Number sample sites and show numbered sample locations on the map,

   b. Demonstrate sample adequacy,

   c. In a narrative, describe each vegetation type by visually dominant species, and describe the condition and relative stage of maturity of the vegetation type. Note any past perturbations in the area such as fire, chaining, reseeding, previous mining, cultivation, etc. Discuss any present use by wildlife or livestock,

   d. List the major species present within each vegetation type by common and botanical name. List the species by plant groupings, ie; trees, shrubs, forbs, grasses,

   e. Identify, describe and show the map location of any endangered or threatened plants. Make a negative declaration if these are not found in the area.

   f. Map these areas on contour maps of 1:6000 (1"-500') scale or larger. Mark these maps so that referral may be made back to the permit area (1:24,000) map. (See step 2)

7. Identify reference areas , preferably within the permit area, which will not be disturbed but which are of the same vegetation type as those which occurred on the areas to be disturbed, or occur in areas of proposed disturbance.

   a. mark off the proposed areas in the field,

   b. sample randomly for cover and species composition. Number sample sites and show numbered sample locations on the map,

   c. demonstrate sample adequacy,

   d. list the species present within each vegetation type by common and botanical name. List the species by plant groupings, ie; trees, shrubs, forbs, grasses.

8. Show by table, or other simplified format, the simularity between reference areas and areas of disturbance (or proposed disturbance). Similarity must be shown between species composition, total aerial cover, productivity, geology, soils, slope and aspect. One reference area may represent more than one disturbance site if the reference areas meet the above requirements for each site. Labled sites would allow for simplied referral between the maps and test. (UMC 700.5)

9. Submit to the Division the copies of the data sheets from the sampling of areas to be disturbed and potential reference sites.

   Approval of reference areas by the Division may be obtained prior to approval of the permit application. If prior approval is desired, submittals should be made to allow time for field verifications by the Division.

10. Permanently mark off the approved reference areas in the field and show these locations on the 1:24,000 vegetation map. (See step 1)

11. All technical data submitted in the application shall be accompanied by:

   a. the names of persons or organizations which collected and analyzed such data,

   b. the dates of the collection and analyses,

   c. descriptions of methodology used to collect and analyze the data, and

   d. the name, address and position of officials of each private or academic agency consulted by the applicant in preparation of the information. (UMC 771.23)

SUMMARY OF MAP GUIDELINES

A. A vegetation map of the permit area is not required if specifically exempted by the Division.

B. A vegetation map of the entire permit area on a scale of 1:24,000 is required if not otherwise exempted by the Division. Include sufficient adjacent areas to the permit area to allow for evaluation of wildlife habitat. Adjacent areas shall be decided upon with the Division of Oil, Gas and Mining. The use of aerial photography taken prior to site disturbance would be most helpful in mapping the site.

1. The 1:24,000 contour map should:

   a. show the legal description and surface ownership of the permit area,

   b. show the boundaries of the permit area,

   c. show the location and boundaries of any surface area(s) already disturbed by mining and any which are proposed to be disturbed. Labeled sites would allow for simplified referral between the maps and text,

   d. show the location and boundaries of proposed reference area(s). If reference areas will be located outside of the permit area shown on the map, then submit a separate map for the reference area(s). Label the sites for referral to text.

   e. show the boundaries of existing vegetation types (a.k.a. community types, vegetative response units), including riparian habitats for the entire permit and adjacent areas,

   f. show the numbered locations of sampling sites,

2. The 1:6000 (1"-500'), or larger, contour map for the areas to be disturbed should:

   a. give reference points back to the 1:24,000 map, including the legal description,

   b. show the existing vegetation types. Label the sites for referral to text.

   c. show the locations of any endangered plants,

   d. show the numbered locations of sampling sites.

REVISED June 6, 1980.

(GOLDEN EAGLE)

UNITED STATES DEPARTMENT OF AGRICULTURE
Rural Electrification Administration

Reclamation
Biolog

AUG 1978
RECEIVED
USDI - OSM
REGION V.

REA BULLETIN 61-10

SUBJECT: Powerline Contacts by Eagles and Other Large Birds

State and Federal agencies concerned with the protection of wildlife have requested that REA and its borrowers cooperate in reducing the loss of eagles and other large birds due to accidental electrocution by powerlines.

Reports indicate that this problem exists primarily on distribution lines in localized areas of the western and southwestern states. However, it may exist to a lesser extent in other parts of the country. Because of greater clearances, transmission lines apparently do not present a significant threat to large birds.

Since the bald eagle is in danger of extinction, and other eagles may be in trouble also, we are asking you to cooperate to the fullest extent with State and Federal agencies to minimize accidental electrocution of these birds. The attached report discusses the causes of electrocution on REA distribution lines and offers suggestions for modifying existing structures and constructing new lines in areas where eagle electrocutions have occurred.

Administrator

Attachment

Index:
DESIGN, SYSTEM
Powerline Contacts by Large Birds - Bul. 61-10

UNITED STATES DEPARTMENT OF AGRICULTURE
Rural Electrification Administration

REA BULLETIN 61-10

SUBJECT: Powerline Contacts by Eagles and Other Large Birds

I. Introduction: In areas frequented by eagles and other large birds of prey, primarily herons and pelicans, power poles are often favorite perches. Occasionally through contact with wiring and fixtures on distribution line poles birds are electrocuted. Such contact also causes momentary or sustained outage of the powerline. Both of these incidents are undesirable and may be minimized by relatively inexpensive modifications in distribution structure design and fixtures by the power supplier. Because of their greater clearances, transmission line structures do not present a significant hazard to either small or large birds.

II. The Problem: Powerline contacts by large raptors, such as eagles and red-tailed hawks, in general are limited to localized areas where these birds hunt and nest. On any given system, it appears that remedial modification to frequently used power poles, within relatively short stretches of line, will greatly reduce the incidents of electrocution. It is probable that linemen and other operating personnel, after a short orientation, can readily identify the poles potentially most hazardous to birds. State and Federal wildlife authorities are available to conduct these orientations.

III. Behavior of Large Birds of Prey: In general, predatory birds select for perching those poles that give them the best view of the habitat of their quarry. Therefore, the poles selected often are the most elevated poles in areas heavily populated by ground squirrel, other rodents, and game within reasonable flying distance of the eyrie or within the wintering habitat of the raptor. Reports indicate that the birds are most likely to make contact between energized parts and ground wire on transformer poles. However, kills have occurred on single-phase and three-phase tangent poles as well. Favorite perch poles can be specifically determined by examining the area just below the pole for mutes or droppings of the birds and for their castings. Since birds of prey cannot digest the fur, feathers or bones of their quarry, they cast or disgorge these in the form of a pellet called a casting. These castings are as large as 1.5 inches in diameter and 5.0 inches in length.

IV. Remedial Measures: The illustrations and the text that follow (1) identify those details of standard construction that seem to contribute to bird electrocution, and (2) offer suggestions for relatively inexpensive modifications which will make the various

structures less hazardous to large birds. Only the most commonly used structures are discussed, but an understanding of how these structures can cause electrocution and how they may be modified for greater safety will permit similar corrections to other less commonly used structures that may be involved in eagle electrocution.

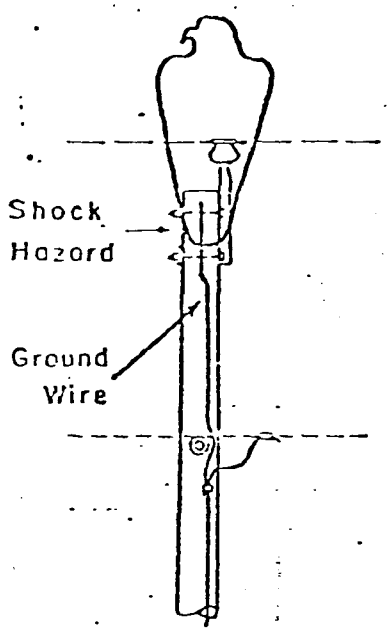

Figure 1

Single-Phase Poles Without Equipment

This structure is potentially hazardous to large birds only when the pole ground wire is extended above the neutral as shown in Figure 1. In such a case, contact could be made simultaneously between the phase conductor and pole ground wire when the bird landed on the poletop. Actually, the poletop does not seem to be a good perch because of the obstruction of the phase conductor. It is probable, therefore, that relatively few electrocutions will be experienced at these structures.

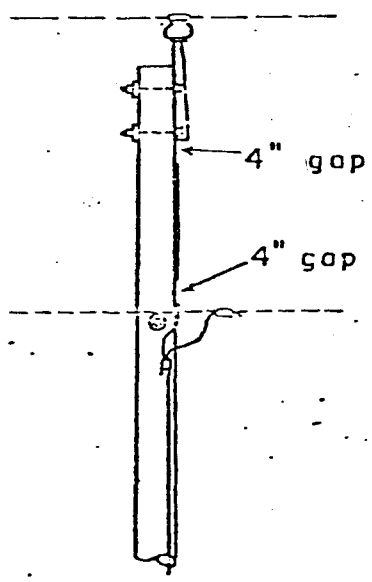

Figure 2

When electrocuted birds have been found at the base of single-phase structures, it is recommended that the ground wire be cut back to the neutral. If this is not feasible because of lightning considerations, the pole ground wire above the neutral should be double gapped as shown in Figure 2. A total of 8 inches of clear wood is believed adequate to provide safety to large birds.

Single-Phase Transformer Poles

On single-phase poles with transformers or other equipment, raptors may land on the grounded equipment tank and contact energized parts such as jumpers, open fuse links or bushing terminals. (See Figure 3.)

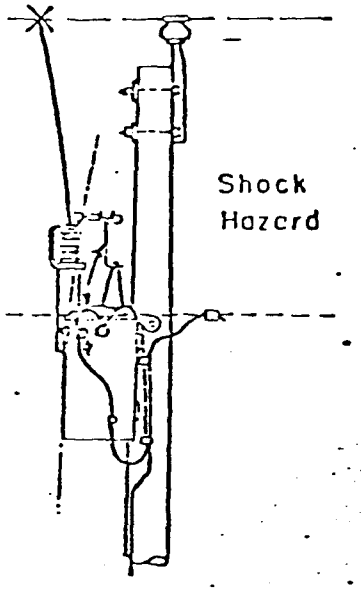

Figure 3

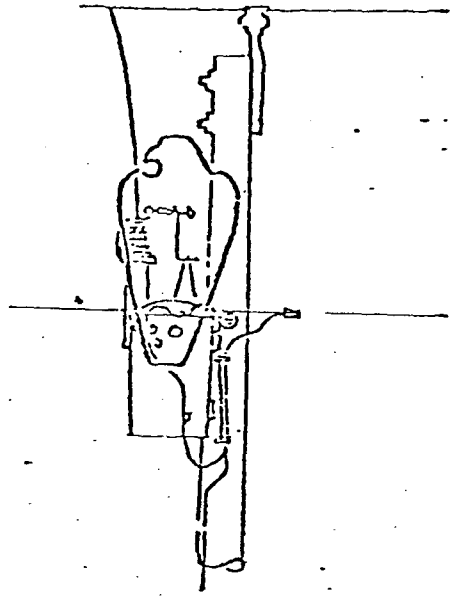

Depending on the type of transformer, it may be possible to cover all primary and secondary energized parts with which a bird is likely to make contact. The use of bird guards, transformers with internal fuses, and insulated conductors for primary jumpers should provide effective protection. (See Figure 4.)

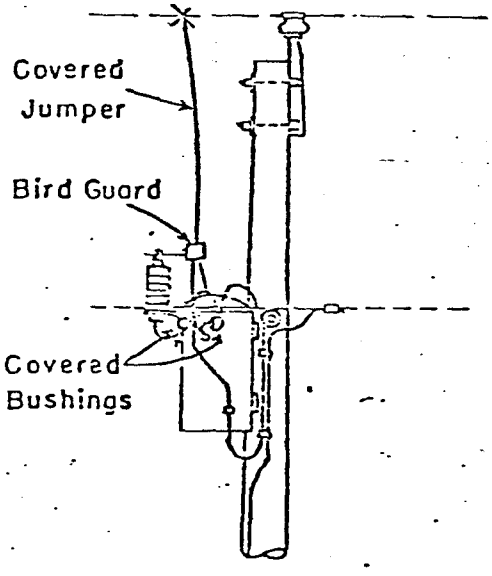

Figure 4

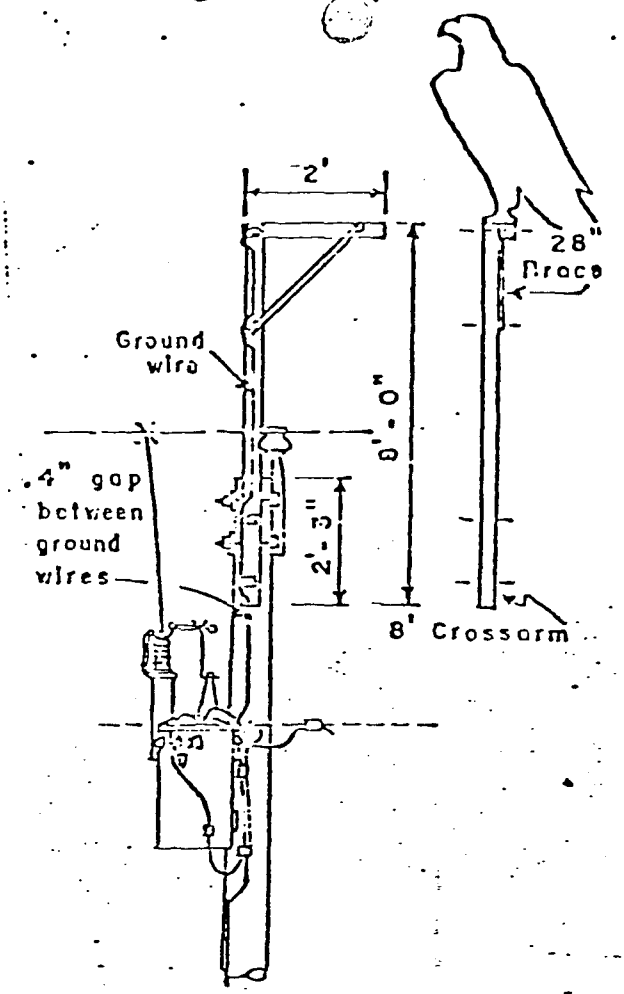

Figure 5

Where the nature of the equipment installation is such that it is not feasible to cover exposed energized parts, a perch as shown in Figure 5 could be installed. Eagles normally use such a perch in preference to the equipment tank. Alternatively the transformer could be changed to a self-protecting type which would permit covering the primary energized parts as in Figure 4.

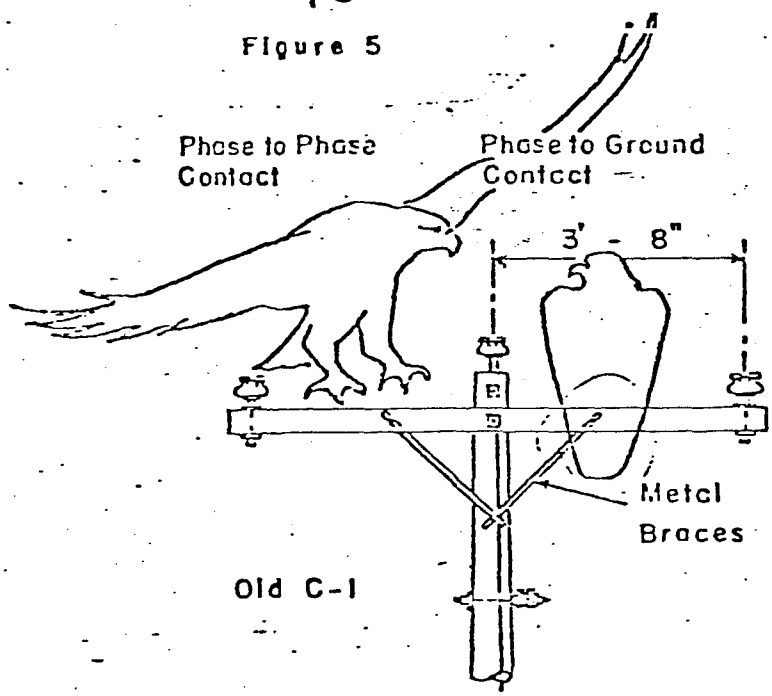

Old single-arm assemblies

Figure 6

Three-Phase Tangent Construction

Of all REA poles in common use, pre 1962 REA standard construction is potentially the most hazardous to large birds because

- its crossarm construction is particularly attractive, as a perch, to large birds.
- its relatively flat construction permits phase-to-phase contact as the bird approaches the crossarm.
- the use of steel crossarm braces in close proximity to the pole ground wire facilitates phase-to-ground contact.

Both of these types of contact are illustrated in Figure 6.

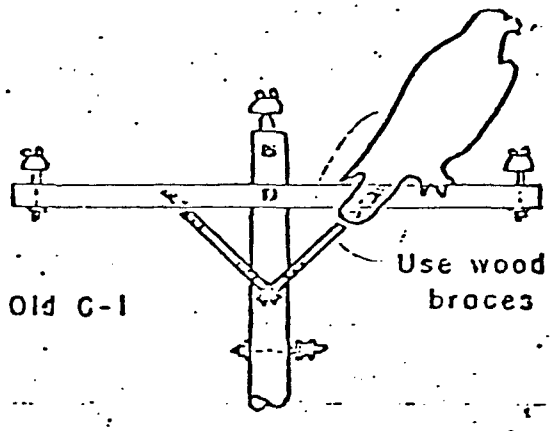

Figure 7

Bird electrocutions may be minimized on pre 1962 structures by changing the steel braces to wood braces as shown in Figure 7 and by

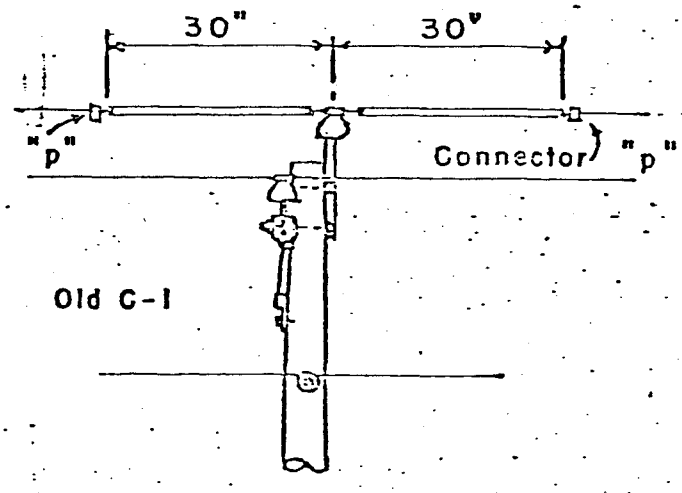

Figure 8

covering the center phase for about 30 inches on either side of the insulator as shown in Figure 8. Any material used for covering the conductor need provide for only momentary contacts. However, it should not have any seams, cracks or openings on its top or sides through which a spark may jump. Several manufacturers provide "tree guards" which seem adequate for this purpose. Guards may be restrained from moving into the span by the use of a connector or other obstruction.

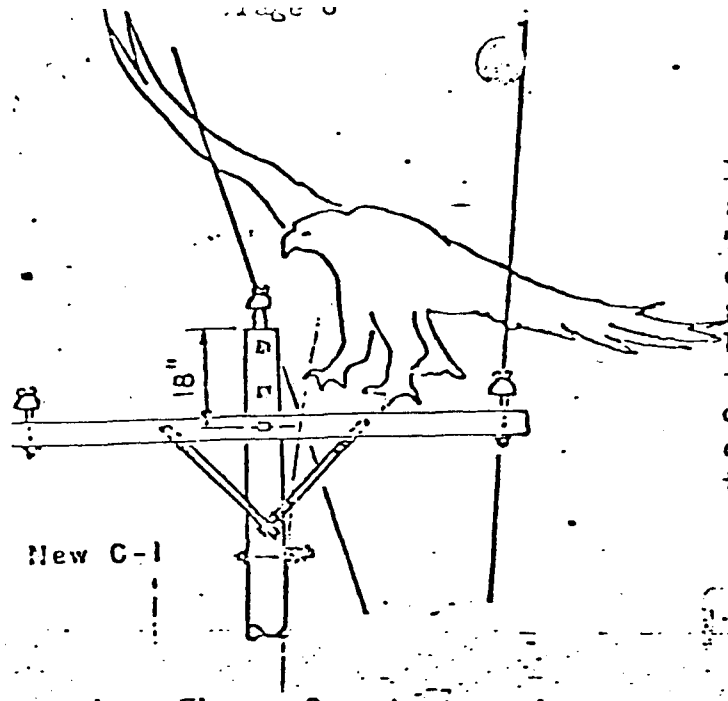

Figure 9

Figure 9 shows the post 1962 REA standard three-phase construction. The use of wood braces and the lowered crossarm should make this structure relatively safe for large birds. However, in the event electrocutions are experienced, the center phase should be covered as described in the preceding paragraph to avoid phase-to-phase contacts.

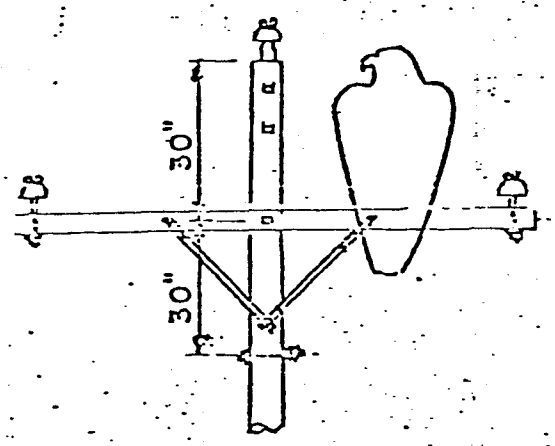

Proposed three-phase line assembly for eagle areas.

Figure 10

New Three-Phase Construction

For new construction in areas frequented by eagles and other large birds, it is recommended that the crossarm and neutral conductor be lowered as shown in Figure 9. All other features of standard construction including positioning of the ground wire and the use of wood crossarm braces should be as shown in REA standard drawings.

Other New Construction

Single-phase construction should be in accordance with Figure 2.

Single-phase transformer installations should make use of transformers [illegible]

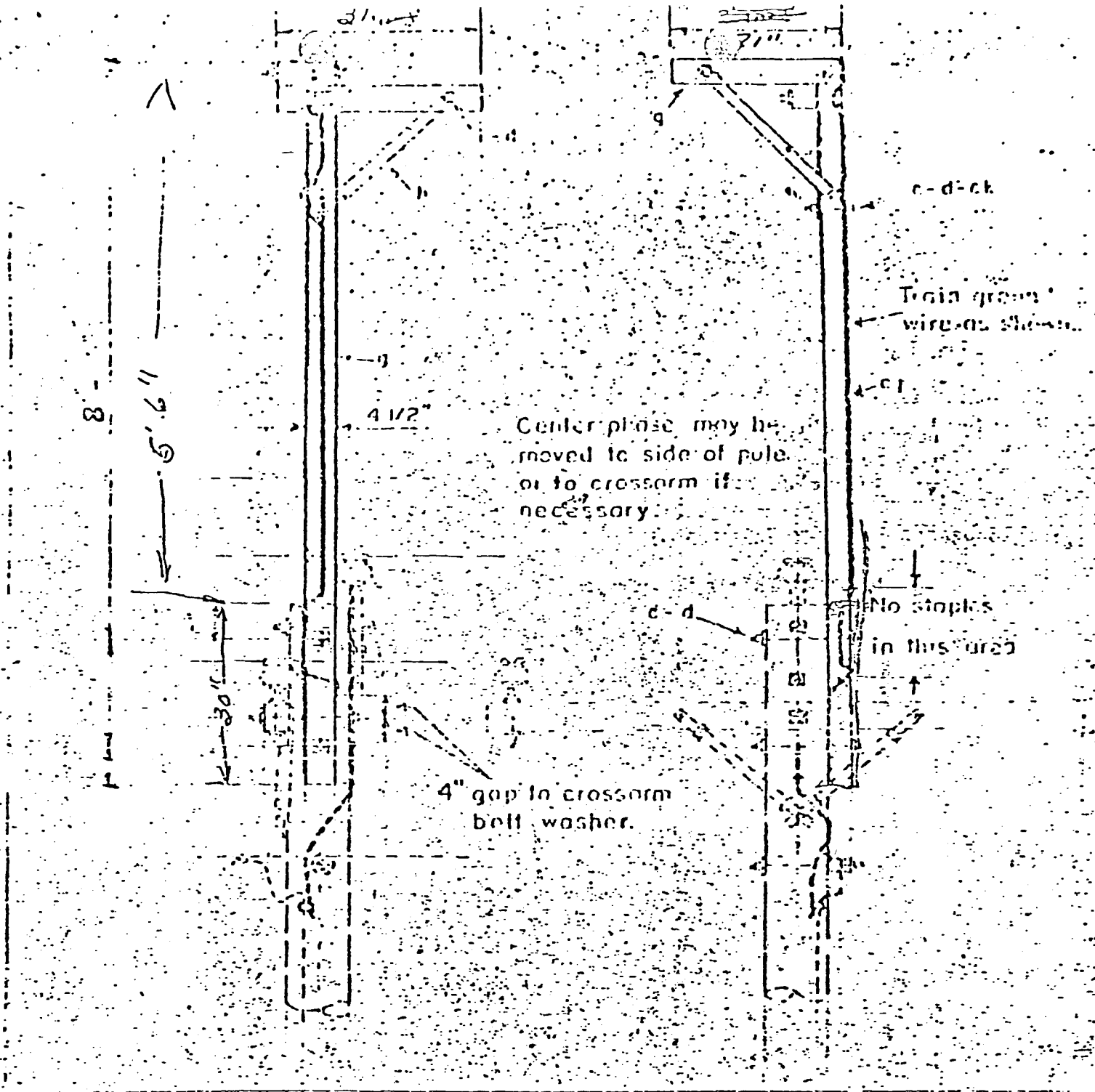

ITEM NO.	MATERIAL	ITEM NO.	MATERIAL
[illegible]	1 Washer, round 1 3/8" dia.	i	2 Bolt, carriage, 3/8" x 4 1/2"
[illegible]	6 Bolt, carriage, 1/2" or 5/8" x reqd. length		
[illegible]	10 Washer, 2 1/4" square	ai	Staples, as req'd.
[illegible]	2 Crossarm, pieces, 2' to 3'-0"	cj	Ground wire, as required
[illegible]	1 Crossarm, 3 1/2" x 4 1/2" x 8'-0"	ek	Lockouts
[illegible]	2 Brace, flat, 25"		

EAGLE PERCH

DRAFT

SCOTT M. MATHESON
Governor

GORDON E. HARMSTON
Executive Director,
NATURAL RESOURCES

CLEON B. FEIGHT
Director

STATE OF UTAH
DEPARTMENT OF NATURAL RESOURCES
DIVISION OF OIL, GAS, AND MINING
1588 West North Temple
Salt Lake City, Utah 84116
(801) 533-5771

OIL, GAS, AND MINING BOARD

CHARLES R. HENDERSON
Chairman

JOHN L. BELL
C. RAY JUVELIN
THADIS W. BOX
CONSTANCE K. LUNDBERG
EDWARD T. BECK
E. STEELE McINTYRE

June 23, 1980

Mr. Trevor G. Whiteside
Senior Mine Engineer
Valley Camp of Utah, Inc.
Scofield Route
Helper, Utah 84526

RE: Fish and Wildlife Consultation
Pusuant to UMC 783.20
Belina #1 & #2 and Utah #2 Mines
ACT/007/001 and ACT/007/014

Dear Mr. Whiteside,

Enclosed are the guidelines which were compiled by the Division of Oil, Gas, and Mining as a result of the consultation with the agencies ahving jurisdiction over fish and wildlife and habitats in the mine plan area. Please be reminded of the requirements of the UMC 771.23 (c) when writing your permit application.

The consultation process has established that there is a need to designate an ad acent area at the Belina and Utah mines due to effects likely to occur to fish and wildlife resources (UMC 783.20). Accordingly, Valley Camp shall provide a plan for minimizing impacts and disturbances to fish and wildlife, utilizing impact control measures, management techniques and monitoring methods for the protection of riparian areas (UMC 784.21). The operator is also obligated to locate and operate haul and access roads so as to avoid or minimize impacts to important fish and wildlife (UMC 817.97 (d)(1). The Division therefore designates the geographic area, from South Forth in Eccles Canyon up to the ridgeline on each side of the canyon and then downstream to the confluence of Mud and Eccles Creak and from that point downstream along Mud Creek for a width of 500 feet to the lowest water monitoring station(VC-1), as an adjacent area for purposes of fish and wildlife and habitat protection, (a map is enclosed of this area).

Valley camp therefore must address, in the Fish and Wildlife Plan section of the permit application, plans to rectify any existing problems involving coal and earht being dozed in Eccles Creek and overleaded coal being lost into the road along Eccles and Mud Creek. Mitigating measures must address means to prevent overloading of haul trucks, stabilization of steep walls and the design of a year-round road maintenance program to eliminate a continual transfer of sediment materials into the Creek bed.

Guidelins for monitoring the effectiveness of this fish and wildlife plan, as outlined above, are set forth in the attached guidelines document for the Valley Camp Mines. Also enclosed for your use in preparation of the Fish and Wildlife plan for UMC 784.21 and for compliance with performance standard UMC 816.97 (c) are the guidelines for the design and construction of electric power lines.

Please be advised that the Division will not hesitate to take enforcement action on these matters.

The Forest Service has recommended that Valley Camp may find the E.I.S. by James J. Travis dated 5-26-76, to be useful in that it contains a discussion of impacts to fish and wildlife as a result of mining.

Should any questions arise concerning these matters please call me.

Sincerely,

MARY ANN WRIGHT
RECLAMATION BIOLOGIST

MAW/lml
Enclosure: Wildlife and Vegetation Guidelines and Map
CC: U.S. Forest Service, Price - w/enc.
Division of Wildlife Resources - w/enc.
Fish and Wildlife Service - w/enc.
Mr. Bill Haynes - Valley Camp - w/enc.

Belina #1 & #2 and Utah #2 Mines
ACT/007/001 and ACT/007/014
Valley Camp of Utah Inc.

Guidelines for Fish and Wildlife and Habitat
Information Pursuant to UMC 783.20

Aquatic Studies

1. Stream Macroinvertebrate, Fish and Habitat Study

Area: Eccles Creek from South Fork downstream to the confluence with Mud Creek and Mud Creek from the confluence with Eccles Creek downstream to the lowest Valley Camp Monitoring station (VC-1).

Time: Assemble all prior data on this area collected by public and private studies and utilize this information as a data base.

Purpose: Document and describe the condition of the creeks up to the time of permit application. Provide data on the macroinvertebrate and fish populations, noting species composition, diversity, size and age of fish, and other pertinent data. Describe the habitat quality in terms of temperature, gradient, water quantity, water quality (parameters measured under the present water monitoring program are acceptable), and stream bottom composition. Describe any past perturbations such as culverting, land slides, etc. and note the dates of these occurences.

Submit to the Division biologist the results of monthly water quality analysis, adding additional station at the location of Coastal States Energy Company's water monitoring station CS-6. If measures described in the Valley Camp Fish and Wildlife Plan are found to be inadequate or are not being evacuated properly, then the Division may require Valley Camp to provide further monitoring data which would more fully demonstrate impacts to the streams by mining activities. Additionally, the Division may issue violations for impacts to riparian areas.

Terrestrial Studies

1. Raptor Survey

Area: Any areas of proposed new disturbance plus a zone of 1 km radius surrounding these sites. The route of the conveyor belt must be surveyed in areas where it will pass through presently undisturbed areas. For any undisturbed areas for new roads or portals, surveys will have to be conducted.

Time: March through June, the breeding season.

Purpose: Assess occurrence and location of any raptor breeding sites. Map all sitings and nests in the pertinent area.

2. Migratory Birds of High Federal Interest Survey

state of utah

DIVISION OF WILDLIFE RESOURCES

DOUGLAS F. DAY
Director

EQUAL OPPORTUNITY EMPLOYER

1596 West North Temple/Salt Lake City, Utah 84116/801-533-9333

January 12, 1981

Reply To SOUTHEASTERN REGIONAL OFFICE
455 West Railroad Avenue, Box 840, Price, Utah 84501
(801) 637-3310

Mr. William H. Haynes
Valley Camp of Utah Inc.
Scofield Route
Helper, Utah 84526

Attention: Mr. Trevor G. Whiteside

Dear Bill:

I want to take this opportunity to extend thanks for the assistance Trev has provided our staff in becoming familiar with existing and planned surface facilities on the area encompassed by Valley Camp's Utah No. 2 and Belina No. 1 and 2 mining projects. I believe that you will find the enclosed information helpful at filing a mine and reclamation plan.

In response to your request for wildlife resource information (UMC 783.20) and the Division's recommendations concerning a wildlife plan (UMC 784.21) to accompany a permit application, the attached map, data and comments are provided. The wildlife resource information is consistant with the formal guidelines for acquisition of fish, wildlife and habitat information provided your Company by Utah's Division of Oil, Gas and Mining. In instances where your Company was required to provide for study beyond existing information, such findings need be merged with our report.

The Division Publication No. 78-16 "Species List of Vertebrate Wildlife that Inhabit Southeastern Utah" represents a low level of study. It adequately identifies potential occurrence; season of use (avifauna only); relative abundance as unknown, common, uncommon, rare, occasional, accidental, endangered, threatened, limited and extirpated; status as protected or non-protected; population trend and prefered habitat use area for each species of wildlife that can be found in the biogeographic area in which the project lies. This publication was earlier provided to Mr. Glenn Phillips who has represented Valley Camp of Utah Inc. through Golder Associates. It should be an appendix to the application so that all reviewers can be adequately appraised of the regional as well as site specific situation as it relates to wildlife.

Please note that the enclosed wildlife plan represents our recommendations; Utah's Division of Oil, Gas and Mining is the regulatory authority for approval of the mining and reclamation plan. Implementation of the recommended

GOVERNOR
Scott M. Matheson

DEPT. OF NATURAL RESOURCES
Gordon E. Harmston
Exec. Director

WILDLIFE BOARD
Roy L. Young — Chairman
Lewis C. Smith
L. S. Skaggs
Warren T. Harward
Chris P. Jouflas

wildlife plan should assist your Company in compliance with performance standards UMC 817.97.

Thank you for an opportunity to assist your Company in complying with the State's permenent program for coal mining and reclamation and the resultant protection of Utah's wildlife resources. If the Division can be of any further service, please coordinate with our Regional Resource Analyst (Phone 801-637-3310) as appropriate.

Sincerely,

John Livesay by Larry B Dalton

John Livesay, Supervisor
Southeastern Region

JL:LBD:gp

Attachment

cc: Darrell Nish
Clark Johnson
Cleon B. Feight

APPENDIX H

Plant Community Characteristics and Productivity and Tree Growth Data

See Vegetation Map G, Volume IV for Locations

Table 3. Plant Community Characteristics

SITE 1a. LOCATION VEGETATION

Lower Conveyor Validation Spruce-fir

	Taxa	% Cover	% Freq.	% Comp.
Grasses	Stipa columbiana	20.4	55	38
	Carex sp.	9.0	50	17
	Stipa lettermanii	6.2	10	12
	Agropyron caninum	6.1	30	11
	Poa pratensis	2.9	20	6
	Bromus anomalus	1.1	20	2
	Poa sp.	.1	5	T
	Total Grass	45.8		86
Forbs	Helenium hoopesii	3.2	10	6
	Collinsia parviflora	.9	10	2
	Galium boreale	.8	5	2
	Silene menziesii	.8	5	2
	Machaeranthera bigelovii	.2	10	T
	Viola adunca	.2	10	T
	Gayophytum ramosissimum	.1	5	T
	Epilobium angustifolium	.1	5	T
	Penstemon watsonii	.1	5	T
	Taraxacum officinale	.1	5	T
	Cryptantha crassisepala	.1	5	T
	Total Forbs	6.6		12
Browse	Mahonia repens	.9	10	2
	Total Browse	.9		2
	Totals	53.3		100

Table 4. Tree Productivity

SITE 1a. VEGETATION

Lower Conveyor Validation Spruce-fir

LOCATION

Taxa	Mean Distance	Relative Frequency	Density per Acre
Picea pungens Populus tremuloides	11.6 ft	40 % 60 %	129.5 194.3

Taxa	< 1" Diameter		> 1" Diameter				
	<3' tall	>3' tall	1"-3"d.	3"-6"d.	6"-12"d.	12"-15"d.	>15"d.
Picea pungens Populus tremuloides			2 3	5 13	4 6	2	3

Table 5. Plant Community Characteristics

SITE 1b. LOCATION VEGETATION

Lower Conveyor Reference Spruce-fir

	Taxa	% Cover	% Freq.	% Comp.
Grasses	Stipa columbiana	19.6	55	53
	Agropyron caninum	5.8	15	16
	Carex sp.	5.0	30	14
	Bromus carinatus	.8	5	2
	Poa pratensis	.8	5	2
	Stipa lettermannii	.8	5	2
	Total Grass	32.8		89
Forbs	Silene menziesii	2.6	10	7
	Lathyrus lanzwertii	.9	5	2
	Stellaria jamesiana	.2	10	1
	Viola adunca	.2	15	1
	Galium boreale	.1	5	T
	Hackelia floribunda	.1	5	T
	Helenium hoopesii	.1	5	T
	Total Forbs	4.2		11
Browse				
	Totals	37.0		100

Table 6. Tree Productivity

SITE 1b. VEGETATION Spruce-fir

Lower Conveyor Reference

LOCATION

Taxa	Mean Distance	Relative Frequency	Density per Acre
Picea pungens Populus tremuloides	11.8 ft	52% 48%	162.9 150.4

Taxa	< 1" Diameter		> 1" Diameter				
	< 3' tall	> 3' tall	1"-3"d.	3"-6"d.	6"-12"d.	12"-15"d.	> 15"d.
Picea pungens Populus tremuloides			4 1	3 12	5 6	2	7

Table 7. Plant Community Characteristics

SITE 2a.

LOCATION

Lower Conveyor
Validation Opening

VEGETATION

Aspen Opening
(Stinging nettles)

	Taxa	% Cover	% Freq.	% Comp.
Grasses	Poa pratensis	24.5	80	16
	Stipa lettermannii	7.8	25	5
	Stipa columbiana	7.6	20	5
	Agropyron caninum	5.0	10	3
	Carex geyeri	4.4	10	3
	Bromus carinatus	1.9	5	1
	Agropyron smithii	.8	5	T
	Muhlenbergia richardsonis	.8	5	T
	Total Grass	52.8		33
Forbs	Urtica dioica	53.4	95	34
	Collinsia parviflora	19.1	45	12
	Lappula occidentalis	10.0	60	6
	Gayophytum ramosissimum	8.2	45	6
	Helenium hoopesii	8.0	15	5
	Cryptantha sp.	4.8	25	3
	Cirsium foliosum	1.6	15	1
	Total Forbs	105.1		67
Browse				
	Totals	157.9		100

Table 8. Plant Community Characteristics

SITE 2b.

LOCATION

Lower Conveyor
Reference Opening

VEGETATION

Aspen opening
(Stinging nettles)

	Taxa	% Cover	% Freq.	% Comp.
Grasses	Poa pratensis	42.1	90	26
	Stipa lettermannii	4.9	25	3
	Muhlenbergia richardsonis	3.1	5	2
	Koeleria cristata	1.9	5	1
	Agropyron caninum	1.6	15	1
	Total Grass	53.6		33
Forbs	Helenium hoopesii	39.5	80	24
	Urtica dioica	31.6	50	19
	Gayophytum ramosissimum	14.8	65	9
	Lappula occidentalis	6.2	55	4
	Cirsium foliosum	6.0	40	4
	Collinsia parviflora	4.0	35	3
	Polygonum kelloggii	2.6	10	2
	Polygonum sawatchense	1.8	20	1
	Cryptantha sp.	1.2	25	1
	Achillea millefolium	.1	5	T
	Phacelia heterophylla	.1	5	T
	Polygonum aviculare	.1	5	T
	Total Forbs	108.0		67
Browse	Artemisia cana	.8	5	T
	Total Browse	.8		0
	Totals	162.4		100

Table 9. Plant Community Characteristics

SITE 3a. LOCATION VEGETATION

Lower Conveyor Validation Aspen

	Taxa	% Cover	% Freq.	% Comp.
Grasses	Poa pratensis	32.2	40	24
	Stipa columbiana	21.9	65	17
	Stipa lettermannii	11.8	45	9
	Carex sp.	10.9	35	8
	Agropyron caninum	7.1	25	6
	Agropyron dasystachyum	5.8	15	4
	Muhlenbergia richardsonis	.8	5	1
	Total Grass	90.5		69
Forbs	Helenium hoopesii	16.9	55	13
	Cirsium foliosum	12.1	50	9
	Gayophytum ramosissimum	3.9	10	3
	Cryptantha crassisepala	.9	10	1
	Penstemon watsonii	.9	10	1
	Polygonum sawatchense	.9	10	1
	Vicia americana	.8	30	1
	Arabis sp.	.1	5	T
	Fragaria virginiana	.1	5	T
	Stellaria jamesiana	.1	5	T
	Total Forbs	36.7		29
Browse	Populus tremuloides	.9	10	1
	Symphoricarpos oreophilus	.8	5	1
	Total Browse	1.7		2
	Totals	128.9		100

Table 10.

Tree Productivity

SITE 3a.

Lower Conveyor Validation

LOCATION

VEGETATION

Aspen

Taxa	Mean Distance	Relative Frequency	Density per Acre
Populus tremuloides	8.3 ft	100%	633.1

Taxa	< 1" Diameter		> 1" Diameter				
	<3' tall	>3' tall	1"-3"d.	3"-6"d.	6"-12"d.	12"-15"d.	>15"d.
Populus tremuloides				28	12		

Table 11. Plant Community Characteristics

SITE 3b. LOCATION VEGETATION

Lower Conveyor Reference Aspen

	Taxa	% Cover	% Freq.	% Comp.
Grasses	Stipa lettermannii	25.0	65	27
	Stipa columbiana	20.9	55	22
	Poa pratensis	19.0	45	20
	Agropyron caninum	10.1	25	10
	Carex sp.	7.8	45	8
	Bromus carinatus	3.9	10	4
	Bromus anomalus	1.9	5	2
	Koeleria cristata	.8	5	T
	Stipa comata	.8	5	T
	Total Grass	90.2		93
Forbs	Helenium hoopesii	2.6	10	3
	Cirsium foliosum	.9	20	1
	Gayophytum ramosissimum	.8	5	1
	Vicia americana	.5	20	T
	Taraxacum officinale	.2	5	T
	Achillea millefolium	.1	5	T
	Silene menziesii	.1	5	T
	Total Forbs	5.2		5
Browse	Mahonia repens	.8	5	1
	Symphoricarpos oreophilus	.8	5	1
	Total Browse	1.6		2
	Totals	97.0		100

Table 12. — Grazing Productivity

SITE 3b.	LOCATION	VEGETATION
Lower Conveyor Reference		Aspen

PLOT SIZE: 0.96 sq. ft.

	Taxa	Dry Wt. Prod.	% Comp.
Grasses	Stipa lettermannii	7.6	20
	Poa pratensis	6.8	18
	Agropyron caninum	1.4	T
	Carex sp.	.9	2
	Stipa columbiana	.4	1
	Muhlenbergia richardsonis	T	T
	Total Grasses	17.1	44
Forbs	Cirsium foliosum	11.7	30
	Helenium hoopesii	9.5	25
	Gayophytum ramosissimum	T	T
	Polygonum sawatchense	T	T
	Total Forbs	21.2	55
Browse	Populus tremuloides	.6	1
	Total Browse	.6	1
	Totals	38.9	100
	Est. Potential Prod. for site	389 lbs/ac.	

Table 13.

Tree Productivity

SITE 3b.

Lower Conveyor Reference

LOCATION

VEGETATION

Aspen

Taxa	Mean Distance	Relative Frequency	Density per Acre
Populus tremuloides	9.4 ft	100%	496 ft

Taxa	< 1" Diameter		> 1" Diameter				
	< 3' tall	> 3' tall	1"-3"d.	3"-6"d.	6"-12"d.	12"-15"d.	> 15"d.
Populus tremuloides				16	24		

Table 14. — Plant Community Characteristics

SITE 4a. LOCATION VEGETATION

Conveyor Line Validation — Sagebrush

	Taxa	% Cover	% Freq.	% Comp.
Grasses	Poa ampla	7.7	20	7
	Poa fendleriana	7.0	27	7
	Agropyron spicatum	6.1	67	6
	Carex sp.	3.8	13	4
	Bromus carinatus	1.3	7	1
	Poa secunda	1.3	3	1
	Stipa viridula	1.3	3	1
	Bromus reflexa	.5	3	T
	Stipa comata	.5	3	T
	Bromus tectorum	.1	3	T
	Total Grass	29.6		27
Forbs	Geranium richardsonii	2.7	13	3
	Penstemon sp.	2.2	10	2
	Aster sp.	1.5	10	1
	Stellaria jamesiana	1.5	10	1
	Cirsium sp.	1.3	10	1
	Viola sp.	.3	10	T
	Brickellia sp.	.1	3	T
	Delphinium sp.	.1	3	T
	Oenothera sp.	.1	3	T
	Total Forbs	9.8		8
Browse	Symphoricarpos oreophilus	25.7	67	25
	Artemisia tridentata	21.2	47	21
	Amelanchier alnifolia	6.3	13	6
	Rosa woodsii	6.3	3	6
	Purshia tridentata	5.4	10	5
	Prunus virginiana	2.2	7	2
	Chrysothamnus viscidiflorus	.5	3	T
	Total Browse	67.6		65
	Totals	107.0		100

Table 15. Grazing Productivity

SITE 4a. LOCATION VEGETATION

Conveyor Line Validation — Sagebrush

PLOT SIZE: 0.96 sq. ft.

	Taxa	Dry Wt. Prod.	% Comp.
Grasses	Agropyron spicatum	7.2	8
	Poa ampla	4.8	5
	Arrhenatherum elatius	4.5	5
	Poa fendleriana	1.2	1
	Carex sp.	1.0	1
	Total Grasses	18.7	20
Forbs	Penstemon sp.	2.5	3
	Aster sp.	.8	1
	Senecio sp.	.8	1
	Polemonium	.2	T
	Gilia sp.	T	T
	Total Forbs	4.3	5
Browse	Artemisia tridentata	40.6	44
	Symphoricarpos oreophilus	12.6	13
	Purshia tridentata	10.0	11
	Chrysothamnus viscidiflorus	3.2	3
	Rosa woodsii	2.8	3
	Pachystima myrsinites	.9	1
	Total Browse	70.1	75
	Totals	93.1	100
	Est. Potential Prod. for Site	931.0 lbs/ac.	

Table 16. Plant Community Characteristics

SITE 4b. LOCATION VEGETATION

Conveyor Line Reference Sagebrush

	Taxa	% Cover	% Freq.	% Comp.
Grasses	Agropyron spicatum	26.0	76	21
	Poa ampla	6.0	25	5
	Poa fendleriana	3.3	20	2
	Stipa lettermanii	1.7	3	1
	Carex sp.	1.3	7	1
	Bromus anomalus	.1	3	1
	Stipa comata	T	2	T
	Poa pratensis	T	2	T
	Total Grass	37.4		31
Forbs	Penstemon watsonii	4.8	15	4
	Lupinus argenteus	2.4	6	2
	Aster sp.	1.1	3	1
	Brickellia sp.	1.0	2	1
	Castilleja linearis	.5	5	T
	Cirsium foliosum	.4	6	T
	Collinsia parviflora	.2	5	T
	Erigeron speciosus	.2	7	T
	Gayophytum nuttallii	.2	6	T
	Cryptantha crassisepala	.1	3	T
	Aster sp.	T	2	T
	Chaenactis sp.	T	2	T
	Epilobium sp.	T	2	T
	Comandra umbellata	T	2	T
	Grindelia sp.	T	2	T
	Eriogonum umbellatum	T	2	T
	Sisymbrium sp.	T	2	T
	Total Forbs	10.9		8
Browse				
	Totals (Continued)			

Table 17. Plant Community Characteristics

SITE 4b. LOCATION VEGETATION

Conveyor Line Reference (Continued) Sagebrush

	Taxa	% Cover	% Freq.	% Comp.
Grasses	Artemisia tridentata	34.2	62	26
	Purshia tridentata	19.1	40	15
	Symphoricarpos oreophilus	17.6	45	14
	Amelanchier alnifolia	5.2	20	4
	Chrysothamnus viscidiflorus	2.3	5	2
	Rosa woodsii	.7	10	T
	Artemisia sp.	.6	2	T
	Mahonia repens	.5	5	T
	Cercocarpus montanus	T	T	T
	Total Browse	81.2		61
Forbs				
Browse				
	Totals	129.5		100

Table 18.— Grazing Productivity

SITE 4b. LOCATION VEGETATION

Conveyor Route Reference — Sagebrush

PLOT SIZE: 0.96 sq. ft.

	Taxa	Dry Wt. Prod.	% Comp.
Grasses	Poa ampla	20.7	16
	Agropyron spicatum	17.4	13
	Poa fendleriana	2.0	1
	Carex sp.	.2	T
	Total Grasses	40.3	30
Forbs	Penstemon sp.	3.0	2
	Lupinus sp.	1.5	1
	Aster sp.	.5	T
	Senecio sp.	.2	T
	Total Forbs	5.2	3
Browse	Artemisia tridentata	51.5	39
	Purshia tridentata	30.4	22
	Symphoricarpos oreophilus	4.9	3
	Chrysothamnus viscidiflorus	4.8	3
	Amelanchier alnifolia	.4	T
	Total Browse	92.0	67
	Totals	137.5	100
	Est. Potential Prod. for Site	1375.0 lbs/ac.	

Table 19. Plant Community Characteristics

SITE 5a. LOCATION VEGETATION

Whiskey Canyon Conveyor Validation — Aspen

	Taxa	% Cover	% Freq.	% Comp.
Grasses	Agropyron caninum	36.8	90	23
	Poa pratensis	16.5	65	10
	Bromus carinatus	13.6	45	8
	Carex geyeri	8.2	25	5
	Elymus glaucus	6.2	10	4
	Stipa lettermanii	2.6	10	2
	Stipa columbiana	1.7	50	1
	Total Grass	85.6		53
Forbs	Lathyrus lanzwertii	7.9	60	5
	Achillea millefolium	7.5	60	5
	Helenium hoopesii	6.5	25	4
	Silene menziesii	5.8	40	4
	Smilacina stellata	4.0	35	3
	Penstemon watsonii	3.2	10	2
	Senecio serra	2.6	10	2
	Geranium fremontii	2.1	35	1
	Potentilla gracilis	1.9	5	1
	Heliomerus multiflora	1.6	15	1
	Fragaria virginiana	1.1	20	1
	Hackelia floribunda	1.0	15	T
	Erysimum asperum	.8	30	T
	Polygonum sawatchense	.4	15	T
	Stellaria jamesiana	.4	15	T
	Thalictrum fendleri	.4	15	T
	Polemonium foliosissimum	.1	5	T
	Collinsia parviflora	.1	10	T
	Total Forbs	47.4		29
Browse	Symphoricarpos oreophilus	22.4	65	14
	Abies lasiocarpa	6.1	10	4
	Populus tremuloides	.8	5	T
	Total Browse	29.3		18
	Totals	162.3		100

Table 20. — Grazing Productivity

SITE 5a.	LOCATION	VEGETATION
Whiskey Canyon Conveyor Validation		Aspen

PLOT SIZE: 0.96 sq. ft.

	Taxa	Dry Wt. Prod.	%Comp.
Grasses	Agropyron caninum	4.9	8
	Stipa lettermannii	2.4	4
	Poa pratensis	2.2	4
	Carex sp.	1.5	3
	Bromus carinatus	1.4	2
	Total Grasses	12.4	21
Forbs	Geranium fremontii	2.5	4
	Hackelia floribunda	1.9	3
	Achillea millefolium	1.0	2
	Lathyrus lanzwertii	.5	1
	Silene menziesii	.5	1
	Polemonium sp.	.4	1
	Heliomeris multiflora	.2	T
	Penstemon watsonii	.2	T
	Chenopodium fremontii	T	T
	Collinsia parviflora	T	T
	Erysimum asperum	T	T
	Fragaria virginiana	T	T
	Galium sp.	T	T
	Osmorhiza depauperata	T	T
	Stellaria jamesiana	T	T
	Taraxacum officinale	T	T
	Thalictrum fendleri	T	T
	Polygonum sawatchense	T	T
	Total Forbs	7.2	12
Browse	Symphoricarpos oreophilus	39.6	66
	Abies lasiocarpa	.3	1
	Total Browse	39.9	67
	Totals	59.5	100
	East. Potential Prod. for site	595 lbs/ac.	

Table 21.

Site 5a.

Whiskey Canyon Conveyor Validation

LOCATION

Tree Productivity

VEGETATION

Aspen

Taxa	Mean Distance	Relative Frequency	Density per Acre
Populus tremuloides	16.9	88	134.1
Abies concolor		12	18.3

Taxa	< 1" Diameter		> 1" Diameter				
	<3' tall	>3' tall	1"-3"d.	3"-6"d.	6"-12"d.	12"-15"d.	>15"d.
Populus tremuloides			3	18	13		
Abies concolor			2		2		1

Table 22. Plant Community Characteristics

SITE 5b. LOCATION VEGETATION

Whiskey Canyon Conveyor Reference — Aspen

	Taxa	% Cover	% Freq.	% Comp.
Grasses	Agropyron caninum	36.1	90	23
	Bromus carinatus	23.0	70	15
	Poa pratensis	16.2	65	10
	Stipa columbiana	11.1	40	7
	Stipa lettermanii	3.9	15	2
	Bromus ciliatus	1.9	5	1
	Elymus glaucus	.8	5	T
	Carex sp.	.8	5	T
	Total Grass	93.8		58
Forbs	Lathyrus lanzwertii	15.6	70	9
	Smilacina stellata	13.5	40	8
	Geranium fremontii	5.6	30	3
	Mertensia ciliata	4.5	15	3
	Achillea millefolium	3.4	30	2
	Fragaria virginiana	3.1	30	2
	Aster chilensis	3.0	20	2
	Senecio serra	2.2	15	1
	Hackelia floribunda	1.1	20	1
	Helenium hoopesii	.8	5	T
	Thalictrum fendleri	.8	5	T
	Heliomeris multiflora	.4	15	T
	Stellaria jamesiana	.2	10	T
	Descurainia californica	.1	5	T
	Erysimum asperum	.1	5	T
	Total Forbs	54.4		31
Browse	Symphoricarpos oreophilus	14.1	40	9
	Populus tremuloides	2.8	15	2
	Total Browse	16.9		11
	Totals	165.2		100

Table 23.

SITE 5b.

Whiskey Canyon
Reference

LOCATION

Tree Productivity

VEGETATION

Aspen

Taxa	Mean Distance	Relative Frequency	Density per Acre
Populus tremuloides Abies Concolor	11.04 ft	95% 5%	339.3 17.9

Taxa	< 1" Diameter		> 1" Diameter				
	< 3' tall	> 3' tall	1"-3"d.	3"-6"d.	6"-12"d.	12"-15"d.	> 15"d.
Populus tremuloides Abies concolor			2	21	17		

Table 24. Plant Community CHaracteristics

SITE 6. LOCATION VEGETATION

Whiskey Canyon Conveyor Reference — Spruce-fir

	Taxa	% Cover	% Freq.	% Comp.
Grasses	Stipa columbiana	3.9	10	7
	Agropyron caninum	1.1	20	2
	Bromus carinatus	1.0	15	2
	Poa pratensis	1.0	15	2
	Carex sp.	.1	5	T
	Total Grass	7.1		13
Forbs	Lathyrus lanzwertii	10.8	30	19
	Arnica cordifolia	5.4	40	10
	Pyrola secunda	2.0	10	4
	Aquilegia coerulea	1.5	10	3
	Fragaria virginiana	1.5	35	3
	Helenium hoopesii	1.5	10	3
	Thalictrum fendleri	1.0	15	2
	Viola adunca	1.0	20	2
	Osmorhiza depauperata	.9	10	2
	Aster engelmannii	.8	5	1
	Castilleja miniata	.8	5	1
	Smilacina stellata	.8	5	1
	Achillea millefolium	.6	25	1
	Mitella sp.	.4	15	T
	Geranium fremontii	.2	10	T
	Hackelia floribunda	.2	10	T
	Erigeron superbus	.1	5	T
	Stellaria jamesiana	.1	5	T
	Total Forbs	29.6		52
Browse	Shepherdia canadensis	6.9	15	12
	Abies lasiocarpa	6.6	25	12
	Symphoricarpos oreophilus	.2	10	11
	Pachystima myrsinites	.2	10	T
	Populus tremuloides	.2	10	T
	Total Browse	20.1		35
	Totals	56.8		100

Table 25.

SITE 6.

Whiskey Canyon Validation

LOCATION

Tree Productivity

VEGETATION

Spruce-fir

Taxa	Mean Distance	Relative Frequency	Density per Acre
Populus tremuloides	10.0	40%	173.4
Picea pungens		50%	216.8
Abies concolor		2%	8.7
Pseudotsuga menziesii		8%	34.7

Taxa	< 1" Diameter		> 1" Diameter				
	<3' tall	>3' tall	1"-3"d.	3"-6"d.	6"-12"d.	12"-15"d.	>15"d.
Populus tremuloides			1	10	5		
Picea pungens			3	10	4		3
Abies concolor					1		
Pseudotuga menziesii					2	1	

Table 26. Plant Community Characteristics

SITE 6b. LOCATION VEGETATION

Whiskey Canyon Conveyor Reference — Spruce-fir

	Taxa	% Cover	% Freq.	% Comp.
Grasses	Bromus ciliatus	1.0	15	3
	Total Grass	1.0		3
Forbs	Arnica cordifolia	5.6	35	20
	Fragaria virginiana	5.6	30	20
	Aquilegia coerulea	1.5	10	5
	Osmorhiza depauperata	1.5	35	5
	Thalictrum fendleri	.8	5	3
	Pyrola secunda	.5	20	2
	Mitella sp.	.4	15	1
	Silene menziesii	.2	10	1
	Viola adunca	.2	5	1
	Erigeron superbus	.1	5	T
	Geranium fremontii	.1	5	T
	Helenium hoopesii	.1	5	T
	Total Forbs	16.6		58
Browse	Mahonia repens	3.1	5	11
	Rosa woodsii	2.2	15	8
	Lonicera utahensis	1.9	5	6
	Vaccinium membranaceum	1.5	10	5
	Symphoricarpos oreophilus	.9	5	3
	Populus tremuloides	.8	5	3
	Abies lasiocarpa	.5	20	2
	Pachystima myrsinites	.2	10	1
	Total Browse	11.1		39
	Totals	28.7		100

Table 27.

SITE 6b.

Whiskey Canyon Reference

LOCATION

Tree Productivity

VEGETATION

Spruce-fir

Taxa	Mean Distance	Relative Frequency	Density per Acre
Populus tremuloides	9.9 ft	25%	110.8
Picea pungens		52%	230.6
Abies concolor		15%	66.5
Pseudotsuga menziesii		8%	35.5

Taxa	< 1" Diameter		> 1" Diameter				
	<3' tall	>3' tall	1"-3"d.	3"-6"d.	6"-12"d.	12"-15"d.	>15"d.
Populus tremuloides				8	2		
Picea pungens			4	5	7	2	3
Abies concolor			1		2	2	1
Pseudotsuga menziesii				1	2		

Table 28. Plant Community Characteristics

SITE 7. LOCATION VEGETATION

Portal Yard Reference — Spruce-fir

	Taxa	% Cover	% Freq.	% Comp.
Grasses	Bromus ciliatus	3.5	20	10
	Poa pratensis	1.1	20	3
	Bromus carinatus	.8	5	2
	Carex sp.	.4	15	1
	Total Grass	5.8		16
Forbs	Lupinus sp.	10.9	30	30
	Viola adunca	3.4	35	10
	Lathyrus lanzwertii	3.1	30	9
	Arnica cordifolia	2.8	15	7
	Osmorhiza depauperata	2.5	50	7
	Achillea millefolium	2.4	25	6
	Aquilegia coerulea	1.5	10	4
	Fragaria virginiana	1.2	25	3
	Erigeron superbus	.9	10	2
	Silene menziesii	.9	5	2
	Hackelia floribunda	.8	5	2
	Helenium hoopesii	.8	5	2
	Epilobium angustifolium	.1	5	T
	Ranunculus inamoenus	.1	5	T
	Taraxacum officinale	.1	5	T
	Total Forbs	31.5		84
Browse	Abies lasiocarpa	.1	5	T
	Sambucus racemosa	.1	5	T
	Total Browse	.2		0
	Totals	37.5		100

Table 29.

SITE 7.

Portal Yard Reference

LOCATION

Tree Productivity

VEGETATION Spruce-fir

Taxa	Mean Distance	Relative Frequency	Density per Acre
Abies concolor Picea pungens	12.3	60% 40%	173.1 115.4

Taxa	< 1" Diameter		> 1" Diameter				
	<3' tall	3' tall	1"-3"d.	3"-6"d.	6"-12"d.	12"-15"d.	>15"d.
Abies concolor				2	8	7	6
Picea pungens			1	4	6	4	2

Table 30. Plant Community Characteristics

SITE 8. LOCATION VEGETATION

Portal Yard Reference — Aspen

	Taxa	% Cover	% Freq.	% Comp.
Grasses	Bromus carinatus	33.5	75	31
	Agropyron caninum	23.0	70	21
	Poa pratensis	13.8	45	13
	Stipa lettermannii	13.1	25	12
	Poa reflexa	1.8	20	1
	Stipa columbiana	1.1	35	1
	Total Grass	86.3		79
Forbs	Lathyrus lanzwertii	7.8	75	7
	Galium bifolium	3.1	25	3
	Delphinium barbeyi	2.8	15	3
	Achillea millefolium	1.9	5	2
	Gayophytum ramosissimum	.9	10	1
	Helenium hoopesii	.9	10	1
	Senecio serra	.9	10	1
	Hackelia floribunda	.8	5	T
	Polygonum sawatchense	.5	20	T
	Osmorhiza occidentalis	.1	5	T
	Chenopodium fremontii	.1	5	T
	Cirsium foliosum	.1	5	T
	Collinsia parviflora	.1	5	T
	Descurainia californica	.1	5	T
	Nemophila breviflora	.1	5	T
	Total Forbs	20.2		18
Browse	Sambucus racemosa	3.1	5	3
	Total Browse	3.1		3
	Totals	109.6		100

Table 31. Grazing Productivity

SITE 8. LOCATION VEGETATION

Portal Yard Reference — Aspen

PLOT SIZE: 0.96 sq. ft.

	Taxa	Dry Wt. Prod.	% Comp.
Grasses	Bromus carinatus	9.5	13
	Carex sp.	9.0	12
	Stipa lettermannii	4.4	6
	Agropyron caninum	3.9	5
	Poa pratensis	1.5	2
	Stipa columbiana	1.4	2
	Total Grasses	29.7	40
Forbs	Delphinium occidentale	12.6	18
	Hackelia floribunda	8.1	11
	Lathyrus lanzwertii	7.0	9
	Helenium hoopesii	5.0	7
	Senecio serra	2.2	3
	Collinsia parviflora	T	T
	Descurainia californica	T	T
	Erysimum asperum	T	T
	Galium sp.	T	T
	Gayophytum ramosissimum	T	T
	Nemophila breviflora	T	T
	Polygonum sawatchense	T	T
	Total Forbs	34.9	48
Browse	Sambucus racemosa	7.5	10
	Populus tremuloides	1.8	2
	Total Browse	9.2	12
	Totals	73.8	100
	Est. Potential Prod. for Site	738.0 lbs/ac.	

Table 32. Tree Productivity

SITE 8. Portal Yard Reference

LOCATION Above Yard

VEGETATION Aspen

Taxa	Mean Distance	Relative Frequency	Density per Acre
Populus tremuloides	26.3	100%	63.1

Taxa	< 1" Diameter		> 1" Diameter				
	< 3' tall	> 3' tall	1"-3"d.	3"-6"d.	6"-12"d.	12"-15"d.	> 15"d.
Populus tremuloides				6	22	8	4

TABLE 33.

Summary of Tree Growth Data of the Valley Camp Proposed Lease Area

Location	Species	Av. Diam., In.	Av. Ht., Ft.	Av. Age	Growth, Diam. /yr., mm.
Lower Canyon	Spruce	10.8	37	54	.38
Lower Canyon	Aspen	7.4	32	54*	.22*
Whiskey Canyon	Spruce	13.1	51	74	.34
Whiskey Canyon	Fir	6.2	48	79	.27
Whiskey Canyon	Aspen	-	-	53	.24
Portal Area	Aspen	10.7	42	44	.50
Portal Area	Spruce	10.0	49	53	.38
Portal Area	Fir	14.0	64	65	.48

*Estimated due to partially rotted cores.

APPENDIX I

Species Lists and Classifications of Wildlife

Vertebrate Species of Southeastern Utah

publ. no. 78-16

SPECIES LIST OF VERTEBRATE WILDLIFE

THAT INHABIT SOUTHEASTERN UTAH

Compiled by

Larry B. Dalton
C. Brent Farnsworth
Randall B. Smith
R. Craig Wallace
Roger B. Wilson
Samuel C. Winegardner

PUBLICATION NO. 78-16

UTAH STATE DIVISION OF WILDLIFE RESOURCES

Douglas F. Day, Director

Copyright © 1978 Division of Wildlife Resources

ACKNOWLEDGMENTS

Agencies and individuals that have contributed information on species distribution within the southeastern region are acknowledged. Bureau of Land Management and U.S. Forest Service biologists provided information concerning local sightings and distribution of wildlife species. Species lists obtained from Arches and Canyonlands National parks were also helpful. Within the Utah Division of Wildlife Resources, local conservation officers and wildlife biologists provided valuable information on species within their districts or areas of experience. Thanks go to other Division personnel who assisted with review of this document.

The status and population trend for individual species is a product of the experience of the authors and others who have professional experience with the wildlife resource in southeastern Utah.

Larry B. Dalton
C. Brent Farnsworth
Randall B. Smith
R. Craig Wallace
Roger B. Wilson
Samuel C. Winegardner

TABLE OF CONTENTS

Page

INTRODUCTION 1

SPECIES LIST 3
Fishes 3
Amphibians 6
Reptiles 8
Birds 14
Mammals 48

SUMMARY OF HIGH INTEREST SPECIES 68

LITERATURE CITED 69

LIST OF TABLES

Page

Table 1. List of Game Species and Region of Inhabitation within Utah 63
Big Game 63
Fishes 63
Furbearers 64
Migratory Game Birds 64
Small Game - Mammals 65
Small Game - Upland Birds 66

Table 2. Classification of the 466 Species of Vertebrate Wildlife. 67

SPECIES LIST OF VERTEBRATE WILDLIFE THAT INHABIT SOUTHEASTERN UTAH

Utah is believed to be inhabited by 734 species of vertebrate wildlife. Four hundred forty-five of these species are protected: 2 amphibians, 2 reptiles, 26 mammals, 58 fish and 357 birds. One hundred of the protected species are game species: 10 species of big game; 20, fish; 10, furbearers; 43, migratory game birds; 5, small game mammals; and 12, upland, small game birds. Table 1 provides a comparison of inhabitation by game species between Utah Division of Wildlife Resource's five regions.

Southeastern Utah is inhabited by 466 species of vertebrate wildlife in six biogeographic areas (Table 2). Three hundred forty-three of these species are protected: 2 amphibians, 26 mammals, 38 fish and 277 birds. Seventy-nine of the protected species that inhabit southeastern Utah are game species: 9 species of big game; 13, game fish; 9, furbearers, 35, migratory game birds; 4, small game mammals; and 9, upland, small game birds.

Southeastern Utah has been divided into six biogeographic areas. Each area allows an overlap of wildlife species that inhabit contiguous low and high elevation areas. This procedure was utilized to reduce any controversy that would normally arise from a "sharp line" drawn on a map.

A- Wasatch Plateau extending east from Skyline Drive to Highway 10 and bounded on the north by Highway 6 and on the south by Interstate 70.
B- West Tavaputs Plateau including all drainages into the Price River drainage from Soldier's Summit east along Reservation Ridge and including the drainages into Argyle, Nine Mile and Minnie Maud creeks; bounded on the east by the Green River and south and west by Highway 6.
C- East Tavaputs Plateau bounded on the east by the Colorado-Utah state line; on the south by Interstate 70; on the west by the Green River and on the north by Uintah-Ouray Indian Reservation and the Uintah-Grand county line.
D- San Rafael Swell and San Rafael Desert bounded by Highway 6 on the north; Highway 10 on the west; the Green River on the east and the Emery-Wayne county line on the south.
E- Henry Mountains and Burr Desert bounded on the north by Emery-Wayne county line; the Green and Colorado rivers on the east; Lake Powell on the south and Capitol Reef National Park and the Waterpocket Fold on the west.
F- Mountains and deserts of Grand and San Juan counties south of Interstate Highway 70 and north of the San Juan River bounded on the east by the Utah-Colorado border and on the west by the Green and Colorado rivers and Lake Powell.

Each species is listed by common name followed by the generic and specific nomenclature. The status for each species was determined by the authors after evaluation and consultation from several sources. The listing for mammals was developed from Sparks (1974), Burt and Grossenheider (1976) and Durrant (1952). The primary sources consulted in compiling the bird list were Behle and Perry (1975) and Hayward et al. (1976) although, Peterson (1969), Robbins et al. (1966) and Udvardy and Rayfield (1977) were also used.

Holden (1973), Bailey et al. (1970), Eddy (1969) and Sigler and Miller (1963) were consulted for preparation of the list of fishes.

The status of reptiles and amphibians was determined through discussion with local herpetologists. The phylogenetic listing is after Stebbins (1966). Tanner (1975) was consulted for species inhabiting Utah.

The following code letters are given for each species to describe its status.

K Status unknown - It is believed that these species are present, but little is known of their population dynamics.
C Common - These species are widespread and abundant.
U Uncommon - These species are widespread, but not abundant.
R Rare - These species are seldom identified during any one year.
O Occasional - These species are periodically identified during a long term period--10-50 years.
A Accidental - Distribution for these species does not normally include this area. Sightings are as far between as 50 to 100 years.
E Endangered - These species are endangered with extinction or extirpation from wildland in Utah.
T Threatened - These species are threatened with becoming endangered in Utah.
L Limited - These species are common but restricted to a particular use area or habitat type in Utah.
X Extirpated - These species have disappeared from wildland habitats in Utah.
P Protected - These species are protected by state or federal laws in Utah.
N Nonprotected - These species are not protected by any laws in Utah.

The following terminology is used to describe the seasonal status for avian species.

Transient - These species pass through southeastern Utah twice a year during their migratory travels.

Resident - These species occur yearlong in southeastern Utah.

Summer Resident - These species breed in southeastern Utah and migrate elsewhere for the winter.

Winter Resident - These species breed elsewhere but winter in southeastern Utah.

Note, the species marked with an asteric (*) are of high interest to the State and those marked with an exclamation mark(!) have potential to inhabit the environs of the project area.

Species	Biogeographic Area Inhabited	Status	Population Trend	Habitat Use Area
Fishes -- 38 species in southeastern Utah				
Family Clupeidae				
Threadfin Shad (Dorosoma petenense)	E,F	L-P	Stable	Lake-pelagic areas
Family Salmonidae				
* Cutthroat Trout (Salmo clarki)	A,B,D,F	C-P	Stable	Lakes-rocky shores, deep pelagic water; river-pools, riffles, and overhanging banks
* Rainbow Trout (Salmo gairdneri)	A,B,E,F,	C-P	Stable	Lake-littoral and pelagic areas rivers-pools, riffles, overhanging banks
* Brown Trout (Salmo trutta)	A,B,E,F	C-P	Stable	Lake-pelagic and littoral areas rivers-pools, riffles, and overhanging banks
* Brook Trout (Salvelinus fontinalis)	A,F	L-P	Stable	Lake-pelagic and littoral areas
Family Esocidae				
* Northern Pike (Esox lucius)	E,F	L-P	Unknown	Lake-littoral areas with submerged trees and brush
Family Cyprinidae				
Longfin Dace (Agosia chrysogaster)	E,F	K-P	Unknown	Unknown
Carp (Cyprinus carpio)	A,B,C,D,E,F	C-P	Stable	Lakes-littoral areas; quiet water areas in rivers, ponds, sloughs, creeks, and irrigation ditches
Utah Chub (Gila atraria)	A,B	L-P	Abundant	Irrigation ditches, ponds, sloughs, creeks, rivers, and lakes

Species	Biogeographic Area Inhabited	Status	Population Trend	Habitat Use Area
* Leatherside Chub (*Gila copei*)	A,E	C-P	Stable	Pool and riffle areas
* Humpback Chub (*Gila cypha*)	B	E-P	Decreasing	Eddies and backwaters
* Bonytail Chub *Gila elegans*)	B,C,F	E-P	Decreasing	Main channels of large rivers
Roundtail Chub (*Gila robusta*)	B,C,D,E,F	C-P	Stable	Riffles and stagnant backwaters
Red Shiner (*Notropis lutrensis*)	B,C,D,E,F	C-P	Increasing	Riffles, pools, backwaters, and eddies
San Shiner (*Notropis stramineus*)	F	C-P	Increasing	Riffles, pools, backwaters, and eddies
Fathead Minnow (*Pimephales promelas*)	B,C,D,E,F	C-P	Stable	Pools and backwaters
* Colorado Squawfish (*Ptychocheilus lucius*)	B,C,D,E,F	E-P	Decreasing	Slow waters, eddies, backwaters, and large pools
* Longnose Dace (*Rhinichtys cataractae*)	A	U-P	Unknown	Pools and riffles
! Speckled Dace (*Rhinichtys osculus*)	A,B,C,D,E,F	C-P	Stable	Pools and riffles
Redside Shiner (*Richardsonius balteatus*)	A,B,D	C-P	Stable	Lakes, creeks and rivers
Family Catostomidae				
White Sucker (*Catostomus commersoni*)	E,F	U-P	Unknown	Unknown
Bluehead Sucker (*Catostomus discobolus*)	A,B,C,D,E,F	C-P	Stable	Pools, riffles and lakes

Species	Biogeographic Area Inhabited	Status	Population Trend	Habitat Use Area
Flannelmouth Sucker (Catostomus latipinnis)	B,C,D,E,F	C-P	Stable	Pools and riffles
! Mountain Sucker (Catostomus platyrhynchus)	A	L-P	Stable	Pools and riffles
* Humpback Sucker (Xyrauchen texanus)	B,C,D,E,F	T-P	Decreasing	Large rivers with strong currents
Family Ictaluridae				
* Black Bullhead (Ictalurus melas)	B,C,D,E,F	C-P	Stable	Pools, quiet water and lakes
* Yellow Bullhead (Ictalurus natalis)	E,F	R-P	Stable	Quiet water areas and lakes
* Channel Catfish (Ictalurus punctatus)	B,C,D,E,F	C-P	Stable	Pools, riffles, quiet water areas and lakes
Family Cyprinodontidae				
Plains Killifish (Fundulus kansae)	F	R-P	Stable	Quiet water areas
Family Poeciliidae				
Mosquito fish (Gambusia affinis)	F	R-P	Stable	Quiet water areas
Family Cottidae				
* Mottled Sculpin (Cottus bairdi)	A	C-P	Stable	Rocky riffles and pool areas
Family Percichtyidae				
* Striped Bass (Morone saxatilis)	E,F	C-P	Increasing	Lake-pelagic areas
Family Centrarchidae				
Green Sunfish (Lepomis cyanellus)	B,C,D,E,F	C-P	Stable	Quiet backwaters and lakes
* Bluegill (Lepomis macrochirus)	E,F	C-P	Stable	Lakes-littoral areas with rocky shores and submerged brush

Species	Biogeographic Area Inhabited	Status	Population Trend	Habitat Use Area
* Largemouth Bass (*Micropterus salmoides*)	A,B,C,D,E,F	C-P	Stable	Rivers-quiet water areas; lakes-littoral rocky areas, with submerged brush
* Black Crappie (*Pomoxis nigromaculatus*)	E,F	C-P	Stable	Lake-littoral zone around submerged brush and trees, and pelagic areas
Family Percidae				
* Perch (*Perca flavescens*)	F	U-P	Unknown	Unknown
* Walleye (*Stizostedion vitreum*)	E,F	C-P	Stable	Lake-deep water around rocky bottoms
Amphibians -- 11 species in southeastern Utah				
Family Ambystomatidae				
! * Tiger Salamander (*Ambystoma tigrinum*)	A,B,C,D,E,F	C-P	Unknown	Quiet water of ponds, reservoirs, lakes, temporary rain pools and streams from arid sagebrush plains to rolling grasslands, mountain meadows and forests
Family Pelobatidae				
! Great Basin Spadefoot Toad (*Scaphiopus intermontanus*)	A,B,C,D,E,F	C-N	Unknown	Sagebrush flats, pinion-juniper woodlands to high elevations in spruce-fir communities

Species	Biogeographic Area Inhabited	Status	Population Trend	Habitat Use Area
Western Spadefoot Toad (Scaphiopus hammondi)	F	K-N	Unknown	Washes, alkali flats, foothills, mountain valleys, in open vegetation and shortgrass, where soil is sandy and/or gravelly
Family Bufonidae				
! Western Toad (Bufo boreas)	A	K-N	Unknown	Desert streams, springs, grasslands, woodlands, and mountain meadows
Red Spotted Toad (Bufo punctatus)	D,E,F,	C-N	Unknown	Open grassland and rocky canyons
! Woodhouse's Toad (Bufo woodhousei)	A,B,C,D,E,F	C-N	Unknown	Grassland, sagebrush flats, woods, desert streams, valleys, flood plains, farms, and city backyards
Great Plains Toad (Bufo cognatus)	C,D,E,F,	C-N	Unknown	Prairies, deserts, quiet water of streams, grass-lands and sagebrush plains
Family Hylidae				
! Chorus Frog (Pseudacris triseriata)	A,B,C,D,F	C-N	Unknown	Grassy pools, lakes, and marshes of prairies or mountains

Species	Biogeographic Area Inhabited	Status	Population Trend	Habitat Use Area
Canyon Tree Frog (Hyla arenicolor)	E,F	L-N	Unknown	Intermittant or permanent streams with rocky pools in canyons with cottonwoods or other trees
Family Ranidae				
*Bullfrog (Rana catesbeiana)	F	L-P	Unknown	Colorado River-usually quiet water where there is thick growth of aquatic vegetation
Leopard Frog (Rana pipiens)	A,B,C,D,E,F	C-N	Unknown	Springs, creeks, rivers, ponds, canals, reservoirs and wet meadows
Reptiles -- 36 species in southeastern Utah				
Family Iguanidae				
* Chuckwalla (Sauromalus obesus)	E,F	L-N	Unknown	Rocky hillsides
Collared Lizard (Crotaphytus collaris)	A,B,C,D,E,F	C-N	Unknown	Canyons, rocky gullies, mountain slopes and boulder strewn alluvial fans where vegetation is sparse
Leopard Lizard (Crotaphytus wislizenii)	A,B,C,D,E,F	C-N	Unknown	Arid and semi-arid plains with bunchgrass, sagebrush or other low desert shrub communities; avoids dense vegetation
Lesser Earless Lizard (Holbrookia maculata)	F	K-N	Unknown	Washes, sandy stream banks and sand dunes on shortgrass prairie and farmlands

Species	Biogeographic Area Inhabited	Status	Population Trend	Habitat Use Area
! Eastern Fence Lizard (Sceloporus undulatus)	A,B,C,D,E,F	C-N	Unknown	Forest, woodlands, prairie, brushy flatlands, sand dunes, rocky hillsides and farmlands
Desert Spiny Lizard (Sceloporus magister)	D,E,F	C-N	Unknown	Shadscale deserts, pinion-juniper woodland, willows and cottonwoods.
! Sagebrush Lizard (Sceloporus graciosus)	A,B,C,D,E,F	C-N	Unknown	Variety of habitat types; sagebrush, pinion-juniper, low desert shrub and rocklands
! Tree Lizard (Urosaurus ornatus)	A,B,C,D,E,F	C-N	Unknown	Trees and rocks
! Side-blotched Lizard (Uta stansburiana)	A,B,C,D,E,F	C-N	Unknown	Inhabits a variety of habitat types; sandy washes with scattered rocks and low growing shrubs
Desert Horned Lizard (Phrynosoma platyrhinos)	E	K-N	Unknown	Along washes at the edge of dunes in saltbrush and sagebrush areas
! Short-horned Lizard (Phrynosoma douglassi)	A,B,C,D,E,F	C-N	Unknown	Desert grassland, sagebrush, pinion-juniper, pine-spruce and spruce-fir associations, extending from desert shrub to mountain habitats

Species	Biogeographic Area Inhabited	Status	Population Trend	Habitat Use Area
Family Xantusiidae				
* Utah Night Lizard (Xantusia vigilis)	E,F	L-N	Unknown	Dead clumps of yucca plants and woodrat middens
Family Teiidae				
Plateau Whiptail (Cnemidophorus velox)	F	K-N	Unknown	Mountains in pinion-juniper woodland and lower edges of ponderosa pine forests
Western Whiptail (Cnemidophorus tigris)	A,B,C,D,E,F	C-N	Unknown	Desert shrub communities where plants are sparse and there are open areas for running
Family Scincidae				
Many-lined Skink (Eumeces multivirgatus)	E,F	K-N	Unknown	Shortgrass prairie that extends into the mountains; often vacant lots, city dumps and backyards
Western Skink (Eumeces skiltonianus)	C	K-N	Unknown	Grasslands, woodlands and forests in rocky habitat near streams with abundant cover
Family Boidae				
* Rubber Boa (Charina bottae)	A	C-N	Unknown	Grasslands, woodlands, and forests with rotting logs; often found under rocks and under the bark of fallen or standing dead trees

Species	Biogeographic Area Inhabited	Status	Population Trend	Habitat Use Area
Family Colubridae				
Smooth Green Snake (Opheodrys vernalis)	F	K-N	Unknown	Damp grassy environment
! Striped Whipsnake (Masticophis taeniatus)	A,B,C,D,E,F	C-N	Unknown	Brushlands, grasslands, sagebrush flats, pinion-juniper woodlands and open pine forests
Coachwhip (Masticophis flagellum)	E,F	K-N	Unknown	Utilizes a variety of habitats but avoids dense vegetation; rodent burrows, rocks and branches are used
! Racer (Coluber constrictor)	A,B,C,D,E,F	C-N	Unknown	Meadows, sparse brush and forest openings with semi-arid and moist areas; grassy places near rocks and logs are preferred
Corn Snake (Elaphe guttata)	F	K-N	Unknown	Stream and river bottoms, rocky wooded hillsides, coniferous forests, and farmland with rodent burrows, rocks and logs
! Ringneck Snake (Diadophis punctatus)	A	K-N	Unknown	Moist habitats usually in the mountains or along stream and river bottoms

Species	Biogeographic Area Inhabited	Status	Population Trend	Habitat Use Area
! Gopher Snake (Pituophis melanoleucus)	A,B,C,D,E,F	C-N	Unknown	Lowlands to high mountains including desert, coniferous forest and farmland types; grassland and open brushland are prescribed
! * Milk Snake (Lampropeltis triangulum)	A,B,C,F	K-N	Unknown	Variety of habitats from lowlands to mountains; rotten logs and stumps are preferred
Common Kingsnake (Lampropeltis getulus)	E,F	K-N	Unknown	Variety of habitats from lowlands to mountains with rock outcrops and clumps of vegetation under rotting logs or rocks
! * Sonora Mountain Kingsnake (Lampropeltis pyromelana)	A	K-N	Unknown	Mountains, pinion-juniper woodlands, mountain brush, coniferous forests with rocks, logs and dense clumps of vegetation
Long-nosed Snake (Rhinocheilus lecontei)	F	K-N	Unknown	Prairies, brushland and irrigated parts of deserts
! Western Terrestrial Garter Snake (Thamnophis elegans)	A,B,C,D,E,F	C-N	Unknown	Variety of terrestrial and aquatic habitats from lowlands to mountains
! Common Garter Snake (Thamnophis sirtalis)	A,F	K-N	Unknown	Variety of habitats, usually near water

Species	Biogeographic Area Inhabited	Status	Population Trend	Habitat Use Area
Black-necked Garter Snake (*Thamnophis cyrtopsis*)	F	K-N	Unknown	Desert and grasslands
Western Black-headed Snake (*Tantilla planiceps*)	E,F	K-N	Unknown	Grasslands, woodlands and deserts; often found under rocks and logs
! Night Snake (*Hypsiglena torquata*)	A,B,C,D,E,F	C-N	Unknown	Plains, sagebrush flats, desert and woodlands; often found under rocks and surface litter
Family Crotalidae				
Hopi Rattlesnake (*Crotalus viridis nuntius*)	E	U-N	Unknown	Prefers rock piles and rodent burrows on grasslands, brushlands, woodlands and forests; avoids sparsely vegetated deserts
Prairie Rattlesnake (*Crotalus viridis viridis*)	F	U-N	Unknown	Prefers rock piles and rodent burrows on grass-lands, woodlands and forests; avoids sparsely vegetated deserts
! Midget Faded Rattlesnake (*Crotalus viridis concolor*)	A,B,C,D,E,F	C-N	Unknown	Prefers rock piles and rodent burrows on grasslands, brushlands, woodlands and forests; avoids sparsely vegetated deserts

Species	Biogeographic Area Inhabited	Status	Population Trend	Habitat Use Area
Birds -- 278 species in southeastern Utah				
Order Gaviiformes				
Family Gaviidae				
Common Loon (Gavia immer)	A,B,C,D,E,F	U-P transient and winter resident	Stable	Lakes of coniferous forests, open lakes, reservoirs and bays
Order Podicipediformes				
Family Podicipedidae				
Horned Grebe (Podiceps auritus) *	A,B,C,D,E,F	R-P transient and summer resident	Stable	Lakes, ponds and reservoirs
Eared Grebe (Podiceps nigricollis)	A,B,C,D,E,F	C-P summer resident	Stable	Lakes, bays and reservoirs
* Western Grebe (Aechmophorus occidentalis)	A,B,C,D,E,F	C-P summer resident	Stable	Sloughs, bays and reservoirs and lakes with emergent vegetation for nesting
Pied-billed Grebe (Podilymbus podiceps)	A,B,C,D,E,F	C-P summer resident	Stable	Ponds, lakes, streams and marshes
Order Pelecaniformes				
Family Pelecanidae				
* White Pelican (Pelecanus erythrorhynchos)	A,B,C,D,E,F	L-P transient and summer resident	Stable	Larger shallow bodies of water and large rivers
Family Phalacrocoracidae				
* Double-crested Cormorant (Phalacrocorax auritus)	A,B,C,D,E,F	U-P summer resident	Stable	Bays, lakes and rivers

Species	Biogeographic Area Inhabited	Status	Population Trend	Habitat Use Area
Order Ciconiiformes				
Family Ardeidae				
!*Great Blue Heron (Ardea herodias)	A,B,C,D,E,F	C-P resident	Stable	Marshes, shallow reservoirs, rivers, streams, shores and irrigation ditches
Green Heron (Butorides striatus)	B,E,F	R-P transient	Unknown	Marshes, wooded streams, rivers, small ponds and lake margins
Cattle Egret (Bubulcus ibis)	E,F	O-P transient	Unknown	Marshes, lake margins, and irrigated lands
! Snowy Egret (Egretta thula)	A,B,C,D,E,F	C-P summer resident	Stable	Marshes, ponds, lake margins and irrigated land
Black-crowned Night Heron (Nycticorax nycticorax)	A,B,C,D,E,F	C-P summer resident	Stable	Marshes, lake margins and shores
Least Bittern (Ixobrychus exilis)	D,E,F	U-P transient	Unknown	Densely vegetated marshes
American Bittern (Botaurus lentinginosus)	A,B,C,D,E,F	U-P summer resident	Stable	Densely vegetated marshe
Family Ciconiidae				
Wood Stork (Mycteria americana)	D,E,F	O-P transient	Unknown	Marshes, ponds and lake margins
Family Threskiornithidae				
*White-faced Ibis (Plegadis chihi)	A,B,C,D,E,F	C-P summer resident	Increasing	Marshes and irrigated land

Species	Biogeographic Area Inhabited	Status	Population Trend	Habitat Use Area
Order Anseriformes				
Family Anatidae				
* Whistling Swan (Olor columbianus)	A,B,C,D,E,F	O-P winter resident C-P transient	Stable	Lakes, large rivers and fields
* Trumpeter Swan (Olor buccinator)	B,C,D,E,F	R-P transient	Unknown	Lakes and large rivers
* Canada Goose (Branta canadensis)	A,B,C,D,E,F	C-P resident and transient	Increasing	Lakes, bays, marshes, rivers and grainfields
*White-fronted Goose (Anser albifrons)	A,B,C,D,E,F	R-P transient	Stable	Marshes, fields, lakes and bays
*Snow Goose (Chen caerulescens)	A,B,C,D,E,F	U-P transient	Stable	Marshes, grainfields, reservoir, ponds and bays
* Ross' Goose (Chen rossii)	A,B,C,D,E,F	O-P transient	Stable	Marshes, grainfields, prairies, ponds and bays
! * Mallard (Anas platyrhynchos)	A,B,C,D,E,F	C-P resident and transient	Stable	Marshes, irrigated land, grainfields, ponds, rive lakes, bays and reservoi extending from lowlands mountains
! *Gadwall (Anas strepera)	A,B,C,D,E,F	C-P resident and transient	Stable	Lakes, ponds, rivers and marshes
! * Pintail (Anas acuta)	A,B,C,D,E,F	C-P resident and transient	Stable	Marshes, grainfields, ponds, lakes and reservoirs

Species	Biogeographic Area Inhabited	Status	Population Trend	Habitat Use Area
! *Green-winged Teal (Anas crecca)	A,B,C,D,E,F	C-P resident and transient	Stable	Marshes, lakes, ponds, rivers and bays
*Blue-winged Teal (Anas discors)	A,B,C,D,E,F	U-P resident and transient	Stable	Ponds and marshes
!*Cinnamon Teal (Anas cyanoptera)	A,B,C,D,E,F	C-P resident and transient	Stable	Stock ponds, rivers, marshes and lakes
*American Widgeon (Anas americana)	A,B,C,D,E,F	C-P resident and transient	Stable	Marshes, irrigated land, ponds, lakes and bays
* Northern Shoveler (Anas clypeata)	A,B,C,D,E,F	C-P resident and transient	Stable	Marshes, ponds and sloughs
!*Wood Duck (Aix sponsa)	A,B,C,D,E,F	R-P transient	Stable	Wooded rivers and ponds
*Redhead (Aythya americana)	A,B,C,D,E,F	C-P resident and transient	Stable	Marshes with some deep water, lakes and reservoirs
*Ring-necked Duck (Aythya collaris)	A,B,C,D,E,F	U-P transient	Stable	Coniferous lakes, wooded ponds, marshes and reservoirs
*Canvasback (Aythya valisineria)	A,B,C,D,E,F	C-P transient R-P summer resident	Stable	Marshes, lakes and reservoirs

Species	Biogeographic Area Inhabited	Status	Population Trend	Habitat Use Area
*Greater Scaup (Aythya marila)	A,B,C,D,E,F	U-P transient	Stable	Lakes, rivers and ponds
*Lesser Scaup (Aythya affinis)	A,B,C,D,E,F	C-P transient	Stable	Marshes, ponds and lakes
*Common Goldeneye (Bucephala clangula)	A,B,C,D,E,F	U-P transient	Stable	Lakes and rivers
*Bufflehead (Bucephala albeola)	A,B,C,D,E,F	U-P transient	Stable	Lakes, ponds and rivers
*White-winged Scoter (Melanitta deglandi)	D	O-P transient	Stable	Large lakes and reservoirs. Recorded occurrence at Desert Lake WMA
*Ruddy Duck (Oxyura jamaicensis)	A,B,C,D,E,F	C-P resident and transient	Stable	Marshes, ponds, rivers and reservoirs
*Hooded Merganser (Mergus cucullatus)	A,B,C,D,E,F	R-P transient	Stable	Wooded lakes, ponds, rivers and reservoirs
*Common Merganser (Mergus merganser)	A,B,C,D,E,F	C-P transient U-P winter resident	Stable	Wooded lakes and rivers in summer; in winter, open rivers, lakes and ponds
*Red-breasted Merganser (Mergus serrator)	A,B,C,D,E,F	C-P transient	Stable	Lakes, reservoirs and rivers

Species	Biogeographic Area Inhabited	Status	Population Trend	Habitat Use Area
Order Falconiformes				
Family Cathartidae				
!*Turkey Vulture (Cathartes aura)	A,B,C,D,E,F	C-P summer resident	Stable	Usually seen in sky or perched on dead trees, posts, carrion or on groun
California Condor (Gymnogyps californianus)	A,B,C,D,E,F	X-P	Extirpated	Usually seen in sky or perched on dead trees, posts, carrion or on groun
Family Accipitridae				
!*Goshawk (Accipiter gentilis)	A,B,C,D,E,F	U-P resident	Stable	Mountain woodlands
! *Sharp-shinned Hawk (Accipiter striatus)	A,B,C,D,E,F	U-P resident and transient	Stable	Forests, thickets, scruboak, desert riparian, mountain woodlands and aspen
!*Cooper's Hawk (Accipiter cooperii)	A,B,C,D,E,F	C-P summer resident and transient R-P winter resident	Stable	Broken woodlands, dry wooded canyons, riparian areas, pinion-juniper and conifers
!*Red-tailed Hawk (Buteo jamaicensis)	A,B,C,D,E,F	C-P resident	Stable	Open country, woodlands, mountains and deserts
*Red-shouldered Hawk (Buteo lineatus)	C,F	A-P transient	Unknown	Broken woodlands, primarily along lowland rivers and often close to cultivated fields
!* Swainson's Hawk (Buteo swainsoni)	A,B,C,D,E,F	U-P summer resident	Stable	Dry plains and rangeland with hills; open forest or alpine meadows with sparse trees

Species	Biogeographic Area Inhabited	Status	Population Trend	Habitat Use Area
* Rough-legged Hawk (Buteo lagopus)	A,B,C,D,E,F	C-P winter resident	Stable	Open country, woodlands, deserts and marshes
* Ferruginous Hawk (Buteo regalis)	A,B,C,D,E,F	U-P summer resident R-P winter resident	Stable	Open desert; infrequentl marshes and farmlands are utilized
! * Golden Eagle (Aquila chrysaetos)	A,B,C,D,E,F	C-P resident	Stable	Open mountains, foot-hills, canyons and deser
*Bald Eagle (Haliaeetus leucocephalus)	A,B,C,D,E,F	E-P winter resident	Increasing	Lakes, rivers and marshe surrounded by open country with available perching sites
! *Marsh Hawk (Circus cyaneus)	A,B,C,D,E,F	C-P resident	Stable	Marshes, fields and prairies
Family Pandionidae				
*Osprey (Pandion haliaetus)	A,B,C,D,E,F	U-P transient	Stable	Rivers, lakes and large bodies of water
Family Falconidae				
! *Prairie Falcon (Falco mexicanus)	A,B,C,D,E,F	C-P resident	Stable	Canyons, open habitat in mountains, plains and deserts
*Peregrine Falcon (Falco peregrinus)	A,B,C,D,E,F	E-P resident	Unknown	Canyons, high cliffs, rivers, marshlands and deserts
*Merlin (Falco columbarius)	A,B,C,D,E,F	C-P winter resident	Unknown	Open country and foot-hills; often associated with flocking passerine:

Species	Biogeographic Area Inhabited	Status	Population Trend	Habitat Use Area
! * American Kestrel (Falco sparverius)	A,B,C,D,E,F	C-P summer resident U-P winter resident	Stable	Open country, prairies, deserts, wooded streams, farmland and cities
Order Galliformes				
Family Tetraonidae				
! * Blue Grouse (Dendragapus obscurus)	A,B,C,D,E,F	C-P resident	Stable	Coniferous forests, aspen, mountain brush, open slash and burns
! * Ruffed Grouse (Bonasa umbellus)	A,B	C-P resident	Stable	Aspen and coniferous forests near stream courses
! *Sage Grouse (Centrocercus urophasianus)	A,B,C,F	C-P resident	Stable	Sagebrush plains associated with pasture lands; sagebrush parks associated with wet meadows
Family Phasianidae				
* California Quail (Lophortyx californicus)	A,B,D,E,F	C-P resident	Stable	Mountain brush, woodland edges and farmlands near river bottoms
* Gambels Quail (Lophortyx gambelii)	D,E,F	C-P resident	Stable	Desert thickets, usually near water
* Chukar (Alectoris chukar)	A,B,C,D,E,F	C-P resident	Stable	Rocky, grassy or brushy slopes in arid mountains and canyons
* Ring-necked Pheasant (Phasianus colchicus)	A,B,C,D,E,F	C-P resident	Decreasing	Irrigated cropland, pastureland, wetlands and desert wa[illegible]

Species	Biogeographic Area Inhabit	Status	Population Trend	Habitat Use ...ea
* White-winged Pheasant (Phasianus colchicus)	E,F	L-P resident	Decreasing	Irrigated cropland, pastureland and wetland: near Hanksville and Bluff, Utah
Family Meleagrididae				
*Merriam's Turkey (Meleagris gallapavo)	F	L-P resident	Stable	Mountainous regions with Ponderosa pine, mixed conifer and aspen woodlands or mountain brush
Order Gruiformes				
Family Gruidae				
*Sandhill Crane (Grus canadensis)	A,B,C,D,E,F	R-P transient	Stable	In winter, prairies grainfields and marshes in summer, mountain meadows and marshes
Family Rallidae				
*Virginia Rail (Rallus limicola)	A,B,C,D,E,F	C-P resident	Stable	Marshes
*Sora Rail (Porzana carolina)	A,B,C,D,E,F	U-P resident	Stable	Marshes and wet meadows
*Common Gallinule (Gallinula chloropus)	A,D	R-P transient	Unknown	Marshes, wet meadows, lakes with bulrush or cattails and sedges
*American Coot (Fulica americana)	A,B,C,D,E,F	C-P resident and transient	Stable	Ponds, lakes, marshes, and agricultural lands adjacent to wetland habitats.
Order Charadriiformes				
Family Charadriidae				
Semipalmated Plover (Charadrius semipalmatus)	A,B,C,D,E,F	U-P transient	Stable	Shores of marshes, reservoirs and mudflats

Species	Biogeographic Area Inhabited	Status	Population Trend	Habitat Use Area
*Snowy Plover (Charadrius alexandrinus)	A,B,C,D,E,F	U-P transient	Stable	Alkali and sand flats
! Killdeer (Charadrius vociferus)	A,B,C,D,E,F	C-P summer resident and transient	Stable	Fields and pastures, lawns, riverbanks, irrigated land, shores, plowed fields, alkali flats and gravel roads
! Mountain Plover (Charadrius montanus)	A,B,C,F	R-P transient	Stable	Semi-arid grasslands, plains and plateaus
American Golden Plover (Pluvialis dominica)	A,B,C,D,E,F	U-P transient	Stable	Prairies, mudflats and shores
Black-bellied Plover (Pluvialis squatarola)	A,B,C,D,E,F	C-P transient	Stable	Mudflats, open marshes and shores
Family Scolopacidae				
* Common Snipe (Capella gallinago)	A,B,C,D,E,F	C-P resident	Stable	Marshes, irrigation ditches, stream sides, and wet meadows
* Long-billed Curlew (Numenius americanus)	A,B,C,D,E,F	U-P summer resident and transient	Declining	Meadows, pastures and wetlands
* Willet (Catoptrophorus semipalmatus)	A,B,C,D,E,F	U-P summer resident and transient	Stable	Marshes, wet meadows and muddy shores
! Spotted Sandpiper (Tringa macularia)	A,B,C,D,E,F	C-P summer resident and transient	Stable	Pebbly lake shores, ponds and stream sides

Species	Biogeographi Area Inhabited	Status	Population Trend	Habitat Use Area
Solitary Sandpiper (Tringa solitaria)	A,B,C,D,E,F	U-P transient	Stable	Stream sides, ponds and marshes
Greater Yellowlegs (Tringa melanoleuca)	A,B,C,D,E,F	U-P transient	Stable	Open marshes, mudflats, streams and ponds
Lesser Yellowlegs (Tringa flavipes)	A,B,C,D,E,F	C-P transient	Stable	Marshes, mudflats, shores and pond edges
Pectoral Sandpiper (Calidris melanotos)	A,B,C,D,E,F	U-P transient	Stable	Prairie pools and marshy shores
Baird's Sandpiper (Calidris bairdii)	A,B,C,D,E,F	U-P transient	Stable	Rainpools, pond margins mudflats and shores
Least Sandpiper (Calidris minutilla)	A,B,C,D,E,F	C-P transient	Stable	Grassy marshes, rain-pools, shores and alkal mudflats
Western Sandpiper (Calidris mauri)	A,B,C,D,E,F	C-P transient	Stable	Shores, beaches, mud-flats and open marshes
Sanderling (Calidris alba)	A,B,C,D,E,F	U-P transient	Stable	Lake shores
Short-billed Dowitcher (Limnodromus griseus)	A,B,C,D,E,F	U-P summer resident and transient	Stable	Mudflats, open marshes and ponds
Long-billed Dowitcher (Limnodromous scolopaceus)	A,B,C,D,E,F	C-P summer resident and transient	Stable	Mudflats, shallow pools and wetlands

Species	Biogeographic Area Inhabited	Status	Population Trend	Habitat Use Area
Marbled Godwit (Limosa fedoa)	A,B,C,D,E,F	C-P transient	Stable	Grasslands and meadows near lakes and shallow lake margins
Family Recurvirostridae				
American Avocet (Recurvirostra americana)	A,B,C,D,E,F	C-P summer resident and transient	Stable	Marshes, mudflats, alkaline lakes, shallow ponds and sloughs
Black-necked Stilt (Himantopus mexicanus)	A,B,C,D,E,F	C-P summer resident and transient	Stable	Grassy marshes, alkali mudflats, pools and shallow lakes
Family Phalaropodidae				
Wilson's Phalarope (Phalaropus tricolor)	A,B,C,D,E,F	C-P summer resident and transient	Stable	Shallow lakes, marshes, pools, shores and mudflats
Northern Phalarope (Phalaropus lobatus)	A,B,C,D,E,F	C-P summer resident and transient	Stable	Lakes and ponds
Family Laridae				
Glaucous Gull (Larus hyperboreus)	D	R-P transient	Stable	Recorded using marshlands at Desert Lake WMA
Herring Gull (Larus argentatus)	A,B,C,D,E,F	U-P transient	Stable	Lakes, farmlands and dumps
! California Gull (Larus californicus)	A,B,C,D,E,F	C-P summer resident	Stable	Lakes, rivers, farmlands and dumps
! Ring-billed Gull (Larus delawarensis)	A,B,C,D,E,F	C-P winter resident	Stable	Lakes, rivers, refuse dumps, fields and cities

Species	Biogeographic Area Inhabited	Status	Population Trend	Habitat Use Area
Franklin's Gull (Larus pipixcan)	A,B,C,D,E,F	C-P summer resident	Stable	Prairies, marshes, lakes and plowed fields
! Bonaparte's Gull (Larus philidelphia)	A,B,C,D,E,F	U-P transient	Stable	Rivers, lakes and open marshes
Forsters Tern (Sterna forsteri)	A,B,C,D,E,F	C-P summer resident and transient	Stable	Marshes, lakes and reservoirs
Common Tern (Sterna hirundo)	A,B,C,D,E,F	U-P transient	Stable	Lakes and reservoirs
Black Tern (Chlidonias niger)	A,B,C,D,E,F	C-P summer resident and transient	Stable	Marshes, lakes and reservoirs
Caspian Tern (Hydroprogne caspia)	A,B,C,D,E,F	U-P transient	Stable	Large lakes and reservoirs
Order Columbiformes				
Family Columbidae				
! * Band-tailed pigeon (Columba fasciata)	A,E,F	U-P summer resident and transient	Stable	Forests, canyons and foothills near mountain brush (acorns) and agricultural lands
Rock Dove (Columba lavia)	A,B,C,D,E,F	C-N resident	Stable	Cities, farms and cliffs
! * Mourning Dove (Zenaida macroura)	A,B,C,D,E,F	C-P summer resident and transient	Stable	Farmlands, towns, open woods, grassland and deserts
White-winged Dove (Zenaidura asiatica)	E,F	A-P summer resident and transient	Unknown	Open woods and river bottoms

Species	Biogeographic Area Inhabited	Status	Population Trend	Habitat Use Area
Order Cuculiformes				
Family Cuculidae				
! * Yellow-billed Cuckoo (Coccyzus americanus)	A,B,C,D,E,F	K-P summer resident	Unknown	River thickets and willows
Order Strigiformes				
Family Tytonidae				
! * Barn Owl (Tyto alba)	A,B,C,D,E,F	K-P resident	Unknown	Woodlands, fields, farms, towns, canyons, cliffs and dirt banks
Family Strigidae				
! * Screech Owl (Otus asio)	A,B,C,D,E,F	U-P resident	Stable	Riparian communities and wooded canyons
! * Flammulated Owl (Otus flammeolus)	A,B,C,D,E,F	K-P summer resident	Unknown	Open pine and fir forests in mountains
! * Great Horned Owl (Bubo virginianus)	A,B,C,D,E,F	C-P resident	Stable	Ubiquitous
! * Pygmy Owl (Glaucidium gnoma)	A,B,C,D,E,F	K-P resident	Unknown	Wooded canyons in open coniferous, mixed woodlands and pinion-juniper forests
* Burrowing Owl (Speotyto cunicularia)	A,B,C,D,E,F	L-P resident	Declining	Open grassland, prairies, dikes, desert, farms and prairie dog colonies

Species	Biogeographic Area Inhabited	Status	Population Trend	Habitat Use Area
* Spotted Owl (Strix occidentalis)	C,E	K-P Unknown	Unknown	Wooded canyons with narrow side canyons in the desert
* Long-eared Owl (Asio otus)	A,B,C,D,E,F	C-P resident	Stable	River woodlands, pinion-juniper forests, willow thickets and Russian olive trees
* Short-eared Owl (Asio flammeus),	A,B,C,D,E,F	C-P resident	Stable	Marshes, prairies, irrigated land and open country with short vegetation
* Saw-whet Owl (Aegolius acadicus)	A,B,C,D,E,F	K-P resident	Stable	Forest, conifers and groves
Order Caprimulgiformes				
Family Caprimulgidae				
Common Nighthawk (Chordeiles minor)	A,B,C,D,E,F	C-P summer resident	Stable	Treeless plains to mountains with open pine woods; often seen in fli over country side or tov
Lesser Nighthawk (Chordeiles acutipennis)	E	R-P summer resident	Unknown	Arid open scrub, dry grasslands, pastures and desert washes
Poor-will (Phalaenoptilus nuttallii)	A,B,C,D,E,F	C-P summer resident	Stable	Arid uplands with open pinion-juniper and spars brush; riparian areas ar roadsides

Species	Biogeographic Area Inhabited	Status	Population Trend	Habitat Use Area
Order Apodiformes				
Family Apodidae				
!*Black Swift (*Cypseloides niger*)	A,B,C,D,E,F	U-P summer resident	Unknown	Open areas in mountain country
White-throated Swift (*Aeronautes saxatalis*)	A,B,C,D,F	C-P summer resident	Unknown	Open areas; wide ranging and breeds mainly in dry mountain canyons
Family Trochilidae				
! Black-chinned Hummingbird (*Archilochus alexandri*)	A,B,C,D,E,F	C-P summer resident	Unknown	Semi-arid country near water; semi-wooded canyons and slopes, mountain brush and riparian woodlands
! Broad-tailed Hummingbird (*Selasphorus platycercus*)	A,B,C,D,E,F	C-P summer resident	Unknown	Ubiquitous
! Rufous Hummingbird (*Selasphorus rufus*)	A,B,C,D,E,F	C-P summer resident and transient	Unknown	Forest edges, thickets in coniferous and deciduous forests, mountain brush and alpine meadows
! Calliope Hummingbird (*Stellula calliope*)	A,B,C,D,E,F	C-P summer resident	Unknown	High mountains, canyons and forest openings
! Rivoli's Hummingbird (*Eugenes fulgens*)	E,F	U-P summer resident	Unknown	High mountain forest openings, pine-oak forests and canyons

Species	Biogeographic Area Inhabited	Status	Population Trend	Habitat Use Area
Order Caraciiformes				
Family Alcedinidae				
!* Belted Kingfisher (Megaceryle alcyon)	A,B,C,D,E,F	U-P resident	Stable	Rivers, ponds and lakes
Order Piciformes				
Family Picidae				
! Common Flicker (Colaptes auratus)	A,B,C,D,E,F	C-P resident	Stable	Deciduous or mixed woodlands, open forest, farms towns, canyons and semi-open country
* Pileated Woodpecker (Dryocopus pileatus)	F	R-P resident	Unknown	Mature coniferous and mixed forests with many snags
Red-headed Woodpecker (Melanerpes erythrocephalus)	B	R-P resident	Unknown	Groves, farm country, riparian areas, towns and scattered trees
! Yellow-bellied Sapsucker (Sphyrapicus varius)	A,B,C,D,E,F	C-P resident	Unknown	In summer woodlands and aspen groves; in winter orchards and other trees
* Williamson's Sapsucker (Sphyrapicus thyroideus)	F	U-P summer resident	Unknown	Higher coniferous forests and burns
*Lewis Woodpecker (Asyndesmus lewis)	F	K-P summer resident and transient	Unknown	Scattered or logged forests, burns, cottonwood groves and ponderosa pine
! Hairy Woodpecker (Dendrocopos villosus)	A,B,C,D,E,F	C-P resident	Unknown	Mountain forests, woodlands and river groves

pecies	Biogeographic Area Inhabited	Status	Population Trend	Habitat Use Area
! Downy Woodpecker (Dendrocopos pubescens)	A,B,C,D,E,F	C-P resident	Unknown	Broken or mixed forest, willows, poplars, riparian woodlands, orchards and shade trees
! Northern Three-toed Woodpecker (Picoides tridactylus)	A,B,C,E,F	U-P resident	Unknown	Coniferous forests
Order Passeriformes				
Family Tyrannidae				
Western Kingbird (Tyrannus verticalis)	A,B,C,D,E,F	C-P summer resident	Stable	Open country with scattered trees, farms and roadsides
! Cassin's Kingbird (Tyrannus vociferans)	A,B,C,D,E,F	U-P summer resident	Unknown	Semi-open high country, scattered trees, pine-oak mountains and ranch groves
Eastern Kingbird (Tyrannus tyrannus)	A,B,C,D,E,F	C-P summer resident	Unknown	Wood edges, parklands, riparian areas, farms, shelter belts, orchards and roadsides
Ash-throated Flycatcher (Myiarchus cinerascens)	A,B,C,D,E,F	C-P summer resident	Stable	Semi-arid country, deserts, brush, pinion-juniper and open woods
Black Phoebe (Sayornis nigricans)	F	C-P resident	Unknown	Streamside woodlands, farmyards and towns with cliffs near water
Says Phoebe (Sayornis saya)	A,B,C,D,E,F	C-P resident	Unknown	Open arid country, deserts, bushy plains, prairie farms, canyon mouths and but

Species	Biogeographic Area Inhabited	Status	Population Trend	Habitat Use Area
! Willow (Traill's) Flycatcher (*Empidonax traillii*)	A,B,C,D,E,F	C-P summer resident	Unknown	Breeds in willow thickets in low valleys, along canyons or in high mountain meadows
! Hammond's Flycatcher (*Empidonax hammondii*)	A,B,C,E,F	U-P summer resident	Unknown	High coniferous forests
! Dusky Flycatcher (*Empidonax oberholseri*)	A,B,C,D,E,F	C-P summer resident	Unknown	Breeds in mountain brush with a scattering of trees
Gray Flycatcher (*Empidonax wrightii*)	A,B,C,D,E,F	K-P summer resident	Unknown	Breeds in sagebrush and pinion-juniper woodlands
! Western Flycatcher (*Empidonax difficilis*)	A,B,C,D,E,F	C-P summer resident	Unknown	Moist woods, mixed or coniferous forests, canyons, groves; must have water and shade
! Western Wood Peewee (*Contipus sordidulus*)	A,B,C,D,E,F	C-P summer resident	Unknown	Woodlands, pine-oak forests, open conifers and river groves
! Olive-sided Flycatcher (*Contopus borealis*)	A,B,C,D,E,F	U-P summer resident	Unknown	Coniferous forests, burns and clearings; in migration habitats used are varied; usually seen on tip of dead tree or branch

Species	Biogeographic Area Inhabited	Status	Population Trend	Habitat Use Area
Family Alaudidae				
! Horned Lark (Eremophila alpestris)	A,B,C,D,E,F	C-P resident	Unknown	Plains, desert, prairies, fields, sparse sagebrush flats, dirt roads, shores, alpine meadows, alkali flats and areas of sparse vegetation
Family Hirundinidae				
! Violet-green Swallow (Tachycineta thalasssina)	A,B,C,D,E,F	C-P summer resident	Unknown	Widespread when foraging; when nesting, open forests foothill woods, mountains, canyons, cliffs and towns
! Tree Swallow (Iridoprocne bicolor)	A,B,C,D,E,F	C-P summer resident	Unknown	Open country near water, marshes, mountain meadows, streams, lakes and wires; when nesting requires dead trees and snags, preferabl near water
! Bank Swallow (Riparia riparia)	A,B,C,D,E,F	C-P summer resident	Unknown	Usually near water; over fields, marshes, streams and lakes
! Rough-winged Swallow (Stelgidopteryx ruficollis)	A,B,C,D,E,F	C-P summer resident	Unknown	Near streams, lakes and washes
! Barn Swallow (Hirundo rustica)	A,B,C,D,E,F	C-P summer resident	Unknown	Open or semi-wooded country, farms, ranches, fields, marshes and lakes; usually near man's habitation

Species	Biogeographic Area Inhabited	Status	Population Trend	Habitat Use Area
! Cliff Swallow (Petrochelidon pyrrhonota)	A,B,C,D,E,F	C-P summer resident	Unknown	Open to semi-wooded country, neat farms, cliffs, canyons, rivers or lakes
! * Purple Martin (Progne subis)	A,B,C,E,F	U-P summer resident	Unknown	Open forests of aspen and conifers
Family Corvidae				
! Steller's Jay (Cyanocitta stelleri)	A,B,C,D,E,F	C-P resident	Unknown	Conifers and pine-oak forests
! Gray Jay (Perisorius canadensis)	A,B,C,E,F	R-P resident	Unknown	Coniferous forests
Scrub Jay (Aphelocoma coerulescens)	A,B,C,D,E,F	C-P resident	Unknown	Foothills, oaks, mountain brush, river woods and pinion-juniper woodlands
! Black-billed Magpie (Pica pica)	A,B,C,D,E,F	C-P resident	Unknown	Foothills, ranches, sage-brush, river thickets, shelterbelts and prairie brush
! Common Raven (Corvus corax)	A,B,C,D,E,F	C-P resident	Unknown	Mountains, deserts, canyons and cliffs
! Common Crow (Corvus brachyrhynchos)	A,B,C,D,E,F	O-P transient	Unknown	Deciduous, mixed and open coniferous woodlands farmlands and river grove
Pinion Jay (Gymnorhinus cyanocephala)	A,B,C,D,E,F	C-P resident	Unknown	Pinion-juniper woodlands, but ranges into sagebrush
! Clark's Nutcracker (Nucifraga columbiana)	A,B,C,E,F	C-P resident	Unknown	High mountains in conifer near tree line

Species	Biogeographic Area Inhabited	Status	Population Trend	Habitat Use Area
Family Paridae				
! Black-capped Chickadee (Parus atricapillus)	A,B,C,D,E,F	C-P resident	Unknown	In summer aspen-conifer, mixed woodlands and forest edges; in winter woodlands along valley streams and tree rows
! Mountain Chickadee (Parus gambeli)	A,B,C,D,E,F	C-P resident	Unknown	In summer mountain forests and conifers; in winter riparian woodlands at lower elevations
Plain Titmouse (Parus inornatus)	A,B,C,D,E,F	C-P resident	Unknown	Pinion-juniper woodlands
Bushtit (Psaltriparus minimus)	A,B,C,D,E,F	C-P resident	Unknown	Oak woodlands, mountain brush, broad-leafed and mixed woods and pinion-juniper forest
Family Sittidae				
! White-breasted Nuthatch (Sitta carolinensis)	A,B,C,D,E,F	C-P resident	Unknown	Coniferous forests, pinion-juniper woodlands, oak brush, and riparian woodlands
! Red-breasted Nuthatch (Sitta canadensis)	A,B,C,E,F	C-P resident	Unknown	Coniferous forests
! Pygmy Nuthatch (Sitta pusilla)	A,B,C,D,E,F	C-P resident	Unknown	Ponderosa pines and Douglas fir

Species	Biogeographic Area Inhabited	Status	Population Trend	Habitat Use Area
Family Certidae				
! Brown Creeper (*Certhia familiaris*)	A,B,C,E,F	C-P resident	Unknown	In summer mature montane mixed and coniferous forests; lower elevations in winter
Family Cinclidae				
! Dipper (*Cinclus mexicanus*)	A,B,C,D,E,F	C-P resident	Unknown	Fast-flowing streams in or near mountains; lower levels in winter
Family Troglodytidae				
! House Wren (*Troglodytes aedon*)	A,B,C,D,E,F	C-P summer resident	Unknown	Woodlands of mountains and valleys
Rock Wren (*Salpinctes obsoletus*)	A,B,C,D,E,F	C-P resident	Unknown	Desert to high mountain areas with talus slopes and cliffs
Canyon Wren (*Catherpes mexicanus*)	A,B,C,D,E,F	C-P resident	Unknown	Rocky cliffs, crevices, and rock slides
Bewick's Wren (*Thryomanes bewickii*)	A,B,C,D,E,F	C-P resident	Unknown	Under brush and pinion-juniper woodlands
Long-billed Marsh Wren (*Cistothorus palustris*)	A,B,C,D,E,F	L-P resident	Unknown	Cattail marshes
Family Mimidae				
Mockingbird (*Mimus polyglottos*)	A,B,C,D,E,F	U-P transient and summer resident	Unknown	Towns, farms, ranches, roadsides, brush and desert streamsides
! Gray Catbird (*Dumetella carolinensis*)	A,B,C,D,E,F	U-P summer resident	Unknown	Undergrowth, brush or thickets along valley streams

Species	Biogeographic Area Inhabited	Status	Population Trend	Habitat Use Area
Brown Thrasher (Toxostoma rufum)	D,E,F	R-P resident	Unknown	Brushy places and thorny thickets
Bendire's Thrasher (Toxostoma bendirei)	F	R-P resident	Unknown	Desert scrub and farmlands
! Sage Thrasher (Oreoscoptes montanus)	A,B,C,D,E,F	C-P resident	Unknown	Sagebrush, rabbit-brush, brushy slopes and mesas
Family Muscicapidae				
! American Robin (Turdus migratorius)	A,B,C,D,E,F	C-P resident	Unknown	In summer towns, lawns, farmland, open forests, streamsides and any wooded habitat; in winter berry-bearing trees
Varied Thrush (Ixoreus naevius)	E,F	O-P winter resident	Unknown	Deciduous and coniferous forests usually near water
! Hermit Thrush (Catharus guttatus)	A,B,C,D,E,F	C-P summer resident and transient	Unknown	In summer mixed woodlands and open coniferous forest in winter woods, thickets and parks
! Swainson's Thrush (Catharus ustulatus)	A,B,D	C-P summer resident	Unknown	Willow thickets, river woodlands, aspens, forest undergrowth and conifers
! Veery (Catharus fuscescens)	A,B	U-P summer resident	Unknown	Streamside woodlands

Species	Biogeographic Area Inhabited	Status	Population Trend	Habitat Use Area
! * Western Bluebird (Sialia mexicana)	A,B,C,D,E,F	U-P summer resident	Unknown	Scattered trees, open conifers, forests and farms
! * Mountain Bluebird (Sialia currucoides)	A,B,C,D,E,F	C-P resident	Unknown	In summer open areas where mountain meadows and pastures are interspersed with loose stands or single coniferous trees; in winter lower elevations, often open areas with available perching sites
! Townsend's Solitaire (Myadestes townsendi)	A,B,C,D,E,F	C-P resident	Unknown	In summer open coniferous forests in the mountains; in winter canyons, brushy slopes and junipers
Family Sylviidae				
! Blue-gray Gnatcatcher (Polioptila caerulea)	A,B,C,D,E,F	C-P summer resident	Unknown	Open mixed woods, streamside thickets, mountain brush and pinion-juniper woodlands
! Golden-crowned Kinglet (Regulus satrapa)	A,B,C,D,E,F	U-P resident	Unknown	In summer coniferous forests; in winter pinion-juniper and brush in lower elevations
! Ruby-crowned Kinglet (Regulus calendula)	A,B,C,D,E,F	C-P resident	Unknown	In summer coniferous forests; in winter other woodlands and thickets

Species	Biogeographic Area Inhabited	Status	Population Trend	Habitat Use Area
Family Motacillidae				
Water Pipet (Anthus spinoletta)	A,B,C,D,E,F	C-P resident	Unknown	In summer alpine zone; in migration and winter plains, bare fields, shores and irrigated field
Family Bombycillidae				
Bohemian Waxwing (Bombycilla garrulus)	A,B,C,D,E,F	U-P winter resident	Unknown	Widespread and feeds on berries
Cedar Waxwing (Bombycilla cedrorum)	A,B,C,D,E,F	C-P winter resident	Unknown	Open woodlands, Russian olive and other fruiting trees or orchards
Family Laniidae				
Northern Shrike (Lanius excubitor)	A,B,C,D,E,F	U-P winter resident	Unknown	Semi-open country or open country with look-out posts
Loggerhead Shrike (Lanius ludovicianus)	A,B,C,D,E,F	C-P resident	Unknown	Deserts and other open country with lookout posts, wires, scattered trees and low scrub
Family Sturnidae				
Starling (Stuirnus vulgaris)	A,B,C,D,E,F	C-P resident	Unknown	Cities, fields, orchards and woodlands
Family Vireonidae				
Gray Vireo (Vireo vicinior)	D,E,F	U-P summer resident	Unknown	Brushy mountain slopes, scrub oak and junipers
Solitary Vireo (Vireo solitarius)	A,B,C,D,E,F	U-P summer resident	Unknown	Streamside woodlands, pinion-juniper and Ponderosa pine forests

Species	Biogeographic Area Inhabited	Status	Population Trend	Habitat Use Area
Warbling Vireo (Vireo gilvus)	A,B,C,D,E,F	C-P summer resident	Unknown	Deciduous and mixed aspen woodlands near mountain and valley streams
Family Parulidae				
Orange-crowned Warbler (Vermivora celata)	A,B,C,D,E,F	C-P summer resident and transient	Unknown	Brushy woodland clearings, hillsides, aspens and mountain brush; in migration streamside woodlands
Nashville Warbler (Vermivora ruficapilla)	A,B,C,D,E,F	U-P transient	Unknown	Open mixed woods with undergrowth and at forest edges
Virginia's Warbler (Vermivora virginiae)	A,B,C,D,E,F	C-P summer resident	Unknown	Oak canyons, brushy slopes and pinion-juniper brushland
Lucy's Warbler (Vermivora luciae)	E,F	U-P summer resident	Unknown	Along desert streams in willows and cottonwoods
Yellow Warbler (Dendroica petechia)	A,B,C,D,E,F	C-P summer resident	Unknown	Willows, aspens, streamside trees and shrubs or town shade trees
* Grace's Warbler (Dendroica graciae)	E,F	U-P summer resident	Unknown	Ponderosa pine-oakbrush communities of the mountains
Magnolia Warbler (Dendroica magnolia)	A,B,C,D,E,F	U-P transient	Unknown	Coniferous forests

Species	Biogeographic Area Inhabited	Status	Population Trend	Habitat Use Area
Hermit Warbler (Dendroica occidentalis)	E,F	U-P summer resident and transient	Unknown	Coniferous forests; in migration other trees
! Yellow-rumped Warbler (Dendroica coronata)	A,B,C,D,E,F	C-P summer resident	Unknown	In summer coniferous and mixed forests; in winter varied woods, river thickets, brush and gardens
! Black-throated Gray Warbler (Dendroica nigrescens)	A,B,C,D,E,F	C-P summer resident	Unknown	In summer dry oak slopes, pinion-juniper woodlands, open mixed woods; in migration varied trees and brush
! Townsend's Warbler (Dendroica townsendi)	A,B,C,D,E,F	U-P transient	Unknown	Coniferous forests
Northern Waterthrush (Seiurus noveboracensis)	B,C,D,E,F	U-P transient	Unknown	Swampy or wet woods, streamsides and lake-shores; in migration thickets
! MacGillivray's Warbler (Oporornis tolmiei)	A,B,C,D,E,F	C-P summer resident	Unknown	Low dense undergrowth and shady, damp thickets
! Yellowthroat (Geothylpis trichas)	A,B,C,D,E,F	L-P summer resident	Unknown	Cattail and bulrush marshes, willow thickets and streamsides
! Yellow-breasted Chat (Icteria virens)	A,B,C,D,E,F	C-P summer resident	Unknown	Dense brush along water courses, willow thickets and moist canyons

Species	Biogeographic Area Inhabited	Status	Population Trend	Habitat Use Ar
! Wilson's Warbler (Wilsonia pusilla)	A,B,C,D,E,F	C-P summer resident	Unknown	Deciduous shrubbery or thickets, streamside growth, willows and fir thickets in the mountains
! American Redstart (Setophaga ruticilla)	A,B,C	U-P transient	Unknown	Open secondary deciduous woodlands and riparian woodlands
Family Ploceidae				
House Sparrow (Passer domesticus)	A,B,C,D,E,F	C-P resident	Unknown	Cities, farms and houses
Family Icteridae				
! Western Meadowlark (Sturnella neglecta)	A,B,C,D,E,F	C-P resident	Unknown	Open fields, meadows and plains
Yellow-headed Blackbird (Xanthocephalus xanthocephalus)	A,B,C,D,E,F	C-P summer resident	Unknown	Marshes with cattail and bulrushes; forages in fields and open country
Red-winged Blackbird (Agelaius phoeniceus)	A,B,C,D,E,F	C-P resident	Unknown	Breeds in marshes with emergent aquatic vegetation, forages in cultivated land and at the edge of water
Northern Oriole (Icterus galbula)	A,B,C,D,E,F	C-P summer resident	Unknown	Open woodlands, cottonwoods or other shade trees and riparian areas

Species	Biogeographic Area Inhabited	Status	Population Trend	Habitat Use Area
* Scotts Oriole (Icterus parisorum)	C,D,E,F	U-P summer resident	Unknown	Pinion-juniper woodlands of desert mountains. oak slopes and cottonwood trees in canyons
Rusty Blackbird (Euphagus carolinus)	A	O-P transient	Unknown	Wooded marshes and riparian woodlands
Brewer's Blackbird (Euphagus cyanocephalus)	A,B,C,D,E,F	C-P resident	Unknown	Varied open country, lakeshores, irrigated pastures, feed lots, parks and cities
! Common Grackle (Quiscalus quiscula)	A,B,D	A-P transient	Unknown	Farms, fields, streamsides and wet woodlands
Brown-headed Cowbird (Molothrus ater)	A,B,C,D,E,F	C-P resident	Unknown	Farms, fields, barnyards wood edges and riparian woodlands
Family Thraupidae				
! Western Tanager (Piranga ludoviciana)	A,B,C,D,E,F	C-P summer resident	Unknown	Open coniferous, aspen or mixed forests; widespread in migration
Family Embarizidae				
Rose-breasted Grosbeak (Pheucticus ludovicianus)	F	O-P summer resident	Unknown	Broadleaf riparian areas and aspens
Black-headed Grosbeak (Pheucticus melanocephalus)	A,B,C,D,E,F	C-P summer resident	Unknown	Edges of second growth deciduous woods, pinion, riparian areas, orchards and parks

Species	Biogeographic Area Inhabit	Status	Population Trend	Habitat Use
Blue Grosbeak (Guiraca caerulea)	B,C,D,E,F	C-P summer resident	Unknown	Brushy and weedy places, willows and river thicke and other riparian areas
Lapland Longspur (Calcarius lapponicus)	A,B,C,D,E,F	R-P winter resident	Unknown	Fields, grasslands, saline flats, desert shrub; often seen with horned larks
Indigo Bunting (Passerina cyanea)	A,B,D	R-P summer resident	Unknown	Brush, farm lands and streamsides
Lazuli Bunting (Passerina amoena)	A,B,C,D,E,F	C-P summer resident	Unknown	Mountain brush, streamside shrubs and farmland tree rows
Green-tailed Towhee (Chlorura chlorura)	A,B,C,D,E,F	C-P summer resident	Unknown	Low mountain brush, greasewood and pinion-juniper woodlands
! Rufous-sided Towhee (Pipilo erythrophthalmus)	A,B,C,D,E,F	C-P resident	Unknown	Mountain brush, forest edges and city shrubs
Lark Bunting (Calamospiza melanocorys)	A,B,C,D,E,F	O-P transient	Unknown	Plains, prairies, desert shrub and sagebrush
Savannah Sparrow (Passercules sandwichensis)	A,B,C,D,E,F	C-P summer resident	Unknown	Grasslands, fields, saltgrass meadows and open country
* Grasshopper Sparrow (Ammodramus savannarum)	A,B,C,D,E,F	R-P transient	Unknown	Dry grasslands
LeConte's Sparrow (Ammospiza leconteii)	F	A-P transient	Unknown	Tall grass, weedy meadows and marshes

Species	Biogeographic Area Inhabited	Status	Population Trend	Habitat Use Area
Vesper Sparrow (Pooecetes gramineus)	A,B,C,D,E,F	C-P summer resident	Unknown	Alfalfa and grain fields, meadows, sagebrush and desert shrub
Lark Sparrow (Chondestes grammacus)	A,B,C,D,E,F	C-P summer resident	Unknown	Open country in sagebrush and desert shrub with available perch sites
Sage Sparrow (Amphispiza belli)	A,B,C,D,E,F	U-P summer resident	Unknown	Sagebrush, greasewood and other desert shrubs
! Dark-eyed Junco (Junco hyemalis)	A,B,C,D,E,F	C-P resident	Unknown	In summer openings and edges of coniferous and mixed woodlands; in winte greasewood and undergrowt
! Gray-headed Junco (Junco caniceps)	A,B,C,D,E,F	C-P summer resident	Unknown	Coniferous, mixed forests and mountain brush
! Tree Sparrow (Spizella arborea)	A,B,C,D,E,F	U-P winter resident	Unknown	Willow thickets and brushy areas
! Chipping Sparrow (Spizella passerina)	A,B,C,D,E,F	C-P summer resident	Unknown	Mountain coniferous and deciduous woodlands, valley woodlands, farms, orchards, parks and brushlands
Brewer's Sparrow (Spizella breweri)	A,B,C,D,E,F	C-P summer resident	Unknown	Sagebrush, greasewood and other desert shrubs or brushy areas
Harris Sparrow (Zonotrichia querula)	A,B,C,D,E,F	U-P winter resident	Unknown	Brushy edges of open woodlands, Russian olives and willows

Species	Biogeographic Area Inhabited	Status	Population Trend	Habitat Use Area
! White-crowned Sparrow (Zonotrichia leucophrys)	A,B,C,D,E,F	C-P resident	Unknown	In summer forest edges and clearings, low brush and mountain thickets; in winter widespread in the valleys, along fence row willows, brushy areas, corn and greasewood
White-throated Sparrow (Zonotricia albicollis)	E,F	R-P winter resident	Unknown	Coniferous and mixed woodlands, woodland undergrowth thickets and brush
Golden-crowned Sparrow (Zonotrichia atricapilla)	E,F	R-P winter resident	Unknown	Mountain brush and brushy areas in the lower valleys
Swamp Sparrow (Zonotrichia georgiana)	F	U-P winter resident	Unknown	Marshes; in migration weedy fields
! Fox Sparrow (Zonotrichia iliaca)	A,B,C	K-P summer resident and transient	Unknown	Valley and mountain woodlands and brushy areas usually near water
! Lincoln's Sparrow (Zonotrichia lincolnii)	A,B,C	U-P summer resident R-P winter resident	Unknown	In summer willow thickets, brushy bogs; in winter lowland thickets, tall weeds and bushes
Song Sparrow (Zonotrichia melodia)	A,B,C,D,E,F	C-P resident	Unknown	Woodland edges, grasslands, cattail marshes, thickets and brushy fence rows

Species	Biogeographic Area Inhabited	Status	Population Trend	Habitat Use Area
Black-throated Sparrow (Amphispiza bilineata)	A,B,C,D,E,F	U-P summer resident	Unknown	Pinion-juniper, mountain brush and sagebrush
Family Fringillidae				
Evening Grosbeak (Coccothraustes vespertinus)	A,B,C,D,E,F	C-P winter resident	Unknown	Boxelders, Russian olive trees and fruiting shrubs
! Cassin's Finch (Carpodacus cassinii)	A,B,C,D,E,F	C-P summer resident U-P winter resident	Unknown	In summer, open conifer forests of high mountains in winter valleys
House Finch (Carpodacus mexicanus)	A,B,C,D,E,F	C-P resident	Unknown	Varied habitats; towns, ranches, open woods, mountain scrub, canyons, deserts and riparian area
! Pine Grosbeak (Pinicola enucleator)	A,B,C,E,F	U-P resident	Unknown	In summer coniferous forests; in winter mixed woods and fruiting trees
! Rosy Finch (Leucosticte arctoa)	A,B,C,D,E,F	C-P resident	Unknown	In summer alpine tundra, meadows and snowfields; winters in lowlands
! Pine Siskin (Carduelis pinus)	A,B,C,D,E,F	C-P resident	Unknown	Coniferous forests, along edges of second growth deciduous forests; in migration seen in large flocks in the lower valle

Species	Biogeographic Area Inhabited	Status	Population Trend	Habitat Use Area
American Goldfinch (Carduelis tristis)	A,B,C,D,E,F	C-P resident	Unknown	Riparian woodlands, willows, cottonwoods, orchards, roadsides and sunflowers
! Lesser Goldfinch (Carduelis psaltria)	A,B,C,D,E,F	C-P resident	Unknown	Open brushy country, open woods, wooded streams and gardens
! Red Crossbill (Loxia curvirostra)	A,B,C,E,F	U-P summer resident	Unknown	Coniferous forests
Mammals -- 103 species in southeastern Utah				
Order Insectivora				
Family Soricidae				
*Dwarf Shrew (Sorex nanus)	B,C,D,E,F	R-N	Unknown	Open grass-covered areas which may have scattered brush, marshes, coniferous forests and openings in woods
! North Water Shrew (Sorex palustris)	A,B,C,E,F	C-N	Unknown	Along nearly all permanent streams in mountainous areas
! Merriam Shrew (Sorex merriami)	A,B,C,D,E,F	U-N	Unknown	Arid sagebrush or grassland areas, mountain mahogany, coniferous forests, aspen and cottonwoods
! Vagrant Shrew (Sorex vagrans)	A,B,C,F	C-N	Unknown	Marshes, bogs, wet meadows and along streams in forests

Species	Biogeographic Area Inhabited	Status	Population Trend	Habitat Use Area
! Masked Shrew (Sorex cinereus)	A,B,D,E	C-N	Unknown	Moist sites in forests, open country and brushlan
! Dusky Shrew (Sorex obscurus)	A,B,C,F	C-N	Unknown	Marshes, coniferous forests and dry hillsides
* Gray (Desert) Shrew (Notiosorex crawfordi)	E,F	R-N	Unknown	Arid alluvial fans, brushy slopes, sagebrush and other low desert shrub communities
Order Chiroptera				
Family Vespertilionidae				
! Little Brown Myotis (Myotis lucifugus)	A,B,C,D,E,F	C-N	Unknown	Caves, mine tunnels, hollow trees or buildings usually near water
Fringed Myotis (Myotis thysanodes)	A,B,C,D,E,F	U-N	Unknown	Caves, old buildings, roc crevices, pinion-juniper and desert shrub
! Long-eared Myotis (Myotis evotis)	A,B,C,D,E,F	C-N	Unknown	Coniferous forests in hig mountains, around buildin or trees and occasionally caves
! Long-legged Myotis (Myotis volans)	A,B,C,D,E,F	C-N	Unknown	Buildings, small pockets, crevices in rock ledges and trees

Species	Biogeographic Area Inhabited	Status	Population Trend	Habitat Use A
Yuma Myotis (Myotis yumanensis)	A,B,C,D,E,F	U-N	Unknown	Caves, tunnels and buildings in arid areas
California Myotis (Myotis californicus)	A,B,C,D,E,F	C-N	Unknown	Mine tunnels, hollow trees, loose rocks, buildings, bridges; chiefly a crevice dweller (up to 6,000 feet in elevation)
! Small-footed Myotis (Myotis leibii)	A,B,C,D,E,F	U-N	Unknown	Caves, mine tunnels, crevices in rocks and in buildings
! Silver-haired Bat (Lasionycteris noctivagans)	A,B,C,D,E,F	C-N	Unknown	Forest areas, occasionall in caves or buildings
Western Pipistrelle (Pipistrellus hesperus)	A,B,C,D,E,F	C-N	Unknown	Caves, under loose rocks, crevices, in cliffs, buildings; arid areas nea water courses
! Big Brown Bat (Eptesicus fuscus)	A,B,C,D,E,F	C-N	Unknown	Caves, tunnels, crevices, hollow trees, buildings and wooded areas
! * Red Bat (Lasiurus borealis)	A,B,C,D,E,F	U-N	Unknown	Wooded areas; roosts in trees and occasionally enters caves
! Hoary Bat (Lasiurus cinereus)	A,B,C,D,E,F	U-N	Unknown	Wooded areas
! * Western Big-eared Bat (Plecotus townsendii)	A,B,C,D,E,F	C-N	Unknown	Caves, mine tunnels and buildings utilized for roosting; inhabits arid western desert shrub, pinion-juniper and pine forests

Species	Biogeographic Area Inhabited	Status	Population Trend	Habitat Use Area
Mexican Big-eared Bat (Plectus phyllotis)	F	R-N	Unknown	Caves in pine-oak forests between 5,000 to 8,500 feet elevation
*Spotted Bat (Euderma maculata)	Unknown	K-N	Unknown	Arid country; it occasionally enters buildings and caves
Pallid Bat (Antrozous pallidus)	A,B,C,D,E,F	C-N	Unknown	Caves, mine tunnels, crevices in rocks, buildings and trees are utilized for roosts; inhabits scattered desert shrub and pine-oak forests below 6,500 feet elevation
Family Molossidae				
Mexican Free-tailed Bat (Tadarida brasiliensis)	A,B,C,D,E,F	C-N	Unknown	Caves and buildings are utilized for roosts; inhabits lower and upper Sonoran Life Zones
Order Lagomorpha				
Family Ochotonidae				
Pika (Ochontona princeps)	A,B,C,E,F	C-N	Unknown	Talus slopes and rock-slides above 8,000 feet elevation
Family Leporidae				
! White-tailed Jackrabbit (Lepus townsendii)	A,B,C,D	C-N	Stable	Open, grassy or sage-brush areas at medium elevation
! *Snowshoe Hare (Lepus americanus)	A,B,C	C-P	Cyclic	Coniferous forests and aspen, riparian and brush types near conifers

Species	Biogeographic Area Inhabited	Status	Population Trend	Habitat Use Area
Black-tailed Jackrabbit (Lepus californicus)	A,B,C,D,E,F	C-N	Stable	Open grassland, sagebrush and desert shrub areas at low to medium elevations
*Mountain Cottontail (Sylvilagus nuttallii)	A,B,C,E,F	C-P	Stable	Thickets, sagebrush, loose rocks, cliffs and forests
*Desert Cottontail (Sylvilagus audubonii)	A,B,C,D,E,F	C-P	Stable	Open plains, foothills and low valleys with grass, sagebrush or scattered pinion-juniper
Order Rodentia				
Family Sciuridae				
Zuni Prairie Dog (Cynomys gunnisoni)	F	C-N	Stable	Mountain valleys, 5,000-12,000 feet elevation; open to slightly brushy country with scattered pinion-juniper
White-tailed Prairie Dog (Cynomys leucurus)	A,B,C,D,E,F	C-N	Stable	Valleys and flatlands where vegetation is sparse
*Abert Squirrel (Sciurus aberti)	F	L-P	Stable	Ponderosa pines
Red Squirrel (Tamiasciurus hudsonicus)	A,B,C,F	C-N	Stable	Coniferous forests in the mountains

Species	Biogeographic Area Inhabited	Status	Population Trend	Habitat Use Area
*Spotted Ground Squirrel (Spermophilus spilosoma)	F	L-N	Unknown	Open forests, scattered brush and grassy areas with sandy soil is preferred
Rock Squirrel (Spermophilus variegatus)	A,B,C,D,E,F	C-N	Stable	Rocky canyons with boulder strewn slopes, riparian woodlands, and ditchbanks
Uintah Ground Squirrel (Spermophilus armatus)	A,B	C-N	Stable	Meadows and edges of fields near green vegetation up to 8,000 feet elevation
Golden-mantled Ground Squirrel (Spermophilus lateralis)	A,B,C	C-N	Stable	Mountain brush, open pine and spruce-fir forests to above timberline
Whitetail Antelope Squirrel (Ammospermophilus leucurus)	A,B,C,D,E,F	C-N	Stable	Arid areas of low desert and foothills with sparse vegetation
Yellow-billied Marmot (Marmota flaviventris)	A,B,C,E,F	C-N	Stable	Rocky sites or talus slopes along valleys or in foothills 5,000 to 9,000 feet elevation
*Northern Flying Squirrel (Glaucomys sabrinus)	A,B,C,F	C-N	Unknown	Coniferous and mixed forests in high mountains

Species	Biogeographic Area Inhabited	Status	Population Trend	Habitat Use Area
Least Chipmunk (Eutamius minimus)	A,B,C,D,E,F	C-N	Stable	Variety of habitat types including sagebrush, desert shrub, mountain bush, coniferous and mixed forest areas
Colorado Chipmunk (Eutamius quadrivittatus)	C,E,F	C-N	Stable	Coniferous forests, mountain brush areas, rocky slopes and ridges
Uintah Chipmunk (Eutamius umbrinus)	A,B,D,E,F	C-N	Stable	Coniferous forest and mountain brush areas up to timberline with rocky slopes
Cliff Chipmunk (Eutamius dorsalis)	A,B,C,D,E	U-N	Stable	Pinion-juniper slopes, riparian woodlands with rocky areas
Family Geomyidae				
Northern Pocket Gopher (Thomomys talpoides)	A,B,C,D,E,F	C-N	Unknown	Grassy prairies, alpine meadows, brush areas, open pine forests; generally restricted to the mountains
Valley or Botta Pocket Gopher (Thomomys bottae)	A,B,C,D,E,F	C-N	Unknown	Valleys and mountain meadows; prefers loam soil but may be found in sandy or rocky situations

Species	Biogeographic Area Inhabited	Status	Population Trend	Habitat Use Area
Ord Kangaroo Rat (Dipodomys ordii)	A,B,C,D,E,F	C-N	Unknown	Desert shrub, pinion-juniper and tamarisk communities; sandy soils preferred but found on hard soils
Baird Pocket Mouse (Perognathus flavus)	F	C-N	Unknown	Prefers short grass areas with sandy or rocky soils
Great Basin Pocket Mouse (Perognathus parvus)	A,D	C-N	Unknown	Sagebrush or greasewood and other desert shrub communities and pinion-juniper
Apache Pocket Mouse (Perognathus apache)	C,D,F	C-N	Unknown	Sparse brushlands and scattered pinion-juniper, usually 5,000-7,200 feet elevation
Family Castoridae				
* Beaver (Castor canadensis)	A,B,C,D,E,F	C-P	Increasing	Streams, lakes and irrigation systems with poplars, birch or willows on the bank
Family Cricetidae				
Western Harvest Mouse (Reithrodontomys megalotis)	A,B,C,D,E,F	C-N	Unknown	Grasslands, open desert, wetlands, irrigated farmland or dense vegetation near water
Canyon Mouse (Peromyscus crinitus)	A,B,C,D,E,F	C-N	Unknown	Rocky canyons and slopes with mountain brush

pecies	Biogeographic Area Inhabited	Status	Population Trend	Habitat Use Area
Deer Mouse (Peromyscus manicalatus)	A,B,C,D,E,F	C-N	Unknown	All dry-land habitat and irrigated farmland within its range
Brush Mouse (Peromyscus boylei)	A,B,C,D,E,F	C-N	Unknown	Brushy areas of arid and semi-arid regions; prefers rocky sites
Pinion Mouse (Peromyscus truei)	A,B,C,D,E,F	C-N	Unknown	Rocky terrain in pinion-juniper areas
Northern Grasshopper Mouse (Onychomys leucogaster)	C,F	U-N	Unknown	Open country of grass, sagebrush or greasewood and sandy or gravelly soil
*White-throated Wood Rat (Neotoma albigula)	F	C-N	Unknown	Brushland with rocky cliffs and shallow caves
Desert Wood Rat (Neotoma lepida)	A,B,C,D,E	C-N	Unknown	Desert floors and rocky slopes with low desert vegetation or arid mountain brush
*Mexican Wood Rat (Neotoma mexicana)	F	C-N	Unknown	Rocks, cliffs and mountains
Bushy-tailed Wood Rat (Neotoma cinerea)	A,B,C,D,E,F	C-N	Unknown	High mountains with rimrock, rock slides and pines
Muskrat (Ondatra zibethicus)	A,B,C,D,E,F	C-N	Stable	Marshes, edge of ponds, lakes, streams and irrigation canals

pecies	Biogeographic Area Inhabited	Status	Population Trend	Habitat Use Area
! Meadow Vole (Microtus pennsylvanious)	A,D	C-N	Unknown	Moist areas with dense growth of grasses
! Mountain Vole (Microtus montanus)	A,B,D,E	C-N	Unknown	Dense vegetation in sagebrush-grass communities
! Richardson's Vole (Microtus richardsoni)	A	C-N	Unknown	Creekbanks and marshes in mountains to above timberline
! Longtail Vole (Microtus longicaudus)	A,B,C,D,E,F	C-N	Unknown	In summer streambanks, mountain meadows with dry sites; in winter brushy areas
Sagebrush Vole (Lagurus curtatus)	C,F	C-N	Unknown	Scattered sagebrush with loose soil and arid conditions
Family Muridae				
Black Rat (Rattus rattus)	A,B,C,D,E,F	C-N	Unknown	Buildings and dumps
Norway Rat (Rattus norvegicus)	A,B,C,D,E,F	C-N	Unknown	Burrows along building foundations and beneath rubbish piles
! House Mouse (Mus musculus)	A,B,C,D,E,F	C-N	Unknown	Buildings and occasionally in fields

Species	Biogeographic Area Inhabited	Status	Population Trend	Habitat Use Area
Family Zapodidae				
Western Jumping Mouse (Zapus princeps)	A	C-N	Unknown	Low meadows near streams with lush growth of grasses and forbs; found in various land habitats
Family Erethizontidae				
! Porcupine (Erethizon dorsatum)	A,B,C,D,E,F	C-N	Stable	Forested areas, occasionally away from trees if brush is available
Order Carnivora				
Family Canidae				
! Coyote (Canis latrans)	A,B,C,D,E,F	C-N	Stable	Ubiquitous
* Red Fox (Vulpes fulva)	A,B,C,D,E,F	C-N	Stable	Forest and open country preferred
* Kit Fox (Vulpes macrotis)	A,B,C,D,E,F	U-N	Stable	Open level, sandy ground preferred with low desert vegetation
! Gray Fox (Urocyan cinereoargenteus)	A,B,C,D,E,F	C-N	Stable	Brush and open forests

Species	Biogeographic Area Inhabited	Status	Population Trend	Habitat Use Area
*Gray Wolf (Canis lupus)	A,B,C,D,E,F	X-P	Extirpated	Wilderness forests
Family Ursidae				
*Black Bear (Ursus americanus)	A,B,C,E,F	C-P	Increasing	Mountainous areas
*Grizzly Bear (Ursus horribilis)	A,B,C,E,F	X-P	Extirpated	Remote mountainous regions
Family Procyonidae				
Ring-tailed Cat (Bassariscus astutus)	A,B,C,D,E,F	C-N	Stable	Near water on slopes with mountain brush, rocky ridges and cliffs
*Raccoon (Procyon lotor)	A,B,C,D,E,F	O-N	Increasing	Along streams, lake borders and near wooded areas or rock cliffs
Family Mustelidae				
*Short-tailed Weasel (Mustela erminea)	A,B,C,F	R-P	Stable	Brushy or wooded areas not far from water
*Long-tailed Weasel (Mustela frenata)	A,B,C,D,E,F	C-P	Stable	All land habitat types near water
*Mink (Mustela vison)	A,B,C,F	L-P	Unknown	Along streams and lakes
*Wolverine (Gulo luscus)	A,B	X-P	Extirpated	Remote mountain regions
*Black-footed Ferret (Mustela nigripes)	A,B,C,D,F	E-P	Unknown	Prairie dog towns
*Marten (Martes caurina)	A,B,C,F	R-P	Unknown	Coniferous forests at high elevations

Species	Biogeographic Area Inhabited	Status	Population Trend	Habitat Use Area
*Badger (Taxidea taxus)	A,B,C,D,E,F	C-P	Stable	Open grasslands, deserts and high mountain forests where prey is available
*Striped Skunk (Mephitis mephitis)	A,B,C,D,E,F	C-P	Increasing	Semi-open country of prairie, brushlands or mixed woodlands within two miles of water
*Spotted Skunk (Spilogale gracilis)	A,B,C,D,E,F	C-P	Stable	Prairies or grasslands with brushy or sparsely wooded areas along streams with boulders
*River Otter (Lutra canadensis)	A,B,C,D,E,F	R-P	Unknown	Along streams and lake borders
Family Felidae				
*Bobcat (Lynx rufus)	A,B,C,D,E,F	C-P	Declining	Rimrock and mountain brush areas
*Canada Lynx (Lynx canadensis)	A,B,C,E,F	X-P	Extirpated	Forested areas in the mountains
*Cougar (Felis concolor)	A,B,C,D,E,F	C-P	Stable	Rugged mountains with forests, cliffs and ledges
Order Artiodactyla				
Family Cervidae				
*Mule Deer (Odocoileus hemionus)	A,B,C,D,E,F	C-P	Increasing	Coniferous forests, desert shrub, mountain brush, grassland with shrubs and other habitats where browse species are present

Species	Biogeographic Area Inhabited	Status	Population Trend	Habitat Use Area
! *Moose (Alces alces)	A	L-P	Increasing	Mountainous areas, forests, mountain brush and willow bottoms
! *Rocky Mountain Elk (Cervus canadensis)	A,B,C,E,F	C-P	Increasing	Semi-open forests, mountain meadows (in summer), foothills, plains and valleys
Family Antilocapridae				
* Pronghorn Antelope (Antilocapra americana)	B,C,D,E,F	L-P	Stable	Open prairies and sagebrush or desert shrub plains
Family Bovidae				
*Desert Bighorn Sheep (Ovis canadensis nelsoni)	D,E,F	L-P	Increasing	Precipitous terrain on mountain and canyon slopes and rims with sparse growth of trees
* Rocky Mountain Bighorn Sheep (Ovis canadensis canadensis)	B,C	L-P	Increasing	Precipitous terrain on mountain and canyon slopes and rims with sparse growth of trees
* Bison (Bison bison)	E	L-P	Stable	Desert shrub plains of the Burr Desert and mountain brush forest habitats associated with steep mountain slopes of the Henry Mountains

Table 1. List of Game Species and Region of Inhabitation Within Utah.

Game Species of Utah	REGION				
	Southeastern	Southern	Central	Northeastern	Northern
10 BIG GAME SPECIES					
Bison	x	x			
Black Bear	x	x	x	x	x
Cougar	x	x	x	x	x
Desert Bighorn Sheep	x	x			
Elk	x	x	x	x	x
Moose	x		x	x	x
Mountain Bighorn Sheep	x		x	x	x
Mountain Goat			x		
Mule Deer	x	x	x	x	x
Pronghorn Antelope	x	x	x	x	x
Subtotal	9	7	8	7	7
20 GAME FISH SPECIES					
Arctic Grayling		x		x	x
Black Bullhead	x	x	x	x	x
Black Crappie	x	x	x	x	x
Bluegill	x	x	x	x	x
Bonneville Cisco					x
Brook Trout	x	x	x	x	x
Brown Trout	x	x	x	x	x
Channel Catfish	x	x	x	x	x
Cutthroat Trout	x	x	x	x	x
Golden Trout			x	x	
Kokanee Salmon				x	x
Lake Trout		x	x	x	x
Largemouth Bass	x	x	x	x	x
Mountain Whitefish			x	x	x
Northern Pike	x	x			
Perch	x	x	x	x	x
Rainbow & Albino Trout	x	x	x	x	x
Smallmouth Bass			x	x	x
Striped Bass	x	x			
Walleye	x	x	x	x	x
White Bass		x	x		
Subtotal	13	16	16	17	17

Game Species of Utah	REGION				
	Southeastern	Southern	Central	Northeastern	Northern
9 FURBEARER SPECIES					
Badger	x	x	x	x	x
Beaver	x	x	x	x	x
Long-tailed Weasel	x	x	x	x	x
Marten	x	x	x	x	x
Mink	x	x	x	x	x
River Otter	x		x	x	x
Short-tailed weasel	x	x	x	x	x
Spotted Skunk	x	x	x	x	x
Striped Skunk	x	x	x	x	x
Subtotal	9	8	8	9	9
43 MIGRATORY GAME BIRD SPECIES					
American Widgeon	x	x	x	x	x
Band-tailed Pigeon	x	x	x		x
Barrows Goldeneye	x	x	x	x	x
Black Brant	x	x		x	x
Black Duck	x	x	x	x	x
Blue-winged Teal	x	x	x	x	x
Bufflehead	x	x	x	x	x
Canada Goose	x	x	x	x	x
Canvasback	x	x	x	x	x
Cinnamon Teal	x	x	x	x	x
American Coot	x	x	x	x	x
Common Gallinule	x	x	x	x	x
Common Goldeneye	x	x	x	x	x
Common Merganser	x	x	x	x	x
Common Snipe	x	x	x	x	x
European Widgeon	x	x	x	x	x
Fulvous Tree Duck	x	x	x	x	x
Gadwall	x	x	x	x	x
Greater Scaup	x	x	x	x	x
Green-winged Teal	x	x	x	x	x
Harlequin Duck	x	x		x	x

Game Species of Utah	REGION Southeastern	Southern	Central	Northeastern	Northern
Hooded Merganser	x	x	x	x	x
Lesser Scaup	x	x	x	x	x
Mallard	x	x	x	x	x
Mourning Dove	x	x	x	x	x
Old Squaw		x	x	x	x
Pintail	x	x	x	x	x
Red-breasted Merganser	x	x	x	x	x
Redhead	x	x	x	x	x
Ring-necked Duck	x	x	x	x	x
Ross Goose	x	x			x
Ruddy Duck	x	x	x	x	x
Sandhill Crane	x	x	x	x	x
Shoveler	x	x	x	x	x
Snow Goose	x	x	x	x	x
Sora Rail	x	x	x	x	x
Surf Scoter		x	x	x	x
Trumpeter Swan		x	x	x	x
Virginia Rail	x	x	x	x	x
Whistling Swan	x	x	x	x	x
White-fronted Goose	x	x	x	x	x
White-winged Scoter	x	x	x		x
Wood Duck	x	x	x	x	x
Subtotal	35	40	39	31	42
5 SMALL GAME-MAMMAL SPECIES					
Abert Squirrel	x			x	
Desert Cottontail	x	x	x	x	x
Mountain cottontail	x	x	x	x	x
Pigmy Cottontail		x	x		x
Snowshoe Hare	x	x	x	x	x
Subtotal	4	4	4	3	3

Game Species of Utah	REGION: Southeastern	Southern	Central	Northeastern	Northern
12 SMALL GAME-UPLAND BIRD SPECIES					
Blue Grouse	x	x	x	x	x
California Quail	x	x	x	x	x
Chukar	x	x	x	x	x
Gambels Quail	x	x			
Hungarian Partridge			x		x
Merriam's Turkey	x	x		x	
Ring-necked Pheasant	x	x	x	x	x
Ruffed Grouse	x	x	x	x	x
Sage Grouse	x	x	x	x	x
Sharp-tailed Grouse					x
White-tailed Ptarmigan				x	x
White-winged Pheasant	x	x			
Subtotal	9	9	7	7	9
100 Total Game Species in Utah	78	83	81	73	86

Table 2. Classification of the 466 species of vertebrate wildlife that inhabit six biogeographic areas within Southeastern Utah.

	Biogeographic Areas[1]					
	A	B	C	D	E	F
FISH	14	20	15	15	24	31
Protected-Threatened	(0)	(1)	(1)	(1)	(1)	(1)
Protected-Endangered	(0)	(3)	(2)	(1)	(1)	(2)
Protected-Nongame	(10)	(11)	(9)	(10)	(12)	(16)
Protected-Game	(4)	(5)	(3)	(3)	(10)	(12)
AMPHIBIANS	6	5	6	7	7	10
Protected-Nongame	(1)	(1)	(1)	(1)	(1)	(2)
Unprotected-Nongame	(5)	(4)	(5)	(6)	(6)	(8)
REPTILES	18	14	15	14	21	28
Unprotected-Nongame	(18)	(14)	(15)	(14)	(21)	(28)
BIRDS	242	244	242	235	251	262
Protected-Extirpated	(1)	(1)	(1)	(1)	(1)	(1)
Protected-Threatened	(0)	(0)	(0)	(0)	(0)	(0)
Protected-Endangered	(2)	(2)	(2)	(2)	(2)	(2)
Protected-Nongame	(199)	(202)	(202)	(193)	(208)	(217)
Protected-Game	(39)	(38)	(36)	(38)	(39)	(41)
Unprotected-Nongame	(1)	(1)	(1)	(1)	(1)	(1)
MAMMALS	84	80	80	65	66	90
Protected-Threatened	(0)	(0)	(0)	(0)	(0)	(0)
Protected-Endangered	(1)	(1)	(1)	(1)	(0)	(1)
Protected-Extirpated	(2)	(2)	(2)	(0)	(2)	(2)
Protected-Game	(18)	(19)	(19)	(12)	(16)	(19)
Unprotected-Extirpated	(0)	(0)	(0)	(0)	(0)	(0)
Unprotected-Nongame	(63)	(58)	(58)	(52)	(53)	(62)
Total Protected Species	277	286	279	263	293	317
TOTAL:	364	363	358	336	369	421

[1] Biogeographic areas of southeastern Utah
A- Wasatch Plateau east of Skyline Drive
B- West Tavaputs Plateau
C- East Tavaputs Plateau
D- San Rafael Swell and Desert
E- Henry Mountains and Burr Desert
F- Mountains and Deserts south of I-70 in Grand and San Juan counties

VERTEBRATE SPECIES OF WILDLIFE HAVING HIGH INTEREST TO THE STATE OF UTAH

Class of Animal	Number of species		
	Statewide[1]	SER[2]	Valley Camp of Utah
Fish	33	20	2
Amphbians	3	2	1
Reptiles	10	4	2
Birds	104	95	23
Mammals	61	40	13
TOTAL	211	161	51

1. Utah Division of Wildlife Resources as the state of Utah's wildlife authority recognizes 211 species of vertebrate wildlife that inhabit the state as being of high interest. High interest wildlife represent all game species and all species having significant economic importance from either a comsumptive or nonconsumptive perspective or special asthetic, scientific or educational values. This list includes all federally listed threatened or endangered species of wildlife.

2. Evaluation of data presented in Utah Division of Wildlife Resources publication No. 78-16, " Species List of Vertebrate Wildlife That Inhabit Southeastern Utah" shows that 161 of the 211 species of the states high interest wildlife inhabit the Southeastern Region (SER) of the state on occasion or during different seasons of the year.

LITERATURE CITED

Bailey, R. M., J.E. Fitch, E.S. Herald, E.A. Lachner, C.C. Lindsey, C.R. Robins and W.B. Scott. 1970. A list of common and scientific names of fishes from the United States and Canada. American Fisheries Society Special Publication No. 6. 149 pp.

Behle, W.H. and M.L. Perry. 1975. Utah birds; guide, check-list and occurrence charts. Utah Museum of Natural History. University of Utah, Salt Lake City, Utah. 144 pp.

Burt, W.H. and R.P. Grossenheider. 1976. A field guide to the mammal. Houghton Mifflin Company. Boston, Massachusetts. 289 pp.

Durrant, S.D. 1952. Mammals of Utah. Museum of Natural History. University of Kansas, Lawrence, Kansas. 6:1-549.

Eddy, Samuel. 1969. The freshwater fishes. Wm. C. Brown Company Publishers. Dubugue, Iowa. 286 pp.

Hayward, C.L., C. Cottom, A.M. Woodbury and H.H. Frost. 1976. Great Basin Naturalist Memoirs: Birds of Utah. Brigham Young University Press. Provo, Utah. 229 pp.

Holden, P.B. 1973. Distribution, abundance and life history of the fishes of the upper Colorado River Basin. Utah State University. 59 pp.

Peterson, R.T. 1969. A field guide to western birds. Houghton Mifflin Company. Boston, Massachusetts. 366 pp.

Robbins, C.S., B. Bruun and H.S. Zim. 1966. A guide to field identification: birds of North America. Golden Press. New York City, New York. 340 pp.

Siglen, W.F. and R.R. Miller. 1963. Fishes of Utah. Utah State Department of Fish and Game. Salt Lake City, Utah. 203 pp.

Sparks, E.A. 1974. Checklist of Utah wild mammals. Utah Division of Wildlife Resources Publication 74-3. Salt Lake City, Utah.

Stebbins, R.C. 1966. A field guide to western reptiles and amphibians. Houghton Mifflin Company. Boston, Massachusetts. 279 pp.

Tanner, W.W. 1975. Checklist of Utah amphibians and reptiles. Proceedings of the Utah Academy of Sciences, Arts and Letters. Vol. 52 (1):4-8.

Udvardy, M.D.F. and S. Rayfield. 1977. The Audubon Society field guide to North American birds -- western region. Published by Alfred A. Knopf, Inc. Chanticleer Press, Inc., New York. 855 pp.

Appropriations No. 01-59-09
Archives Approval No. 7900014

UNDERGROUND MINING PERMIT APPLICATION
MINIMUM REQUIREMENTS FOR RECLAMATION
AND OPERATION PLAN

Permanent Regulatory Program
Subchapter G - Part 784

Volume III

L. GAS & MINING

Valley Camp of Utah, Inc.
Scofield Route
Helper, Utah 84526

TABLE OF CONTENTS

VOLUME III

OSM Regulation		Page
*	ACKNOWLEDGEMENT OF THE STATE OF UTAH'S GENERAL REQUIREMENTS FOR QUALIFICATIONAL FORMAT AND CONTENT	v
*	INTRODUCTION	1
784.11	OPERATING PLAN: GENERAL	2
784.12	EXISTING STRUCTURES	9
784.13	RECLAMATION PLAN: GENERAL	22
784.14	PROTECTION OF HYDROLOGIC BALANCE	35
784.15	POST MINING LAND USE	48
784.16	PONDS, IMPOUNDMENTS, BANK, DAMS, AND EMBANKMENTS	55
784.17	PROTECTION OF PUBLIC PARKS AND HISTORIC PLACES	55
784.18	RELOCATION OR USE OF PUBLIC ROADS	55
784.19	UNDERGROUND DEVELOPMENT WASTE	56
784.20	SUBSIDENCE CONTROL PLAN	82
784.21	FISH AND WILDLIFE PLAN	84
784.22	DIVERSIONS	89
784.23	OPERATION PLAN: MAPS AND PLANS	89
784.24	TRANSPORATION FACILITIES	92
784.25	RETURN OF COAL PROCESSING WASTE TO ABANDONED UNDERGROUND WORKS	92
784.26	AIR POLLUTION CONTROL PLAN	93

TABLE OF CONTENTS

VOLUME III
(continued)

	Page
BIBLIOGRAPHY	95
APPENDIX A - Detailed Cost Estimate for Reclamation Plan	
APPENDIX B - Recommended Reseeding Mixture	
APPENDIX C - Subsidence Control Monitoring Program	
APPENDIX D - State of Utah, Division of Wildlife Resources, Fish and Wildlife Plan	

LIST OF FIGURES

Figure	Title	Page
3-1	Projected tonnage by year per seam for the Belina mines (Revised)	6
3-2	Major Equipment List - Existing and Projected	7
3-2A	Typical Entrance Sign	8A
3-2B	Typical Signs	8B
3-3	Existing Structures Construction Dates	16
3-4	Load-out Facilities Area Sedimentation Ponds Design	18
3-5	Belina Mines Site Sedimentation Pond Design	19
3-6	Concrete Reclaim Tunnel Cross Section	20
3-6A	Culinary Well, X-Section	20A
3-6B	Belina Sewage Treatment	20B
3-6C	Concrete Filter Pond	20C
3-6D	Location of Single Fence Check Dams	20D
3-6E	004 Sediment Pond Decant Rev.	20E
3-6F	Belina Mine Wash Bay & Retaining Wall Locations	20F
3-6G	Truck Scale Location and Approach Utah #2	20G
3-7	Barrier Seal Design	21
3-8	Time Table for Reclamation Activity	23
3-9	Barrier Seal Design	34
3-10	Generalized Columnar Section - Eccles Canyon Area	38
3-11	Barrier Seal Design	42
3-12	Surface Water Baseline Monitoring Parameters	44
3-13	Water Quality Monitoring Schedule for Valley Camp Mine Discharge	45

RECEIVED
JAN 22 1987
DIVISION OF OIL, GAS & MINING

Figure	Title	Page
3-14	Comments by Della L. Madsen and Robert G. and Hilda M. Hammond Concerning Valley Camp's Proposed Post Mining Land Use for Their Land	52
3-15	Comments by Nick and Helen Marakis Concerning Valley Camp's Proposed Post Mining Land Use for Their Land	53
3-16	Comments by Milton Oman Concerning Valley Camp's Proposed Post Mining Land Use for Their Land	54
3-17	Estimated Precipitation Depths for Various Return Periods and Duration at Clear Creek, Summit, Utah	58
3-18	Velocities for Upland Method of Estimating Tc	59
3-19	Calculation of Flow Rates by Section	61
3-20	Longitudinal Geometry for Valley Fill	63
3-21	Grainsize Distribution	65
3-22	Compacting Test Results	68
3-23	Embankment Stability Analysis Drained	69
3-24	Embankment Stability Analysis Steady State-Full Drainage into II	70
3-25	Embankment Stability Analysis Steady State-II Partial Clogged	71
3-26	Embankment Stability Analysis Steady State-Full Drainage into III	72
3-27	Typical Cross Section Through Existing Road and Proposed Ditch C-B	76
3-28	Cross Section Through Ditch and Typical Design Configurations	77
3-29	Flow Rates to be Carried by Proposed Ditches	78
3-30	Summary of Calculated Flow Depths in Proposed Ditches	78
3-31	Inlet Configuration for Culvert	80
3-32	Typical Road Cross Sections	92A

ACKNOWLEDGEMENT OF THE STATE OF UTAH'S GENERAL REQUIREMENTS FOR QUALIFICATIONAL FORMAT AND CONTENT

On November 3, 1980, the State of Utah, Department of Natural Resources, Division of Oil, Gas, and Mining issued a revised general guideline for organizational format and content for permit applications. The permit applications will be for underground coal mining operations pursuant to the Utah Coal Mining and Reclamation Act and rules and regulations promulgated thereunder.

At the date of this revision Valley Camp of Utah, Inc.'s permit application was substantially complete and had been organized on the basis of the OSM permanent regulatory program. The organization of the application is explained on pages v and vi of this Volume III of the permit application.

In an effort to relate the permit application with the State of Utah's revised guidelines for organizational format and content and also in an effort to permit efficient review of the application a new Table of Contents has been provided on the following page. This new Table of Contents relates the State of Utah's general guidelines to the previously completed Valley Camp of Utah, Inc.'s permit application.

STATE OF UTAH RECOMMENDED FORMAT AND CONTENT

CROSS REFERENCE

Chapter I, (Volume I)

Introduction and Summary of Permit Application

1.1	Scope of Operation	Vol. I, pp. 2 & 3
1.2	Summary of Environmental Impacts	Vol. I, p. 41
1.3	Introduction to Document Organization and Reviewers Checklist	Vol. I, p. 1
1.4	Acknowledgements	Vol. I, p. 39

Chapter II, (Volume I)

Legal, Financial, Compliance and Related Information

2.0	Table of Contents	Vol. I, pp. i & ii
2.1	Scope	Vol. I, pp. 1-3
2.2	Identification of Interests (782.13)	Vol. I, pp. 4-13
2.3	Compliance Information (782.14)	Vol. I, pp. 14-16
2.4	Right of Entry and Operation Information (782.15)	Vol. I, pp. 17-23
2.5	Relationship to Areas Designated Unsuitable to Mining (782.16)	Vol. I, pp. 24-25
2.6	Permit Term (782.17 & 786.25)	Vol. I, p. 26
2.7	Personal Injury and Property Damage Insurance (782.18)	Vol. I, p. 28
2.8	Proposed Performance Bond (800, 805, 806)	Vol. III, Sec. 784.13
2.9	Other Licenses and Permits (782.19)	Vol. I, pp. 29-35
2.10	Location of Public Office for Filing Application	Vol. I, pp. 37-38
2.11	Newspaper Advertisement (782.21, 786.11 (a))	Vol. I, p. 36

STATE OF UTAH RECOMMENDED FORMAT AND CONTENT

CROSS REFERENCE

Chapter III, (Volume III)

Operation and Reclamation Plan (784.0)

3.0	Table of Contents	
3.1	Scope	
3.2	Surface Facilities/Construction Plans	
3.2.1	Site Selection and Preparation (784.12)	Vol. III, pp. 9-21
3.2.2	Portals (784.11)	Vol. III, pp. 2-5
3.2.3	Surface Buildings and Structures (784.12)	Vol. III, pp. 9-21
3.2.4	Coal Handling, Processing, Preparation and Storage (784.11, 784.25)	Vol. III, pp. 5 & 92
3.2.5	Power System, Transmission Lines, Substations, Mine Feeders (784.11)	Vol. III, pp. 9-21
3.2.6	Water Supply System	Vol. III, p. 5
3.2.7	Sewage System (784.12)	Vol. III, p. 9
3.2.8	Water Diversion Structures (784.22)	Vol. III, p.89
3.2.9	Sedimentation Control Structures and Water Treatment Facilities (784.12)	Vol. III, pp. 9-21
3.2.10	Transportation, Roads, Parking Areas, Railroad Spurs (784.24)	Vol. III, p. 92
3.2.11	Total Area for Surface Disturbance During Permit Term	Vol. III, Appendix A
3.2.12	Additional Areas for Surface Disturbance for Life of Mine	N/A
3.2.13	Detailed Construction Schedule	N/A
3.3	Operation Plan	
3.3.1	Mining Plans (784.11)	Vol. III, pp. 2-8
3.3.1.1	Orientation and Multiple Seam Considerations (784.11)	Vol. III, pp. 2-8
3.3.1.2	Portals, Shafts and Slopes (784.11)	Vol. III, pp. 2-8
3.3.1.3	Mining Methods, Room and Pillar, Longwall (784.11)	Vol. III, pp. 2-8
3.3.1.4	Projected Mine Development, Mains, Submains, Panels, etc.	Vol. IV, Map B
3.3.1.5	Retreat Mining	Vol. IV, Map B
3.3.1.6	Roof Control, Ventilation, Water Systems, Dust Suppression, Dewatering, Electrical, Etc. (784.11)	Vol. III, pp. 2-8

3.3.2	Barrier Pillars	Vol. IV, Map B
3.3.2.1	Protection of Oil and Gas Wells (784.11)	Vol. III, p. 5a
3.3.2.2	Protection of Surface Structures Streams (784.20)	Vol. III, p. 82
3.3.2.3	Property Boundaries	Vol. IV, Map A
3.3.2.4	Outcrop Protection	N/A
3.3.2.5	Other	N/A
3.3.3	Conservation of Coal Resource (817.59, 784.11)	Vol. III, pp. 2-8
3.3.3.1	Projected Maximum Recovery (784.11)	Vol. III, pp. 2-8
3.3.3.2	Justification for Non-recovery (784.11)	Vol. III, pp. 2-8
3.3.3.3	Access to Future Reserves	Vol. IV, Map B
3.3.4	Equipment Selection (784.11)	Vol. III, pp. 7-8
3.3.4.1	Surface Equipment	N/A
3.3.4.2	Underground Equipment (784.11)	Vol. III, pp. 7-8
3.3.5	Mine Safety, Fire Protection, and Security (784.11)	Vol. III, pp. 2-8
3.3.5.1	Signs	Not discussed in permit application.
3.3.5.2	Fences and Gates	Not discussed in permit application.
3.3.5.3	Fire Protection - Facilities - Coal Stockpiles, Refuse Piles - Coal Seam	Vol. III, p. 5a
3.3.5.4	Explosives - Storage and Handling - Use	Vol. III, p. 5a
3.3.6	Operations Schedule (784.11)	Vol. III, pp. 5a-6
3.3.6.1	Annual Production Per Year for Permit Term (784.11)	Vol. III, p. 6
3.3.6.2	Operating Schedule-Days-Shifts	Vol. III, p. 5a
3.3.6.3	Operation Employment	Vol. III, p. 5a
3.3.7	Mine Permit Area	Vol. IV, Map A
3.3.7.1	Projected Mining by Year	Vol. IV, Map B
3.3.7.2	Acreage and Delineation of Mine Permit Area	Vol. IV, Map A
3.3.8	Mine Plan Area	Vol. IV, Map A
3.3.8.1	Projected Mining by Future Permit Term for the Planned Life of Mine	Vol. IV, Map B

3.4 Environmental Protection

3.4.1	Preservation of Land-Use (784.15)	Vol. III, pp. 48-54
3.4.1.1	Projected Impacts of Mining on Current and Future Land-Use (784.15, 783.22)	Vol. III, p. 48 Vol. II, p. 104
3.4.1.2	Control Measures to Mitigate Impacts (784.13 - .26)	Vol. III, pp. 22-94

3.4.2	Protection of Human Values (783.12)	Vol. II, pp. 3-4
3.4.2.1	Projected Impacts of Mining on Human Values-Historical and Cultural (783.12)	Vol. II, pp. 3-4
3.4.2.2	Control Measures to Mitigate Impacts (783.12)	Vol. II, pp. 3-4
3.4.3	Protection of Hydrologic Balance (784.14)	Vol. III, pp. 35-47
3.4.3.1	Projected Impacts of Mining on Hydrologic Balance (784.14)	Vol. III, pp. 35-47
3.4.3.2	Control Measures to Mitigate Impacts (784.14)	Vol. III, pp. 35-47
3.4.3.3	Monitoring Procedures to Measure Projected Impacts and Control (784.14)	Vol. III, pp. 35-47
3.4.4	Preservation of Soil Resources (783.21)	Vol. II, pp. 83-103
3.4.4.1	Projected Impacts of Mining on Soil Resources (783.21)	Vol. II, pp. 83-103
3.4.4.2	Control Measures to Mitigate Impact (783.21)	Vol. II, pp. 83-103
3.4.5	Protection of Vegetative Resources (783.19)	Vol. II, pp. 39-51
3.4.5.1	Projected Impacts of Mining on Vegetative Resources (783.19)	Vol. II, pp. 39-51
3.4.5.2	Mitigating Measures to be Employed to Reduce Impacts on Vegetative Resources (783.19)	Vol. II, pp. 39-51
3.4.5.3	Monitoring Procedures- Reference Areas, and Revegetation (783.19, 784.13)	Vol. II, pp. 39-51 Vol. III, pp. 22-34
3.4.6	Protection of Fish and Wildlife (783.20)	Vol. II, pp. 52-82
3.4.6.1	Projected Impacts of Mining on Fish and Wildlife (783.20)	Vol. II, pp. 52-82
3.4.6.2	Mitigating Measures to be Employed to Protect Fish and Wildlife (784.21)	Vol. III, pp. 84-88
3.4.6.3	Monitoring Procedures (784.21)	Vol. III, pp. 84-88
3.4.7	Protection of Air Quality (784.26)	Vol. III, pp. 93-94
3.4.7.1	Projected Impacts of Mining Operation on Air Quality (784.26)	Vol. III, pp. 93-94
3.4.7.2	Mitigating Measures to be Employed to Control Air Pollutants (784.26)	Vol. III, pp. 93-94
3.4.7.3	Air Quality Monitoring Plans (784.26)	Vol. III, pp. 93-94

3.4.8	Subsidence Control Plan (784.20)	Vol. III, pp. 82-83
3.4.8.1	Projected Impacts of Subsidence (784.20)	Vol. III, pp. 82-83
3.4.8.2	Control Measures to Mitigate Impacts (784.20)	Vol. III, pp. 82-83
3.4.8.3	Monitoring Procedures to Measure Projected Impacts and Controls (784.20)	Vol. III, pp. 82-83
3.4.9	Waste Disposal Plans (784.25)	Vol. III, p. 92
3.4.9.1	Projected Impacts of Disposal Areas and Methods on Environment (784.25)	Vol. III, p. 92
3.4.9.2	Control Measures to Mitigate Impacts (784.25)	Vol. III, p. 92

3.5 Reclamation Plan

3.5.1	Contemporaneous Reclamation (784.13)	Vol. III, pp. 22-34
3.5.2	Soil Removal and Storage (784.13)	Vol. III, pp. 27-28
3.5.3	Final Abandonment (784.13)	Vol. III, pp. 22-34
3.5.3.1	Sealing of Mine Openings (784.13)	Vol. III, pp. 22-34
3.5.3.2	Removal of Surface Structures (784.13)	Vol. III, pp. 22-34
3.5.3.3	Disposition of Dams, Ponds, and Diversions (784.13)	Vol. III, pp. 22-34
3.5.4	Backfilling and Grading Plans	Vol. IV, Maps D, D-1, D-2, D-3, D-4, D-5
3.5.4.1	Recontouring	Vol. IV, Maps D, D-1, D-2, D-3, D-4, D-5
3.5.4.2	Removal or Reduction of Highwalls	N/A
3.5.4.3	Terracing and Erosion Control (784.13)	Vol. III, pp. 22-34
3.5.4.4	Soil Redistribution and Stabilization	
3.5.5	Revegetation Plan (784.13)	Vol. III, pp. 22-34
3.5.5.1	Soil Preparation (784.13)	Vol. III, pp. 22-34
3.5.5.2	Seeding and Transplanting	Vol. III, pp. 22-34
3.5.5.3	Mulching (784.13)	Vol. III, pp. 22-34
3.5.5.4	Management (784.13)	Vol. III, pp. 22-34
3.5.5.5	Revegetation Monitoring (784.13)	Vol. III, pp. 22-34
3.5.6	Schedule of Reclamation (784.13)	Vol. III, p. 23
3.5.6.1	Detailed Timetable for Completion of Each Major Step in Reclamation (784.13)	Vol. III, p. 23
3.5.6.2	Reclamation Monitoring (784.13)	Vol. III, pp. 22-34
3.5.7	Cost Estimate for Reclamation (784.13)	Vol. III, p. 23
3.5.7.1	Cost Estimate of Each Step of Reclamation (784.13)	Vol. III, p. 23

3.5.7.2 Forecast of Performance Bond During Permit Tern and Forecast of Liability for Life of Mine (784.13) Vol. III, p. 23

3.6 Bibliography Vol. III, pp. 95-96

3.7 Chapter III - Photos (Maps) Vol. IV

86273/89725

STATE OF UTAH RECOMMENDED FORMAT AND CONTENT

CROSS REFERENCE

Chapter IV, (Volume II)

Land Status, Land-use and Postmining Land-Use

4.0	Table of Contents	
4.1	Scope	
4.2	Methodology	
4.3	Land Status	
4.3.1	Surface Land Status/Mine Plan Area (783.15)	Vol. I, pp. 17-23
4.3.1.1	Ownership (782.15)	Vol. I, pp. 17-23
4.3.1.2	Surface Managing Authorities	Vol. I
4.3.1.3	Utility Corridors and Other Right-of-Ways	Vol. I
4.3.1.4	Special Use Permits and Leases	N/A
4.3.2	Mineral Ownership/Mine Plan Area	
4.3.2.1	Coal Ownership and Mines (782.15)	Vol. I, pp 17-23
4.3.2.2	Coal Leases (782.15)	Vol. I, pp. 17-23
4.3.2.3	Mineral Ownership and Mines	
4.3.2.4	Mineral Leases	
4.3.2.5	Oil and Gas Ownership and Wells	
4.3.2.6	Oil and Gas Leases	
4.4	Land Use	
4.4.1	Regional Land-Use (783.22)	Vol. II, pp. 104-109
4.4.2	Land-use in Mine Plan Area (783.22)	Vol. II, pp. 104-109
4.4.3	Land-use During Operations (783.22)	Vol. II, pp. 104-109
4.4.3.1	Affect of Operation on Land-use (784.15)	Vol. III, pp. 48-54
4.4.3.2	Mitigation of Effects of Operation (784.15)	Vol. III, pp. 48-54
4.5	Postmining Land-use (784.15)	Vol. III, pp. 48-54
4.6	Socioeconomic Considerations (783.22)	Vol. III, pp. 104-109
4.7	Bibliography	Vol. II, pp. 112-114
4.8	Chapter IV - Plates (Maps)	Vol. IV

Chapter V, (Volume II)

Historical and Cultural Resources

5.0	Table of Contents	
5.1	Scope	
5.2	Methodology	
5.3	Historical Resources	
5.3.1	Historical Inventory (783.12)	Vol. II, pp. 3-4
5.3.2	History of Mining (783.22)	Vol. II, pp. 104-108
5.3.3	Effects of Mining on Historical Resources (783.12)	Vol. II, p. 4
5.4	Archeological Resources	
5.4.1	Archeological Inventory (783.12)	Vol. II, pp. 3-4
5.4.2	Effects of Mining on Archeological Resources (783.12)	Vol. II, p. 4
5.5	Paleontological	Not addressed in the permit application
5.5.1	Paleontologic Inventory	
5.5.2	Effects of Mining on Paleontologic Resources	
5.6	Public Parks (784.17)	Vol. III, p. 55
5.6.1	Inventory of Public Facilities	
5.6.2	Effects of Mining on Public Facilities	
5.7	Bibliography	Vol. II, pp. 112-119
5.8	Chapter V - Plates (Maps)	Vol. IV

Chapter VI, (Volume II)

Geology

6.0	Table of Contents	
6.1	Scope	
6.2	Methodology	
6.3	Regional Geologic Framework	
6.4	Geology of Project Vicinity	
6.4.1	Stratigraphy (783.14)	Vol. II, p. 7, Figure 2-1
6.4.2	Structure (783.14)	Vol. II, pp. 6-19

6.5	Geology of Coal Bed and Adjacent Units	
6.5.1	Exploration and Drilling (783.14)	Vol. II, pp. 15-19, Vol. IV, Map H
6.5.2	Stratigraphy (783.14)	Vol. II, pp. 6-19
6.5.3	Structure (783.14)	Vol. II, pp. 6-19
6.5.4	Detailed Columns of Interest and Cross-Sections (783.14)	Vol. II, pp. 6-9, Vol. IV, Map B-1A & B-1B
6.5.5	Coal Reserves	Vol. IV, Map B
6.5.5.1	Reserve Calculations	
6.5.5.2	Coal Quality and Characteristics, Sulfur Forms, Clay and Alkalinity (783.14)	Vol. II, pp. 15-19
6.5.6	Adjacent Units (Overburden) (783.14)	Vol. II, pp. 15-19
6.5.6.1	Rock Characteristics, Acid-toxic, Pyrite, Clay and Alkalinity (783.14)	Vol. II, pp. 12-13
6.6	Geologic Effects of Mining	Vol. III, pp. 5B
6.6.1	Mining Hazards	
6.6.2	Surface Hazards	
6.6.3	Impacts of Mining	
6.7	Bibliography	Vol. II, pp. 112-119
6.8	Chapter VI - Plates (Maps)	Vol. IV

Chapter VII, (Volume II)

Hydrology

7.0	Table of Contents	
7.1	Groundwater Hydrology (783.15)	Vol. II, pp. 20-27
7.1.0	Scope	
7.1.1	Methodology	
7.1.2	Existing Groundwater Resources	
7.1.2.1	Regional Groundwater Hydrology	
7.1.2.2	Mine Plan Area Aquifers -Aquifer Characteristics -Aquifer Recharge, Movement, Storage, (Piezometric Surfaces) -Aquifer Water Quality -Wells and Users	

7.1.3	Groundwater Development and Mine Dewatering	
7.1.3.1	Water Supply (783.17) -Quantity and Quality -Water Rights	Vol. II, p. 36
7.1.3.2	Mine Dewatering (784.14) -Quantity and Quality -Water Rights	Vol. III, pp. 35-47
7.1.4	Effects of Mining Operation on Groundwater (784.14)	Vol. III, pp. 35-47
7.1.4.1	Hydrologic Balance (784.14)	Vol. III, pp. 35-47
7.1.4.2	Quantity (784.14)	Vol. III, pp. 35-47
7.1.5	Mitigation and Control Plans (784.14)	Vol. III, pp. 35-47
7.1.6	Groundwater Monitoring Plan (784.14)	Vol. III, pp. 35-47

7.2 Surface Water Hydrology (783.16) Vol. II, pp. 28-35

7.2.0	Scope	
7.2.1	Methodology	
7.2.2	Existing Surface Water Resources	
7.2.2.1	Regional Surface Water Hydrology	
7.2.2.2	Mine Plan Area Watersheds and Streams, Springs, and Seeps Characteristics, Streams Characteristics, Watershed Characteristics	
7.2.3	Surface Water Development, Control and Diversions	
7.2.3.1	Water Supply -Quantity and Quality -Water Rights	
7.2.3.2	Sedimentation Control Structures and Diversions (784.12) -Watershed Characteristics -Soil Loss and Sedimentation -Runoff Characteristics -Design Storms -Peak Flows -Diversion and Impoundment Structures -Design Volume -Sediment Volume -Seepage	Vol. III, pp. 9-21
7.2.4	Effects of Mining on Sufrace Water (784.14)	Vol. III, pp. 35-47
7.2.4.1	Hydrologic Balance (784.14)	Vol. III, pp. 35-47
7.2.4.2	Qaulity (784.14)	Vol. III, pp. 35-47
7.2.5	Mitigation and Control Plans (784.14)	Vol. III, pp. 35-47
7.2.6	Surface Water Monitoring Plans (784.14)	Vol. III, pp. 35-47

7.3	Alluvial Valley Floor Determination	N/A
7.4	Bibliography	Vol. II, pp. 112-119
7.5	Chapter VII - Plates (Maps)	Vol. IV

Chapter VIII, (Volume II)

Soil Resources (783.21) — Vol. II, pp. 83-103

8.0	Table of Contents	
8.1	Scope	
8.2	Methodology	
8.3	Soil Resources Information of Mine Plan Area (783.21)	
8.3.1	Soils Identification	
8.3.2	Soils Description	
8.3.3	Present and Potential Productivity of Existing Soils	
8.4	Prime Farmland Investigation and Determination (783.27)	Vol. II, p. 110
8.5	Soils, Physical and Checmial Properties of Soils and Results of Analysis, Tests and Trials (784.13 and 817.21)	
8.6	Use of Selected Overburden Materials or Substitutes (783.21 and 817.22)	
8.7	Plans for Removal, Storage and Protection of Soils (784.13, 817.22 and 817.23)	
8.8	Plans for Redistribution of Soils (784.13 and 817.24)	
8.9	Nutrients and Soil Amendments	
8.10	Effects of Mining Operations on Soils, Nutrients and Soil Amendments to be Used (817.25)	
8.11	Mitigation and Control Plans	
8.12	Bibliography	Vol. II, pp. 112-119
8.13	Chapter VIII, Plates (Survey Map)	Vol. IV

Chapter IX, (Volume II)

Vegetation Resources (783.19) — Vol. II, pp. 39-51

9.0	Table of Contents
9.1	Scope
9.2	Methodology
9.3	Existing Resources (See Vegetation Guidelines)

9.3.1	General Site Description	
9.3.2	Vegetation Types: for Each Vegetation Type	
9.3.2.1	Cover Data	
9.3.2.2	Production Data	
9.3.2.3	Tree Data	
9.3.2.4	General Description per Vegetation Guideline	
9.3.2.5	Species List	
9.3.2.6	Total Acres in Plan Area	
9.3.2.7	Total Acres of Vegetation Types to be Disturbed	
9.3.2.8	Reference Area Supporting Data (or Alternative Methods)	
9.4	Threatened and Endangered Species	
9.5	Effects of Mining Operations on Vegetation	
9.6	Mitigation and Management Plans	
9.7	Revegetation Methods and Justifications (784.13)	Vol. III, pp. 22-34
9.8	Revegetation Monitoring (784.13)	Vol. III, pp. 22-34
9.9	Bibliography (UMC 771)	Vol. II, pp. 112-119
9.10	Chapter IX - Plates (Maps)	Vol. IV

Chapter X, (Volume II)

Fish and Wildlife Resources — Vol. II, pp. 52-82F

10.0	Table of Contents	
10.1	Scope	
10.2	Methodology	
10.3	Existing Fish and Wildlife Resources (See Wildlife Guidelines)	
10.3.1	Wildlife Habitats in Mine Plan Area	
10.3.2	Wildlife	
10.3.2.1	Aquatic Wildlife and Habitat and Value Determination	
10.3.2.2	Terrestrial Wildlife and Habitat and Value Determination	
10.3.2.3	Mammals	
10.3.2.4	Birds	
10.3.2.5	Reptiles and Amphibians	
10.3.3	Species of Special Signifigance	
10.3.3.1	Threatened and Endangered Species	
10.3.3.2	Raptors	

10.4	Expected Impacts of Mining Operations on Fish and Wildlife	
10.5	Mitigation and Management Plans	Vol. III, pp. 84-88A
10.6	Stream Buffer Zone Determination by Division of Oil, Gas and Mining	
10.7	Fish and Wildlife Monitoring	
10.8	Bibliography (771 Information)	Vol. II, pp. 112-119, &
10.9	Chapter X - Plates (Maps)	Vol. III, pp. 95-96 Vol. IV

Chapter XI, (Volume II)

Climatology and Air Quality (783.18) — Vol. II, pp. 37-38

11.0	Table of Contents	
11.1	Scope	
11.2	Methodology	
11.3	Existing Environment	
11.3.1	Precipitation	
11.3.2	Temperature	
11.3.3	Evaporation	
11.3.4	Relative Humidity	
11.3.5	Wind	
11.4	Effects of Mining Operation on Air Quality (784.26)	Vol. III, pp. 93-94
11.4.1	Estimate of Uncontrolled Emissions	
11.4.2	Description of Control Measures	
11.4.3	Estimate of Controlled Emissions	
11.4.4	Estimated Cost of Emission Control	
11.5	Climatological and Air Quality Monitoring	Vol. III, pp. 95-96
11.6	Bibliography	Vol. II, pp. 112-119
11.7	Chapter XI - Plates (Maps)	Vol. IV

89736/86268

Chapter XII, (Volume III)

Geotechnical — Vol. III, pp. 5B

12.0 Table of Contents
12.1 Scope
12.3 Methodology
12.3 Underground Mine Design

12.3.1 Geotechnical Tests and Analysis
12.3.2 Coal Pillar Design
12.3.3 Roof Span Design

12.4 Surface Subsidence Effects of Mining (784.20) — Vol. III, pp. 82-83

12.4.1 Subsidence Mechanisms
12.4.2 Projected Subsidence Effects
12.4.3 Subsidence Control and Mitigation Methods
12.4.4. Subisdence Monitoring Plan
-Method
-Monuments
-Schedule

12.5 Stability Analysis of Earthen Structures (784.12) (789.19) — Vol. III, pp. 9-21; Vol. III, pp. 56-81

12.5.1 Type of Structure
12.5.1.1 Hazard Considerations
-Impounding
-Non-impounding
-Location
12.5.2 Construction Material Characteristics
12.5.3 Foundation Material Characteristics
12.5.4 Hydrologic Characteristics
12.5.5 Design and Construction Plans
12.5.6 Stability Analysis

12.6 Bibliography — Vol. III, pp. 95-96
12.7 Chapter XII - Plates (Maps) — Vol. IV

Chapter XIII

Designs Vol. III, pp. 9-21

13.0 Table of Contents
13.1 Scope
13.2 Methodology
13.3 Detail Designs
-Compliance with Performance Standards
13.4 Bibliography Vol. III, pp. 95-96
13.5 Chapter XIII - Plates (Maps) Vol. IV

Chapter XIV, (Volume I)

Consultation and Coordination (771.23) Vol. I, pp. 39-40

14.0 Table of Contents
14.1 Scope
14.2 Federal Consultation and Coordination
14.3 State Consultation and Coordination
14.4 Local Consultation and Coordination
14.5 Consultation and Coordination with Entities of Interest
14.6 Other Consultation and Coordination

INTRODUCTION

Volume III of this application addresses Part 784 of Subchapter G, O.S.M. Permanent Rules and Regulations and presents the Reclamation and Operating Plans describing the Mine Plan Area and the permit area. Sources of the data have been Valley Camp Mine Plans, Federal and State agencies, general literature, and site specific studies by consultants.

Additional information on the Reclamation and Operating Plan is included in Volume IV, Maps and Cross Sections. This information is referenced throughout Volume III.

Some sections on Reclamation and Operating Plans require prior regulatory authority decisions. In those instances the correspondance with the regulatory authority is included or referenced as part of this volume.

784.11 OPERATIONS PLAN

Valley Camp, Inc., currently operates one active mine, Belina No. 1, in the Upper O'Connor seam within the proposed permit area. This mining is currently being conducted pursuant to 30 CFR 211 Mine Plan, approved February 10, 1977, and Utah Division of Oil, Gas and Mining Permits ACT/007/001 and ACT/007/014. This approved Plan and Permits determine mining techniques currectly being employed. Mining methods in this room and pillar operation feature continuous mining sections in conventional place changing routines with shuttle car and conveyor belt haulage. Secondary recovery is practiced in panels utilizing a maximum recovery system of splitting and recovering pillars. Where the subsidence plan dictates, recovery is limited to provide permanent support of surface area. Refer to Section 784.20, Subsidence Control, of this Volume, and Map K, Subsidence Control Map, Volume IV.

Mining in the Belina No. 2 mine will occur in the Lower O'Connor seam and will be identical in method and plan to the Belina No. 1 mine. When encountered, the McKinnon seam will also be mined using methods and plans duplicating those of the Belina mines. No mining of the McKinnon seam is anticipated during this initial 5-year permit period. For safety and recovery maximization, all multiple seam mining will be sequenced from top to bottom (Dunrud, 1976), where interburden of coal seams is insufficient to assure no degradation of upper seam recovery.

The mine portal facilities for both mines are located at a coal outcrop in upper Whiskey Canyon, south of and connecting to Eccles Canyon. The mined coal from the No. 1 Mine is transported through, and out of, the mine by conveyor belts to a 14,000 ton stock out tube and reclaim facility. From here, the coal is hauled by truck to the main preparation plant and load-out facilities located on Highway 96 (shown on Operations Map C, Volume IV). In the future, an overland conveyor will be installed to transport the coal from the mine portals to the preparation plant facilities. The proposed conveyor is shown on Maps M-1 through 7. The overland conveyor and associated surface disturbances are included as part of this 5-year permit application.

Projected tonnage by year, per seam, for the first 5-year permit period, is shown in Figure 3-1, as well as anticipated tonnage for ensuing 5-year periods for the life of each mine.

Mine facilities include portal sites, roads, preparation plant and load-out facilities, sedimentation ponds, proposed conveyor system and other ancillary items, such as wastewater treatment and bathhouse facilities. There is, at present, one active portal site (Belina No. 1). A second portal site (Belina No. 2) located almost directly below that of Belina No. 1 Mine is under construction.

The third portal site within the mine permit area, Utah No. 2, is located just north of the preparation plant, and allowed for entry into the Upper O'Connor seam at that location. This mine was officially idled in July, 1978, and the main entries were sealed. Ventilation is being provided to the seals, as well as all unsealed entries to prevent any gas accumulation. The location of this mine is shown on Coal Map, Map B, Volume IV. All portals will be sealed and sites regraded and reclaimed upon completion of mining activity. All roads, buildings, conveyors and preparation facilities will be removed at the end of the life of the mines, unless prior agreement is made with the Regulatory Authority. Specific plans are included in Section 784.13, Reclamation Plan.

Engineering methods are standard engineering practices and will comply with all legal requirements. Ventilation plans, roof support plans, and all other MSHA required plans are on file with MSHA and in the mine office and are based on current engineering standards. A list of these plans is found in Volume I, 782.19, Other Licenses and Permits. The applicant employs a full time surveying and engineering staff.

All structures, dams, embankments, topsoil storage, mine facilities, and pollution control facilities, are designed

to meet OSM requirements. There are four sedimentation ponds existing at the mine site (See Reclamation Maps, Maps D-1 and D-3 for locations). All were constructed on parallel lifts and meet OSM requirements. All are used to protect the quality of surface water run-off and will be maintained by the mine personnel. In addition to normal maintenance, ponds will be cleaned when they reach sixty (60) percent of sediment capacity. The sedimentation ponds will be removed and reclaimed at the end of the mine life. Pond design performance, and removal, is addressed specifically in Section 784.16, Existing Structures.

The topsoil storage area is shown on the Reclamation Map, Map C-4, Volume IV. The topsoil will be stored for the life of the mine in a stockpile or used in reclamation efforts as operations permit. The stockpile at the Belina mine sites was placed by shovel and trucks and will be maintained by seeding and other erosion control measures, as needed. The topsoil will also be removed, stockpiled and stabilized at transfer points along the proposed conveyor route when construction begins. At the end of the mine life, the topsoil will be re-distributed. Topsoil removal, storage, and replacement are described specifically in Section 784.13, Reclamation Plan. The Utah 2 area was constructed prior to topsoil removal regulation, and, therefore, no topsoil is in storage from that area.

Pollution control programs and facilities are devised and constructed to prevent water and air pollution. Water pollution control is achieved through use of sedimentation ponds, filtering ponds, sewage disposal and treatment units, spill prevention and control countermeasure plans and hydrologic monitoring programs. Air pollution control measures will be for fugitive dust control. Measures will include water sprays, conveyor covers, dust flaps and road watering or paving. Air pollution control measures are covered specifically in Section 784.26.

The water supply for the Belina Mine Portal Area comes from a well at the site. The water supply for the Utah No. 2 Load-out area comes from a well at that site, and the water supply for the general office and warehouse is obtained from the Alpine School water system.

Fire protection for the mine and plant facilities is in accordance with State and Federal regulations. The only coal in storage at the mine or load-out facilities is in active stockpiles. If heated areas develop, the coal is removed with a front-end loader and spread out to cool, or buried before a fire breaks out.

Explosives are not regularly used in the mining process. If required for special purposes, the explosives are purchased

in small quantities for immediate use and are stored underground in accordance with State and Federal regulations.

The mine is scheduled to work 240 days per year, at 12 unit shifts per day (6 sections for 2 shifts). The 3rd shift will be used for maintenance. The mine employs approximately 250 workers and 35 supervisors.

Provisions to protect oil and gas wells by leaving barriers in the coal seam are made specific to the particular well involved and require compliance with State and Federal Regulations.

The geologic effects of mining and existing geotechnical information is condsidered in developing a roof control plan for the mine. Valley Camp, Inc., has a Roof Control Plan that has been approved by the State and Federal Regulatory Agencies. State and Federal agencies base their approvals on specific site conditions, mining experience in the area, and geologic and geotechnical information available. The approved roof control plan addresses size of underground openings, pillar size, roof support methods, cross cut centers, mining techniques, room centers, and pillar recovery methods.

Figure 3-1
Projected Tonnage by Year Per Seam for
the Belina Mines
During the Mine Permit Term

Belina No. 1 Mine (Upper O'Connor)	Belina No. 2 Mine (Lower O'Connor)
1984 - - - 729,000 TONS	1984 - - - 243,000 TONS
1985 - - - 729,000 TONS	1985 - - - 243,000 TONS
1986 - - - 729,000 TONS	1986 - - - 243,000 TONS
1987 - - - 729,000 TONS	1987 - - - 243,000 TONS
1988 - - - 729,000 TONS	1988 - - - 243,000 TONS

Anticipated Tonnage by 5 Year Increments
Per Seam for the Belina Mines
for Life of Each Mine

Belina No. 1 Mine (Upper O'Connor)	Belina No. 2 Mine (Lower O'Connor)
1988-1993 - - - 6,000,000 TONS	1988-1993 - - - 3,625,000 TONS
1993-1998 - - - 6,000,000 TONS	1993-1998 - - - 3,625,000 TONS
1998-2003 - - - 6,000,000 TONS	1998-2003 - - - 3,625,000 TONS
2003-2008 - - - 6,000,000 TONS	2003-2008 - - - 3,625,000 TONS
2008-2013 - - - 6,000,000 TONS	2008-2013 - - - 3,625,000 TONS

Figure 3-2

MAJOR EQUIPMENT LIST
EXISTING AND PROJECTED

VALLEY CAMP OF UTAH, INC.

Equipment (Currently in Use)	Type and Model	Quantity
Section Equipment		
Continuous Miner	Joy 12 CMB	6
Shuttle Car	Joy 10SC	12
Roof Bolter	Galis 320A	6
	LNTD-2	5
Feeder Breaker	Long Airdox	6
Mantrip	Elmac P14-4	5
Electrical Equipment		
1000 KVA Transformer		8
750 KVA Transformer		1
500 KVA Transformer		2
225 KVA Transformer		3
H. V. Switch House	Pemco	11
200 KW DC Rectifier	Pemco	6
Other Mine Equipment		
Ramcar	Kersey PAST-24	4
Personnel Carrier	Jeffery 4114D	1
	Kersey PAST-24	1
Wheel Loader	CAT 980B	1
Main Fan	Jeffery 8HU-84	1
Tractor	Elmac 605 BH	3
Scoop-Tram	Wagner	2
Road Grader	Huber 850	1
High Pressure Pump	A.C. 75 HP	2
	I.R.-GTB 3" x 11"	3
Air Compressor	Joy R.C.S. 220	2
	G.D. W.B.J.-650	
Load-Out Equipment		
Wheel Loader	CAT 950	1
Tractor	Komatsu D-155A	1
2000 KVA Transformer		1

Equipment (Currently in Use)	Type and Model	Quantity
Load-Out Equipment (continued)		
1000 KVA Transformer		1
850 KVA Transformer		1
225 KVA Transformer		1
Feeder Breaker	Long Airdox	1
Ramcar	Kersey PAST-24	1
Miscellaneous Surface Equipment		
Ambulance	Chevrolet	1
Dump Truck	Chevrolet 2 ton	1

Figure 3-2
(continued)

Equipment (Projected Purchases)	Type and Model	Quantity
Section Equipment		
Continuous Miner		5
Shuttle Car		10
Roof Bolter		5
Feeder Breaker		5
Mantrip		5
Longwall Section		2
Electrical Equipment		
Section Transformer		5
High Voltage Switch House		3
Other Mine Equipment		
Ramcar		5
Personnel Carrier		5
Main Fan		1
Utility Vehicles		6
Scoop-Tram		2
Road Grader		1
Load-Out Equipment		

784.12 EXISTING STRUCTURES

The location of all existing and proposed structures in the Valley Camp Mine Plan Area is shown on the Operations Map, Map C, Volume IV. Approximate dates of construction of structures are shown on Figure 3-3.

All buildings meet Utah building code requirements and are currently in good condition. Sewage disposal and waste discharges are handled in compliance with state and federal regulations (See Volume I, Figure 1-7, Other Permits and Licenses). Storage of petroleum products is in compliance with a Spill Prevention Control and Countermeasure Plan (SPCC). Appropriate sediment control measures have been implemented to minimize contributions to runoff outside the Mine Plan Area.

The underground development waste, designed as a valley fill, is an existing structure and is addressed specifically in Section 784.19 Underground Development Waste. Existing structures addressed in this section will be sedimentation ponds and below ground structures.

There are four sedimentation ponds on the Valley Camp, Inc., Permit Area. All are located on the Mine Operations Plan Maps C-3 and C-4, Volume IV, and are numbered and named for reference.

The three ponds near the preparation plant, North Pond #1, Middle Pond #2, and South Pond #3, are similar in design. The cross sections and designs shown in Figure 3-4 are typical for the three ponds. The Belina Pond #4 cross section is shown in Figure 3-5.

All structures comply with performance standards of Subchapter K. Because the sedimentation ponds are relatively new, sampling information is limited.

The design of sedimentation ponds is a three step process, which includes gathering hydrologic data, designing pond configuration, and outlining construction requirements. For a typical design the following steps were followed.

Hydrologic analyses were made to calculate the runoff volume from the distrubed area that would be treated in the sediment pond. The calculated storage volume was based on the 10-year 24-hour storm as required by OSM Regulations. Previous experience has indicated that a 48-hour detention time is required to insure adequate settling.

Hydrographs for the Belina Mine Area were obtained from a report to Valley Camp from Vaughn Hansen Associates (Hansen, 1978, Hansen, 1980). The Hydrograph presented in the report

was for a-25-year 24-hour storm. The Hydrograph for the 10-year 24-hour storm is assumed to be of similar shape. The peak inflow into the pond was calculated assuming the hydrograph could be represented by a triangle. The peak runoff for the 10-year 24-hour hydrography, is determined according to the equation:

$$qp = \frac{484\ AQ}{Tp}$$

where:

qp = Peak Runoff, cfs

A = Area, sq. miles

Q = Net storm rain, inches

Tp = Time to peak runoff, hours.

The volume of runoff is then defined as the area under the hydrograph.

The outflow hydrograph of the sediment pond for the design storm was constructed based on a constant outflow from the principal spillway. Since the outflow from the sediment pond will be constant and the detention time has been specified as 48 hours, a direct determination of the outflow hydrograph for this design storm is possible. The constant outflow can be determined from the equations:

$$Vi = Vo$$

$$Vi = qo \times tb$$

where,

Vi = Volume Inflow

Vo = Volume Outflow

qo = Constant Outflow Rate, cfs

tb = Duration of hydrograph, hours

For the Belina mine area pond, pond 4, the constant outflow required for design storm and a 48 hour detention time is 0.94 cfs.

The storage required for the 10-year 24-hour storm can be determined from the inflow and outflow hydrographs. The difference between the area under the inflow hydrograph and that under the outflow hydrograph during the time of inflow is the storage volume. The pond must be of sufficient volume to hold both the accumulated sediment and the design storm runoff.

Estimates of the volume of sediment were made from the 0.1 acre-feet per acre of disturbed land value recommended by the OSM Regulations. The total volume required for the storage pond would be the water volume plus the sediment volume.

In accordance with the regulations, the accumulated sediment must be removed when it reaches 60% of maximum. It should be noted that, with the fixed decant system, it may be necessary to dewater the pond by pumping after some precipitation events in order to provide storm surcharge capacity or by using a dewatering device (See Figure 3-4).

The emergency spillway was designed to handle the OSM Regulation's design storm of 25-years 24-hours. OSM regulations require at last 1.0 feet of clearance between the maximum elevation of water in the emergency spillway and the crest of the embankment. The spillways were designed to handle the flow rates of a 25-year 24-hour storm (2.92 inches) and still satisfy the freeboard requirements.

Sediment ponds must be periodically maintained to remove deposited sediments so that storage volume can be preserved. The Federal Regulation require that this occur when the design sediment storage volume has been 60 percent displaced.

Since the required volume is 3 years of sediment or 0.1 acre-feet per acre of disturbed land, the maintenance schedule will then require cleaning the pond at least every

21 months (60 percent of 3 years). However, this may be reduced to a maximum of every 12 to 18 months because the sediment will not be deposited evenly over the 3 year period (Skelly and Loy, 1979). Cleaning will be done with a Backhoe and the sediment will be hauled away from the drainage area and placed in a landfill.

A thorough inspection of the sediment pond and embankment will be undertaken at least once per year. When examining for stability and performing a general inspection, the inspector will be looking for any of the following conditions:

- Seepage from anywhere on the down-stream side of the embankment but especially around the discharge pipe
- Erosion of embankment slopes
- Continuity of emergency spillway
- Erosion around entrance or exit of discharge pipe
- Clogged principal or emergency spillway
- Check slope stakes for obvious slope movement (if utilized)
- Level of sediment
- Placement of wave erosion protection (if utilized)
- Erosion at spillway discharges
- Clogging of dewatering device.

Monitoring for embankment movement (Skelly and Loy, 1979) will also be a part of this inspection where applicable. This will be performed by setting stakes in the embankment, along the toe and several rows proceeding up from the toe. The original position and elevation will be recorded with reference to a permanent landmark. These positions will be checked during inspection. If unstable or potentially unstable conditions exist, corrective measures will be taken immediately.

The below ground structures are the reclaim tunnel for the clean coal loadout facility, and the Utah #2 portals. The reclaim tunnel cross section is shown in Figure 3-6. Reclamation of all structures addressed in this section is covered in detail in the following reclamation plan Section 784.13.

The Utah #2 mine is sealed as shown in Figure 3-6 at approximately 700' underground. Ventilation is maintained in the open mine area to prevent gas buildup. At the closing of the mine, the portals will be sealed and the area reclaimed as described in Section 784.13.

Figure 3-3

Existing Structures Construction Dates
Valley Camp of Utah, Inc.

Structure	Begin Construction	End Construction
Utah #2 Portal facilities 1974	2nd Quarter 1974	2nd Quarter
Unit Train loadout facilities and plant 1975	2nd Quarter 1975	4th Quarter
Truck Dump 1979	3rd Quarter 1978	1st Quarter
Office/Warehouse	4th Quarter 1975	1st Quarter 1976
Office/Bath house Utah #2 (Mobil trailers)	1974	1974
Utah #2 Shop	1974	1974
Belina #1 Portal Facilities	3rd Quarter 1976	4th Quarter 1976
Belina #2 Portal Facilities	2nd Quarter 1980	Under construction
Belina Bath house	1st Quarter 1980	3rd Quarter 1980
Sewage Treatment plant, Belina Mines	2nd Quarter 1980	3rd Quarter 1980
Mine Development Waste Disposal	2nd Quarter 1976	4th Quarter 1976
Mine access/Haul Road	2nd Quarter 1976	4th Quarter 1976

Figure 3-3
(continued)

Structure	Begin Construction	End Construction
Belina Shop and Warehouse	3rd Quarter 1976	4th Quarter 1976
Belina Loadout Facility	3rd Quarter 1980	Under Construction
Pond #1 North Pond	2nd Quarter 1979	3rd Quarter 1979
Pond #2 Middle Pond	1st Quarter 1980	1st Quarter 1980
Pond #3 South Pond	2nd Quarter 1980	4th Quarter 1980
Pond #4 Belina Pond	3rd Quarter 1979	4th Quarter 1979
Belina Mine Discharge Filter Pond	2nd Quarter 1977	3rd Quarter 1977

Figure 3-4

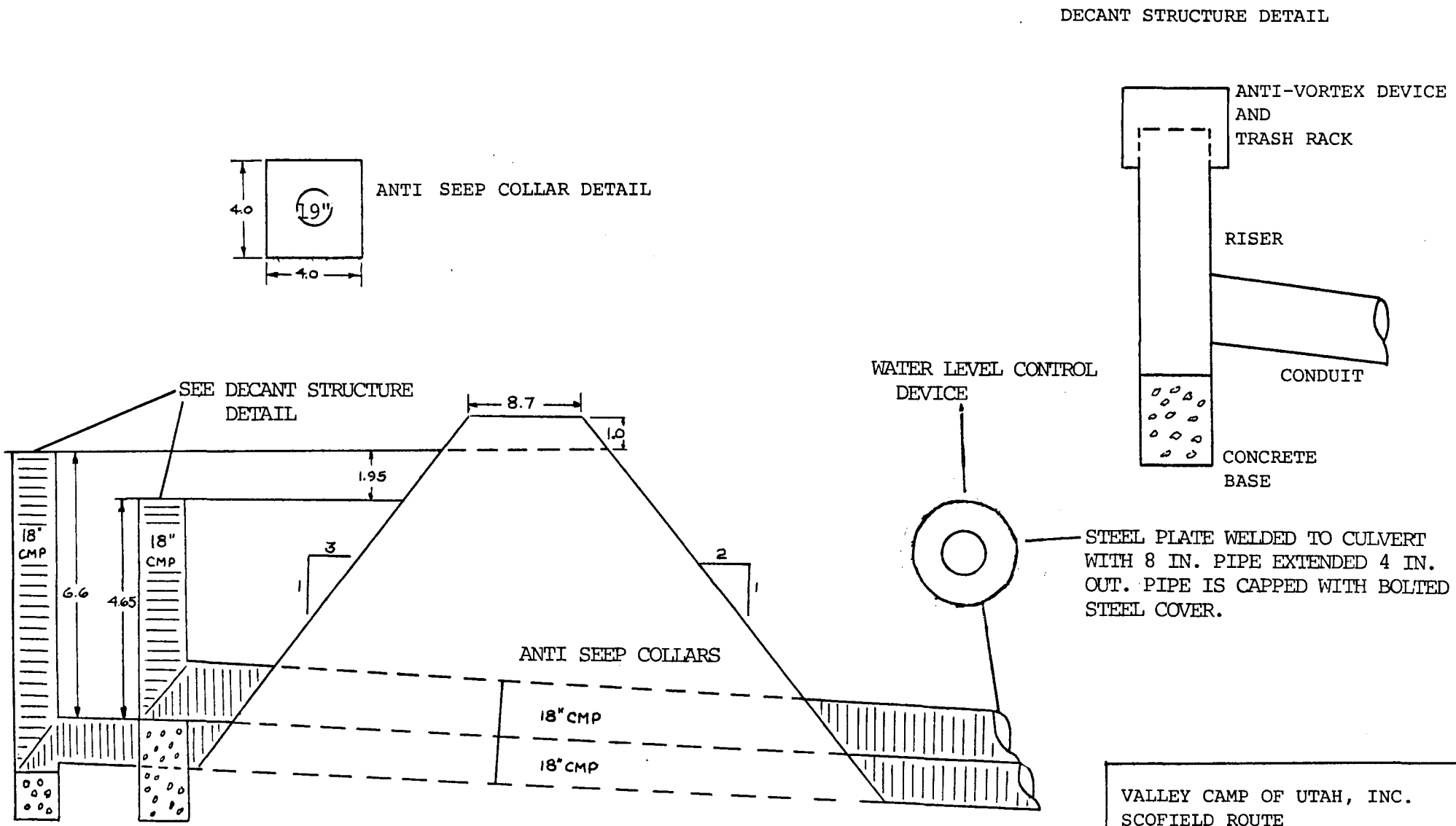

DAM CROSS SECTION (NOT TO SCALE)

PLACED IN 6-8 INCH COMPACTED LIFTS

VALLEY CAMP OF UTAH, INC.
SCOFIELD ROUTE
HELPER, UTAH 84526

LOADOUT FACILITIES AREA
SEDIMENTATION PONDS

HYDROLOGIC DATA

Design Storm - 25 year 24 hour
Precipitation Amount - 2.92 inches
Drainage Area - 36 acres
Detention Time - 48 hours
Runoff Volume - 6.7 acre-feet

Figure 3-5

IMPOUNDMENT DATA

Sediment Volume - 3.6 acre-feet
Surface Area at Normal Pool - 1.0 acre
Volume at Normal Pool - 11.2 acre-feet
Maximum depth at normal Pool - 16.0 feet

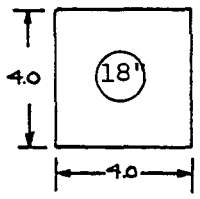

ANTI SEEP COLLAR DETAIL

EMERGENCY SPILLWAY DETAIL

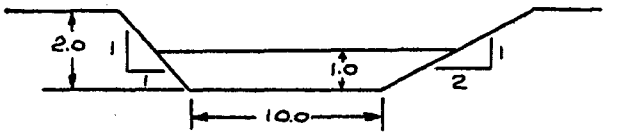

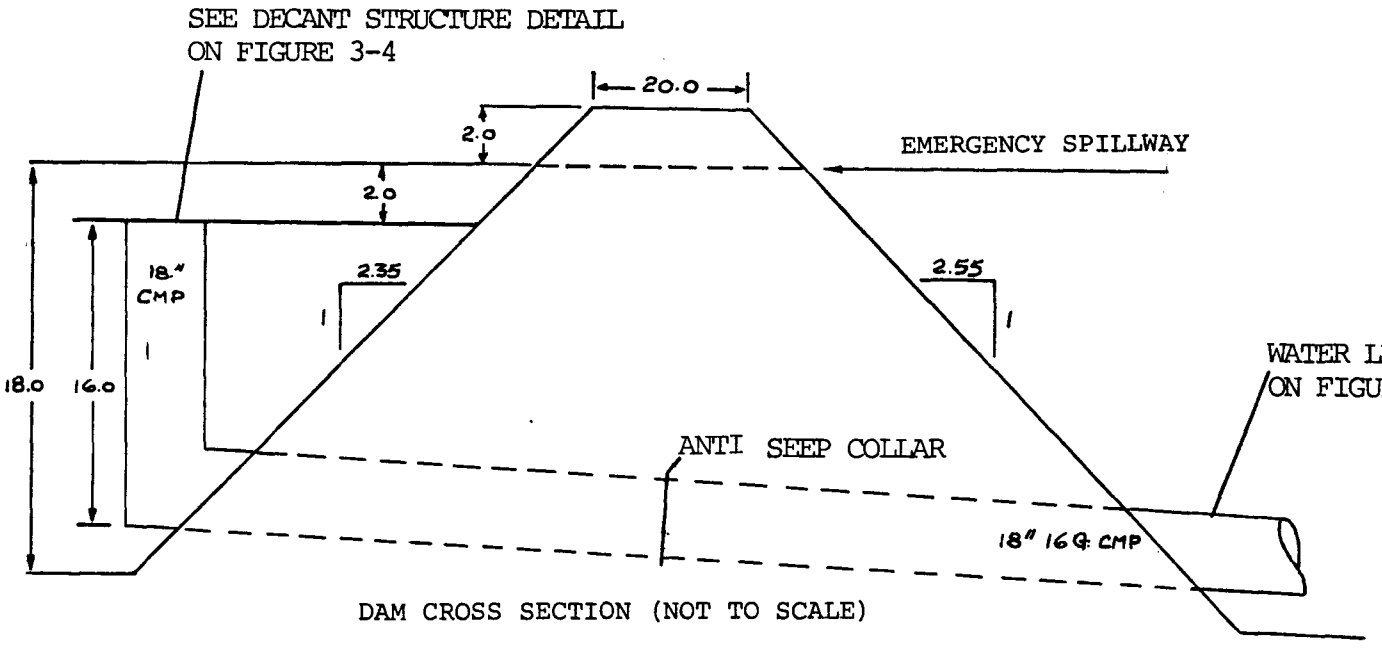

DAM CROSS SECTION (NOT TO SCALE)

VALLEY CAMP OF UTAH, INC.
SCOFIELD ROUTE
HELPER, UTAH 84526

POND AT BELINA
MINES SITE

Figure 3-6

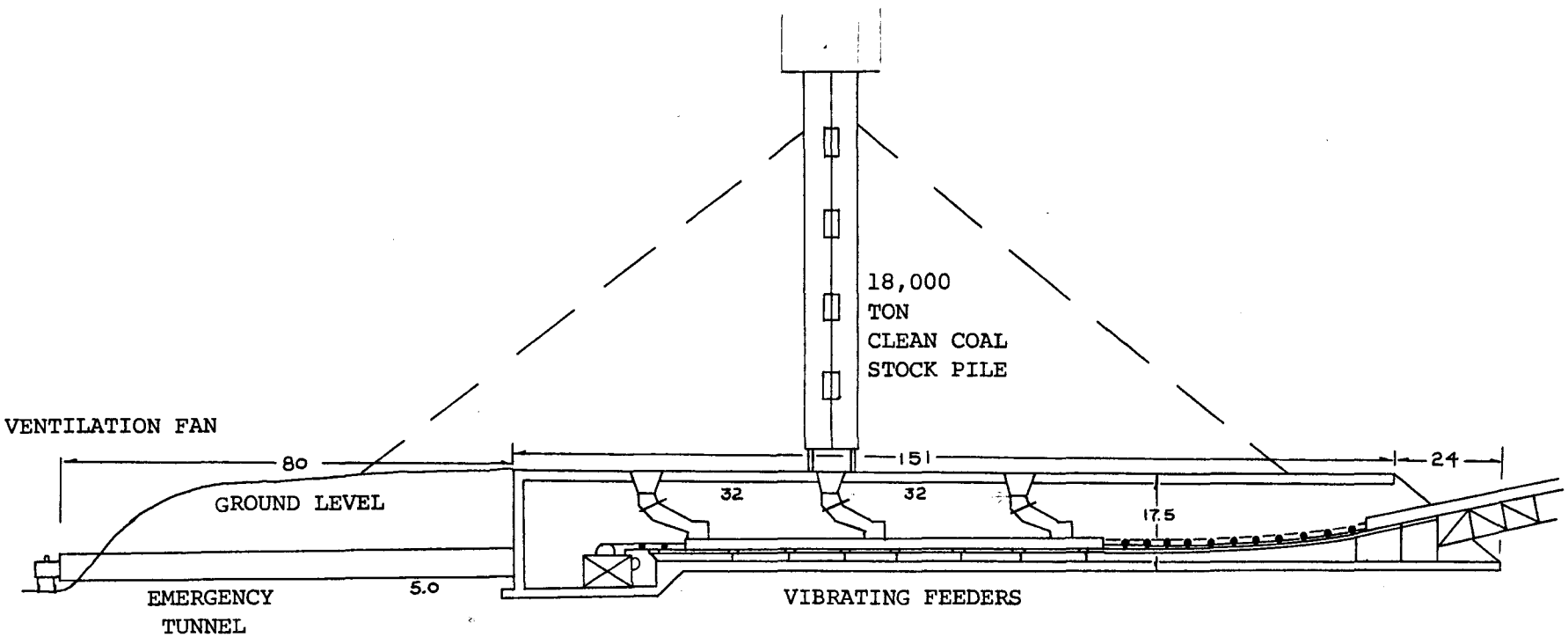

VALLEY CAMP OF UTAH, INC.
SCOFIELD ROUTE
HELPER, UTAH 84526

CONCRETE RECLAIM TUNNEL
CROSS SECTION

THOMSEN ENG • MC703

Figure 3-7

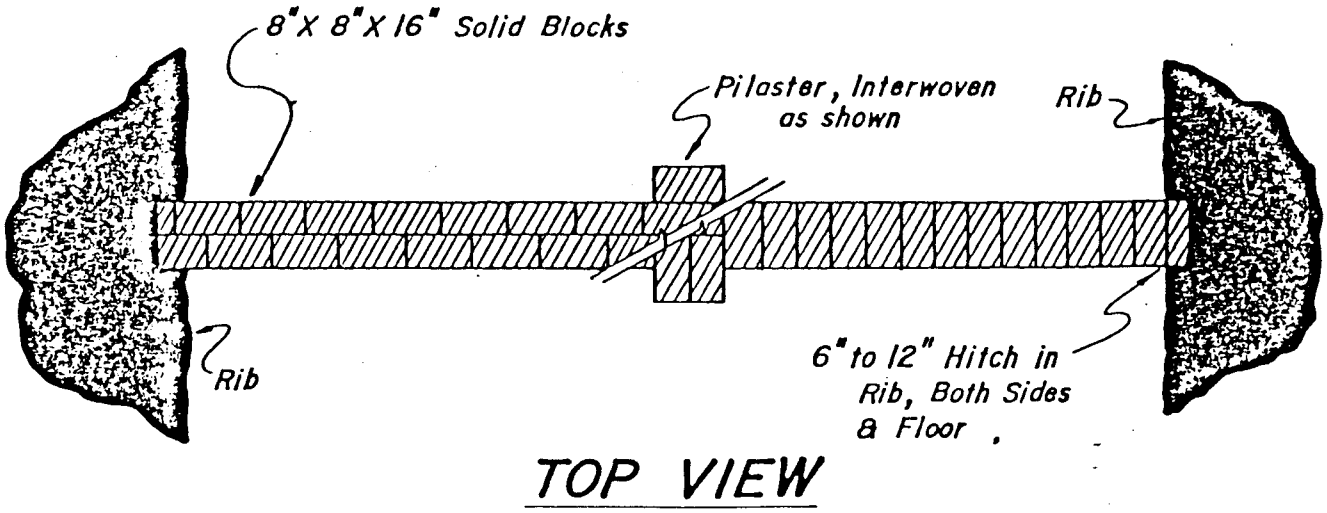

TOP VIEW

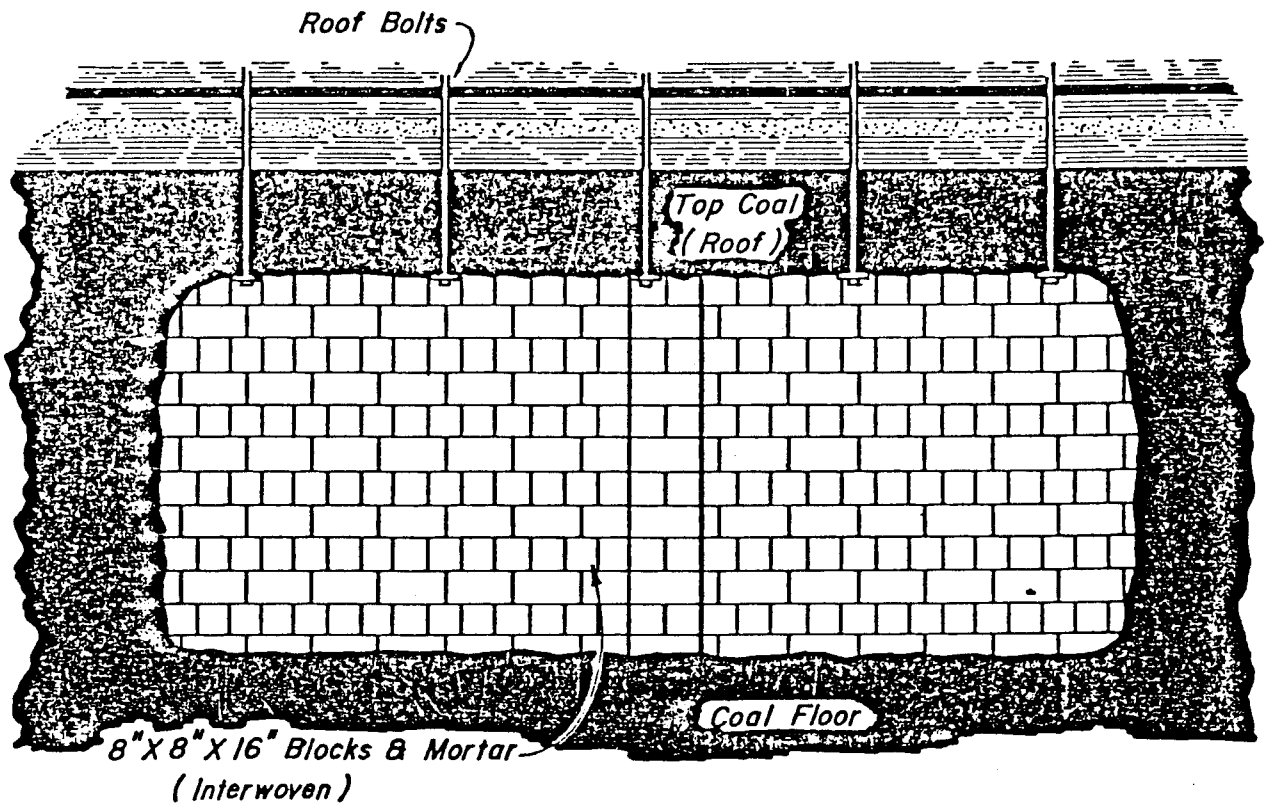

FRONT VIEW

Solid Concrete Block Seal

Scale: 1/4" = 1"

784.13 RECLAMATION PLAN: GENERAL REQUIREMENTS

The reclamation plan at Valley Camp, Inc. is divided into three major sections; the portal area at the Belina Mines, the plant and load out area, at the Utah #2 area and the general office-shop area. The time table for completion is shown on Figure 3-8. Time zero is the beginning of reclamation, which will be upon completion of mining activity.

The estimate of cost for each phase is also shown on Figure 3-8. Supporting calculations detail the estimates and are shown in Appendix A.

Estimated reclamation cost for the proposed overland conveyor system is not included in the detailed reclamation calculations found in Appendix A, since the system has not yet been designed and actual location not determined. At such time when the installation of such a system becomes a reality, the applicant will revise the Reclamation Plan to provide for the reclamation of the system and re-bond accordingly.

The Belina Mine portals area. Reclamation of this area will be started first, as shown in Figure 3-8. The graded slopes in the portal area have been designed within the guidelines of geotechnical engineering practices (Golder, 1980) and have been stabilized. To minimize additional impact on the environment, those slopes will be left intact in the final reclamation plan.

Figure 3-8
(Revised)

January 13, 1987

Area \ Time-Weeks	1	2	3	4	5	6	7	8	9	10	11	12	13	14	15	16
Belina Mines Portals	Remove all buildings and structures Load-out & haul $135,876								Belina #1 Grading $18,228		Coal Storage Areas $6,452		Belina #2 Grading $14,810		Topsoil $69,010	Revegetation and Mulching $44,044
					Seal all entries $26,658											
Utah #2 Load-out and preparation plant	Seal all entries $12,101		(Including conveyor system) Remove all buildings and structures $87,068 Remove parking areas and roads Load and haul								$19,663	Load-out Grading $9,541			Topsoil $36,800	$18,173
General Office and Warehouse	Remove buildings, structures and roads $15,746				Grading $1,862										Topsoil $4,163	$4,163

Estimated Cost of Final Reclamation	$524,358
Plus Contingency (10%)	52,436
Plus Profit and Administration (13%)	68,167
Plus Mobilization (In and Out) (10%)	52,436
Belina Haul (See Exhibit 1)	205,563
TOTAL BOND:	$902,960

Timetable for reclamation activity
Valley Camp of Utah, Inc.

The areas where coal has been stacked or handled will be cleaned as much as possible by end loaders and any recoverable coal will be transported to the preparation plant. The remaining material, estimated to be approximately one foot thick, will be scraped up by dozers then loaded into haul trucks. This material will be dumped out by the barrier seals in the mine portals and in by the portal entrance. When disposal is complete, a second seal will be constructed out by the material. In this manner the material will be buried and sealed from contact with air and water.

The Belina #1 portal entrance areas will then be graded to a 30 percent slope, stabilized, and covered with topsoil. The Belina #2 portal entrance areas will be graded to approximately 16 percent, stabilized and covered with topsoil. This is shown on plan and cross section Maps D-1 and D-2, Volume IV.

All buildings will be torn down and removed. The roads, parking areas, and all other areas not regraded will be scarified, fertilized, and covered with topsoil.

The entire area will then be reseeded with the recommended reseeding mixtures as shown in Appendix B.

Whenever possible initial revegetation attempts will be conducted in the season of disturbance, consistent with successful establishment of plantings - i.e. mainly during spring, summer, or early fall. In steep areas planting will follow immediately as the area becomes available during construction activities.

Native species are primarily proposed for revegetation because of OSM stipulations, and because of availability of stock. See Appendix B. Most species proposed for revegetation are native to the general area. The species are compatible to useage by domestic livestock and by wildlife in the region. Diversity of species will provide cover, nesting opportunity, and post-mining use by livestock and wildlife.

Seeds, seedlings, and cuttings of the native species listed herein are available from Native Plants, Inc., 360 Wakara Way, Salt Lake City, Utah.

Recommended revegetation practices for the mine plan area are as follows.

Tillage practices on level ground and on slopes flatter than 10h:1v include leveling, disking, and harrowing. Slopes of 10h:1v up to 3h:1v will be mulched using straw or other

inert organic material. Slopes steeper than 3h:1v will require a hydro-mulch and/or pinned hemp matting and will be treated to basin listing.

Plantings on slopes less than 10h:1v will be accomplished by drilling of seed with a mechanical drill. Slopes between 10h:1v and 1.5h:1v will be seeded by hand broadcast and buried by raking or other acceptable methods. Mulch will be applied over the hand broadcast seed. It is elected to revegetate areas with slopes greater than 1.5h:1v (15%-33°) without topsoil; such areas will be treated to handset plantings in basins filled with topsoil and with hydro-mulch seeding in between. Where the substrate consists of outcroppings of stone, no attempt will be made to revegetate. Hydroseeding may be substituted for the above methods of seeding where practical. In specific cases, other methods of revegetations may be suitable and may be used, if approved.

Nitrate nitrogen is low in quantity for soil types in the mine plan area. The most important fertilizer to add is nitrogen (Welsh, 1980). Soil tests will be taken in areas to be revegetated and fertilizer added, as required.

Success of revegetation and stabilization of road and conveyor belt slopes will be evaluated during the middle of each growing season, when cover and composition studies are most feasible. Erosion pins will be placed on slopes at the time of reseeding operations; a table of random numbers will be used to determine location. Statistically acceptable techniques will be used in determining percent cover and composition of disturbed area. Pins and revegetation analyses will be conducted annually for at least the first five years. Where success is apparent, as represented by achievement of 80% of the original cover during the five-year period, subsequent analyses will be at five year intervals. Any areas not achieving 80% of the original cover in the first five years should be re-evaluated and another attempt made to successfully vegetate those areas.

Inasmuch as construction had begun at the portal area prior to initiation of contemporary OSM regulations, no attempt was made to determine the volume of topsoil available for storage from the portal and load out areas.

The majority of the topsoil, at the mine portal sites, was removed prior to the creation of topsoiling requirements. A limited amount, however, was later removed around the Belina Complex and stored in a stockpile near the portal site (see location on Operation Map, Map C, Volume IV). If the stockpiled topsoil is to be stored for longer than one year, the material will be stabilized with seed and erosion control measures implemented, which will protect the pile

from environmental degradation. Redistribution will be with shovels, trucks, front-end loaders and dozers, as required.

The sedimentation pond located below the portal site, sediment pond #4, will remain until the entire portal area is stabilized with vegetative cover. When the area will not contribute high sediment load to the streams, the pond will be removed. This will be accomplished by draining the water by cutting down a section of the dam. Once the sediment in the pond has dried, the dam will be graded over the sediment and the area reseeded.

The emergency spillway will remain intact to receive drainage from the surface. This will prevent any erosion of the downslope of the dam. Surface drainage from the portal area will also be routed down the spillway to prevent any unnecessary erosion.

The private road from Eccles Canyon to the mine site will be left. The surface will be stabilized by compaction. This will allow access to the reclaimed area for camping, recreation, or whatever alternative use the surface land owner may desire.

<u>The loadout facilities and preparation plant area.</u> (Including the proposed conveyor system) The Utah #2 area

will be reclaimed in a manner similar to the portal area reclamation. A minimum of regrading will be done to minimize additional impact on the environment. The grading for this area can be seen in plan and cross section on the Reclamation Maps, Maps D-3, D-4, and D-5, Volume IV). The portals will be sealed as described previously and shown in Figure 3-9.

The areas where coal has been stored or handled will be cleaned as much as possible by end loaders, and all recoverable coal will be shipped out. The remaining material will be scraped up by dozers and hauled to the concrete reclaim tunnel under the clean coal stockpile or into mine portals. When the reclaim tunnel is full, the end and top openings will then be sealed with concrete. In this manner, the material will be buried and sealed from contact with air and water.

As shown on the cross sections with the Reclamation Map, Map D, Volume IV, the regrading around the existing clean coal stockpile will be north and south. Approximately five to seven feet of material will be dozed north and south to grade down the material around the stockpile.

All buildings and structures including the proposed conveyor system will be torn down and removed. All Utah #2 areas will then be scarified, fertilized, and planted with the

recommended reseeding mixtures in Appendix B. The procedures used in the revegetation process will parallel those described for the Belina Portal area. Minimal grading will be done along the conveyor route to minimize impact on the environment. The conveyor route area will then be fertilized and reseeded with recommended seeding mixtures.

Two roads will be left at the Utah #2 site to provide access to the railroad. These are shown on the Post Mining Land Use Map, Map J, Volume IV, and on the Reclamation Map. The surface material from remaining roads and parking areas will be picked up and placed in the reclaim tunnel or mine portals.

Proposed access roads to the conveyor system transfer points will be scarified, fertilized and reseeded.

The sedimentation ponds will remain intact until the final reclamation is completed and the area is fully stabilized. Removal of the ponds will be completed by cutting a notch in the dam to drain the water, then dozing the dam material over the sediment. The down slope side of the dam will remain and will be stabilized to provide a low energy exit into Pleasant Valley Creek for drainage from the area.

The general office-warehouse area. This area has potential value as a campsite, or recreational area. Valley Camp would, therefore, first propose to leave the buildings, parking lot, entrance road, etc., in the office-warehouse area intact and dispose of the entire complex for use as a recreation site or other usage. By disposing of this complex intact, there would be less environmental impact on the area (i.e. no dismantling of buildings or re-grading activities), and at the same time, would enhance the value of the area.

In the event the above proposed approach for such land use change was to be deemed unacceptable, or impossible to market for such usage, the applicant's alternate approach would be to return the area to its premining land use. The first approach is the one used in compiling final reclamation costs in Section UMC 784.13.

The average annual rainfall in the Valley Camp, Inc., Mine Plan Area is less than 26 inches per year. (Refer to the Climatological Information, Section 783.18, Volume II). Therefore, the period of extended responsibility for vegetative cover will equal the approved standard for the last two consecutive years of the responsibility period (OSM Regulations, Section 817.116). The determination of success of re-vegetation will be measured by the techniques described earlier if approved by the regulatory authority. The vegetative reference area has been established and is shown on the Vegetation Map, Map G, Volume IV.

The coal resource in the Valley Camp, Inc. Mine Plan Area is two mineable coal seams, The Upper O'Connor and the Lower O'Connor. The McKinnon seam's mineability is questionable in this area. In accordance with the requirements of Public Law 95-87 and Utah State Law, all three seams will be mined where possible, starting with the uppermost seam and ending with the lowermost seam. In all other areas of the mine plan, coal recovery will be maximized, limited only by safety laws and other state and federal laws. See Coal Maps B-2 and B-3, Volume IV.

Disposal of all toxic or acid-producing material is described in the grading plan. Material around the load-out area will be sealed in the underground reclaim tunnel, which has a storage volume of 1300 yards of material, sufficient volume to bury all acid or toxic-producing material around the load-out and preparation area. If additional storage is required, the mine portals will be used for disposal areas.

Any toxic or acid-producing material will be contained within areas which will not allow airflow through the material. Therefore, the contingency plan to preclude the sustained combustion of the material is to seal the material in air and water tight areas.

The measures for sealing the mine entries are by use of a barrier seal. The plans for these seals are shown and described in Figure 3-9. Exploration holes, wells and other openings in the

mine plan area will be sealed with concrete in a conventional manner.

During the mining operation, measures taken to comply with the requirements of the Clean Air Act are described in Section 784.26, Air Pollution Control Plan. During mining operations, measures taken to comply with the Clean Water Act are described in Hydrology Sections 783.15, 783.16 and 784.14.

During reclamation, the roads used for material haulage will be treated and retreated as necessary with a dust suppressive material to prevent excessive dust. Sedimentation ponds will remain intact until the final reclamation is completed and the area fully stabilized.

Figure 3-9

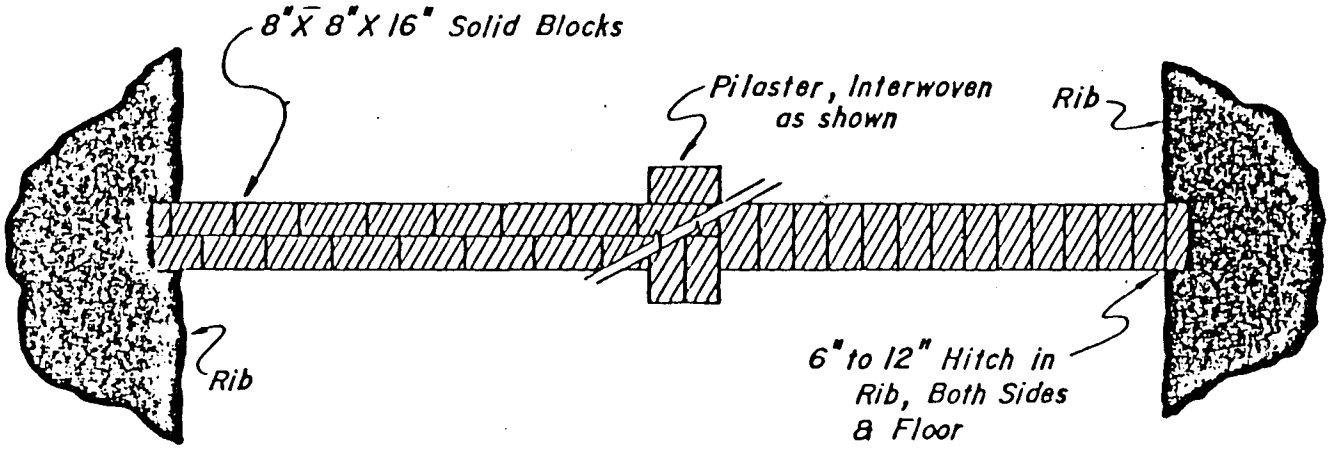

TOP VIEW

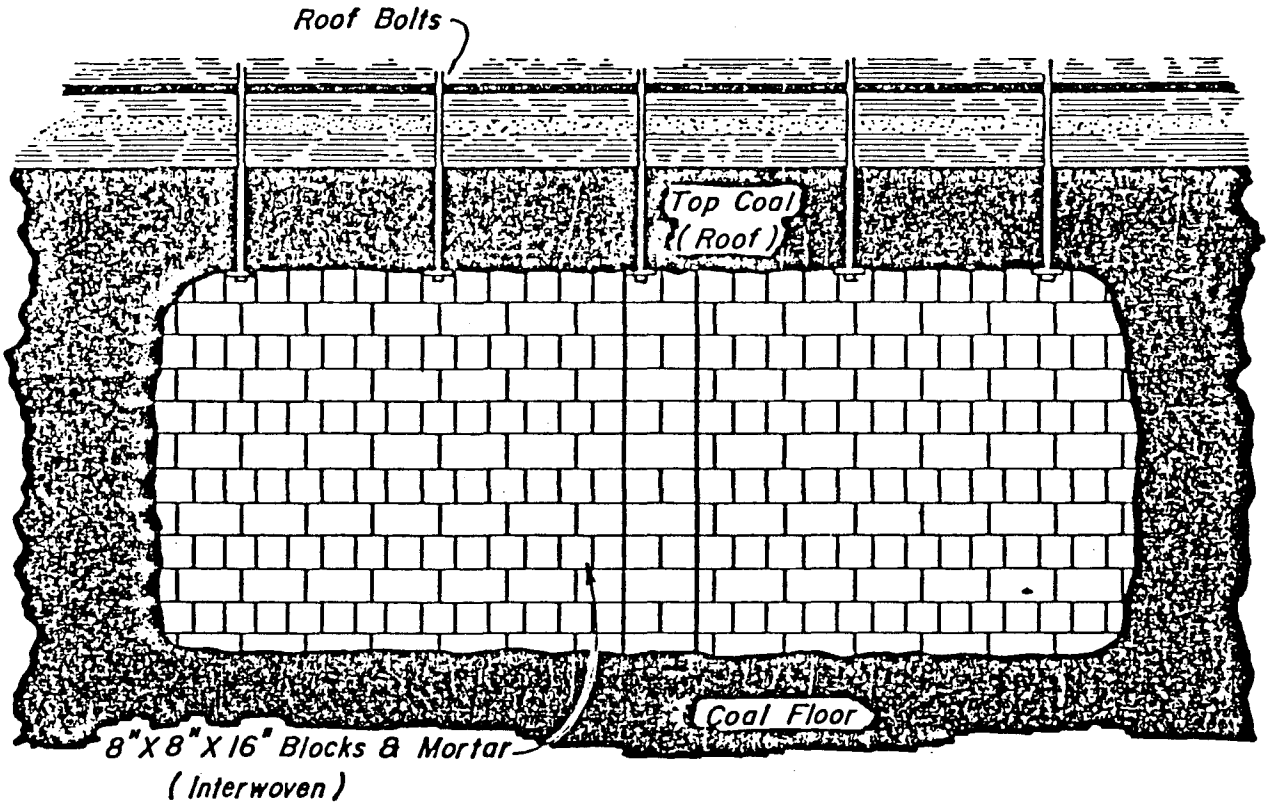

FRONT VIEW

Solid Concrete Block Seal

Scale: 1/4" = 1'

ESTIMATED RECLAMATION COST
(1987 DOLLARS)

Belina Mines Area

A.	Portal Reclamation		$26,658.00
	No. 1 Mine - 5 Portals, each 12' x 20'		
	Backfilling = 120 yds. ea. @ $3.83 per yd.	$ 2,298.00	
	Sealing = 6,000 blocks @ $.99 ea.	5,940.00	
	Man Days = 60 @ $109.54 per day	6,572.00	
	Subtotal	$14,810.00	
	No. 2 Mine - 4 Portals, each 12' x 20'		
	Backfilling = 120 yds. ea. @ $3.83 per yd.	$ 1,838.00	
	Sealing = 4,800 blocks @ $.99 ea.	4,752.00	
	Man Days = 48 @ $109.54 per day	5,258.00	
	Subtotal	$11,848.00	
B.	Concrete Structure Removal Cost		$ 7,494.00
	Belina No. 1 Fanhouse 20' x 50' x 14'		
	Belina No. 2 Fanhouse 20' x 50' x 14'		
	Pumphouse 20' x 20' x 10'		
	Bathhouse 80' x 160' x 15'		
	Sewer Building 30' x 50' x 15'		
	No. 2 MCC Building 20' x 20' x 4'		
	Shop Building 40' x 40'		
	Substation Pads 2@ 30' x 30'		
	Coal Transfer Building 20' x 20' x 4'		
	Portals 9 @ 20 yds. each		
	Misc. concrete 50 yds.		
	Total yardage of flat material 909 cu. yds. @ $4.93 per	$ 4,481.00	
	Total yardage of wall material 688 cu. yds. @ $4.38 per	3,013.00	
	Total Cost of Concrete Structure Removal	$ 7,494.00	
C.	Steel Building Removal Cost		$33,410.00
	Belina Shop 40' x 40' x 25'	$ 6,572.00	
	Coal Transfer Building 20' x 20' x 50'	3,286.00	
	Truck Load-out Bin	5,258.00	
	No. 2 MCC Building 20' x 20' x 30'	4,382.00	
	Bathhouse (roof) 80' x 160'	8,216.00	
	Stacking Silo	5,696.00	
D.	Conveyor Structure Removal Cost		$24,099.00
	Steel Structure	$13,145.00	
	Conveyor Foundations	2,191.00	
	Transportation	8,763.00	

E. Miscellaneous Cost		$70,873.00
Equipment Removal	$32,862.00	
Drainage Pipe Removal	1,643.00	
Tank Removal	8,763.00	
Power Line Removal	5,477.00	
Guardrail Removal	2,739.00	
Substation Removal	10,954.00	
Water Line Removal	3,286.00	
Load-out Tunnel Fan	219.00	
General Refuse Removal	4,382.00	
Mine Fan (2 @ $274.00)	548.00	
F. Parking Areas and Roads Cost		$ 2,191.00
Scarifying	$ 2,191.00	
Removal Abandonment (A-F) Subtotal	$164,725.00	

G. Grading $39,490.00

1. Belina No. 1 $18,220.00
   12,200 yards to move
   500 foot push/haul distance - 2 dozers, 2 loaders
   153 yards per operating hour
   80 total operating hours for dozers, @ $131.45/hr. with operator
   80 total operating hours for loaders, @ $96.40/hr. with operator

   Belina No. 2 $14,810.00
   8,600 yards to move
   500 foot push/haul distance - 2 dozers, 2 loaders
   132 yards per operating hour
   65 total operating hours for dozers, @ $131.45/hr. with operator
   65 total operating hours for loaders, @ $96.40/hr. with operator

2. Coal Storage Areas $ 3,987.00
   a. Portal Area
      860 yards to move @ 1.2 tons/yd., 28% swell
      600 foot push/haul distance - 2 trucks, 1 loader, 2 dozers
      16.0 total operating hours for trucks @ $71.20 per hour with operator
      8.0 total operating hours for loader @ $93.11 per hour with operator
      16.0 total operating hours for dozers @ $131.45 per hour with operator

   b. Truck Bin & Clean Coal Stockpile $ 2,465.00
      800 yards to move @ 1.2 tons/yd., 28% swell
      300 foot push/haul distance - 2 trucks, 1 loader, 2 dozers

12.0 total operating hours for trucks @ $71.20 per hour with operator
6.0 total operating hours for loader @ $93.11 per hour with operator
8.0 total operating hours for dozer @ $131.45 per hour with operator

H. Revegetation Cost $41,853.00

1. Handseeding	AC.	Unit/Cost	Item Cost
Flat/slight slope areas	4.0	$112.83	$ 451.00
North Facing slopes	3.0	$123.78	$ 371.00
plus 1,100 shrubs & trees		$ 0.822	$ 904.00
South Facing slopes	3.0	$118.30	$ 355.00
Riparian areas	2.0	$118.30	$ 237.00
plus 500 shrubs & trees		$ 0.822	$ 411.00
	12.0 AC		$ 2,729.00

2. Hydroseeding			
Flat/slight slope areas	8.9	$766.78	$ 6,824.00
North Facing slopes	14.0	$766.78	$10,735.00
South Facing slopes	13.0	$766.78	$ 9,968.00
Steep roadcuts	3.0	$766.78	$ 2,300.00
plus 250 shrubs & trees		$ 0.822	$ 205.00
	38.9AC		$30,032.00

3. Total Mulching Cost $5,477.00
12.5 acres @ $438.16

4. Total Labor Cost $3,615.00
33 man days @$109.54/man day

I. Additional costs may be encountered for additional fertilizer and moisture retention components. Such costs should be covered under the estimated contingency provided.

J. Topsoil Cost $69,010.00
30 acres @ $2,300.00/AC

K. Total Reclamation Cost - Belina Mines Area

Estimated	$315,078.00
10% Contingency	31,508.00
Total Estimate	$346,586.00

Utah No. 2 - Load-out Area

A.	Portals		$12,101.00
	7 portals @ 10' x 18' ea.		
	Backfilling = 100 yds. ea. @ $3.83 per yd.	$ 2,681.00	
	Sealing = 4,536 blocks @ $.99 per	4,491.00	
	Man Days = 45 @ $109.54/day	4,929.00	
		$12,101.00	
B.	Concrete Structure Removal Cost		$ 3,295.00
	Fanhouse 20' x 30' x 12'		
	Storage Shed 14' x 30'		
	Crusher Building 44' x 20' x 2'		
	Stacking Tube 13.5' x 73'		
	Liquid Storage 20' x 20'		
	Load-out Footers		
	Substation pads 2 @ 12' x 20'		
	Shop 40' x 60'		
	MCC 8' x 10'		
	Truck Dump		
	Portals		
	Total yardage of flat material - 456 cu. yds. @ $4.93	$ 2,248.00	
	Total yardage of wall material 239 cu. yds. @ $4.38	1,047.00	
		$ 3,295.00	
C.	Steel Structure Removal Cost		$32,728.00
	Storage Shed 14' x 30' x 12'	$ 828.00	
	Shop 40' x 60' x 14'	5,521.00	
	Crusher 44' x 20' x 49'	7,085.00	
	Load-out 20' x 18' x 57'	3,372.00	
	Substation 2 @ 12' x 12' x 8'	3,533.00	
	Liquid Storage 20' x 20' x 8'	526.00	
	Truck Dump 20' x 43' x 15'	2,169.00	
	Bathouse Trailers (2)	438.00	
	Water Tank	493.00	
	Transportation	8,763.00	
D.	Conveyor Structure Removal Cost		$ 9,311.00
	Steel Structure	$ 8,763.00	
	Foundations	548.00	
E.	Parking Areas and Road Cost		$ 2,739.00
	Scarifying	$ 2,739.00	
F.	Miscellaneous		$41,734.00
	Equipment Removal	$ 6,572.00	
	Power Line Removal	3,505.00	
	Substations Removal	9,311.00	
	Tank Removal (4)	4,820.00	
	Guardrail Removal	767.00	

Water and Sewer Line Removal	1,095.00
Drainage Pipe Removal	8,763.00
Load-out Tunnel Fan	329.00
General Refuse Removal	6,572.00
Removal - Abandonment (A-F) Subtotal	$101,908.00

G. Grading Cost — $29,204.00

1. Utah No. 2 Portal Area — $ 9,541.00
   - 5,200 yds. to move @ 1.2 tons/yd., 28% swell
   - 300 foot push/haul distance - 1 dozer, 2 trucks, 1 loader
   - 52 total operating hours for trucks, @ $71.20/hour with operator
   - 26 total operating hours for loader, @ $93.11/hour with operator
   - 26 total operating hours for dozer, @ $131.45/hour with operator

2. Coal Storage Area — $19,663.00
   - 8,500 yards to move
   - 500 foot push/haul distance - 1 dozer, 1 loader, 2 trucks
   - 60 total operating hours for dozer, @ $131.45/hour with operator
   - 50 total operating hours for loader, @ $93.11/hour with operator
   - 100 total operating hours for trucks, @ $71.20/hour with operator

H. Revegetation Cost — $15,434.00

1. Handseeding	AC.	Unit/Cost	Item Cost
Flat/slight slope areas	19.3	$112.83	$ 2,178.00
North Facing slopes	1.0	$123.78	$ 124.00
plus 100 shrubs & trees		$ 0.822	$ 82.00
South Facing slopes	2.0	$118.30	$ 237.00
Riparian areas	1.5	$118.30	$ 177.00
plus 250 shrubs & trees		$ 0.822	$ 206.00
	23.8		$ 3,005.00

2. Hydroseeding			
Steep cuts/slopes	1.5	$766.78	$ 1,150.00
North Facing slopes	1.0	$766.78	$ 767.00
	2.5		$ 1,917.00

3. Total Mulching Cost — $10,512.00
   24.0 acres @ $438.00

I. Topsoil Cost — $36,800.00
   16.0 acres @ $2,300.00/AC

J. Total Reclamation Cost - Utah No. 2 Load-out Area

Estimated Cost	$183,346.00
10% Contingency	18,335.00
Total Estimate	$201,681.00

Main Office Area

Steel Building Removal Cost Office-Warehouse Building 58' x 125' x 10'		$11,912.00
Concrete Structure Removal Cost Office Warehouse Building 58' x 125'		$ 1,095.00
Road and Parking Lot Removal		$10,188.00
Regrading (1.9 acres)	$1,862.00	
Topsoiling ($2,191.00/AC)	4,163.00	
Reseeding & Fertilization ($2,191.00/AC)	4,163.00	
Miscellaneous Cost Remove Water Line Remove Sewer Line and Tank		$ 2,739.00

Total Office-Warehouse Reclamation Cost

Estimated Cost	$25,934.00
10% Contingency	2,593.00
Total Estimate	$28,527.00

SUMMARY OF ESTIMATION RECLAMATION COSTS 1987

Reclamation Bond Calculations

A.	Portal Reclamation (PAP Volume III, Appendix A)	
	1. Belina No. 1	$ 14,810.00
	2. Belina No. 2	11,848.00
	3. Utah No. 2	12,101.00
	Total Item A	$ 38,759.00
B.	Structural Removal (PAP Volume III, Appendix A)	
	1. Concrete Structures	$ 11,884.00
	2. Steel Structures	78,050.00
	3. Conveyors	33,410.00
	4. Misc. (Waterline, Sewer, Powerlines)	115,346.00
	Total Item B	$238,690.00
C.	Grading and Topsoil Application (PAP Volume III, Appendix A)	
	Cost to move and spread 76,858 cu. yds. of topsoil @ $2.35	$180,529.00
	Total Item C	$180,529.00
D.	Revegetation (Total Acres = 79.1, PAP Volume III, Appendix A)	
	Cost of preparation, handseeding, hydroseeding, mulching, trees, and shrubs, scarifyings, and labor	$ 66,380.00
	Total Item D	$ 66,380.00
	Subtotal (Items A, B, C, & D)	$524,358.00
	10% Contingency (Items A, B, C, & D)	$ 52,436.00
	13% Profit and Administration	$ 68,167.00
	10% Mobilization (In & Out)	$ 52,436.00
	Total	$697,397.00
	Haul Road (See Exhibit I)	$205,563.00
	TOTAL BOND	$902,960.00

Note: Revised to indicate 1987 dollars.

PERMANENT SEED MIXTURE
(North-East Facing Aspects)

SPECIES	PLS LBS/AC
Grasses:	
Agropyron trachycaulm - Slender wheatgrass	3.0
Bromus marginatus - Mountain brome	3.0
Poa Pratensis - Kentucky bluegrass	0.2
Agropyron Smithii - Western wheatgrass	3.0
Poa Canbyi - Canby bluegrass	0.3
	9.5
Forbs:	
Achillia millefolium - Yarrow	0.2
Penstemon strictus - 'Bandera' Rocky Mountain penstemon	0.5
Osmorhiza occidentalis - Sweet anise	1.0
Melilotus officinalis - Yellow sweetclover	2.0
Lupinus sericeus - Silky lupine	2.0
Hedysarum boreale - Northern sweetvetch	1.0
	6.7
Shrubs and trees:	
Prunus virginiana - Chokecherry	0.5
Symphoricarpos oreophilus - Mountain snow-berry	2.0
Sambucus coerulea - Blue elderberry	1.0
	3.5

HANDSETS (Plants per acre)

Abies Concolor - White fir	200
Picea englemanii - Engleman spruce	200
Picea pungens - Blue spruce	150
	550

PERMANENT SEED MIXTURE

(South-West Facing Aspects)

SPECIES	PLS LBS/AC
Grasses:	
Agropyron riparium - Streambank wheatgrass	3.0
Agropyron dasystachyum - Thickspike wheatgrass	3.0
Bromus marginatus - Mountain brome	3.0
Poa Canbyi - Canby bluegrass	0.3
Poa pratensis - Kentucky bluegrass	0.1
	9.4
Forbs:	
Achillia millefolium - Yarrow	0.2
Lupinus sericeus - Silky lupine	2.0
Melilotus officinalis - Yellow sweetclover	2.0
Penstemon strictus - 'Bandera' Rocky Mountain penstemon	0.8
	5.0
Shrubs and trees:	
Artemisia ludoviciana - Prairie Sage	0.1
Amelanchier alnifolia - Serviceberry	2.0
Artemisia tridentata vaseyana - Mountain big sagebrush	0.2
Symphoricarpos oreophilus - Mountain snowberry	2.0
Chrysothamnus nauseosus - Rubber rabbitbrush	0.4
Rosa woodsii - Woods rose	1.0
	5.7

HANDSETS (Plants per acre)

Populus tremuloides - Quaking aspen (Aspen will be placed on 5' to 6' centers in ¼ - ½ acre clumps)	400

PERMANENT SEED MIXTURE

Utah No. 2 Area

SPECIES	PLS LBS/AC
Grasses:	
Agropyron smithii - Western wheatgrass	4.0
Agropyron dasystachyum - Thickspike wheatgrass	4.0
Bromus marginatus - Mountain brome	4.0
Poa pratensis - Kentucky bluegrass	0.1
	12.1
Forbs:	
Melilotus officinalis - Yellow sweetclover	2.0
Medicago sativa - Ladak alfalfa	1.5
Penstemon strictus - 'Bandera' Rocky Mountain penstemon	0.5
	4.0
Shrubs and Trees:	
Artemisia ludoviciana - Prairie sage	0.1
Artemisia tridentata vaseyana - Mountain big sagebrush	1.0
Chrysothamnus nauseosus - Rubber rabbitbrush	0.5
Rosa Woodsii - Woods rose	1.0
	2.6

NOTE: Seed application is calculated for a broadcast application, and may be reduced if drill seeding is utilized.

Riparian areas within the permit area (1.5 ac. max.) will have the following shrubs and trees supplemented to the regular mixtures:

SPECIES:	NO./ACRE
Shrub - Mahonia repens - Creeping Oregon grape	300
Shrub - Rubus idaeus sachalinenis - American red raspberry	300
Tree - Salix rigida - Willow (cuttings)	2,000
Symphoricarpos albus - Common snowberry	300
	2,900

784.14 RECLAMATION PLAN: PROTECTION OF HYDROLOGIC BALANCE

The construction of additional surface facilities utilized in conjunction with Valley Camp mines (yard areas, access roads, conveyor systems, etc.) will result in temporary increases in the suspended sediment concentration of the adjacent stream. However, because of the regulatory requirement that sediment control be provided for all areas of surface disturbance, concentrations will be quickly normalized.

The proposed conveyor system and associated access roads from the loadout area will be constructed in such a manner as to minimize surface disturbance and impact. No heavy surface equipment will be used. The foundations for support towers will be prepared and constructed by hand using light equipment. The support towers will be prefabricated and air lifted into place. Efforts will persist during the entire construction period to affect as little surface area as possible. During construction of the transfer point facilities temporary diversion ditches and temporary reclamation ponds will be utilized to minimize increased sedimentation contribution to adjacent streams.

Mines in the coal field of the Wasatch Plateau act as interceptor drains, therefore, the ground water that is brought to the surface has a lower dissolved solids content than would have existed if the water was to continue its downward movement through shale layers, dissolving increased amounts of salt with distance (Southeastern Utah Association of Governments, 1977; Hansen, 1979). As a result, Valley Camp mines will have a slightly beneficial impact on the chemical quality of water in the region, because the small amount of water which is brought to the surface will dissolve fewer constituents in the stream channel than it would have in the shale formations (particularly the Mancos Shale below the Star Point Sandstone) which it would have encountered (Bently et al., 1978).

Because of the high alkalinity and low acidity concentrations in the area (differing normally by one or two orders of magnitude), acid drainage problems should not occur as a result of mining. This is fortified by the fact that coal in the area has a low sulphur content (U.S. Geological Survey, 1979).

Regional water quality will be enhanced by mining activities to the extent that water encountered in the mines is discharged.

Surface water rights in the area are primarily for stock-watering and irrigation. Stockwatering rights are almost entirely located directly on the streams. Irrigation rights are centered around the town of Scofield and in Flat Canyon, southwest of the center of the property. Irrigated lands consist almost entirely of pasture. Only stockwatering rights are present on the mine permit area. Groundwater rights are primarily for stockwatering and irrigation (mainly lawns and gardens). Only a limited number of wells are located in the area. Surface water rights and ground water rights are located on the Hydrology Maps F-4 and F-5, Volume IV.

Some Scofield Reservoir water rights have been exchanged for ground water in the Pleasant Valley Creek Basin. Most of the exchanges serve the industrial and domestic needs of mining companies in the area. Because the mining activities in the permit area will have minimal adverse impacts on the quality of water and quantity of water in the area, the present users rights will be protected.

The Valley Camp, Inc., mine plan area and adjacent area are covered essentially entirely by the Blackhawk Formation. This formation consists of interbedded layers of sandstone and shale separated by various mineable and non-mineable coal seams (see Figure 3-10). The sandstone beds are generally

Figure 3-10

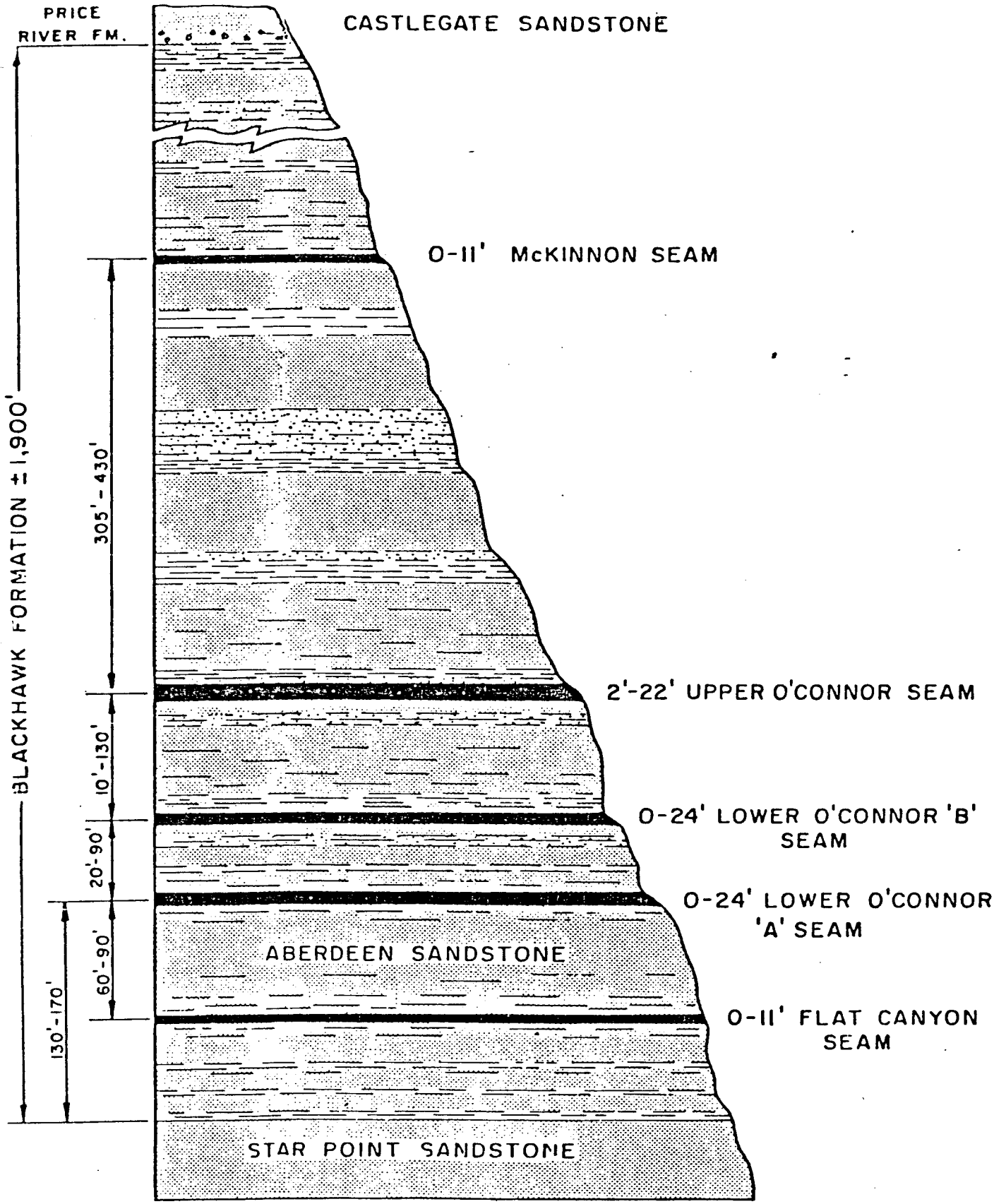

GENERALIZED COLUMNAR SECTION -
VALLEY CAMP OF UTAH, INC.
ECCLES CANYON AREA

massive while the shale layers are bentonitic, tending to swell when wet and decompose into an impervious clay. Investigations at springs and streams in the property area have indicated that the shale layers prevent downward percolation of water through the Blackhawk at a significant rate. Instead, water which reaches a sandstone finger which is connected to the ground surface rides out on a shale layer, issuing as a spring. Springs tend to receive water from localized rather than regional sources. In addition, because of the ability of the shale material to swell and decompose into an impervious clay, fractures in the Blackhawk Formation do not act as conduits but, rather, barriers to potentially vertically flowing water (Hansen, 1980).

A relatively insignificant quantity of water will likely be encountered in the mines due to the impermeable nature of the formation and its inability to yield water readily. Mines in the Wasatch Plateau coal field generally yield less than 10 gallons per minute per active face, with drifts dry approximately 500 feet up-dip from the face. Once a section dries up, leaks reappear only very occasionally in the future. This condition has been observed locally in the O'Connor and Belina No. 1 mines, (Hansen, 1979). Apparently, only a zone of saturated sandstone immediately adjacent to the mine is dewatered by the drift.

Should the mines encounter sandstone lenses at the face of a fault, the inflow rate to the mine could change rapidly for a short period of time, as noted in the Belina No. 1 Mine at the Connelville Fault. Under these conditions, inflow rates could exceed 200 gallons per minute for a short period, decreasing rapidly to a more normal rate (10 to 15 gallons per minute).

Most of the water encountered in the mines will be utilized underground for dust suppression, etc. As a result, only those inflows which temporarily exceed storage and mine use requirements will be discharged to the surface. The volume of this discharged water will be insignificant and any discharge will be treated in settling ponds, which are designed to handle the flow.

Most of the water which leaves the mine mouth will be indigenous water associated with the coal. Coal from the Valley Camp permit area, tested with ASTM standard procedures, has an equilibrium water content of about eight percent. The moisture content of coal shipped from the mine is about ten percent. This means that of the total moisture of the coal to be shipped only two percent is free water. About one percent of the final moisture content comes from water used in dust suppression, and the other one percent comes from free water in the coal vein, (Hansen, 1980).

The quantity of water present in surface water sources in the area (seeps, springs, and streams) is anticipated to remain unaffected by mining in the permit area and adjacent area. The water removed by interruption of water courses from the mine, which would normally have traveled to an outlet some distance from the permit area, will be consolidated at one discharge point at the mine pursuant to NPDES permit, with probable improvement in quantity and quality availability to downstream water users.

As a result of these observations, it is concluded that mining activities in the permit area will have minimal adverse impacts on the quantity and quality of water in the area.

Although it is felt that no contamination, diminuation, or interruption of existing surface or underground sources of water will occur within the mine plan area, the following alternative means of water supply could be utilized to replace an interrupted supply of any legal owner of such rights.

1. Private contractors living within the district could be retained to haul water to specific locations from applicant owned surface sources located within Pleasant Valley.
2. The applicant has three (3) producing water wells within the mine plan area which could also supply

supplemental amounts of water for both private and industrial use.

The mine portals will be sealed with solid concrete block after the mine closure. Then covered and reseeded. Refer to Figure 3-11 for specific details of seals and downslope barriers. The coal seams dip away from the portals so there will be no gravity flow discharge from the portal.

Figure 3-11

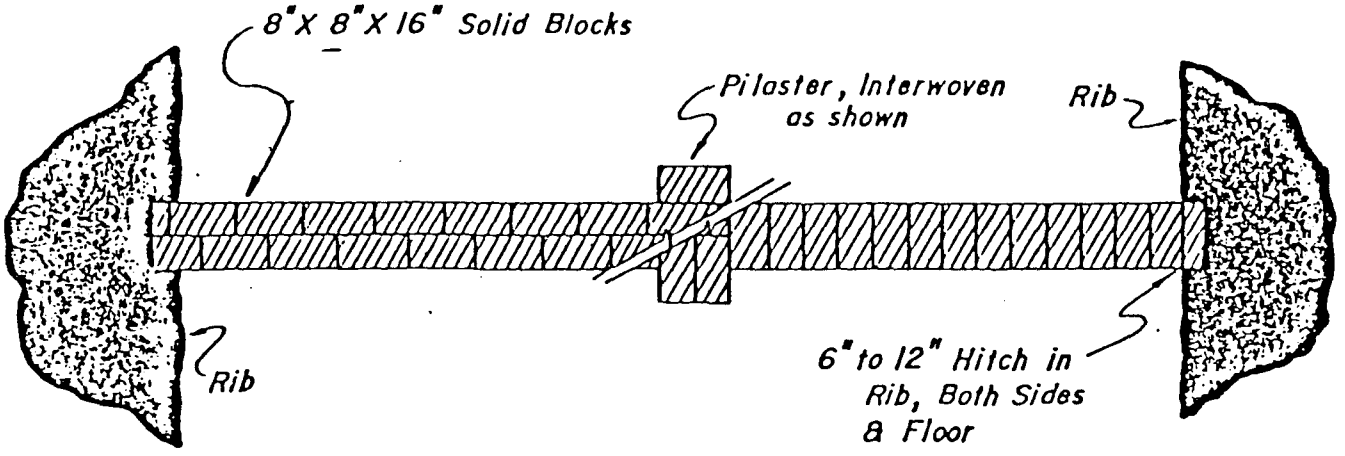

TOP VIEW

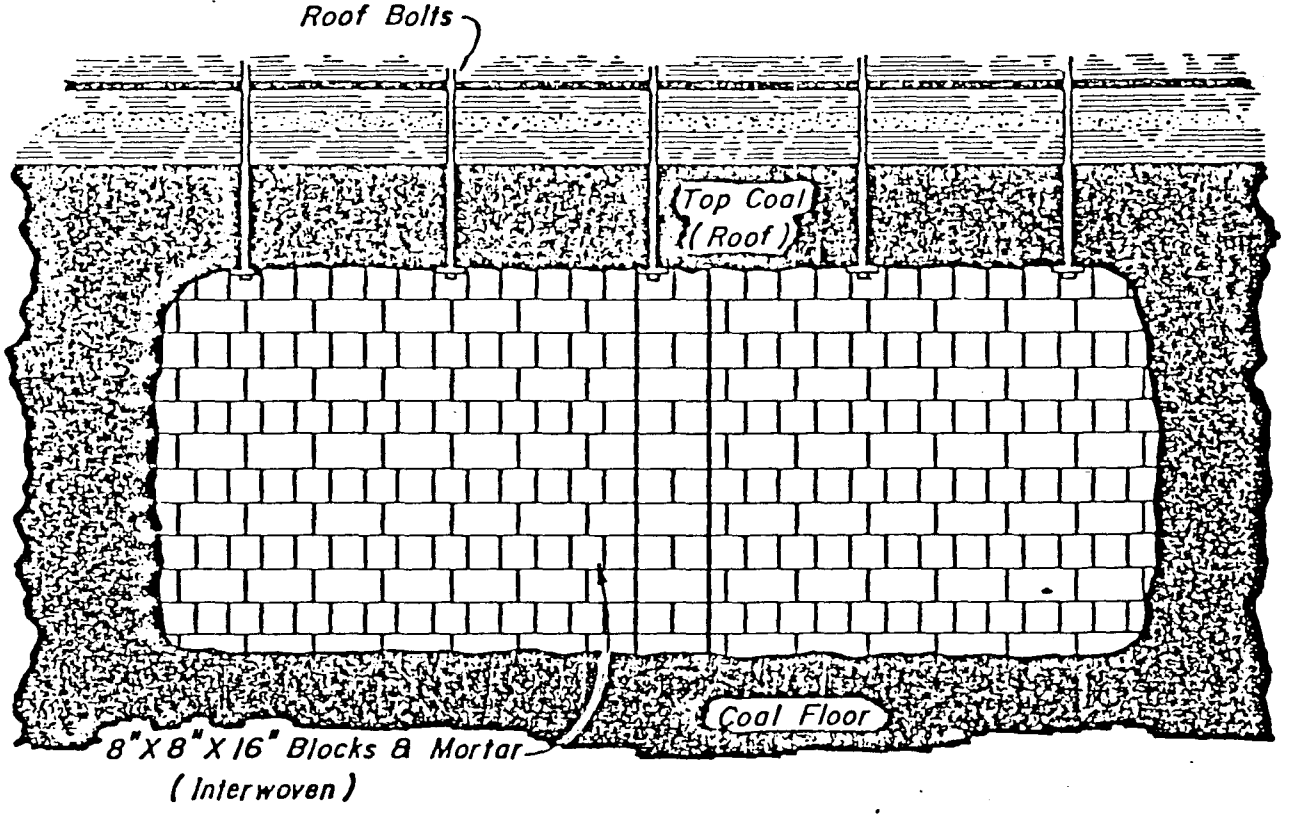

FRONT VIEW

Solid Concrete Block Seal

Scale: 1/4" = 1'

Valley Camp, Inc., has been conducting a surface water monitoring program for the past three years, in conjunction with the Belina No. 1 and Utah No. 2 Mines. Samples have been analyzed for most of the parameters listed in Figure 3-12 at various sites near the mine. However, one of the primary purposes of implementing this plan is to enlarge the existing hydrologic monitoring plan to accomodate expanding mining activities. Thus, as a result of the hydrologic inventory by Vaughn Hansen Associates, additional representative surface and ground water sources have been chosen for inclusion in the existing monitoring program. As mining progresses, data collection will begin at a surface water monitoring station in sufficient time to allow for the collection of one complete year of data before the area is impacted from below or on the ground. Additional surface water stations have been chosen on the streams as shown on Hydrology Map, Map F, Volume IV. Once data collection at a station begins, data will be collected according to the schedule outlined in Figure 3-13, unless prior arrangement is made with the Regulatory Authority.

Ground water monitoring will consist of water quality and flow and/or water level data collection from the representative springs and observation holes in the early summer and mid-autumn of each year. Access problems created by heavy snowfall will probably preclude more frequent sampling

Figure 3-12

Surface water baseline monitoring parameters

Field Measurements	Laboratory Meaurements
pH	Acidity
Water Temperature	Alkalinity
Air Temperature	Bicarbonate
Specific Conductance	Calcium
Discharge or Water Level	Chloride
Dissolved Oxygen	Fluoride
	Magnesium
	Potassium
	Sodium
	Sulfate
	Arsenic
	Barium
	Baron
	Cadmium
	Chronium
	Copper
	Iron (Total and Dissolved)
	Lead
	Manganese
	Mercury
	Selenium
	Silver
	Zinc
	Total Suspended Solids
	Total Dissolved Solids
	Nitrate
	Ortho-phosphate
	Phenol
	Oil and Grease

Figure 3-13 WATER QUALITY MONITORING SCHEDULE FOR VALLEY CAMP MINE DISCHARGE

Parameter	Monitoring Requirements	
	Measurement Frequency	Sample Type
Flow	Two per month	Measured
Total Suspended Solids	Two per month	Grab
Total Iron	Two per month	Grab
Total Dissolved Solids	Two per month	Grab
Oil & Grease	Two per month	Grab
pH	Two per month	Grab

at the ground water monitoring stations. Locations of the ground water monitoring stations can be found on Hydrology Map, Map F, Volume IV.

Mine water discharge is currently being monitored at the Belina Mine Complex at the discharge point from filter pond No. 5. This discharge is allowed by an NPDES permit, No. UT-0022985. Mine water discharge has been monitored since 1977, and, as a result, baseline data was acquired early in the mine life.

Mine discharge flow is determined by a parshall flume, and the monitoring parameters, measurement frequency, and sample type are shown on Figure 3-13.

In addition to mine discharge, water consumption losses are also calculated utilizing coal moisture content, and ventilation and evaporation losses.

Significant changes in the sources of water in the mine will be reported during the period of operation.

The Valley Camp permit area is located within the Book Cliffs, and the adjacent Wasatch Plateau,

which act as recharge areas for regional ground water systems (Price and Arnow, 1974). Only a small portion of the annual precipitation, much less than 5%, recharges the ground water supply (Price and Arnow, 1974; U. S. Geological Survey, 1979). This is due to the presence of relatively impermeable shale layers near the surface over much of the area. For this reason, little, if any, impact is expected to occur due to mining operations; therefore, no plan has been undertaken for recharge of ground water other than by natural means.

The mining activities should not adversely affect the hydrologic regime. Existing seasonal water quality is described in Appendix B, Volume II. Also refer to Hydrology Map, Map F-3, Volume IV, for additional seasonal water quality data.

Section 784.13 describes measures taken during the mine reclamation to provide protection for the hydrologic balance.

784.15 POST MINING LAND USE

The premining land uses for the affected surface lands are shown on the Premining Land Use Maps, Maps I and I-1, Volume IV. These maps were constructed using information obtained from U.S.G.S. Land Use Maps (Nephi, Utah). The post mining land uses for the affected surface lands are shown on the Post Mining Land Use Map, Map J, Volume IV.

It is evident by comparing the premining and post mining land uses presented on Maps I-1 and J, respectively, that Valley Camp, Inc. proposes to return the affected surface lands at the Utah #2 load out area, and area along the conveyor route to their original premining land uses. Valley Camp, Inc. proposes to change the land use at the Belina #1 and #2 portal sites and the general office complex. The Belina portal sites were originally (premining) classified as shrub and brush rangeland land use. Valley Camp, Inc. proposes to upgrade the post mining land use for the Belina portal sites to recreational land use. The portal area land is a private leased area and it is possible that the landowner will want to use the area after mining for a cattle holding facility. The recreational area planned in the reclamation plan is compatible with such use.

The Belina portal sites before mining were of little value commercially or agriculturally. The trees in the area were too sparse and inaccessable to be of commercial value. The scrub and brush rangeland was not capable of supporting agricultural row crop vegetation due to the shallow topsoil and steep slopes of the area. The proposed post mining land use for the Belina portal areas is recreational land use, which will upgrade the historical land use of the area.

By upgrading the land use for the Belina portal sites to recreational land use, added benefits could be obtained from the land. The Belina portal sites are in close proximity to the Manti LaSal National Forest, and could provide camping and other recreational uses to the area.

To achieve the proposed recreational land use, the Belina portal areas will be graded in a timely manner as described in the Reclamation Plan presented in Section 784.13 of this volume. The area will be re-vegetated, after grading is complete, using the reseeding mixtures listed in Appendix B, or other approved mixtures. Areas re-vegetated during the mining operation period and meeting re-vegetation requirement of 817.116 will not be re-vegetated. The Belina portal areas will be reseeded primarily with grasses and forbes to provide open space for camping and other recreational uses.

INLET CONFIGURATION FOR CULVERT

Figure 5-3

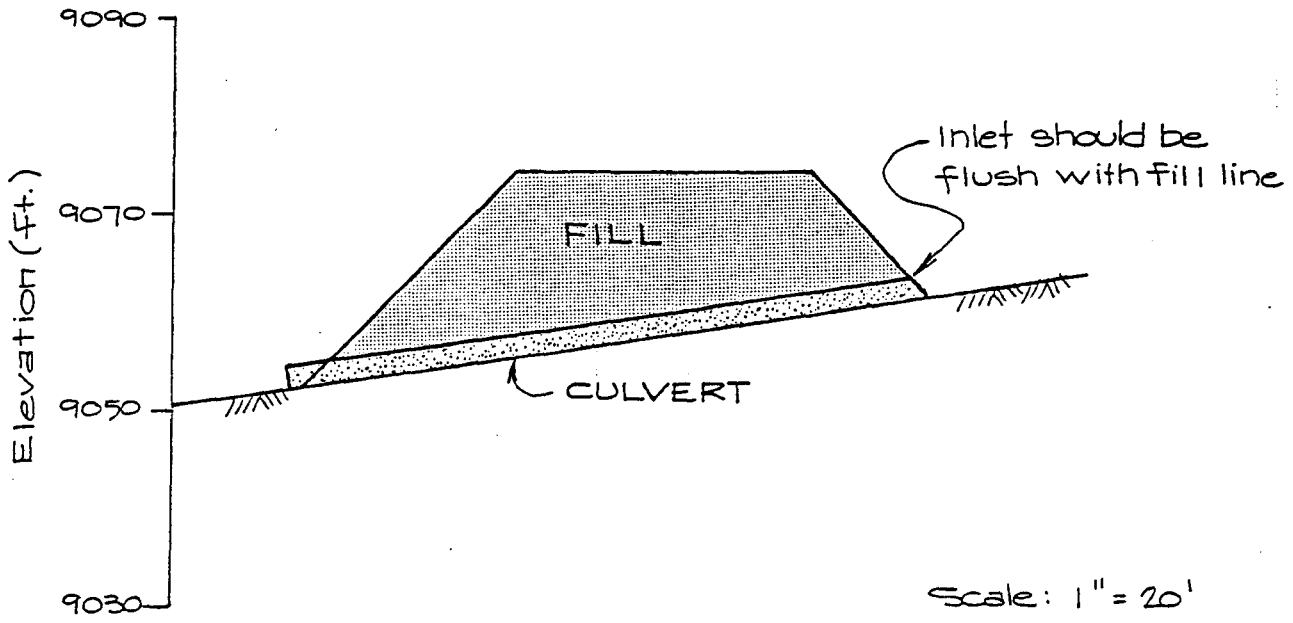

Project No 783-1264 Reviewed OWL Date 4-86

Some shrubs and trees will be planted in selective places and on steep slope areas to minimize the environmental impacts of erosion and to more efficiently blend the area in with the surrounding undisturbed vegetation.

Primarily native species of seed, seedling or tublings will be used to re-vegetate the area. Therefore, the re-vegetated area will be compatible to the surrounding undisturbed vegetation and offer the equivalent premining natural habitat as well as the new benefits of having a recreational area close to the Manti LaSal National Forest.

The private road leading to the Belina portal sites will be left intact to minimize the impact on the environment as well as to provide access to the area for whatever use the sites may be approved for. No modifications of the present drainage characteristics are anticipated.

The general office area was originally (premining) shrub and brush rangeland. The area has never been utilized agriculturally, and possessed too little trees to be of commercial value. By upgrading the land use to recreational, considerable more land use could be obtained. The general office complex would make a very nice installation for recreation use by a school district, very similar to the Alpine School District's camp adjacent to the complex. No modification for drainage of this area would be required. The total disturbed area

associated with the office complex, consisting of building site, parking lot and access road, is approximately 2.3 acres.

The proposed recreational post mining land use for the Belina portal sites and general office area is compatible with the land uses of adjacent lands. The proposed recreational post mining land use is also compatible with Carbon County's land uses. The County already has the area zoned for recreational land use.

The feasibility of the proposed post mining land use plan can be seen by reviewing the presented Reclamation Plan in Section 784.13 of this volume. Also, the timing and costs involved in achieving the proposed post mining land uses can be found in the aforementioned Reclamation Plan. The proposed post mining land uses will not pose any actual or probable hazards to the public's health or safety or involve unreasonable delays to the reclamation process.

Once the affected surface lands are turned over to and accepted by the land owners, the applicant's responsibility for maintenance of any sort on these areas is eliminated, and thus, no such maintenance plan is included.

The proposed post mining land uses are consistent with those of the surface owners, state and local land use plans. Comments from the owners of record; Della L. Madsen and Robert G. and

Hilda M. Hammond (Overland Conveyor Route), Nick and Helen Marakis (Load-out Area), and Milton Oman (Belina Mines Area), are included in this section as Figures 3-14, 3-15 and 3-16.

Figure 3-14

Comments by Della L. Madsen and
Robert G. and Hilda M. Hammond

Concerning Valley Camp's Proposed
Post Mining Land Use for Their Land.

Contact with the landowner is being made and the comments will be forwarded to the regulatory agency as soon as they are received.

Figure 3-15

Comments by Nick and Helen Marakis

Concerning Valley Camp's Proposed
Post Mining Land Use for Their Land

Contact with the landowner is being made and the comments will be forwarded to the regulatory agency as soon as they are received.

Figure 3-16

Comments by Milton Oman
Concerning Valley Camp's Proposed
Post Mining Land Use for Their Land

Contact with the landowner is being made and the comments will be forwarded to the regulatory agency as soon as they are received.

784.16 RECLAMATION PLAN: PONDS, IMPOUNDMENTS, BANKS, DAMS AND EMBANKMENTS

No new sedimentation ponds, water impoundments, or coal processing waste structures are proposed within the mine plan area, at present. All existing structures are described in Section 784.12, Operation Plan: Existing Structures.

784.17 PROTECTION OF PUBLIC PARKS AND HISTORIC PLACES

No public parks or historic places are found in the mine plan or adjacent area except as noted in Volume II of the permit application (Section 783.12).

784.18 RELOCATION OR USE OF PUBLIC ROADS

Valley Camp, Inc., will not conduct mining activity within 100 feet of the right-of-way line of any public road, except where the mine haul road or future conveyor or access roads join that right-of-way. The haul road, including the section of public road, is described in detail in Section 784.24, Transportation Facilities.

784.19 UNDERGROUND DEVELOPMENT WASTE (Golder, 1979)

Based on the definition of underground development waste in Section 701.5, Definitions, Valley Camp is addressing the fill material placed below the Belina mine #2 portals in this section. The fill placement was designed and supervised by Golder Associates, 10628 N.E. 38th Place, Kirkland, WA 98033. The final report to Valley Camp is referenced in the bibliography to this volume.

Control of drainage, both surface water and ground water, is critical to the overall development of the surface facilities at the Belina mines. This includes surface precipitation water, snowmelt, ground water intercepted in cuts seeps or springs, and ground water intercepted and collected in the mine workings and pumped to the surface for ultimate discharge. Methodologies used to predict the flows expected for the various watersheds encountered in the Belina Mine Area, are presented below.

Peak flow on the small watersheds in this study area were estimated using the Rational Method (Grey, 1973). This method is based on the criteria that for storms of uniform intensity, evenly distributed over the watershed, the maximum rate of runoff occurs when the entire watershed is

contributing at the outlet and that this rate of runoff, or flow, is proportional to the rainfall intensity. The equation is:

$$Q = ciA$$

where:

c = Runoff coefficient, determined empirically

i = Maximum rainfall intensity, in/hr, whose duration is equal to the time of concentration of the watershed

A = Area of watershed, acres

Q = Peak flow, cfs.

Maximum rainfall intensitites for specified return periods were calculated using precipitation data from a gauging station at Clear Creek, Summit, Utah (Richardson, 1971) (Figure 3-17). The duration time used when choosing the rainfall intensity was equal to the time of concentration of the particular section of the drainage basin. A 10 year return period was used when choosing the rainfall intensity, as specified by the OSM regulation for permanent diversions.

The time of concentration was determined using the Upland Flow Method (Kent, 1972). Types of flow considered in the Upland Method are: overland, through grassed waterways, over paved areas, and through small upland gullies. Upland

Figure 3-17

ESTIMATED PRECIPITATION DEPTHS FOR VARIOUS RETURN PERIODS AND DURATIONS AT CLEAR CREEK, SUMMIT, UTAH (FROM RICHARDSON, 1971)

	DURATION									
	5 Min	10 Min	15 Min	30 Min	1 Hr	2 Hr	3 Hr	6 Hr	12 Hr	24 Hr
1	.10	.16	.20	.28	.35	.46	.57	.84	1.08	1.33
2	.12	.19	.25	.34	.43	.57	.70	1.04	1.34	1.65
5	.16	.24	.31	.43	.54	.72	.90	1.34	1.73	2.14
10	.19	.29	.37	.51	.65	.86	1.06	1.55	1.99	2.45
25	.24	.38	.48	.66	.84	1.08	1.31	1.88	2.39	2.92
50	.25	.38	.48	.67	.85	1.13	1.40	2.07	2.67	3.29
100	.27	.42	.53	.73	.93	1.24	1.54	2.29	2.96	3.65

VELOCITIES FOR UPLAND METHOD OF ESTIMATING T_c

Figure 3-18

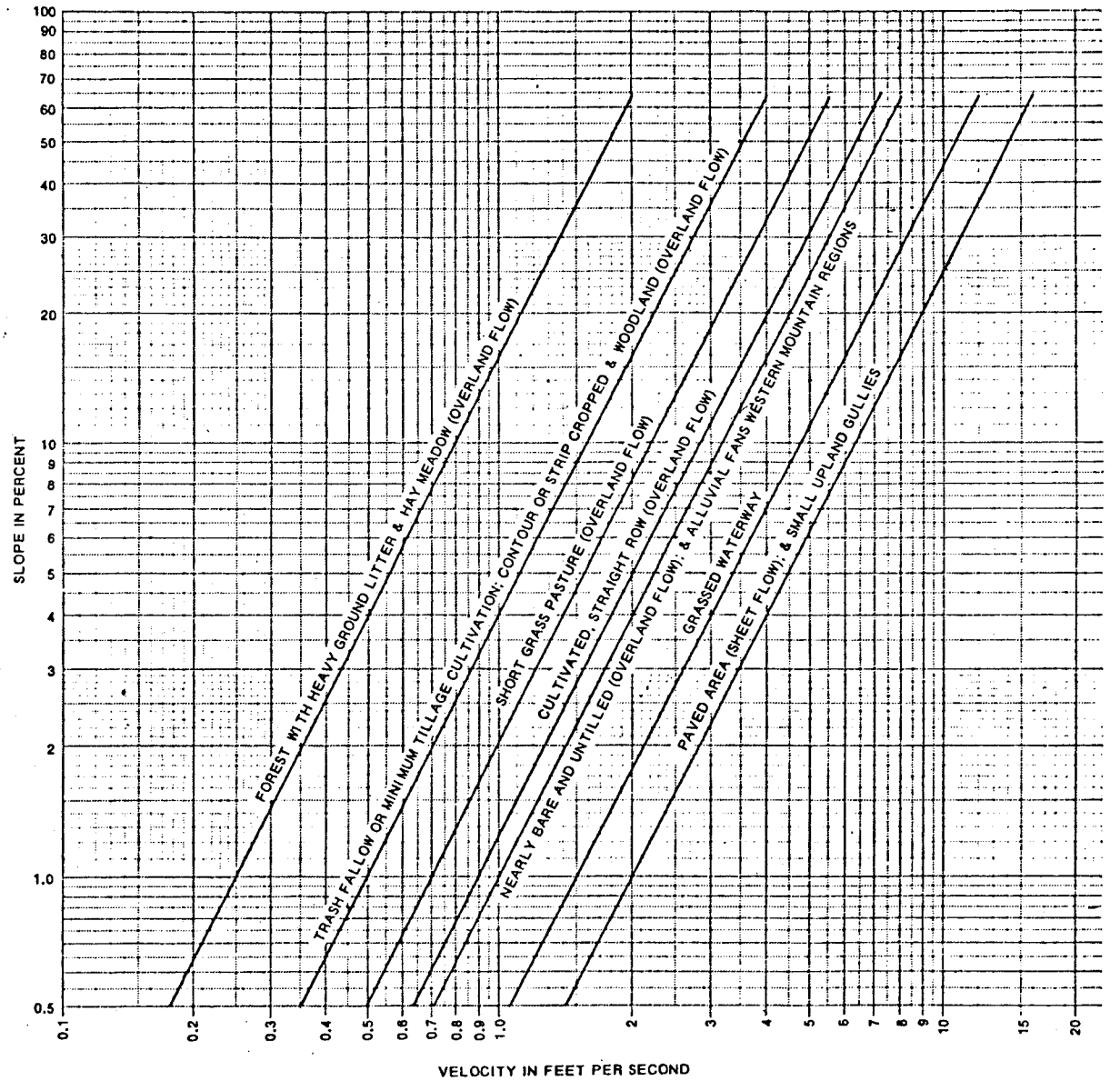

after Kent, 1972

Project No. 783-1181-1 Reviewed CWL Date 4-80

flow employed in this method can be a combination of these various surface runoff conditions. The velocity of flow is determined using Figure 3-18. The time of concentration of the drainage basin then is equal to the sum of the times required for water falling on the farthest point of the watershed, flowing over various types of terrain, to reach the outlet.

The runoff coefficient in the Rational Method is dependent on the topography, soil type and vegetation of the watershed. Values of the runoff coefficient can be found (Grey, 1973). An estimate of the coefficient was made from these charts assuming:

Topography - Hilly Land
Soil - Open Sandy Loam $c = 0.03$
Cover - Woodlands

The drainage area of concern at the Belina mine site was divided into six sections (Underground Development Waste Map, Map L, Volume IV). The drainage characteristics and outflow were calculated for each section. Figure 3-19 lists the values used and outflow for each section. Outflow from sections I and VI is to be diverted outside the area of concern while the outflow from sections II-V is to be

Figure 3-19

CALCULATION OF FLOW RATES BY SECTION*

SECTION NUMBER	I	II	III	IV	V	VI
AREA (acres)	23.6	28.3	29.8	36.5	36.1	8.3
tc (min)	8.6	14.7	15.3	24.3	24.2	17.4
i (in/hr)	1.74	1.48	1.48	1.25	1.25	1.48
c RUNOFF COEFFICIENT	0.3	0.3	0.3	0.3	0.3	0.3
Q =ciA (cfs)	12.3	12.6	13.2	13.7	13.5	3.7

* Refer to Map L, Underground Development Waste Map, Volume IV, for section locations.

carried via a culvert under the mine site and out of the drainage area. Water falling within the mine area is to be treated in a settling pond and then discharged. Details of the sedimentation pond are provided in Section 784.12, Existing Structures.

Construction of the underground development waste and sediment pond structure (as described in 784.12, Existing Structures) was commenced in September, 1979, and essentially completed in December, 1979. The construction of the underground development waste was carried out under the full-time inspection of a geotechnical field engineer, who was responsbile for insuring that the construction was carried out in conjunction with standard engineering practices and the requirements of the Division of Oil, Gas, and Mining. This consisted of material inspection, stripping and removal of topsoil and organic debris, and placement of the fill materials, including the rock buttress. Also, the placement of a granular filter and underdrains, and the general embankment fill.

An as-built schematic longitudinal section of the valley fill and sediment pond is shown in Figure 3-20. There are essentially five different earth materials involved in the structure.

Project No 79-1156A Reviewed CWL Date 2-80

LONGITUDINAL GEOMETRY FOR VALLEY FILL

ZONE	MATERIAL	O	c'(psi)
I	Rockfill Buttress	38°	0
II	Graded Filter	38°	0
III	Rockfill Drain	38°	0
IV	Embankment Fill	43°	4.85
V	Base	38°	30.00

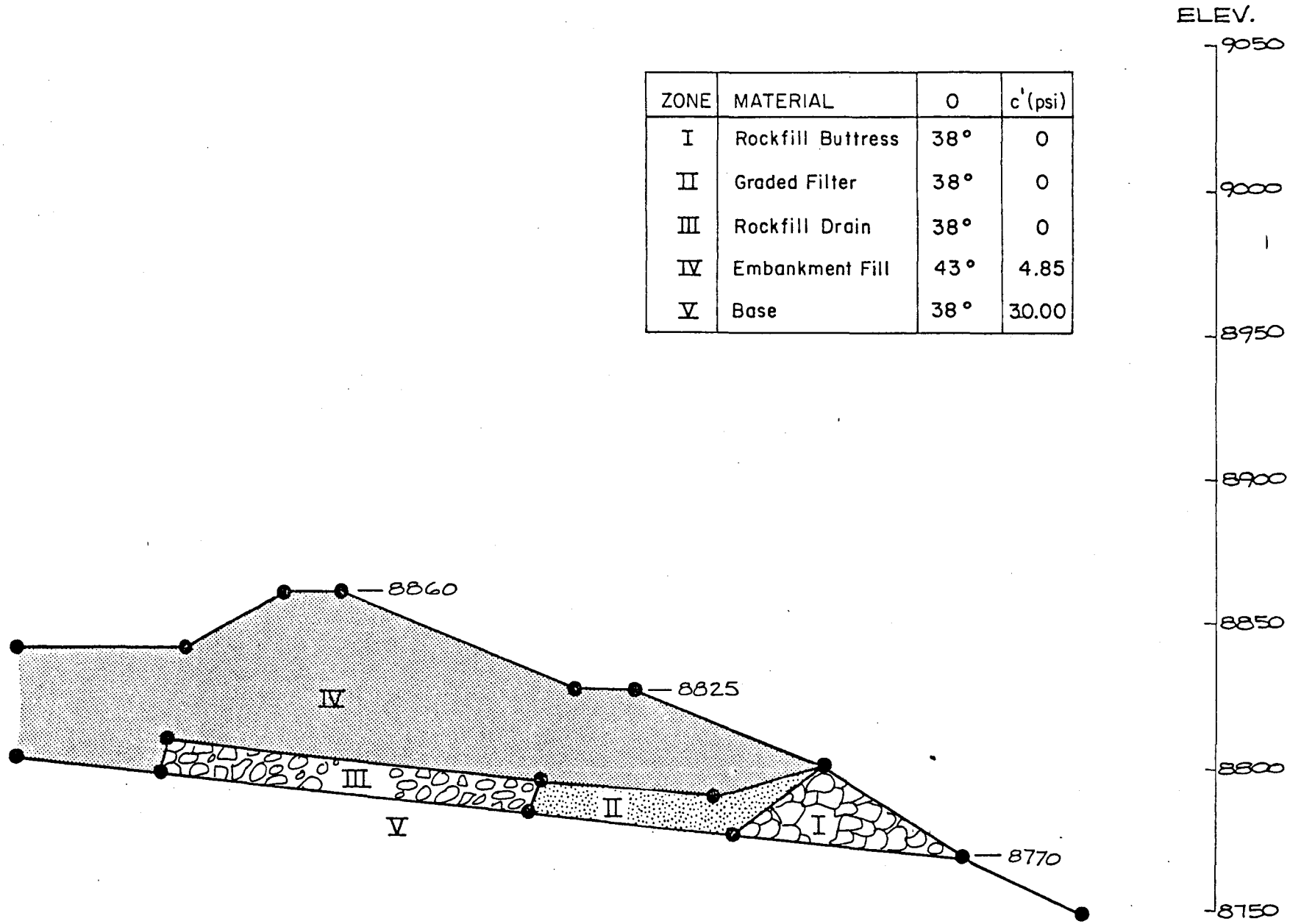

Figure 3-20

Golder Associates

These materials are as follows:

1. Rock Toe Buttress, consisting of boulders and cobbles ranging from approximately 1-4 feet in mean dimension.
2. Graded Filter, consisting of sand and gravel blended to provide protection against piping of the general embankment fill.
3. Rockfill Drain, consisting of small boulders and cobbles ranging from approximately 2 feet to 6 inches in mean dimension.
4. General Embankment Fill
5. Foundation Material, consisting of the undisturbed material soil and rock materials comprising the valley floor and walls.

The location and geotechnical strength characteristics of the various materials are presented on Figure 3-20. Particle size gradations of the general embankment fill and the graded filter are shown on Figure 3-21.

The construction of the earthfill and sediment pond was inspected in the field by a qualified geotechnical field engineer. The inspections consisted of determination of material suitability, material placement techniques, and in-place density testing to determine the degree of compaction

Project No. 783-1156A
Project Valley Camp

Golder Associates

Date 6-1980
By HK

GRAIN SIZE DISTRIBUTION

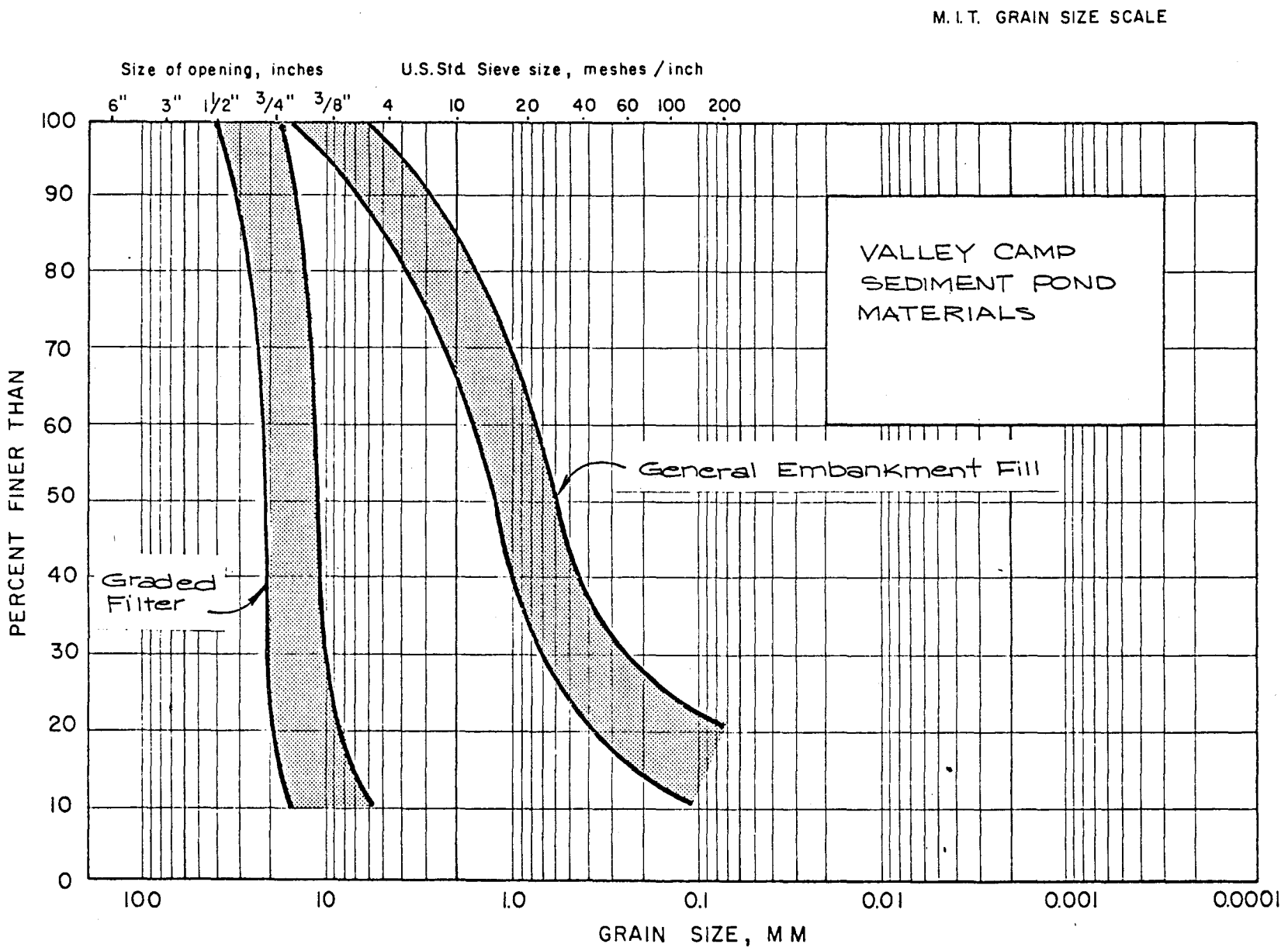

Figure 3-21

obtained-in the materials. Observation of the sequential phases of the construction are discussed individually below:

1. Rock Toe Buttress

Prior to placement of the rock toe buttress, all areas to receive fill were stripped of topsoil and loose or surficial materials. The rock toe buttress was then placed by end dumping or moving with dozers in order to insure interlocking and proper resting of the individual boulders.

2. Graded Filter

Upon completion of the rock toe buttress, the graded filter material was placed. Placement was carried out in 6 inch to 12 inch lifts, with the material spread by dozers and compacted in place. No compaction tests were carried out in the filter materials due to their granular nature, but careful observations were made throughout the filter placement to insure continuity of material and adequacy of the placement techniques.

3. General Embankment Fill

After the graded filter material was placed, general embankment fill was compacted in lifts to form the valley fill and sediment pond embankment. Compaction

testing was carried out as the fill was placed to insure that the material was compacted to at least 95% of Modified Proctor Density, per ASTM D-1557. Results of the compaction testing are presented in summary form on Figure 3-22.

Stability analyses of the as-built section have been carried out to insure that the fill has an adequate static factor of safety against failure. The analyses were carried out using the Bishop Method, which essentially assumes a circular failure arc through the mass and computes the stability of forces along that arc. This is then carried out on a variety of failure arcs until the minimum factor of safety is determined. The analysis was carried out using the impact parameters and fill geometry shown on Figure 3-20, and various water seepage paths through the embankment and fill. The results of the analyses are presented in Figures 3-23 through 3-26. Critical surfaces are shown on the figure, with the computed factor of safety. As can be seen, the minimum computed static factor of safety for the composite embankment is 1.8; the critical failure arc is located in the lower portion of the embankment. This is within the requirements set forth by OSM, in Section 817.72 (a).

COMPACTION TEST RESULTS

Figure 3-22

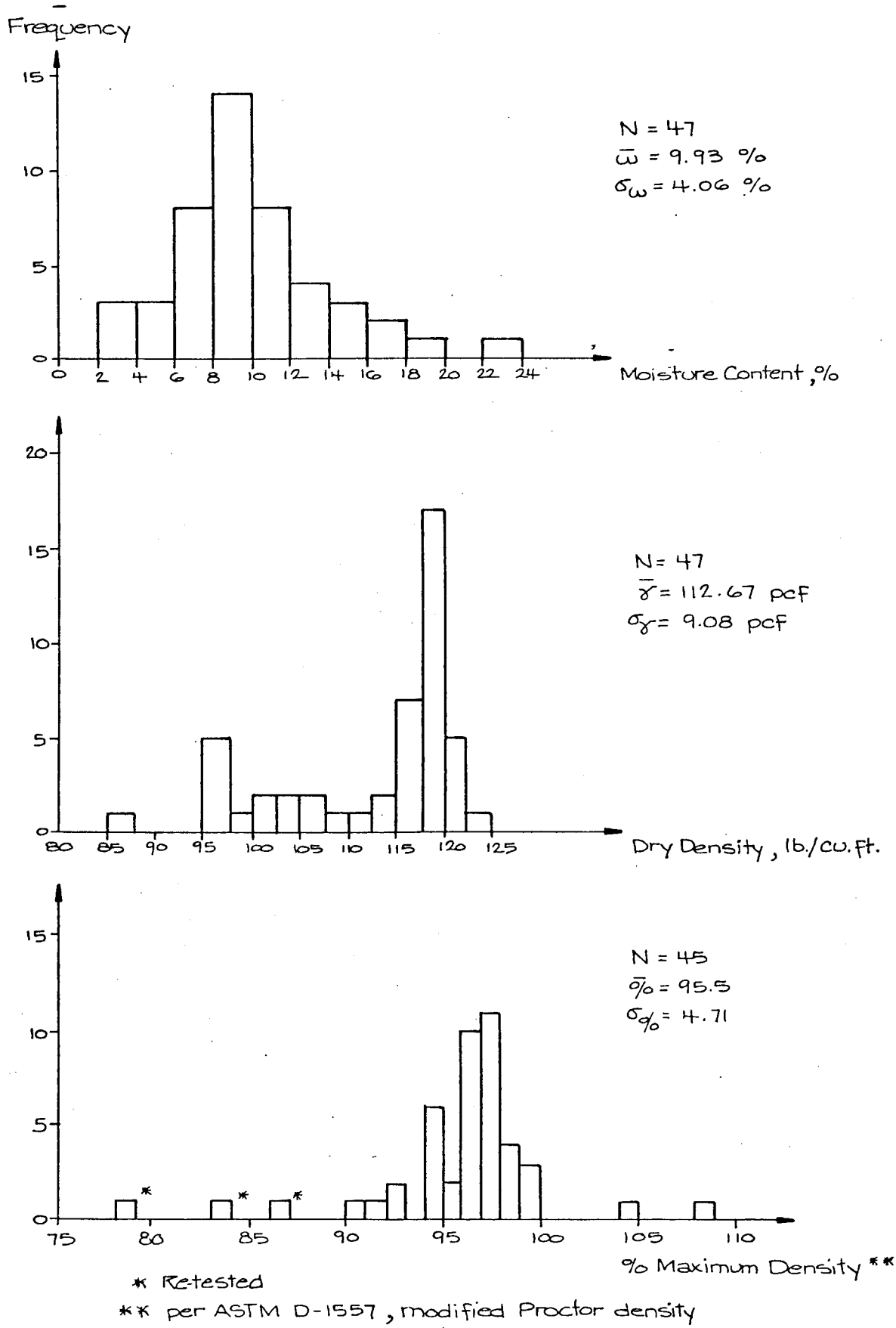

Project No. 793-11564 Reviewed CWL Date 2-80

Project No 790-1156A Reviewed CWL Date 2-80

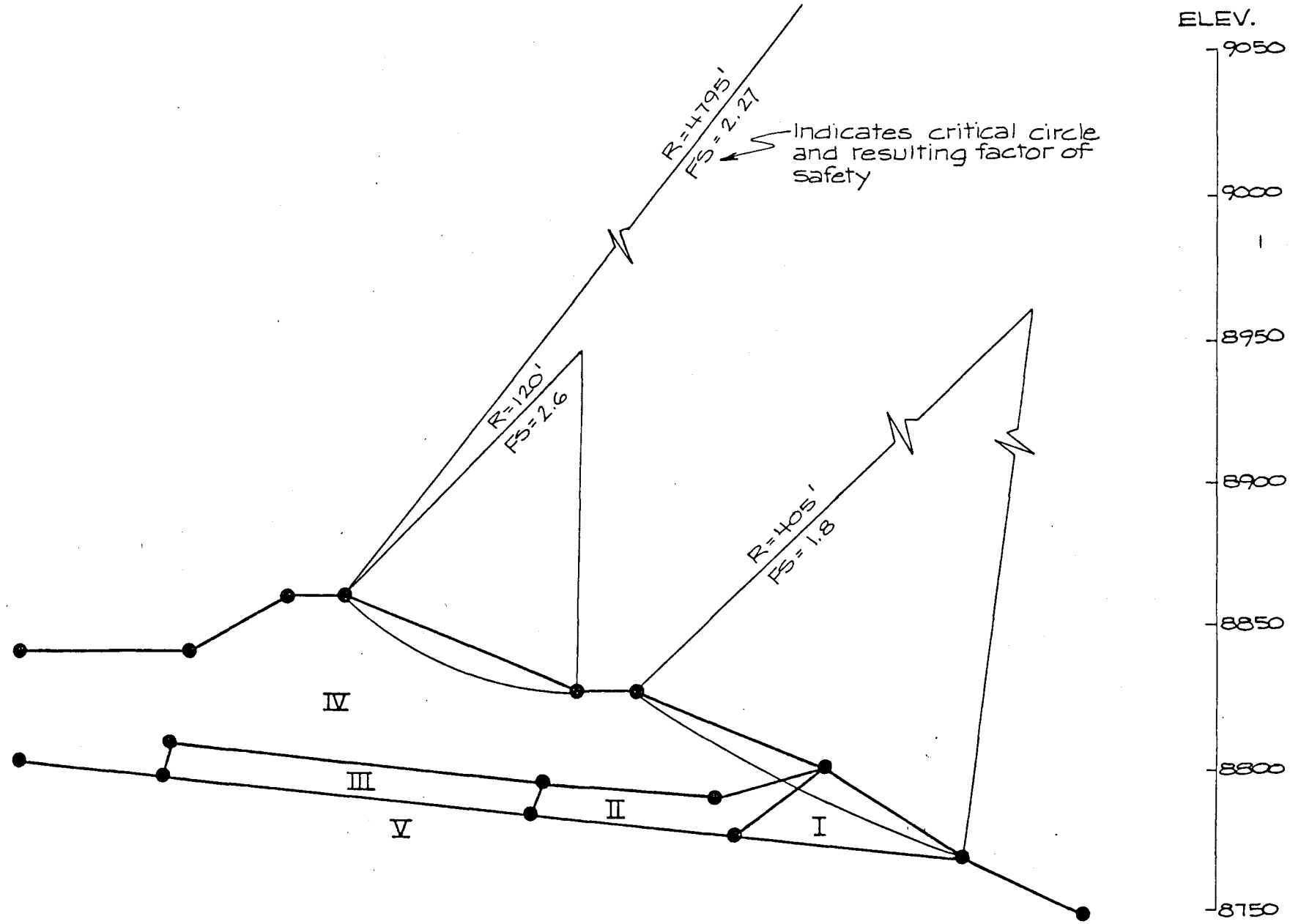

EMBANKMENT STABILITY ANALYSES
DRAINED

Figure 3-23

Golder Associates

EMBANKMENT STABILITY ANALYSES
STEADY STATE — FULL DRAINAGE INTO II

Figure 3-24

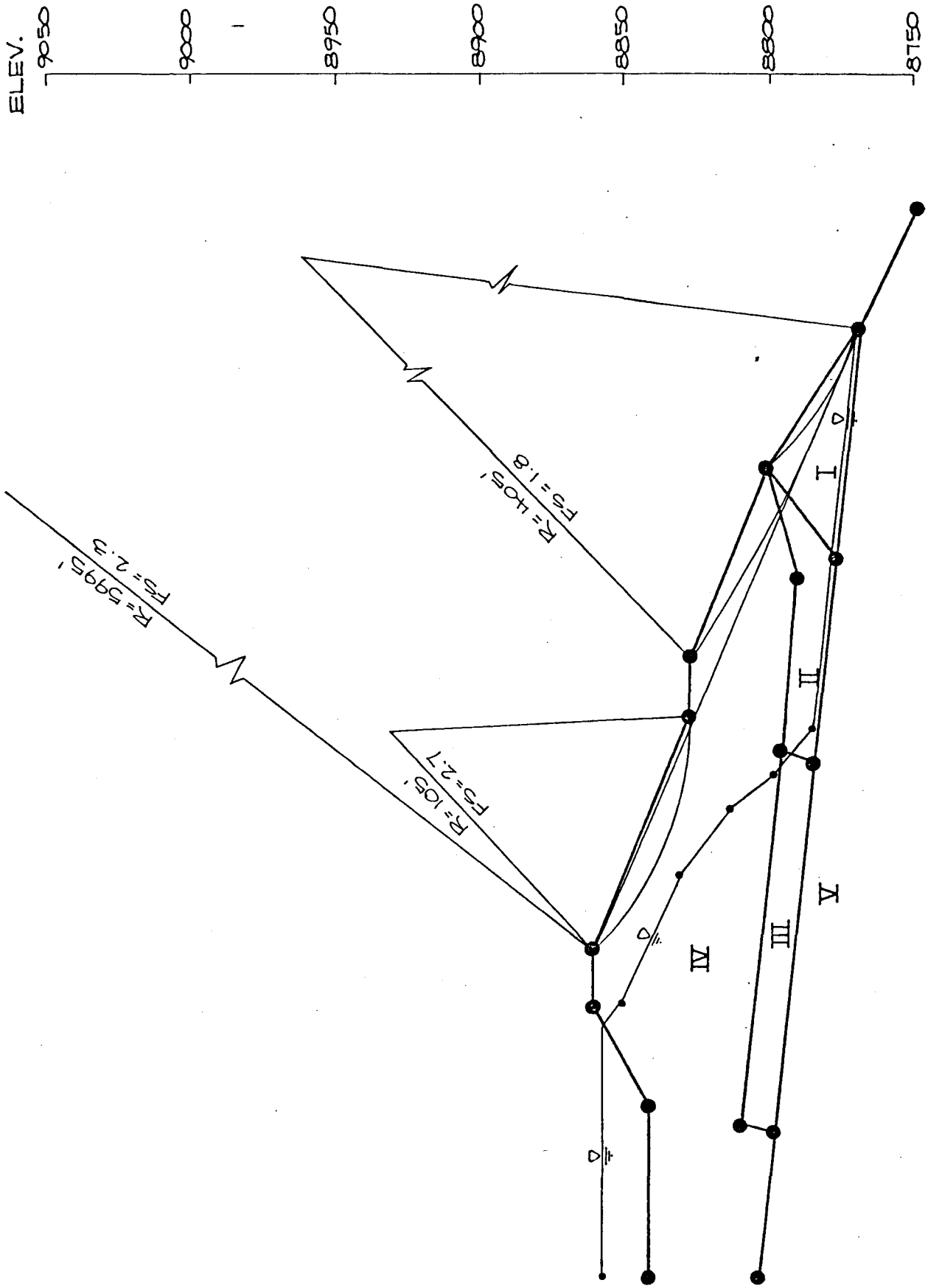

Project No 793-1156A Reviewed CWL Date 2-80

EMBANKMENT STABILITY ANALYSES
STEADY STATE — II PARTIALLY CLOGGED

Figure 3-25

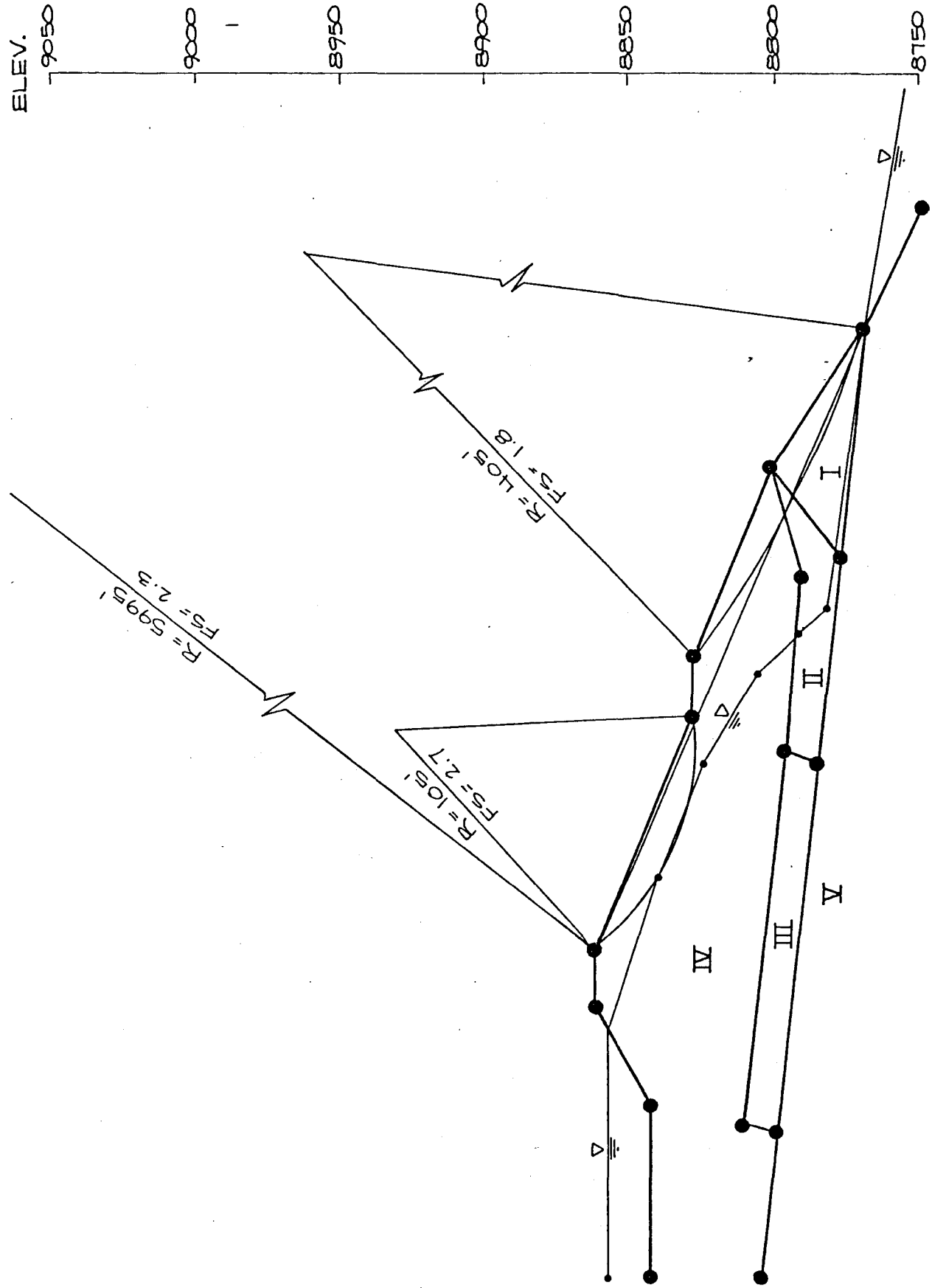

Project No. 793-1156A Reviewed CML Date 2-80

Golder Associates

EMBANKMENT STABILITY ANALYSES
STEADY STATE — FULL DRAINAGE INTO III

Figure 3-26

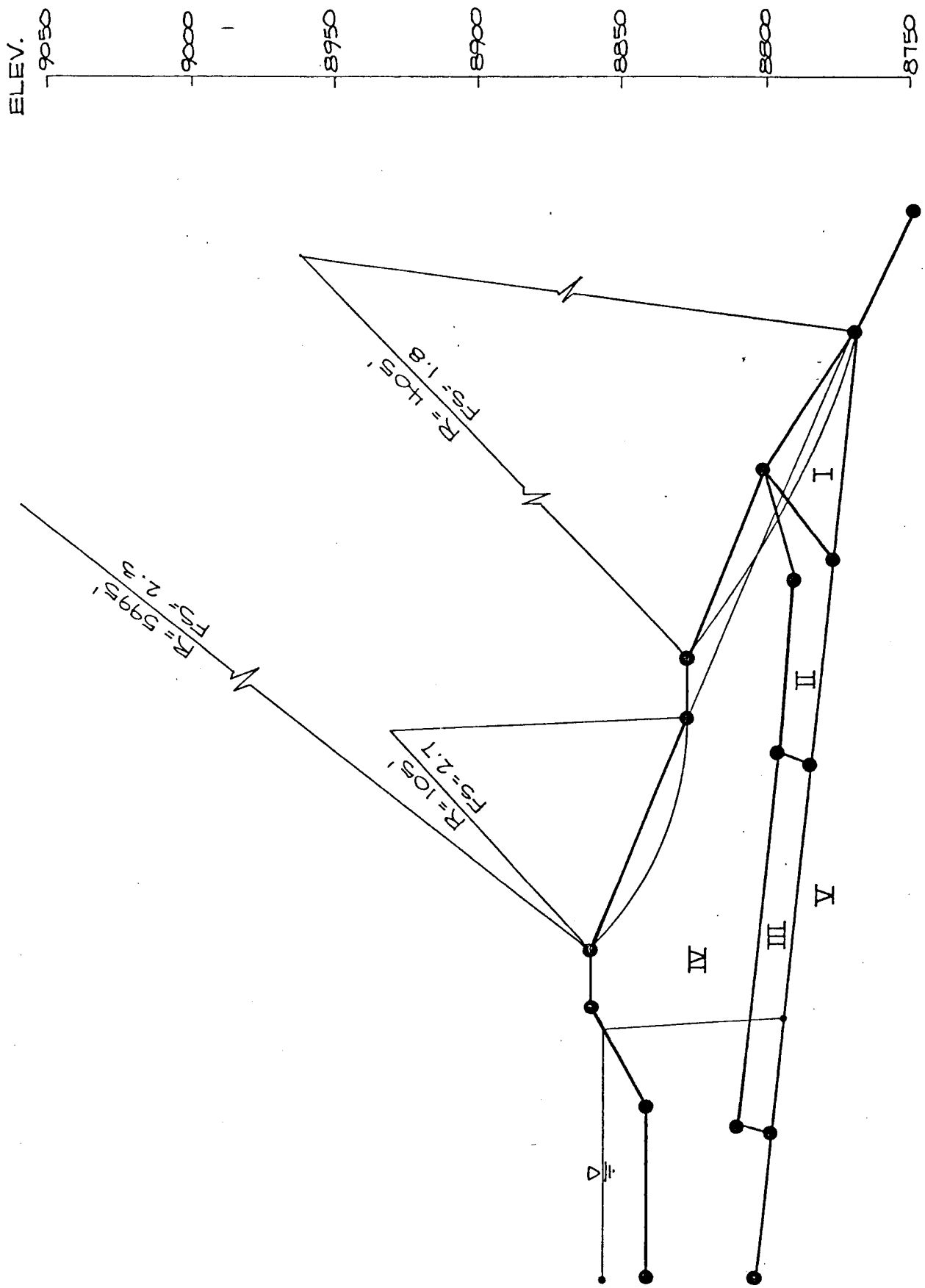

Project No 793-1156A Reviewed CWL Date 2-80

A thorough-inspection of the embankment will be undertaken at least once per year until reclamation is completed. When examining for stability and general inspection the inspector will be looking for any of the following conditions:

- Seepage from anywhere on the down-stream side of the embankment but especially around the discharge pipe
- Erosion of embankment slopes
- Erosion around entrance or exit of discharge pipe
- Clogged principal or emergency spillway
- Check slope stakes for obvious slope movement (if utilized)
- Placement of wave erosion protection (if utilized)
- Erosion at spillway discharges
- Clogging of dewatering device.

Monitoring for embankment movement (Skelly and Loy, 1979) will also be a part of this inspection where applicable. This will be performed by setting stakes in the embankment, along the toe and several rows proceeding up from the toe. The original position and elevation will be recorded with reference to a permanent landmark. These positions will be checked during inspection. If unstable or potentially unstable conditions exist, corrective measures will be taken immediately.

In an effort to minimize further land disturbance, existing roads were incorporated into the diversion ditch scheme, for the underground development waste disposal site. This resulted in the construction of only one additional ditch that was constructed on undisturbed land. This ditch is labeled on Underground Development Waste Map, Map L, Volume IV, as ditch I-J.

Diversion channels were conceptually designed using the Chezy-Manning equation:

$$Q = \frac{1.486 \quad AR^{2/3} \quad S^{1/2}}{n}$$

where:

Q = flow, cfs

n = Mannings Roughness Coefficient

A = Cross sectional area

R_h = Hydraulic radius

S = Slope

Typical values of the roughness coefficient ranges between 0.022 and o.030 for excavated or dredged earth channels, straight and uniform with short grass and few weeds (Grey, 1973). An average value of 0.027 was used for the calculations.

Channels were designed, where possible, for ease of construction and maintanence. A trapezoidal cross section with sides sloping at 45 degrees and a base width of 1.0 feet was used. A tpical cross section of ditch along side of the existing road and an enlarged cross seciton through a ditch are shown on Figures 3-27 and 3-28, respectively.

Figure 3-29 shows the quantity of flow that will be carried by each ditch and the particular drainage sections that contribute to the flow. Figure 3-30 summarizes the calculated depths of flow in each channel. OSM regulation requires a minimum free board of 0.3 feet for diversion ditch design. This criteria will be satisfied by constructing all ditches to a depth of 1.0 feet.

The channels will be seeded to aid in the prevention of erosion during peak flows.

Velocities, calculated from Mannings equation, indicate that they would be in the range of 10-12 feet per second at peak flow. Measures needed to reduce the velocities (cutting new ditches in undistrubed areas with reduced slopes) or to prevent erosion (lining the channels with rocks sufficient to resist erosion) are felt to be too destructive to justify the gains.

Project No 793-1156A Reviewed CWL Date 9-80

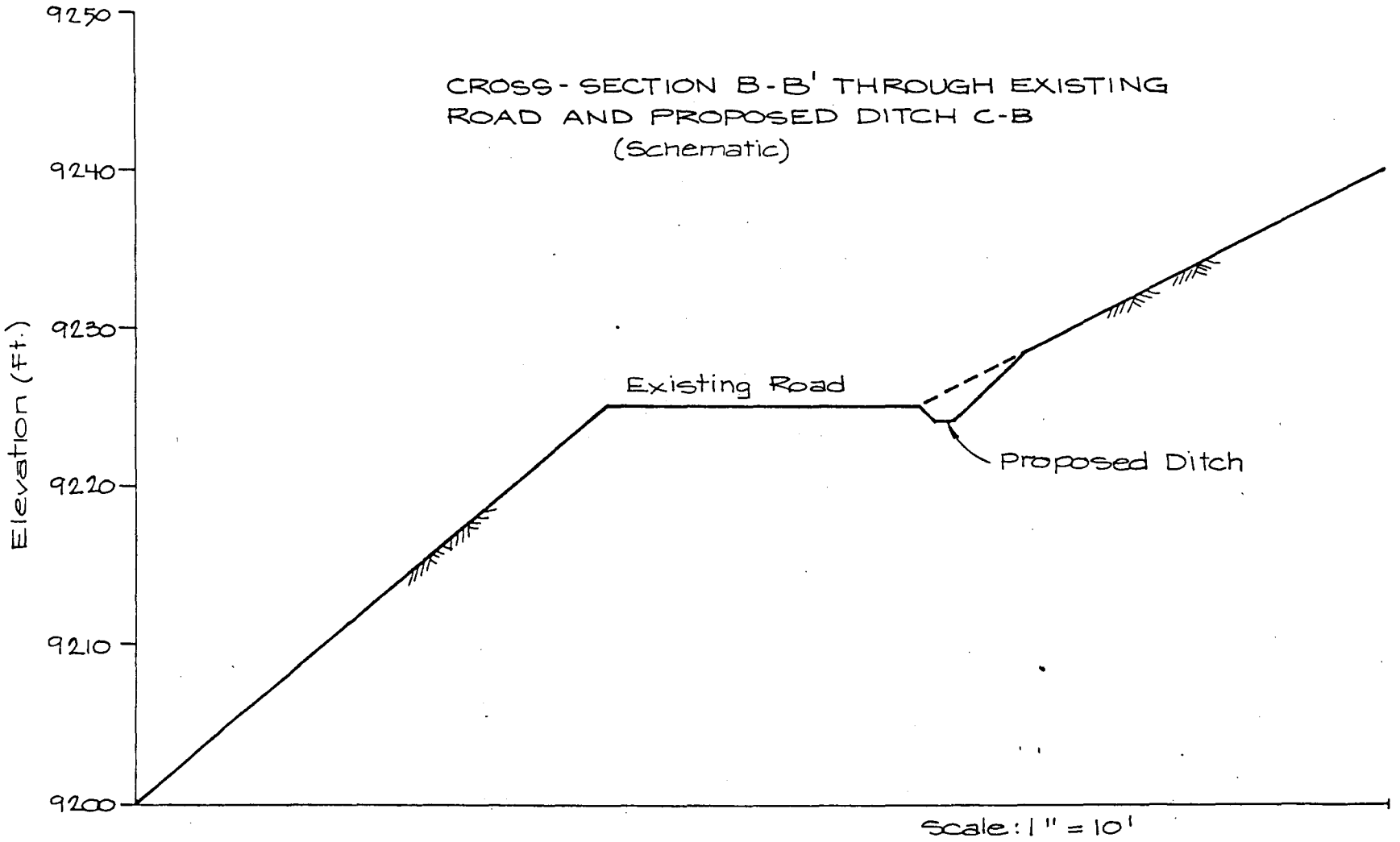

TYPICAL CROSS-SECTION THROUGH EXISTING ROAD AND PROPOSED DITCH C-B

Figure 3-27

Golder Associates

CROSS-SECTION THROUGH DITCH AND TYPICAL DESIGN CONFIGURATIONS

Figure 3-28

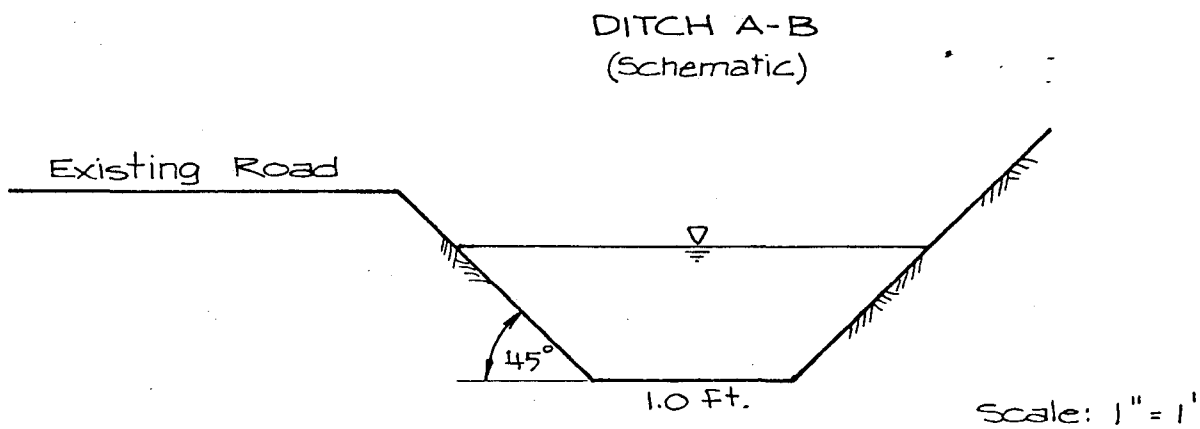

$$Q = \frac{1.49}{n} R_h^{2/3} S^{1/2}$$

$n = 0.027$
$S = 0.089$
$Q = 12.6$ cfs

Depth of flow y was solved for by trial and error.

$\therefore y = 0.70$ ft.

Project No. 793-1/864 Reviewed OAL Date 8-80

Figure 3-29

FLOW RATES TO BE CARRIED BY PROPOSED DITCHES

Ditch	CD	EF	GH	FH	AB	IJ
Drainage Section	I	I	I	I	II	VI
Q (cfs)	12.3	12.3	12.3	12.3	12.6	3.7

Figure 3-30

SUMMARY OF CALCULATED FLOW DEPTHS IN PROPOSED DITCHES

Ditch	Cross Section	Depth of Flow (ft.)
CD	Trapezoidal*	0.64
EF		0.64
GF		0.64
FH		0.64
AB		0.70
IJ		0.67

* Base = 1.0 ft, sides slope 45°

OSM regulation require energy dissipators at ditch stream interfaces if velocities of entering ditches are greater than that of the receiving stream. A situation of this nature occurs at only one place in the study area. This is where the outflow of ditch A-B (shown on Underground Development Waste Map, Map L, Volume IV) enters an existing stream. A rock check-dam was placed at the interface to be used as an energy dissipater.

Existing culverts were checked to see if they could carry the required 10-year storm. The 24-inch culvert at a road/-stream intersection southwest of the mine area will receive outflow from sections II and III resulting in a total flow of 25.8 cfs. The 24-inch culvert will carry this flow if the head water elevation is equal to 2.0 times the culvert diameter. Culvert flow quantities were determined using monographs for inlet controlled culverts in the Handbook of Steel Drainages and Highway Contruction Products, 1971. The maximum flow through this culvert will depend on the type of entrance inlet of the culvert. Our design was based on an end section conforming to the fill. A cross section of this inlet is shown in Figure 3-31.

The other culvert which carries flow underneath the mine area is 42 inches in diameter. Outflow from sections, II,

INLET CONFIGURATION FOR CULVERT

Figure 3-31

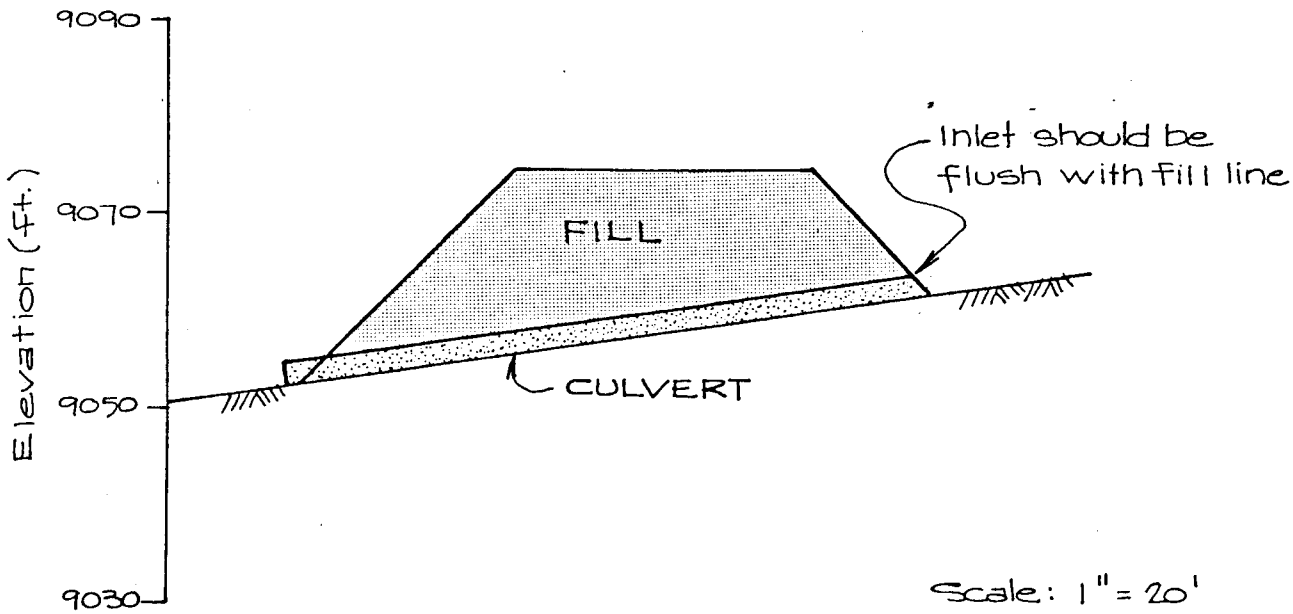

Project No. 783-1564 Reviewed Date 4-80

III, IV, and V would be carried by this culvert. Computations indicate that the culvert has a total capacity of approximately 52 cfs, and that the maximum flow as a result of a 100-year, 24-hour storm and 100 year, 6-hour storm are approximately 17 cfs and 19 cfs, respectively.

784.20 SUBSIDENCE CONTROL PLAN

A presubsidence survey within or adjacent to the Valley Camp, Inc. permit area conducted by Valley Camp, Inc. has demonstrated that areas for agricultural or silvicultural production of food and fiber and grazing lands are of such low production that they can be classified as non-renewable resource lands, as defined in Section 701.5. ,

Aquifers and areas for the recharge of aquifers and other underground waters will suffer minimal adverse impacts by the mining activities. Should subsidence occur the subsidence cracks will likely seal rapidly, preventing the deep percolation of water and subsequent loss of springs and other water sources (Hansen, 1980).

The Subsidence Base Map, Map K, Volume IV shows survey monument information, gas line locations, power lines and other information. The determination of the type of lands that do exist within and adjacent to the permit area is shown on the Premining Land Use Map, Map I, Volume IV. These land uses were determined by use of Federal government land use maps and private consultant work. The productivity levels of this land is discussed in Volume II (783.19) and Volume II, Appendix H. Refer also to Soil Map, Map E, Volume IV, and Vegetation Map, Map G, Volume IV.

The only structures which could be damaged if subsidence occurs are gas pipelines. These structures will be protected by limiting extraction directly under the pipelines and within an area including a 35° angle of draw from the lowest coal seam to be mined. Because of the limited recovery of the coal resource resulting from the above, an alternative approach would be uncovering the gas lines, extracting the coal below and then recovering and reclaiming the surface at a later date when the majority of any subsidence which may occur has done so. This procedure has not been approved as part of the applicant's Subsidence Control Plan, but will be pursued with owners of the gas lines and proposed for approval as an addendum. These areas are shown on the Subsidence Control Plan Map, Map K, Volume IV.

Pursuant to applicant's presently approved Subsidence Control Plan, Valley Camp, Inc. has entered a cooperative agreement with the Manti-LaSal National Forest. Pursuant to the agreement, subsidence will be monitored on an annual basis by photogrammetric means. That agreement is made part of this permit application and is included as Appendix C.

784.21 FISH AND WILDLIFE PLAN

Aquatic Resource Monitoring Plan

Eccles Creek. Adequate information for describing the aquatic resources of Eccles Creek is contained in Volume II of the permit application. Available data include fish survey results (UDWR, 1968-1979); macroinvertebrate survey results (Winget, 1979); water quantity and quality survey results (Hansen Associates, 1979-1980); and stream habitat observations (Winget, 1979). Yearly monitoring of stations EC03, EC04 and EC05 will commence the spring of 1981 -- macroinvertebrate samples and habitat measurements (including sediments) will be taken spring and fall, as required. Information on fish surveys will be obtained from UDWR. Regular water quality and quantity monitoring will be continued as required. Intensity and duration of sampling will be dependent upon success of sedimentation control measures.

Pleasant Valley Creek. No surface disturbance of Pleasant Valley Creek is anticipated at this time. Sedimentation from upstream land use is one of the main real and/or potential threats to Pleasant Valley Creek - sediment samples will be taken at a frequency and duration depending upon success of sediment control upstream. Aquatic macro-

invertebrate samples will be taken in conjunction with the sediment samples in the spring, summer and fall of each year as required by effects of surface disturbance activities.

James Canyon Creek. Cutthroat trout have been observed in high numbers in James Canyon Creek during their spring spawning time. James Canyon Creek is an important part of the fisheries resource of Electric Lake. The stream will probably not be impacted by the Belina Project. If the Creek is impacted then a monitoring and protection plan will be initiated.

Slaughterhouse, Boardinghouse, Finn, Whiskey Gulch, Long, and Mud Creeks. These streams are all intermittent, at least during low precipitation years. As such they are not considered as important parts of the fishery resources of Pleasant Valley Creek or Scofield Reservoir (personal communication, Mr. John Livesay, UDWR, Price Office, 7 November 1979). Since they will not be directly impacted by the Belina Project, a monitoring or protection will not be necessary.

Avifauna and Raptor Plan

Ornithological investigations have been accomplished over several time periods in the Scofield -- Skyline -- Valley Camp coal mining region. Specifically, these periods have been: December 1, April 7 - 8, April 25 - 26, May 17 - 18, June 13 - 14, and July 26 - 29. During these periods a record has been maintained on (1) threatened or endangered species, (2) raptors seen and nests located, (3) occurrences of species of high Federal interest and (4) migratory birds in general. The obvious time period where observations are missing are during the major autumn migration periods September - October. This may represent a critical block of time. For example, the peak of raptor migration, as seen along the Wasatch Front 60 miles north of Scofield, revealed a total of 308 migration raptors recorded between September 9 and October 4 with the peak seemingly around mid to late September (Mosher, et al. 1978). Prior to the drawing of any final conclusions, that autumn time period will be examined.

No portion of the mine plan area has shown evidence of being inhibited by the endangered northern bald eagle which occurs in the Scofield area during the migration season between November 15 and March 15 each year. Currently no roost trees are known and no bald eagles nest in Utah. Two active

nests were found in Eccles Canyon, one of the Goshawk and the other one of the Cooper's Hawk (White, 1980). The Cooper's Hawk is also a species of high federal interest. These two species can generally tolerate considerable human impact. The Golden eagle, also of high federal interest, has been seen in the mine plan area, but no nests were found.

In order to minimize disturbance to the bald eagle and other endangered or important species all mine personnel and other persons normally associated with the mine operation will be made aware of the birds' annual presence and value to society. These persons will also be instructed not to disturb, harass or kill bald eagles or other endangered or important raptors. If a roost tree(s) for bald eagles or other raptors of importance is located by mining personnel or other interested persons it will be immediately reported to the Utah Division of Wildlife Resources and the U.S. Fish and Wildlife Service. Roost trees and a suitable buffer zone will be protected from human disturbance during the winter period.

Design and construction of all electric power lines and other transmission facilities shall be designed in accordance with guidelines set forth in "Environmental Criteria for Electric Transmission System" published by the USDI and USDA in 1970 and/or the REA Bulletin 61-10 "Powerline Contacts by Eagles and Other Large Birds".

High Interest Wildlife and Their High Value Habitats

Mule deer and elk inhibit high priority and crucial-critical winter ranges between November 1 and May 15 each year. These areas shall be protected from exploration activities during the periods when inhibited. Disturbances on high-priority deer winter range shall be kept to a minimum.

Big game on winter ranges are sensitive to disturbances. Therefore, all mine personnel and other persons normally associatd with the mine operation will be instructed on the annual presence and value to society of this big game. Efforts will be made to avoid any unnecessary disturbance by man.

If the mining operation should install structures which present barriers to wildlife daily movements, then suitable passage structures will be installed.

All hazards associated with the mine operation shall be fenced or covered to preclude use by wildlife.

WILDLIFE PROTECTION PLAN

1. All roads under the applicant's control, and within the mine plan area, will have posted speed limits.

2. The access road along Whiskey Canyon will be posted with warning signs indicating animal crossing areas.

3. Design and construction of power transmission and distribution lines will be in accordance with guidelines set forth in "Environmental Criteria for Electric Transmission System" (USDI, USDA [1970]) and REA Bulletin 61-10 "Powerline Contacts by Eagles and Other Large Birds."

4. Consideration of possible restriction of animal movement (passage) will be incorporated into the design and installation of all structures within the mine permit area.

5. All hazards associated with the mine operation will be fenced or covered to preclude use by wildlife.

6. Disturbances to big game on high priority winter range will be kept to a minimum.

7. All riparian habitat disturbed by the applicant during mining activities (none anticipated) will be reclaimed to pre-mining status.

8. Should the applicant become aware of the presence of any threatened or endangered plant or animal within the mine permit area, such presence will be reported to the appropriate regulatory authority.

9. Adequate precautions will be taken to keep coal from being inadvertently deposited along or within stream channels.

10. Mine personnel and other persons associated with mining operations will be informed of the values of the wildlife resource associated with the mining project and adjacent area.

11. All mine personnel will be instructed through annual educational training programs emphasizing the importance of fish and wildlife protection, aquatic resources, avifauna and raptors, and, in general, avoidance of activities harmful to wildlife resources of the area. The educational program will be coordinated with the Division of Wildlife Resources.

784.22 DIVERSIONS

No diversions of established waterways are planned for the Valley Camp permit area. Some general drainage diversion is planned around the underground development waste disposal. This is fully addressed in Section 784.19.

784.23 OPERATION PLAN: MAPS AND PLANS

The underground mining activities to be conducted by Valley Camp as well as the lands to be affected throughout the mining operation can be seen on the Area over Underground Works Map, Map C-5, Volume IV. The layout of Valley Camp's existing facilities as well as their proposed conveyor route can be seen on the Operations Map, Map C, Volume IV. The haulroad is shown on the Operations Map, Map C, and can be seen in profile and cross section on Map C-1 and C-2, respectively in Volume IV.

The existing buildings, utility corridors, and facilities to be used by Valley Camp are shown on the Plan Map - Loadout Area, Map C-3, Volume IV and Plan Map - Portal Area, Map C-4, Volume IV for the loadout and portal areas respectively.

The proposed conveyor system to be installed and used by Valley Camp is shown both in plan and profile on Overland Conveyor, Maps, M-1 through M-7, Volume IV.

The land to be affected according to the timing and sequence of mining can be seen on the Areas over Underground Works Map, Map C-5, Volume IV.

Each area of land for which a performance bond or other equivalent guarantee will be posted is shown on the Reclamation Map, Map D, Volume IV.

Each coal storage, cleaning and loading area is shown on the Plan Maps for the Loadout and Portal Areas, Map C-3 and C-4 respectively, Volume IV.

The location of the topsoil pile at the Belina site is shown on the Operations Map, Map C, Volume IV. The location of the underground development waste can be seen on the Plan Map - Portal Area, Map C-4, Volume IV and in detail on the Underground Waste Development Map, Map L, Volume IV.

Each water monitoring collection point to be used by Valley Camp to protect the fish and wildlife environment can be seen on the Hydrology Map, Map F, Volume IV. The locations

of the sediment ponds to be used by Valley Camp can be seen on the Plan Maps for the Loadout and Portal Areas, Map C-3 and C-4 respectively, Volume IV.

The profile cross sections denoting the final surface configuration to be achieved for the affected areas are shown in Plan and Cross Section on Reclamation Maps D-1, D-2, D-3, D-4, and D-5 in Volume IV.

The location of each water monitoring station is shown on the Hydrology Map, Map F, Volume IV. The location of each subsidence control point is shown on the Subsidence Control Map, Map K, Volume IV.

The only structures to remain on the proposed permit area after the completion of mining are the access roads to the Belina and loadout areas and the entire general office-warehouse complex. These structures can be seen on the Reclamation Map, Map D, Volume IV.

Maps, plans, and cross sections required under Paragraphs (b), (5), (6), (10), and (11) of the permanent regulations have been prepared by or under the direction of and certified by a qualified professional engineer. The maps, plans, and cross sections for sedimentation ponds and underground waste were prepared by a qualified registered professional engineer.

UMC784.24 TRANSPORTATION FACILITIES

The roads associated with the Belina No. 1 and No. 2 Mines are shown on Maps C, C-3, and C-6. The proposed conveyor shown on Map C is in a preliminary design stage and will not be constructed during this five year term of permit.

The access road up Whisky Canyon is described in detail on Map T-1. The road is 1.8 miles long, has an average grade of 8.3 percent, and a paved width of 24 feet. Paving was completed in September, 1983. The previous status of the road was described in the Compliance Survey prepared by Vaughn Hansen Associates in 1978. A geotechnical report addressing the stability of the steep slopes is available as Appendix L.

The ancillary roads (the access road to the office and warehouse, and the haul road at Utah No. 2) are constructed as follows:

Office/Warehouse Road
-Minimum width of 24 feet
-Maximum grade of 2 percent
-Base course of 8 inches of minus 2 inch rock
-Surface course of 4 inches of minus 3/4 inch rock
-Bituminous asphalt of 3 inches

Utah No. 2 Haul Road
-Minimum width of 24 feet
-Maximum grade of 10 percent
-Base course of 8 inches of minus 2 inch rock
-Surface course of 4 inches of minus 3/4 inch rock
-Bituminous asphalt of 4 inches

Typical cross-sections of the office and Utah No. 2 roads are shown on Figure 3-32 (Rev. 1). The access road to the office (0.25 miles) and the haul road at Utah No. 2 load-out (0.33 miles), were paved in July of 1986. The locations of the two roads is shown on Map D4-0085, Vol IV.

784.24 TRANSPORTATION FACILITIES

The roads to be used and maintained within the mine plan area are shown on the Operations Map, Map C, Volume IV. Cross sections and profile of the haul road are shown on Maps C-1 and C-2, Volume IV.

The proposed conveyor system to be constructed as well as the proposed access roads to its transfer points within the mine permit area are shown on the Operations Map, Map C, Volume IV. The conveyor system is shown in plan and profile on Maps M-1 through M-7, Volume IV.

Specifications for transportation facilities are determined by the fugitive dust control plan as specified in Section 784.26. No alteration or relocation of natural drainageways are planned.

784.25 RETURN OF COAL PROCESSING WASTE TO ABANDONED UNDERGROUND WORKINGS.

There are no coal processing wastes associated with the Valley Camp of Utah, Inc. mining operations.

784.26 AIR POLLUTION CONTROL PLAN

The air pollution control plan at Valley Camp, Inc. has been approved by the State of Utah, Bureau of Air Quality, letter of May 23, 1975, and May 7, 1980. The U.S.E.P.A. (May 29, 1980 Ref. 8AH-A) has determined that the source (Valley Camp, Inc. Mines and Preparation Plant Area) does not require a P.S.D. permit. Therefore, no air quality monitoring plan is proposed by the permittee.

The plan for fugitive dust control practices is as follows:

1. Conveyor hood sections will be securely positioned when transporting coal and will be maintained in good condition.
2. Conveyor head chutes, reclaim tunnel feeder chutes, and vibrator feeder discharge chutes will be totally enclosed and will be maintained in good condition.
3. Conveyor skirt boards will be properly positioned when transporting coal and replaced as needed.
4. Stacker tube dust flaps will be replaced as needed.
5. Paving of 2.2 miles of Eccles Canyon haul road is anticipated and being discussed with county, state and other road users. (Carbon County, Utah State Dept. of Transportation and Coastal States Energy Company).

6. Unpaved sections of haul roads will be surface treated and retreated as necessary with a dust suppressive material. A record of the treating done (days and amounts) will be maintained.

BIBLIOGRAPHY

Bentley, R. G., Jr., K. O. Eggleston, D. Price, E. R. Frandsen, and A. R. Dickerman. 1978. The Effects of Surface Distrubance on the Salinity of Public Lands in the Upper Colorado River Basin - 1977 Status Report. U. S. Bureau of Land Management. Denver, Colorado.

Dunrud, C. R., Some Engineering Geologic Factors Controlling Coal Mine Subsidence in Utah and Colorado, 1976, USGS Professional paper 969

Golder Associates, Surface Facilities Grading Plan for Belina Mine Area, June 1980, Prepared for Valley Camp of Utah, Inc.

Grey, D. M., 1973. Handbook on the Principals of Hydrology, Water Inforamtion Center, Port Washington, NY p. 8.5.

Handbook of Steel Drainage and Highway Construction Products, 1971. American Iron and Steel Institute, New York, NY p. 152-175.

Hansen, V. E. 1979. Mines Prevent Deterioration in Water Quality. Paper presented at the American Water Resources Association Symposium: Water Resource Management in a Changing Society. Las Vegas, Nevada.

Hansen, Vaughn, Hydrologic Inventory and Baseline Study of the Valley Camp Lease Area, January 1980, prepared for Valley Camp of Utah, Inc.

Kent. K. M., 1972. National Engineering Handbook. Section 4: Hydrology. Soil Conservation Service. U.S. Government Printing Office, Washington, D. C., p 15-8.

Mosher, et al. 1978.

Price, D., and T. Arnow. 1974. Summary Appraisals of the Nation's Groundwater Resources - Upper Colorado Region. U. S. Geological Survey Professional Paper 813-C. Washington, D.C.

Richardson, E. A., 1971. Estimated Return Periods for Short-Duration Precipitation in Utah. Department of Soils and Biometerology Bulletin No. 1. Utah State University, Logan, Utah.

Skelly and Loy, A Compliance Manual: Methods for Meeting OSM Requirements, 1979, McGraw Hill, Inc. New York, NY

Southeastern Utah Association of Governments, 1979, Waste Water Quality Management Planning Program (208) for Emery, Carbon, and Grand Counties, Utah. Price, Utah.

U. S. Geological Survey, 1979. Development of Coal Resources in Central Utah - Final Environmental Statement. Salt Lake City, Utah.

Utah Division of Wildlife Resources, 1979

Vaughn Hansen Associates, 1978. Office of Surface Mining Reclamation and Enforcement Compliance Survey in the Clear Creek, Utah Area, Report prepared for Valley Camp of Utah, Inc., Helper, Utah.

Welsh, S. L., L. Juarros, J. R. Murdock, and E. Neese. 1980. Report of Vegetation, Plant Community Analysis, Threatened and Endangered Plant Species, Soils, and Reclamation Plans for Valley Camp of Utah, Inc., Lease Area, and Proposed Conveyor Corridor, Carbon-Emery Counties, Utah. Endangered Plant Studies, Inc., Orem, Utah.

White, C. M., 1980. A report on "The Avifauna and Raptors of the Area of Valley Camp of Utah, Inc." submitted to Vaughn Hansen Associates for the Valley Camp Project.

Winget, R. N. 1980. Aquatic Ecology of Surface Waters Associated with the Belina Mine Project including General Aquatic Resource Descriptions and Proposed Aquatic Monitoring Program.

APPENDIX A

DETAILED COST ESTIMATE

FOR RECLAMATION PLAN

16 February 1983

ESTIMATED RECLAMATION COST
(1980 DOLLARS)

Belina Mines Area

A.	Portal Reclamation		$25,200.00
	No. 1 Mine - 5 Portals, each 12' x 20'		
	Backfilling = 120 yds. ea. @ $3.50 per yd.	$2,100.00	
	Sealing = 6,000 blocks @ $.90 ea.	5,400.00	
	Man Days = 60 @ $100.00 per day	6,000.00	
	Subtotal	$13,500.00	
	No. 2 Mine - 4 Portals, Each 12' x 20'		
	Backfilling = 120 yds. ea. @ $3.50 per yd.	$1,680.00	
	Sealing = 5,800 blocks @ $.90 ea.	5,220.00	
	Man Days = 48 @ $100.00 per day	4,800.00	
	Subtotal	$11,700.00	
B.	Concrete Structure Removal Cost		$ 6,630.00
	Belina No. 1 Fanhouse 20' x 50' x 14'		
	Belina No. 2 Fanhouse 20' x 50' x 14'		
	Pumphouse 20' x 20' x 10'		
	Bathhouse 80' x 160' x 15'		
	Sewer Building 30' x 50' x 15'		
	No. 2 MCC Building 20' x 20' x 4'		
	Shop Building 40' x 40'		
	Substation Pads 2 @ 30' x 30'		
	Coal Transfer Building 20' x 20' x 4'		
	Portals 9 @ 20 yds. each		
	Total yardage of flat material 884 cu. yds. @ $4.50 per	$3,978.00	
	Total yardage of wall material 663 cu. yds. @ $4.00 per	2,652.00	
	Total Cost of Concrete Structure Removal	$6,630.00	
C.	Steel Building Removal Cost		$30,500.00
	Belina Shop 40' x 40' x 25'	$6,000.00	
	Coal Transfer Building 20' x 20' x 50'	3,000.00	
	Truck Loadout Bin	4,800.00	
	Loadout Control 20' x 20' x 30'	4,000.00	
	Bathhouse (roof) 80' x 160'	7,500.00	
	Stacking Silo	5,200.00	
D.	Conveyor Structure Removal Cost		$22,000.00
	Steel Structure	$12,000.00	
	Conveyor Foundations	2,000.00	
	Transportation	8,000.00	

E.	Miscellaneous Cost		$64,200.00
	Equipment Removal	$30,000.00	
	Drainage Pipe Removal	1,500.00	
	Tank Removal	8,000.00	
	Power Line Removal	5,000.00	
	Guardrail Removal	2,500.00	
	Sub-Station Removal	10,000.00	
	Water Line Removal	3,000.00	
	Loadout Tunnel Fan	200.00	
	General Refuse Removal	4,000.00	
F.	Parking Areas and Roads Cost		$ 2,000.00
	Scarifying	$2,000.00	
	Removal Abandonment (A-F) Subtotal	$150,530.00	

G. Grading — $36,050.00

1. Belina No. 1 — $16,640.00
   - 12,200 yards to move
   - 500 foot push/haul distance - 2 dozers, 2 loaders
   - 153 yards per operating hour
   - 80 total operating hours for dozers, @ $120.00/hr. with operator.
   - 80 total operating hours for loaders, @ $88.00/hr. with operator.

   Belina No. 2 — $13,520.00
   - 8,600 yards to move
   - 500 foot push/haul distance-2 dozers, 2 loaders
   - 132 yards per operating hour
   - 65 total operating hours for dozers, @ $120.00/hr. with operator.
   - 65 total operating hours for loaders, @ $88.00/hr. with operator.

2. Coal Storage Areas — $ 3,640.00
   a. Portal Area
      - 860 yards to move @ 1.2 tons/yd., 28% swell
      - 600 foot push/haul distance-2 trucks, 1 loader, 2 dozers.
      - 16.0 total operating hours for trucks @ $65.00 per hour with operator.
      - 8.0 total operating hours for loader @ $85.00 per hour with operator.
      - 16.0 total operating hours for dozers @ $120.00 per hour with operator.

   b. Truck Bin & Clean Coal Stockpile — $ 2,250.00
      - 800 yards to move @ 1.2 tons/yd., 28% swell
      - 300 foot push/haul distance-2 trucks, 1 loader, 2 dozers.
      - 12.0 total operating hours for trucks @$65.00 per hour with operator.

6.0 total operating hours for loader @ $85.00 per hour with operator.
8.0 total operating hours for dozer @ $120.00 per hour with operator.

H. Revegetation Cost $38,208.00

1. Handseeding	AC.	Unit/Cost	Item Cost
Flat/slight slope areas	4.0	$103.00	$ 412.00
North Facing Slopes	3.0	$113.00	$ 339.00
plus 1100 shrubs & trees		0.75	$ 825.00
South Facing slopes	3.0	$108.00	$ 324.00
Riparian areas	2.0	$108.00	$ 216.00
plus 500 shrubs & trees		0.75	$ 375.00
	12.0 AC		$2,491.00

2. Hydroseeding			
Flat/slight slope areas	8.9	$700.00	$6,230.00
North Facing slopes	14.0	$700.00	$9,800.00
South Facing slopes	13.0	$700.00	$9,100.00
Steep roadcuts	3.0	$700.00	$2,100.00
plus 250 shrubs & trees		$ 0.75	$ 187.00
	38.9AC		$27,417.00

3. Total Mulching Cost $5,000.00
12.5 acres @ $400.00/AC.

4. Total Labor Cost $3,300.00
33 man days @ $100.00/man day

I. Additional costs may be encountered for additional fertilizer and moisture retention components. Such costs should be covered under the estimated contingency provided.

J. Topsoil Cost $63,000.00
30 acres @ $2,100.00/AC

K. Total Reclamation Cost - Belina Complex

Estimated	$287,788.00
10% Contingency	28,779.00
Total Estimate	$316,567.00

Utah No. 2 - Loadout Area

A.	Portals		$9,982.00
	7 portals @ 10' x 18' ea.		
	Backfilling = 100 yds. ea. @ $3.50 per yd.	$1,400.00	
	Sealing = 4,536 blocks @ $.90 per	4,082.00	
	Man Days = 45 @ $100.00/day	4,500.00	
		$9,982.00	
B.	Concrete Structure Removal Cost		$3,008.00
	Fanhouse 20' x 30' x 12'		
	Storage Shed 14' x 30'		
	Crusher Building 44' x 20' x 2'		
	Stacking Tube 13.5'x 73'		
	Liquid Storage 20' x 20'		
	Loadout Footers		
	Substation pads 2 @ 12' x 20'		
	Shop 40' x 60'		
	MCC 8' x 10'		
	Truck Dump		
	Portals		
	Total yardage of flat material - 456 yds.^{3} @ $4.50 per	$2,052.00	
	Total yardage of wall material - 239 yds.^{3} @ $4.00 per	$ 956.00	
		$3,008.00	
C.	Steel Structure Removal Cost		$29,877.00
	Storage Shed 14' x 30' x 12'	$ 756.00	
	Shop 40' x 60' x 14'	5,040.00	
	Crusher 44' x 20' x 49'	6,468.00	
	Loadout 20' x 18' x 57'	3,078.00	
	Substation 2 @ 12' x 12' x 8'	3,225.00	
	Liquid Storage 20' x 20' x 8'	480.00	
	Truck Dump 20' x 43' x 15'	1,980.00	
	Bathhouse Trailers (2)	400.00	
	Water Tank	450.00	
	Transportation	8,000.00	
D.	Conveyor Structure Removal Cost		$8,500.00
	Steel Structure	$8,000.00	
	Foundations	500.00	
E.	Parking Areas and Road Cost		$2,500.00
	Scarifying	$2,500.00	
F.	Miscellaneous Cost		$38,100.00
	Equipment Removal	$6,000.00	
	Power Line Removal	3,200.00	
	Sub-Stations Removal	8,500.00	
	Tank Removal (4)	4,400.00	
	Guardrail Removal	700.00	

Water and Sewer Line Removal	1,000.00
Drainage Pipe Removal	8,000.00
Loadout Tunnel Fan	300.00
General Refuse Removal	6,000.00
Removal - Abandonment (A-F) Subtotal	$91,967.00

G. Grading Cost — $26,660.00

1. Utah No. 2 Portal Area — $8,710.00
   5,200 yds. to move @ 1.2 tons/yd.,28% swell
   300 foot push/haul distance-1 dozer, 2 trucks, 1 loader
   52 total operating hours for trucks, @ $65.00/hour with operator.
   26 total operating hours for loader, @ $85.00/hour with operator.
   26 total operating hours for dozer, @ $120.00/hour with operator.

2. Coal Storage Area — $17,950.00
   8,500 yards to move
   500 foot push/haul distance-1 dozer, 1 loader, 2 trucks
   60 total operating hours for dozer, @ $120.00/hour with operator.
   50 total operating hours for loader, @ $85.00/hour with operator.
   100 total operating hours for trucks, @ $65.00/hour with operator.

H. Revegetation Cost — $14,092.00

1. Handseeding	AC.	Unit/Cost	Item Cost
Flat/slight slope areas	19.3	$103.00	$1,988.00
North facing slopes	1.0	$113.00	$ 113.00
plus 100 shrubs & trees		0.75	$ 75.00
South facing slopes	2.0	$108.00	$ 216.00
Riparian areas	1.5	$108.00	$ 162.00
plus 250 shrubs & trees		0.75	$ 188.00
	23.8		$2,742.00

2. Hydroseeding			
Steep cuts/slopes	1.5	$700.00	$1,050.00
North facing slopes	1.0	$700.00	$ 700.00
	2.5		$1,750.00

3. Total Mulching Cost — $9,600.00
   24.0 acres @ $400.00/AC

I. Topsoil Cost — $33,600.00
   16.0 acres @ $2,100.00/AC

J. Total Reclamation Cost - Loadout Area

Estimated Cost	$166,319.00
10% Contingency	16,632.00
Total Estimate	$182,951.00

Mine Office Area

Steel Building Removal Cost Office-Warehouse Building 58' x 125' x 10'		$10,875.00
Concrete Structure Removal Cost Office Warehouse Building 58' x 125'		$ 1,000.00
Road and Parking Lot Removal		$ 9,300.00
Regrading (1.9 acres)	$1,700.00	
Topsoiling ($2,000.00/AC)	3,800.00	
Reseeding & Fertilization ($2,000.00/AC)	$3,800.00	
Miscellaneous Cost Remove Water Line Remove Sewer Line and Tank		$ 2,500.00

Total Office-Warehouse Reclamation Cost

Estimated Cost	$23,675.00
10% Contingency	2,367.00
Total Estimate	$26,042.00

APPENDIX B

RECOMMENDED RESEEDING MIXTURE

Recommended Reseeding Mixtures
(Welsh, 1980 Revised)

Native Species and Amounts. The species to be applied depend on the habitat and to exposure of the slope.

Flat/Slight Slope Areas (F/SSA)

Grasses (seed)

Scientific Name - Common Name	lbs/acre
Agropyron Dasystachyum-Thickspike Wheatgrass	3
Agropyron Spicatum-Blue Bunch Wheatgrass	3
Bromus Carinatus-Mountain Brome	3
Elymus Giaucus-Great Basin Wildrye	3
Poa Pratensis-Kentucky Bluegrass	2
TOTAL SEED	14

North Facing Slopes (NFS)

Grasses (seed)

Scientific Name - Common Name	lbs/acre
Agropyron Trachycaulum-Slender Wheatgrass	2
Bromus Carinatus-Mountain Brome	1
Carex Spp.-Sedge	1/8
Poa Pratensis-Kentucky Bluegrass	1 7/8
Stipa Comata-Needle and Threadgrass	1

Forbs (seed)

Scientific Name - Common Name	lbs/acre
Achillea Millefolium-Yarrow	1 1/2
Fragaria Virginiana-Wild Strawberry	1/2
Geranium Viscosissimum-Wild Geranium	1/2
Lathyrus Leucanthus-Aspen Peavine	1/2
Lupinus Alpestris-Mountain Lupine	1/2
Osmorhiza Chilensis-Sweetroot (Spreading)	1/2
Penstemon Eatoni-Eaton Penstemon	1
TOTAL SEED	11

Shrubs and Trees (Tublings)

Handset at 1 - 2.5 m intervals in selective areas

Chosen from the following:

Scientific Name - Common Name
Abies Canadensis-White Fir (2.5 m intervals)
Picea Englemannii-Engelmann Spruce (2.5 m intervals)
Picea Pungens-Blue Spruce (2.5 m intervals)
Symphoricarpos Oreophilus-Mountain Snowberry (1 m intervals)

South Facing Slopes (SFS)

Grasses (seed)

Scientific Name - Common Name	lbs/acre
Agropyron Spicatum-Blue Bunch Wheatgrass	3
Bromus Carinatus-Mountain Brome	3
Elymus Giaucus-Great Basin Wildrye	3
Poa Pratensis-Kentucky Bluegrass	2

Forbs (seed)

Scientific Name - Common Name	lbs/acre
Achillea Millefolium-Yarrow	1
Lupinus Alpestris-Mountain Lupine	1
TOTAL SEED	13

Raparian Habitat (RH)

Grasses (seed)

Scientific Name - Common Name	lbs/acre
Agropyron Smithii-Western Wheatgrass (on bank areas)	3
Agropyron Trachycaulum-Slender Wheatgrass (on terrace areas)	2
Bromus Carinatus-Mountain Brome (on terrace areas)	2
Carex Spp.-Sedge (on terrace areas and bank margins)	2
Poa Pratensis-Kentucky Bluegrass	2
TOTAL SEED	11

Trees and Shrubs

Handset at .5 - 1 m intervals in selected areas

Chosen from the following:

Scientific Name - Common Name
Mahonia Repens-Creeping Oregon Grape (3 m intervals) (bank areas)
Picea Pungens-Blue Spruce--Tublings (1 m intervals) (on terrace areas)
Rosa Woodii-Woods Rose--Tublings (.5 m intervals) (on bank areas)
Rubus Idaeus Sachalinenis-American Red Raspberry--Tublings (.5 m intervals) (on rip rap areas)
Salix Rigida-Yellow (Watson) Willow--(.5 m intervals) (on banks and rip rap areas)
Symphoricarpos Oreophilus-Mountain Snowberry (3 m intervals) (bank areas)

Steep Roadcut (SR)

Grasses (seed)

Scientific Name - Common Name	lbs/acre
Acropyron Trachycaulum-Slender Wheatgrass	3
Bromus Carinatus-Mountain Brome	3
Poa Pratensis-Kentucky Bluegrass	1
Stipa Comata-Needle and Threadgrass	2

Forbs (seed)

Scientific Name - Common Name	lbs/acre
Lupinus Alpestris-Mountain Lupine	1
Osmorhiza Chilensis-Sweetroot (spreading)	1
TOTAL SEED	11

Trees (Tublings)

Handset at 1 m intervals in selected areas

Chosen from the following:

Scientific Name - Common Name
Abies Concolor-White Fir
Picea Engelmannii-Engelmann Spruce
Picea Pungens-Blue Spruce

APPENDIX C

SUBSIDENCE CONTROL

MONITORING PROGRAM

SUBSIDENCE CONTROL

MONITORING PROGRAM

An ongoing subsidence monitoring program is being conducted consisting of annual field surveys and photogrammetric overflights, pursuant to the Cooperative Agreement between Valley Camp of Utah, Inc. and the U.S. Forest Service, attached hereto. An on-ground visual inspection will be made by Valley Camp or a consultant each year following the initial survey. This inspection, to be made normally in midsummer after the ground has dried, will deal with the condition of the ground surface and existing structures above all underground workings and their angle of draw. Attempts will be made to identify and document the presence of tension cracks, fissures, landslides, structural offsets, structural damage, etc. Photographs will be taken of the noted changes to assess impacts. Changes in the hydrologic condition of the area will be assessed through an on-going hydrologic monitoring program.

Annual overflights will be made of the area overlying underground workings plus the potential angle of draw. Monuments will be inspected each year prior to the flight to insure proper flagging. Flights will produce photographs at a scale of 1:4800 and follow the overlap guidelines outlined in the previous section. The photographs will not be topographically reduced unless subsidence is discovered. Only those areas where subsidence has occurred will be studied in further detail as an aid in establishing the magnitude of subsidence.

COOPERATIVE AGREEMENT

Between

VALLEY CAMP OF UTAH, INC.

and

Manti-LaSal National Forest
United States Department of Agriculture

THIS COOPERATIVE AGREEMENT, made and entered into by and between Valley Camp of Utah, Inc., hereinafter referred to as the COOPERATOR, and the Manti-Lasal National Forest, U.S. Department of Agriculture, hereinafter referred to as the FOREST SERVICE, under the provisions of the Granger--Thye Act of February 24, 1950 (16 U.S.C. 572).

WITNESSETH:

WHEREAS, the FOREST SERVICE has the responsibility as a surface management agency to insure mineral development with adequate protection of surface resources,

WHEREAS, the COOPERATOR is desirous to comply with the requirements for subsidence monitoring (30 CFR 211-700),

WHEREAS, it is to the mutual advantage of the parties hereto mentioned to cooperate in instigating and supporting a photogrammetric method of monitoring subsidence, more particularly prescribed in the attached plan, which is hereby made part of this agreement.

NOW THEREFORE, in consideration of the above premises, the parties hereto agree as follows:

A. THE COOPERATOR SHALL

1. Construct target monuments at designated locations over their lease area. One of these must be at or near the mine portal. These target monuments shall be in accordance with or superior to those shown on Attachment No. 1.

2. Determine the precise coordinates and elevation of each of these monuments--Utah Coordinate System should be used.

3. Flag all monuments, as shown on Attachment No. 1, each year prior to taking of the aerial photography.

4. Provide the FOREST SERVICE with copies of the survey data.

5. Upon presentation of a bill for collection, promptly deposit with the Forest Service, Five Thousand Dollars ($5,000.00) as an initial advance payment and before annual flights each year during the term hereof beginning in 1980, the estimated amount of Two Thousand Five Hundred Dollars ($2,500.00).

These amounts are estimated to cover the cost of conducting aerial photographic surveys of portions of the leasehold. These amounts include the cost of conducting the aerial survey, color and infrared photography, prints (digitizing photographs, producing contour maps, and/or ortho photographs, as needed), and related indirect costs.

6. Upon presentation of a Bill for Collection, reimburse the FOREST SERVICE within 30 days the actual cost of services in excess of advance deposits, each year during the term hereof.

B. THE FOREST SERVICE SHALL

1. Make aerial photographs of the lease area using methods that will produce usable and adequate photographic prints for measurement of subsidence.

2. Perform aerial triangulation (bridging).

3. Make point readings for subsidence monitoring (as necessary).

4. Provide to the COOPERATOR one set of black and white and one set of color prints (9" x 9"), with a 1:4800 scale following each flight.

5. Provide to the COOPERATOR copies of all subsidence monitoring point readings and other data determined (as may be required).

6. Deposit funds so collected in the cooperative work fund of the FOREST SERVICE.

7. Use the funds collected under A.5 and A.6 to cover the costs of conducting aerial surveys, color and (when required and agreed upon) infrared photography, prints, digitizing photographs, and producing contour maps and/or ortho photographs, as needed.

8. Assist, cooperate, and--in some areas-- conduct range analysis, timber surveys, and wildlife habitat studies on National Forest lands, as may be necessary, to determine the effects of undermining upon surface resources.

C. IT IS MUTUALLY AGREED AND UNDERSTOOD BY AND BETWEEN THE SAID PARTIES THAT

1. As data is collected, frequency and times of the surveys may be changed to accommodate identified needs.

2. The FOREST SERVICE will require continuance of programs until such time it is determined the program is no longer needed, but not to exceed five years following final closure of the mine. Special cases may exist which require this time period to extend beyond five years. Concurrence of all involved parties would then be required for extending this monitoring period.

3. This agreement will have no effect on provisions and clauses of any of the COOPERATOR'S Special Use Permit(s).

4. Upon request of the COOPERATOR, any unused or unobligated deposited funds for a given year will be refunded, and a statement of costs for the period provided. Otherwise, unused or unobligated funds will be applied to the following yearly billings(s).

5. Nothing herein shall be construed as obligating the FOREST SERVICE to expend, or as involving the United States in any contract or other obligation for the future payment of, money in excess of appropriations authorized by law and administratively allocated for this work.

6. No Member of or Delegate to Congress, or Resident Commissioner, shall be admitted to any share or part of this agreement, or to any benefit that may arise therefrom; but this provision shall be construed to extend to this agreement if made with a corporation for its general benefit.

7. This agreement may be amended as necessary by mutual consent of both parties, by the issuance of a written amendment, signed and dated by both parties.

IN WITNESS THEREOF, the parties hereto have executed this agreement as of the last date written below.

VALLEY CAMP OF UTAH, INC.

4/14/79
Date

By W. H. Haynes, Jr.
W. H. Haynes, Jr.
Its Vice President

USDA - FOREST SERVICE

9/25/79
Date

By Reed C Christensen
Forest Supervisor