0006

Document Information Form

Mine Number: C/007/001

File Name: Incoming

To: DOGM

From:

Person

Company White Oak Mining and Construction

Date Sent: 07/31/1998

Explanation:

Addendum to appendix 142.310

cc:

File in:
C/ 007/001, 1998, Incoming
Refer to:
- ☐ **Confidential**
- ☐ **Shelf**
- ☐ **Expandable**

Date _____ For additional information

WHITE OAK MINING AND CONSTRUCTION
JULY 28, 1998
ADDENDUM TO APPENDIX 742.310

RECEIVED
JUL 31 1998
DIV. OF OIL, GAS & MINING

File in:
☐ Confidential
☐ Shelf
☐ Expandable
Refer to Record No 0006 Date 7/31/98
In C/001/001, 1998, Incoming
For additional information

Appendix 742.310
White Oak Mining and Construction July 28, 1998

CULVERT C-23-24 REMOVAL

Runoff from culvert C-23-24 is causing erosion on the outslope of the Belina Haul Road despite the installation of a half-round culvert to transport the runoff to Eccles Creek. Refer to drawing R645-301-231.300 for the location of features discussed. The erosion will be mitigated by diverting the runoff from culvert C-23-24 into ditch D-21, an existing concrete swale adjacent to the Belina Haul Road.

The diversion will be accomplished by plugging the drop box leading to culvert C-23-24 with concrete or another stable material, thereby, allowing runoff to flow past the original drop box into ditch D-21. Following the diversion the culvert, half-round culvert, and previously placed erosion control blankets will be removed to allow for the repair of the slope. The slope will be repaired using heavy equipment when possible, the remainder of the repair will be done by hand. Once the slope has been backfilled and compacted the area will be seeded and covered with erosion control matting material. Siltation structures such as silt fence or strawbales will be placed at the bottom of the recontoured slope to control silt/erosion to the stream channel.

The seed mix will include the grasses and forbs as described in the reclamation section of the permit for North-east facing slopes of the upper and lower sections of the White Oak Haul Road.

The attached calculations verify that ditch D-21 will handle the additional runoff resulting from the elimination of culvert C-23-24. No modifications to ditch D-21 will be required.

Although, ditch D-21 can handle the increased runoff without modification, as an added precaution, a loose rock check dam will be installed at the edge of the disturbed area boundary (bottom of D-21) to reduce the runoff velocity and allow the drop out of sediment.

The loose rock check dam will be install by digging a shallow trench perpendicular to the channel to key in the check dam. The loose angular rock will be placed over the trench with outslopes at angle of repose or less to the desired height. The center of the dam will be shaped such that water passes through center and away from the potentially erodible banks. An example of the check dam is attached as Page 7 of the hydrologic calculations. The check dam will be built at the location shown on Plate R645-301-742.310.

ADDENDUM TO APPENDIX 742.310

HYDROLOGIC CALCULATIONS

LICENSED PROFESSIONAL ENGINEER
No. 168248
RICHARD B. WHITE
7/28/98
STATE OF UTAH

The purpose of these calculations is to demonstrate that the existing ditch (D-21) can handle the increased flow resulting from the removal of culvert C-23-24. A check dam at the disturbed area boundary will also be designed.

Existing conditions

D-21 is a shallow concrete lined swale adjacent to the Belina haul road from the closed culvert (C-23-24) to the point at which the haul road makes a sharp right turn to the Eccles Canyon Highway, at this point the concrete swale transitions to a riprapped lined channel for the rest of the way to Eccles Creek.

Approximate concrete lined swale dimensions

Depth ≈ 0.25'
BW = 0
SS ≈ 12:1

Approximate riprap channel dimensions

Depth = minimum of 3'
BW ≈ 1'
SS ≈ 1:1
D_{50} ≈ 12"

Concrete swale verification

Minimum slope = 5'/137' = 0.036 ft/ft
Max slope = 5'/50' = 0.1 ft/ft
} From map R614-301-527

Flow = 1.21 cfs From page 1 of 7 Haul Road Ditch Calculations Dist. Area Ditches, Appendix 742.310

max flow depth = 0.16' (pg 3)

max velocity = 5.86 fps (pg 2)

min freeboard = 0.25' − 0.16 = 0.09' ≈ 1.1"

This section can handle the design flow.

D-21 concrete swale section max slope
Worksheet for Triangular Channel

Project Description	
Project File	untitled.fm2
Worksheet	White Oak haul road ditch calc
Flow Element	Triangular Channel
Method	Manning's Formula
Solve For	Channel Depth

Input Data		
Mannings Coefficient	0.013	
Channel Slope	0.100000	ft/ft
Left Side Slope	12.000000	H : V
Right Side Slope	12.000000	H : V
Discharge	1.21	cfs

Results		
Depth	0.13	ft
Flow Area	0.21	ft^2
Wetted Perimeter	3.16	ft
Top Width	3.15	ft
Critical Depth	0.23	ft
Critical Slope	0.005093	ft/ft
Velocity	5.86	ft/s
Velocity Head	0.53	ft
Specific Energy	0.67	ft
Froude Number	4.04	
Flow is supercritical.		

D-21 concrete swale section min slope
Worksheet for Triangular Channel

Project Description	
Project File	untitled.fm2
Worksheet	White Oak haul road ditch calc
Flow Element	Triangular Channel
Method	Manning's Formula
Solve For	Channel Depth

Input Data		
Mannings Coefficient	0.013	
Channel Slope	0.036000	ft/ft
Left Side Slope	12.000000	H : V
Right Side Slope	12.000000	H : V
Discharge	1.21	cfs

Results		
Depth	0.16	ft
Flow Area	0.30	ft^2
Wetted Perimeter	3.82	ft
Top Width	3.81	ft
Critical Depth	0.23	ft
Critical Slope	0.005093	ft/ft
Velocity	4.00	ft/s
Velocity Head	0.25	ft
Specific Energy	0.41	ft
Froude Number	2.50	
Flow is supercritical.		

Riprap channel verification

minimum slope = 5/190 = 0.026 ft/ft from map R614-301-527

maximum slope ≈ 5'/8' = 0.625 ft/ft map of this section was not available a typical slope leading into Eccles Creek was used

Maximum flow velocity at transition from concrete swale to riprap channel = 5.86 fps (pg 1 of 2)

Riprap required at transition ≅ 6" (pg 10)

6" < 12" ∴ transition riprap is OK

Maximum flow depth = 0.37' (pg 6)

Maximum flow velocity = 7.13 fps (pg 5)

minimum freeboard = 3.0' − 0.37' = 2.63'

Riprap needed for maximum slope ≅ 9" (pg 10)

9" = 12" ∴ existing riprap is adequate

Check dam design

At the site of the check dam the channel configuration is as follows (located at the edge of the RAB in D-21)

BW = 4'
Sideslopes ≅ 1:1
Top width ≅ 16'
Depth = 5' 9"

The rock used to construct the check dam will be the same as in the channel with an approximate D_{50} of 12". This design will determine the dimension of the spillway in the check dam and demonstrate that the check dam will be stable.

Assume a minimum slope of 1% and a maximum slope of 1.5:1 (angle of repose) for the spillway

1.5:1 ⇒ slope = 66.7 %

D-21 riprap channel section min slope
Worksheet for Trapezoidal Channel

Project Description	
Project File	untitled.fm2
Worksheet	White Oak riprap channel calcs
Flow Element	Trapezoidal Channel
Method	Manning's Formula
Solve For	Channel Depth

Input Data		
Mannings Coefficient	0.040	
Channel Slope	0.026000	ft/ft
Left Side Slope	1.000000	H : V
Right Side Slope	1.000000	H : V
Bottom Width	1.00	ft
Discharge	1.21	cfs

Results		
Depth	0.37	ft
Flow Area	0.51	ft²
Wetted Perimeter	2.05	ft
Top Width	1.74	ft
Critical Depth	0.32	ft
Critical Slope	0.043655	ft/ft
Velocity	2.39	ft/s
Velocity Head	0.09	ft
Specific Energy	0.46	ft
Froude Number	0.78	
Flow is subcritical.		

D-21 riprap channel max slope
Worksheet for Trapezoidal Channel

Project Description	
Project File	untitled.fm2
Worksheet	White Oak riprap channel calcs
Flow Element	Trapezoidal Channel
Method	Manning's Formula
Solve For	Channel Depth

Input Data		
Mannings Coefficient	0.040	
Channel Slope	0.625000	ft/ft
Left Side Slope	1.000000	H : V
Right Side Slope	1.000000	H : V
Bottom Width	1.00	ft
Discharge	1.21	cfs

Results		
Depth	0.15	ft
Flow Area	0.17	ft^2
Wetted Perimeter	1.42	ft
Top Width	1.30	ft
Critical Depth	0.32	ft
Critical Slope	0.044773	ft/ft
Velocity	7.13	ft/s
Velocity Head	0.79	ft
Specific Energy	0.94	ft
Froude Number	3.47	
Flow is supercritical.		

Check dam design (cont)

Spillway dimensions

BW = 10'
SS = 2:1
Depth = 1'

maximum flow depth = 0.13' (see pg 8)

maximum flow velocity = 3.31' (see pg 9)

Required riprap D_{50} = 3" < 12" ok (pg 10)

minimum freeboard = 1' − 0.13' = 0.87' ok

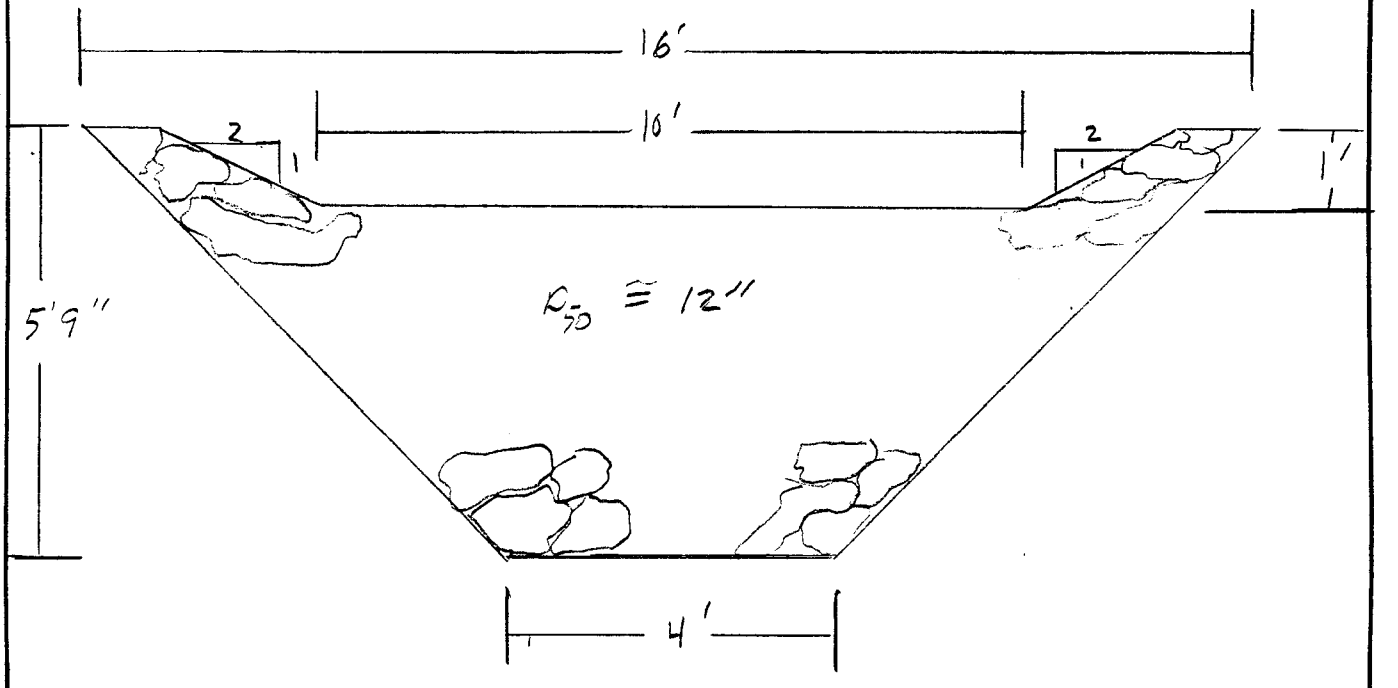

Not to scale.

Check dam spillway minimun slope
Worksheet for Trapezoidal Channel

Project Description	
Project File	untitled.fm2
Worksheet	Check dam in D-21
Flow Element	Trapezoidal Channel
Method	Manning's Formula
Solve For	Channel Depth

Input Data		
Mannings Coefficient	0.040	
Channel Slope	0.010000	ft/ft
Left Side Slope	2.000000	H : V
Right Side Slope	2.000000	H : V
Bottom Width	10.00	ft
Discharge	1.21	cfs

Results		
Depth	0.13	ft < 1.0' ok
Flow Area	1.31	ft²
Wetted Perimeter	10.57	ft
Top Width	10.51	ft
Critical Depth	0.08	ft
Critical Slope	0.055437	ft/ft
Velocity	0.92	ft/s
Velocity Head	0.01	ft
Specific Energy	0.14	ft
Froude Number	0.46	
Flow is subcritical.		

Check dam spillway maximum slope
Worksheet for Trapezoidal Channel

Project Description	
Project File	untitled.fm2
Worksheet	Check dam in D-21
Flow Element	Trapezoidal Channel
Method	Manning's Formula
Solve For	Channel Depth

Input Data		
Mannings Coefficient	0.040	
Channel Slope	0.670000	ft/ft
Left Side Slope	2.000000	H : V
Right Side Slope	2.000000	H : V
Bottom Width	10.00	ft
Discharge	1.21	cfs

Results		
Depth	0.04	ft
Flow Area	0.37	ft^2
Wetted Perimeter	10.16	ft
Top Width	10.15	ft
Critical Depth	0.08	ft
Critical Slope	0.055441	ft/ft
Velocity	3.31	ft/s
Velocity Head	0.17	ft
Specific Energy	0.21	ft
Froude Number	3.08	
Flow is supercritical.		

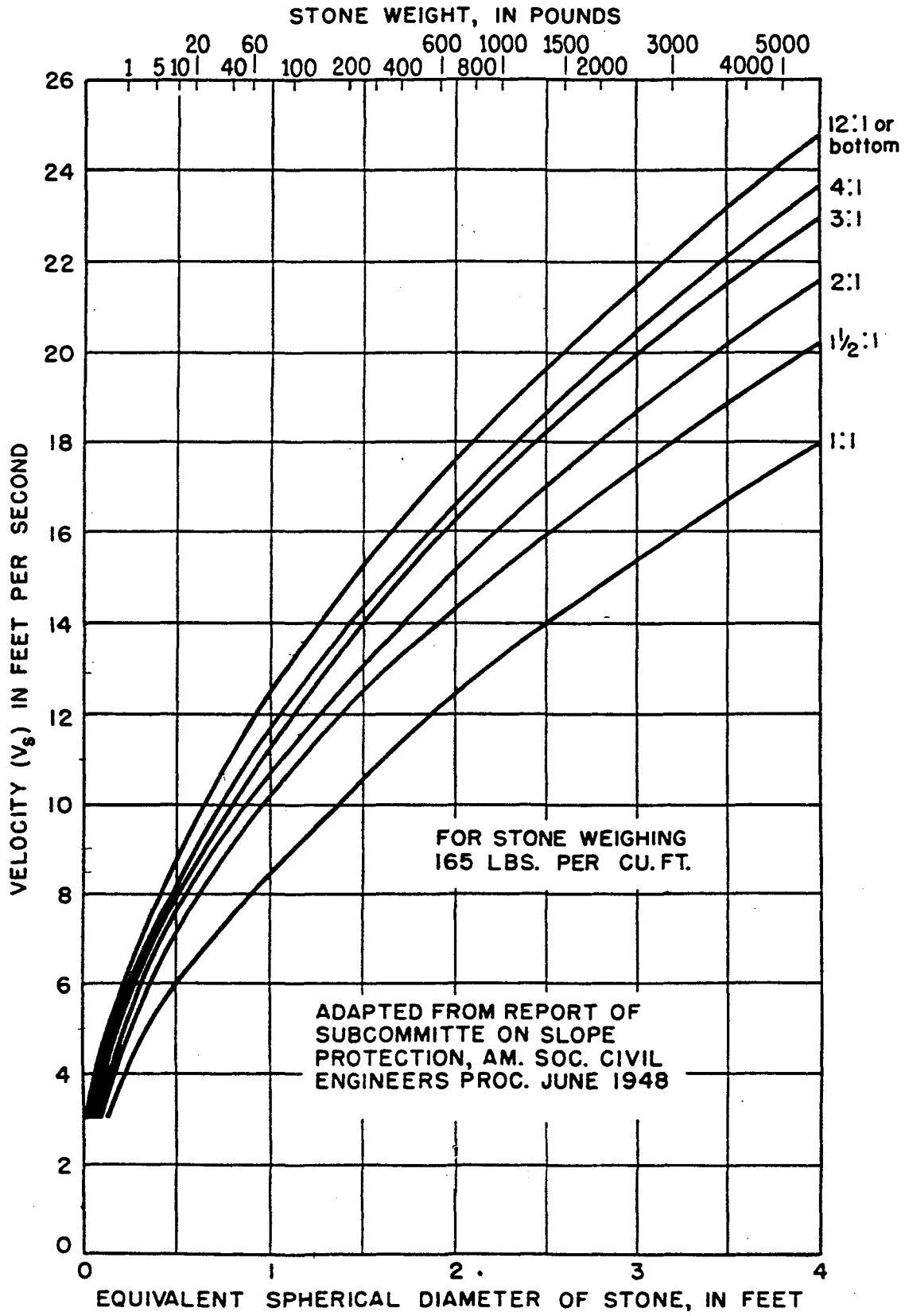

FIG. 2-SIZE OF STONE THAT WILL RESIST DISPLACEMENT FOR VARIOUS VELOCITIES AND SIDE SLOPES

Searcy, J.K. 1967. Use of Riprap for Bank Protection. U.S. Dept. of Transportation, Bureau of Public Roads, U.S Government Printing Office, Washington D.C.