0025

PRICE RIVER COAL COMPANY

P.O. BOX 629 HELPER, UTAH 84526 (801) 472-3411

August 8, 1983

ACT/007/004 #2

CERTIFIED RECEIPT REQUESTED
Certified No. 562077

Mr. Tom Tetting, Engineering Geologist
Division of Oil, Gas, and Mining
4241 State Office Building
Salt Lake City, Utah 84114

Re: Price River Coal ACR Concerns

Dear Tom:

Enclosed is a copy of the latest PRCC responses to continuing OSM requests.

Sincerely,

PRICE RIVER COAL COMPANY

R. L. Wiley

R. L. Wiley
Environmental Engineer

RLW:jp

Enclosure

cc: K. Hutchinson

RECEIVED
AUG 10 1983
DIVISION OF
OIL, GAS & MINING

RECEIVED
AUG 10 1983
DIVISION OF
OIL, GAS & MINING

Surface Water Hydrology

Culvert design data for the road section located below the facilities area in Sowbelly Canyon must be supplied. Data was supplied for the culverts in the canyon, however, two of the culverts were not located on a plan view map. It may be that the culverts not located are the culverts that exist below the facilities area. If so, then the location of the culverts must be identified on a map.

As per phone discussion with Connie Kimball on 7-19-83, the two culverts are shown on Exhibit 3.2-1B.

The design of the bridges in Hardscrabble Canyon must be provided to determine if they comply with the permanent performance standards.

This point was clarified by C. Kimball (7-19-83) to be a concern related to hydrology, i.e. is the bridge height and span sufficient to preclude a constriction to channel flow? The answer is yes. The minimum underbridge cross-sectional area is about 60 $ft.^2$.

A little descriptive information may be helpful. All bridges are simple spans, primarily of wood, that have been in place for 20-50 years.

The upper bridge sits on concrete abutments and appears to have been more recently braced with steel "I" beam girders. The span is about 15 feet, the channel depth about 8 feet and the channel bottom width about 10 feet.

The middle bridge is a 12 foot wooden span resting on uncemented rock abutments. The channel depth is about 4 feet and the width is 15 feet.

The lower bridge, also entirely wooden, spans 20 feet. The west abutment is of uncemented rock, the east concrete. Channel depth and width are both about 8 feet.

Specifications for ditch D-9, the diversion around Gravel Canyon, have not been provided on Table 3.4E. If the specifications are the same as those noted in Chapter 8, a statement to that effect should be provided. Also the applicant should provide a statement that the area as shown in Exhibit 3.4-2 is the average as-built cross-sectional area.

Sorry . . . this was somehow overlooked. An amended Table 3.4(E) is attached.

The ditch cross-sectional areas shown are close to the average for the entire ditch.

The calculations in Chapter 8, Appendix 8A, pp. 3-4, are to indicate minimum needed ditch capacity and sizing. The "as-built" is larger since it is difficult to build a small ditch with a large (D-8) tractor.

TABLE 3.4(E)

DRAINAGE CONTROL FEATURES IN Castle Gate/Utah Fuel:

DIVERSIONS [See Exhibits: 3.4-1, 3.4-2]

Assigned No.	Cross Section Area (ft.^{2})	Overall Slope (ft./ft)	Peak Flow Capacity (CFS)	Drainage Area (acres) & No.*	10 yr., 24-hr. Storm Peak Flow (CFS)
D-1	31.5	0.08	541	4; CG-8	4
D-2	682	0.06	37,373	1,238; CG-9A 9B	786
D-3	9.5	0.06	93	8.4; CG-7	8.5
D-4	10	0.10	124	6.4; CG-6	7
D-5	156	0.02	2,840	188.2; CG-9B	294 (100 yr.stm)
D-6	10	0.16	157	5.7; CG-10	5.7
D-7	12	0.09	143	56; Part CG-4	65.4
D-8	21	0.12	363	27; CG-3	27
D-9	18	0.10	290	9; Part CG-2	2

* See Exhibit 7-1

On plans drawn on 11/9/82 and approved on 12/8/82, drawing number B1-100 entitled Barn Canyon Drainage Diversion for areas CG6 and CT7, inlet and discharge structures are shown. Are these structures still in existence? If so, they should be located on a plan view map.

These sturctures are shown on the plan of the Castle Gate area, Exhibit 3.4-1. This matter was clarified and I believe satisfied during the phone conversation with C. Kimball on 7-19-83.

NPDES permits have been acquired by Price River Coal Company for Mine 3 in Hardscrabble Canyon and for the old Peerless Mine. What controls or treatment, if any, will be applied to these discharges?

We have a discharge permit for the new Peerless Mine (circa 1926). To date we have never needed to use it. We maintain it (the permit) only as a contingency, should water build up in the New Peerless Mine threaten active workings. We will not be in a position to worry about New Peerless for at least 10 years. Should we need to pump it out we will be required to pipe it to a point below all water plant intakes and limit quantities to that amount that will maintain less than 1 ton per day TDS discharge into Price River (as well as meeting other effluent limitations).

The discharge from No. 3 Mine (point 020) has no treatment system and requires none so long as effluent limitations are met. Monitoring since this discharge began has indicated that effluent limitations have been sustained (copies attached).

The parameters utilized in the Manning Equation for pre- and post- mining ditch sizing must be provided to facilitate the evaluation of ditch adequacy These parameters include depth, side slopes, bottom width and hydraulic radius.

For your reference copies of our calculation work sheets are attached. They are in rough condition but, I think, readable. They are not meant for publication.

We've also included a copy of Table 7-5 and the S.C.S. table used to derive the roughness factor based on hydraulic radius.

PERMITTEE NAME/ADDRESS (Include Facility Name/Location if different)

NAME: PRICE RIVER COAL COMPANY

ADDRESS: P. O. Box 629
Helper, UT 84526

FACILITY: MXXXXXXXXXXXXXXXXXXXX No. 3 Mine

LOCATION:

NATIONAL POLLUTANT DISCHARGE ELIMINATION SYSTEM (NPDES)

DISCHARGE MONITORING REPORT (DMR)

OMB No. 2000-0015

(2-16) PERMIT NUMBER	(17-19) DISCHARGE NUMBER
UT-0023086	020

MONITORING PERIOD

	YEAR	MO	DAY		YEAR	MO	DAY
FROM	83 (20-21)	1 (22-23)	1 (24-25)	TO	83 (26-27)	3 (28-29)	31 (30-31)

NOTE: Read instructions before completing this form.

PARAMETER (32-37)		(3 Card Only) QUANTITY OR LOADING (46-53) AVERAGE	(54-61) MAXIMUM	UNITS	(4 Card Only) QUALITY OR CONCENTRATION (38-45) MINIMUM	(46-53) AVERAGE	(54-61) MAXIMUM	UNITS	NO. EX (62-63)	FREQUENCY OF ANALYSIS (64-68)	SAMPLE TYPE (69-70)
Total Suspended Solids	SAMPLE MEASUREMENT				5.5	6.0	7.0	MG/L		4/90	
	PERMIT REQUIREMENT						70				
Total Iron	SAMPLE MEASUREMENT				0.60	0.645	0.69	MG/L		4/90	
	PERMIT REQUIREMENT						2.0				
Total Dissolved Solids	SAMPLE MEASUREMENT				1101	1557	2019	MG/L	1	4/90	
	PERMIT REQUIREMENT				(1 ton/day)	or 2,000					
Oil & Grease	SAMPLE MEASUREMENT				<0.5	1.95	6.4	MG/L		4/90	
	PERMIT REQUIREMENT										
pH	SAMPLE MEASUREMENT				7.5	7.97	8.4	Stand. Units		4/90	
	PERMIT REQUIREMENT				6.5	--	9.0				
Flow (Intermittent Discharge)*	SAMPLE MEASUREMENT							See Note		4/90	
	PERMIT REQUIREMENT					Tied to TDS					
	SAMPLE MEASUREMENT										
	PERMIT REQUIREMENT										

NAME/TITLE PRINCIPAL EXECUTIVE OFFICER

Gordon Cook, V.P. and General Manager

TYPED OR PRINTED

I CERTIFY UNDER PENALTY OF LAW THAT I HAVE PERSONALLY EXAMINED AND AM FAMILIAR WITH THE INFORMATION SUBMITTED HEREIN; AND BASED ON MY INQUIRY OF THOSE INDIVIDUALS IMMEDIATELY RESPONSIBLE FOR OBTAINING THE INFORMATION, I BELIEVE THE SUBMITTED INFORMATION IS TRUE, ACCURATE AND COMPLETE. I AM AWARE THAT THERE ARE SIGNIFICANT PENALTIES FOR SUBMITTING FALSE INFORMATION, INCLUDING THE POSSIBILITY OF FINE AND IMPRISONMENT. SEE 18 U.S.C. § 1001 AND 33 U.S.C. § 1319. (Penalties under these statutes may include fines up to $10,000 and/or maximum imprisonment of between 6 months and 5 years.)

SIGNATURE OF PRINCIPAL EXECUTIVE OFFICER OR AUTHORIZED AGENT

TELEPHONE		DATE		
AREA CODE	NUMBER	YEAR	MO	DAY
801	472-341	83	4	4

COMMENT AND EXPLANATION OF ANY VIOLATIONS (Reference all attachments here)

*Flow has been about 16 hours per day at the rate of about 100 gpm. There was no discharge for 3+ weeks in February. Discharge occurs five days a week when mine sumps are pumped out.

PERMITTEE NAME/ADDRESS (Include Facility Name/Location if different)

NAME: PRICE RIVER COAL COMPANY

ADDRESS: P. O. Box 629
Helper, Utah 84526

FACILITY: No. 3 Mine

LOCATION:

NATIONAL POLLUTANT DISCHARGE ELIMINATION SYSTEM (NPDES)
DISCHARGE MONITORING REPORT (DMR)

Form Approved
OMB No. 2000-0015

PERMIT NUMBER (2-16)	DISCHARGE NUMBER (17-19)
UT-0023086	020

MONITORING PERIOD	YEAR	MO	DAY		YEAR	MO	DAY
FROM	83	3	31	TO	83	6	30
	(20-21)	(22-23)	(24-25)		(26-27)	(28-29)	(30-31)

NOTE: Read instructions before completing this form.

PARAMETER (32-37)		(3 Card Only) QUANTITY OR LOADING (46-53) AVERAGE	(54-61) MAXIMUM	UNITS	(4 Card Only) QUALITY OR CONCENTRATION (38-45) MINIMUM	(46-53) AVERAGE	(54-61) MAXIMUM	UNITS	NO. EX (62-63)	FREQUENCY OF ANALYSIS (64-68)	SAMPLE TYPE (69-70)
Total Suspended Solids	SAMPLE MEASUREMENT				2.5	3.6	5.5	MG/L	3	3/92	Grab
	PERMIT REQUIREMENT										
Total Iron	SAMPLE MEASUREMENT				0.05	0.11	0.17	MG/L	3		Grab
	PERMIT REQUIREMENT										
Total Dissolved Solids	SAMPLE MEASUREMENT				1503	1675	1805	MG/L	3		Grab
	PERMIT REQUIREMENT										
Oil & Grease	SAMPLE MEASUREMENT				.05	5.5	8.1	MG/L	3		Grab
	PERMIT REQUIREMENT										
pH	SAMPLE MEASUREMENT				8.0	8.05	8.1	Std. Units	3		Grab
	PERMIT REQUIREMENT										
Flow (7 to 12 hrs/day, 4-5 days/week)	SAMPLE MEASUREMENT				50	108	175	gpm	3		Grab
	PERMIT REQUIREMENT										
	SAMPLE MEASUREMENT										
	PERMIT REQUIREMENT										

NAME/TITLE PRINCIPAL EXECUTIVE OFFICER: Gordon Cook, V.P. and General Manager

TYPED OR PRINTED

I CERTIFY UNDER PENALTY OF LAW THAT I HAVE PERSONALLY EXAMINED AND AM FAMILIAR WITH THE INFORMATION SUBMITTED HEREIN; AND BASED ON MY INQUIRY OF THOSE INDIVIDUALS IMMEDIATELY RESPONSIBLE FOR OBTAINING THE INFORMATION, I BELIEVE THE SUBMITTED INFORMATION IS TRUE, ACCURATE AND COMPLETE. I AM AWARE THAT THERE ARE SIGNIFICANT PENALTIES FOR SUBMITTING FALSE INFORMATION, INCLUDING THE POSSIBILITY OF FINE AND IMPRISONMENT. SEE 18 U.S.C. § 1001 AND 33 U.S.C. § 1319. (Penalties under these statutes may include fines up to $10,000 and/or maximum imprisonment of between 6 months and 5 years.)

R. L. Uhley

SIGNATURE OF PRINCIPAL EXECUTIVE OFFICER OR AUTHORIZED AGENT

TELEPHONE AREA CODE	NUMBER	DATE YEAR	MO	DAY
801	472-3411	83	7	13

COMMENT AND EXPLANATION OF ANY VIOLATIONS (Reference all attachments here)

NOTE: Discharge point was inaccessible for obtaining samples during the periods of 4-1-83 to 4-21-83 and 5-1-83 to 5-31-83 due to flood waters in Price River.

Table 14-3 Value of "n" for drainage ditch design

Hydraulic radius	"n"
Less than 2.5	0.040 - 0.045
2.5 to 4.0	.035 - .040
4.0 to 5.0	.030 - .035
more than 5.0	.025 - .030

Ditch Bottom Widths

The type of machinery to be used for construction should be considered in the selection of ditch bottom widths. "V" type ditches are sometimes used when they are to be built with bulldozers or blade equipment. Flat bottom ditches frequently are designed when scrapers and draglines are to be used to construct the ditch. Depth of ditch and soil conditions affect the type of equipment used. Specified minimum bottom widths are often based on the types of equipment available.

Relationship Between Depth and Bottom Width

The most economical ditch section approaches that of a semicircle. As a general rule, a deep, narrow ditch will carry more water than a wide, shallow ditch of the same cross-sectional area. An excessively wide, shallow ditch tends to develop sand or silt bars which cause ditch meandering and bank cutting. A fairly deep, narrow ditch tends to increase velocities and to reduce siltation and meandering. The section selected is a matter of judgment, taking into account all factors involved. In some cases it may be necessary to sacrifice economy and hydraulic efficiency in the interest of ditch stability.

Calculation of Ditch Capacity

The volume of water passing a ditch cross section is calculated in cubic feet per second and is the product of the flow area cross section in square feet and the average velocity in the cross section expressed in feet per second.

The formula is: $Q = av$

Various curves and tables, all based on Manning's formula for velocity, have been prepared to determine ditch capacities. The "Hydraulic Tables" prepared by the Corps of Engineers are used also. See Exhibit 14-5 for SCS charts available for ditch design.

Ditch Berms

Adequate berms should be designed as required to provide roadways for maintenance equipment, to provide for work areas and to facilitate spoil-bank spreading, to prevent excavated material from washing back into ditches, and to prevent sloughing of ditchbanks caused by placing heavy loads too near the edge of the ditch.

TABLE 7-5

PEAK FLOW CALCULATIONS FOR SELECTED DRAINAGE AREAS (SEE EXHIBIT 7-1 FOR LOCATIONS)

WATER-SHED NO.	AREA A (ACRES)	RUNOFF COEF. C	GRA-DIENT FT/FT	MAX LENGTH (FT)	tc (MIN)	tc ROUNDED (MIN)	RAIN INTENSITY (INCHES/HR) 10 yr	25 yr	100 yr	RAIN INTENSITY (INCHES/HR) 10 yr	25 yr	100 yr	VOLUME OF FLOW (cfs) 10 yr	25yr	100 yr
SB1	16.4	0.4	0.51	1600	2.96	5	0.21	0.25	0.33	2.52	3.00	3.96	16.5	19.7	26.0
SB2	130.2	0.5	0.41	3200	5.50	5	0.21	0.25	0.33	2.52	3.00	3.96	164.1	195.3	257.8
SB3	1006.74	0.5	0.22	8700	15.09	15	0.41	0.50	0.66	1.64	2.00	2.64	825.5	1006.7	1328.9
SB4	131.33	0.5	0.33	3700	6.68	5	0.21	0.25	0.33	2.52	3.00	3.96	165.5	196.9	260.3
SB5	4.32	0.4	0.57	600	1.33	5	0.21	0.25	0.33	2.52	3.00	3.96	4.3	5.2	6.8
SB6	9.99	0.4	0.45	1250	2.57	5	0.21	0.25	0.33	2.52	3.00	3.96	10.1	11.9	15.8
SB7	1.52	0.4	1.00	100	0.27	5	0.21	0.25	0.33	2.52	3.00	3.96	160.7	191.3	252.5
HC1	127.53	0.5	0.34	3100	5.77	5	0.21	0.25	0.33	2.52	3.00	3.96	160.7	191.3	252.5
HC2	60.89	0.4	0.37	2650	4.95	5	0.21	0.25	0.33	2.52	3.00	3.96	61.5	73.1	96.2
HC3	61.29	0.4	0.66	1600	2.68	5	0.21	0.25	0.33	2.52	3.00	3.96	61.9	73.5	96.8
HC4	180.99	0.5	0.35	3400	6.12	5	0.21	0.25	0.33	2.52	3.00	3.96	228.0	271.5	358.4
HC5	359.25	0.5	0.22	5950	11.26	10	0.33	0.39	0.52	1.98	2.43	3.12	452.65	538.9	711.3
HC6	29.43	0.4	0.56	1700	3.00	5	0.21	0.25	0.33	2.52	3.00	3.96	29.72	35.3	46.5
HC7	5.55	0.4	0.50	600	1.40	5	0.21	0.25	0.33	2.52	3.00	3.96	5.6	6.6	8.8
HC8	11.07	0.4	0.58	1600	2.82	5	0.21	0.25	0.33	2.52	3.00	3.96	11.2	13.3	17.5
HC9	12.33	0.4	0.37	1800	3.67	5	0.21	0.25	0.33	2.52	3.00	3.96	12.45	14.8	19.5
HC10	6.18	0.4	0.56	1000	1.99	5	0.21	0.25	0.33	2.52	3.00	3.96	6.2	7.4	9.6
HC11	52.37	0.4	0.54	2250	3.77	5	0.21	0.25	0.33	2.52	3.00	3.96	52.9	62.8	82.7
HC12	9.5	0.4	0.47	1900	2.76	5	0.21	0.25	0.33	2.52	3.00	3.96	9.6	11.4	15.0
HC13	2.38	0.4	0.58	550	1.24	5	0.21	0.25	0.33	2.52	3.00	3.96	2.4	2.8	3.8
HC14	1.85	0.4	0.51	550	1.30	5	0.21	0.25	0.33	2.52	3.00	3.96	1.9	2.2	2.9
HC15	21.0	0.4	0.48	1250	2.51	5	0.21	0.25	0.33	2.52	3.00	3.96	21.2	25.2	33.3
HC16	19.71	0.4	0.53	1000	2.03	5	0.21	0.25	0.33	2.52	3.00	3.96	19.99	23.6	31.1
HC17	0.99	0.4	0.74	350	0.80	5	0.21	0.25	0.33	2.52	3.00	3.96	.9	1.2	1.6
HC18	1.5	0.4	0.44	600	1.13	5	0.21	0.25	0.33	2.52	3.00	3.96	1.5	1.8	2.4
CG1	90.41	0.5	0.56	2400	3.91	5	0.21	0.25	0.33	2.52	3.00	3.96	113.9	135.9	179.0
CG2	8.39	0.4	0.60	1000	1.94	5	0.21	0.25	0.33	2.52	3.00	3.96	8.5	10.1	13.3
CG3	26.39	0.4	0.49	1450	2.79	5	0.21	0.25	0.33	2.52	3.00	3.96	26.6	31.6	41.7
CG4	101.01	0.5	0.44	3600	5.86	5	0.21	0.25	0.33	2.52	3.00	3.96	127.3	151.5	200.0
CG5	63.88	0.4	0.45	3400	5.62		0.21	0.25	0.33	2.52	3.00	3.96	69.5	76.6	100.9
CG6	6.34	0.4	0.45	670	1.59	5	0.21	0.25	0.33	2.52	3.00	3.96	6.4	7.6	10.1
CG7	8.39	0.4	0.28	1430	3.42	5	0.21	0.25	0.33	2.52	3.00	3.96	8.47	10.1	13.2
CG8	3.71	0.4	0.53	750	1.63	5	0.21	0.25	0.33	2.52	3.00	3.96	3.7	4.5	5.9
CG9A	1050.0	0.5	0.18	12500	21.55	30	0.57	0.69	0.90	1.14	1.38	1.8	598.5	724.5	945.0
CG9B	188.2	0.5	0.26	6900	11.8	10	0.33	0.39	0.52	1.98	2.43	3.12	186.3	228.6	293.6
WC1	25.97	0.4	0.54	1600	2.89	5	0.21	0.25	0.33	2.52	3.00	3.96	26.2	31.2	41.0
WC2	15.10	0.4	0.50	1750	3.21	5	0.21	0.25	0.33	2.52	3.00	3.96	15.2	18.1	23.8
WC3	67.85	0.4	0.49	3340	5.29	5	0.21	0.25	0.33	2.52	3.00	3.96	68.6	81.4	107.2
WC4	32.54	0.4	0.52	1960	3.45	5	0.21	0.25	0.33	2.52	3.00	3.96	32.9	39.0	51.4
WC5	25.91	0.4	0.74	2100	3.16	5	0.21	0.25	0.33	2.52	3.00	3.96	26.2	31.[illegible]	[illegible]

TABLE 7-5

PEAK FLOW CALCULATIONS FOR SELECTED DRAINAGE AREAS(SEE EXHIBIT 7-1 FOR LOCATIONS)

WATER-SHED NO.	AREA A (ACRES)	RUNOFF COEF. C	GRA-DIENT FT/FT	MAX LENGTH (FT)	tc (MIN)	tc ROUNDED (MIN)	RAIN INTENSITY (INCHES tc) 10 yr	25 yr	100 yr	RAIN INTENSITY (INCHES/HR) 10 yr	25 yr	100 yr	VOLUME OF FLOW (cfs) 10 yr	25yr	100 yr
CC1	44.19	0.4	0.46	2600	4.48	5	0.21	0.25	0.33	2.52	3.00	3.96	44.6	53.0	69.8
CC2	108.0	0.5	0.34	4300	7.42	10	0.33	0.39	0.52	1.98	2.43	3.12	136.1	162.0	213.8
CC3	7.38	0.4	0.66	930	1.77	5	0.21	0.25	0.33	2.52	3.00	3.96	7.4	8.8	11.7
CC4	25.12	0.4	0.62	1970	3.23	5	0.21	0.25	0.33	2.52	3.00	3.96	25.4	30.1	39.7
CC5	12.46	0.4	0.73	1500	2.46	5	0.21	0.25	0.33	2.52	3.00	3.96	12.6	14.9	19.7
CC6	15.12	0.4	0.67	1710	2.81	5	0.21	0.25	0.33	2.52	3.00	3.96	15.3	18.1	23.9
CC7	45.71	0.4	0.54	2460	4.04	5	0.21	0.25	0.33	2.52	3.00	3.96	46.2	54.8	72.2
CC8	27.54	0.4	0.55	2220	3.70	5	0.21	0.25	0.33	2.52	3.00	3.96	27.8	33.0	43.5
CC9	10.37	0.4	0.75	1270	2.14	5	0.21	0.25	0.33	2.52	3.00	3.96	10.5	12.4	16.4
CC10	9.00	0.4	0.74	1190	2.04	5	0.21	0.25	0.33	2.52	3.00	3.96	9.1	10.8	14.2
CC11	6.94	0.4	0.73	950	1.73	5	0.21	0.25	0.33	2.52	3.00	3.96	7.0	8.3	10.9
CC12	5.04	0.4	0.67	1000	1.86	5	0.21	0.25	0.33	2.52	3.00	3.96	5.1	6.0	8.0
CC13	4.03	0.4	0.66	850	1.65	5	0.21	0.25	0.33	2.52	3.00	3.96	4.1	4.8	6.4
CC14	46.45	0.4	0.47	3000	4.96	5	0.21	0.25	0.33	2.52	3.00	3.96	47.0	55.7	73.4
CC15	2644.15	0.5	0.18	17300	27.66	30	0.57	0.69	0.90	1.14	1.38	1.8	1507.2	1824.5	2379.7
CC16	230.00	0.5	0.30	5000	8.74	10	0.33	0.39	0.52	1.98	2.43	3.12	289.8	345	455.4
CC17	230.00	0.5	0.37	5027	8.1	10	0.33	0.39	0.52	1.98	2.43	3.12	289.8	345	455.4
CC18	48.0	0.4	0.48	2920	4.82	5	0.21	0.25	0.33	2.52	3.00	3.96	48.5	57.6	75.8
CC19	19.5	0.4	0.40	1480	3.06	5	0.21	0.25	0.33	2.52	3.00	3.96	19.7	23.4	30.08
CC20	32.0	0.4	0.57	1850	3.18	5	0.21	0.25	0.33	2.52	3.00	3.96	32.2	38.4	50.7

REGISTERED PROFESSIONAL ENGINEER
No. 4157
KENNETH D. HUTCHINSON
STATE OF UTAH

DESIGN WORKSHEET FOR TRAPEZOIDAL SHAPED CHANNEL

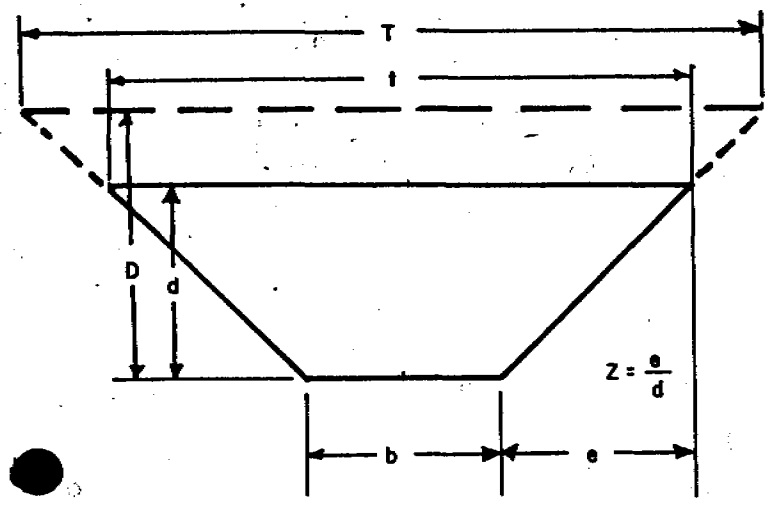

DATE 5-4-83

FACTOR VALUES

T ____ t 20'

D ____ d 5.5'

b 8' e 6

Z 1.09

FORMULAS

a = X-SECT. AREA = bd + Zd² 52.98 77 ft²

p = WETTED PERIMETER = $b + 2d\sqrt{Z^2+1}$ 23.9

R = HYDRAULIC RADIUS = $\frac{a}{p}$ 3.22

T/t = TOP WIDTH = b+2DZ / b+2dZ 20'

V = VELOCITY (fps) = $\frac{1.486}{n} R^{\frac{2}{3}} S^{\frac{1}{2}}$ 22.67

Q = CAPACITY (cfs) = aV 1746 cfs.

n = COEF. ROUGHNESS .035

S = SLOPE .06

CHANNEL LOCATION SOUTHERN OREGON D-1, 5B-3

REQ'D PEAK FLOW 825.5 cfs

8 x 5.5 = 44

$8 + 2(5.5)\sqrt{1.09^2+1} = 23.9$

$(42.46)(2.18)(.245) = 22.67$

#5

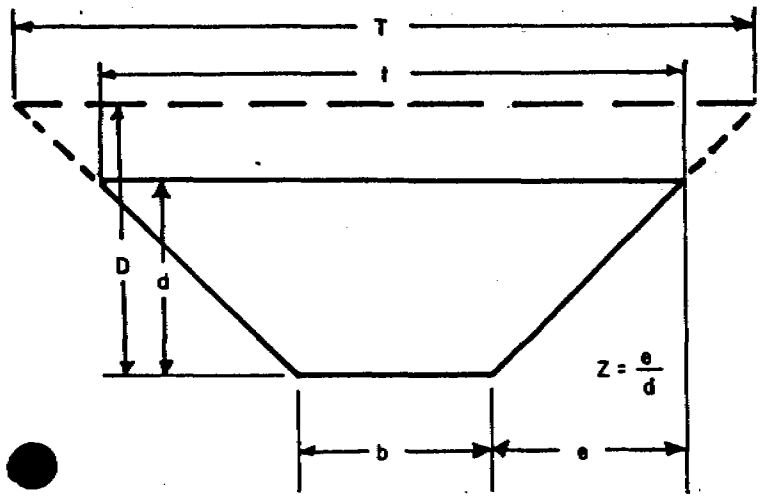

CHANNEL LOCATION Southeast D-2, N½ SB2

REQ'D PEAK FLOW 83 cfs

DESIGN WORKSHEET FOR TRAPEZOIDAL SHAPED CHANNEL

DATE 5-4-83

FACTOR VALUES		FORMULAS
T ____	t 11'	a = X-SECT. AREA = bd + Zd² (7.5, 10) 17.5
D ____	d 2.5	p = WETTED PERIMETER = b + 2d√(Z²+1) (4.5) 12.45
b 3	e 5.5	R = HYDRAULIC RADIUS = a/p 1.40
Z 1.6		T/t = TOP WIDTH = b+2DZ ____ / b+2dZ 11'
		V = VELOCITY (fps) = 1.486/n R^(2/3) S^(1/2) 16.75
		Q = CAPACITY (cfs) = aV 293 cfs
		n = COEF. ROUGHNESS 0.04
		S = SLOPE .13

1.486 / .040 × (1.40)^(2/3) × (.13)^(1/2)

1.2529 .36

37.15 × 1.2529 × 0.36

(37.15)(1.25)(.36)

#5

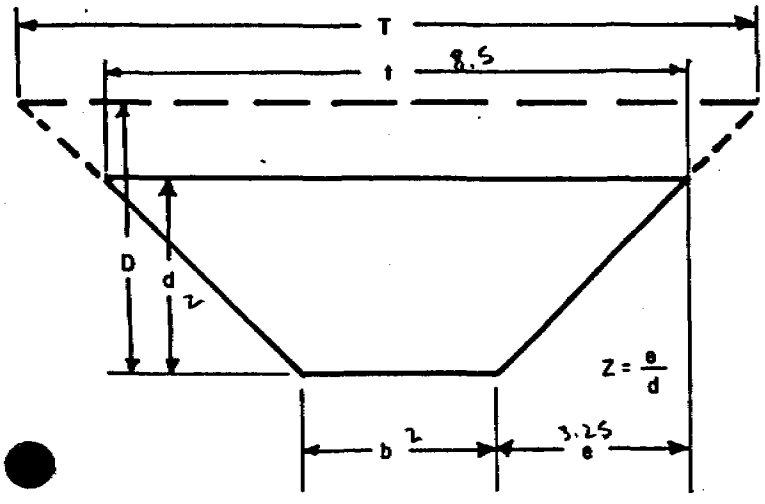

CHANNEL LOCATION SOUTHELLY. D3, ½ SB2

REQ'D PEAK FLOW 83 cfs

DESIGN WORKSHEET FOR TRAPEZOIDAL SHAPED CHANNEL

DATE 5/4/83

FACTOR VALUES

T ____ t 8.5

D ____ d 2

b 2 e 3.25

Z 1.62

FORMULAS

a = X-SECT. AREA = bd + Zd² (2×2) + 1.62×2² = 4 + 6.5 = 10.5

p = WETTED PERIMETER = b + 2d√(Z²+1) = 2 + (2×2)√(1.62²+1) = 2 + 4√3.6244 = 2 + 4 (1.904) = 9.6

R = HYDRAULIC RADIUS = a/p 1.09

T/t = TOP WIDTH = b+2DZ ____ / b+2dZ 8.5

V = VELOCITY (fps) = 1.486/n R^(2/3) S^(1/2) = 1.486/0.04 (1.09)^(2/3) (0.12)^(1/2) = 37.15 × 1.06 × .35 = 13.76

Q = CAPACITY (cfs) = aV 144

n = COEF. ROUGHNESS 0.04

S = SLOPE 0.12

#5

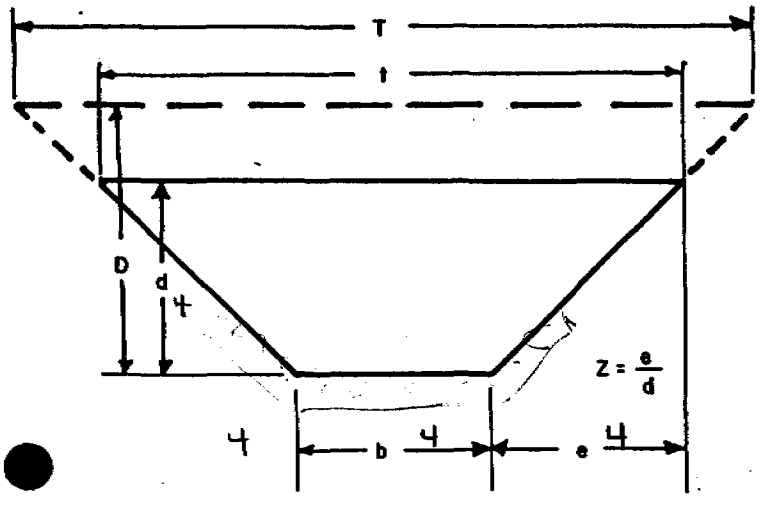

DESIGN WORKSHEET FOR TRAPEZOIDAL SHAPED CHANNEL

DATE 5/4/63

FACTOR VALUES

T ____ t 12'

D ____ d 4'

b 4' e 4

Z 1

FORMULAS

a = X-SECT. AREA = bd + Zd² = (4×4) + 1×4² = 16+16 = 32

p = WETTED PERIMETER = b + 2d√(Z²+1) = 4 + (2×4)√(1²+1) = 4 + 8√2 = 4 + 8 × 1.414 = 15.3

R = HYDRAULIC RADIUS = a/p 2.09'

T/t = TOP WIDTH = b+2DZ ____ / b+2dZ 12

V = VELOCITY (fps) = 1.486/n R^(2/3) S^(1/2) = (1.486/0.045)(2.09)^(2/3)(.08)^(1/2) = 33.02 × 1.635 × 0.283 = 15.28

Q = CAPACITY (cfs) = aV 489

n = COEF. ROUGHNESS 0.045

S = SLOPE 0.08

CHANNEL LOCATION SOUBELLY D-4, SB4A

REQ'D PEAK FLOW 36 cfs

36 ac

#5

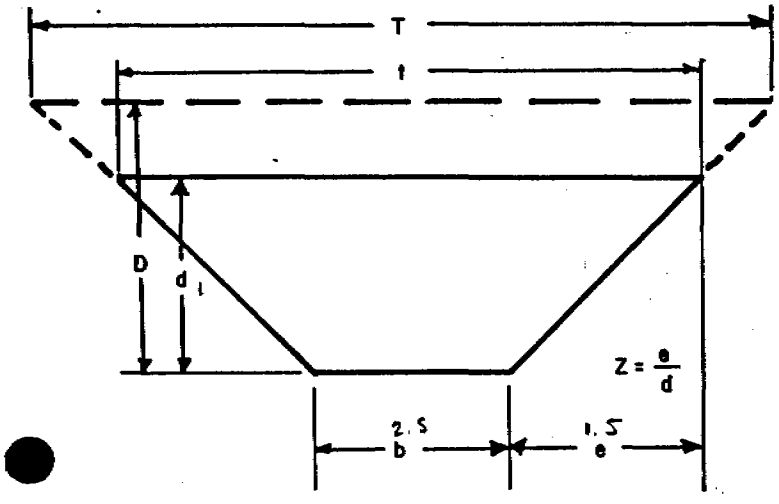

CHANNEL LOCATION SAWBELLY D-5, SB-5

REQ'D PEAK FLOW 5 cfs

DESIGN WORKSHEET FOR TRAPEZOIDAL SHAPED CHANNEL

DATE 5/4/83

FACTOR VALUES

T ____ t 5.5

D ____ d 1'

b 2.5 e 1.5

Z 1.5

FORMULAS

a = X-SECT. AREA = $bd + Zd^2$ = (2.5×1) + [1.5×(1)²] = 4

p = WETTED PERIMETER = $b + 2d\sqrt{Z^2+1}$ = 2.5 + (2×1)√(1.5²+1) = 2.5 + 2√3.25 = 2.5 + 2(1.8) = 6.1

R = HYDRAULIC RADIUS = a/p 0.66

T/t = TOP WIDTH = b+2DZ ____ / b+2dZ 5.5

V = VELOCITY (fps) = $\frac{1.486}{n} R^{\frac{2}{3}} S^{\frac{1}{2}}$ = 1.486/0.040 × (.66)^2/3 × (.14)^1/2 = 37.15 × .757 × .374

Q = CAPACITY (cfs) = aV 10.5

n = COEF. ROUGHNESS 0.040

S = SLOPE 0.14

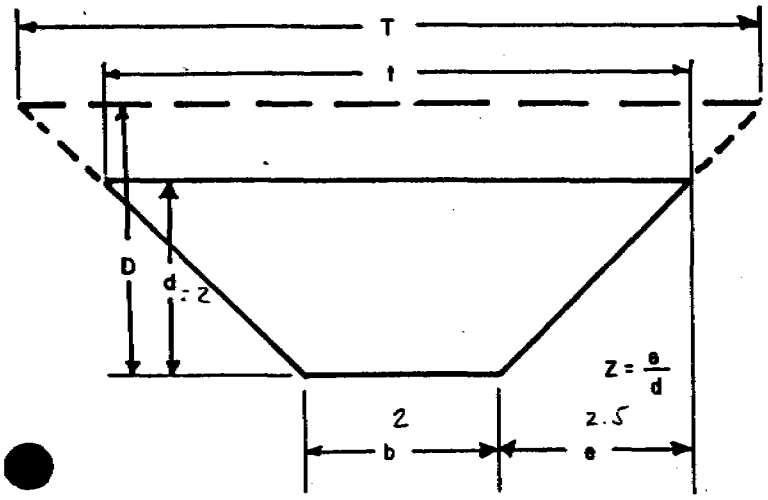

CHANNEL LOCATION SAWBELLY D-6

REQ'D PEAK FLOW 2 cfs

DESIGN WORKSHEET FOR TRAPEZOIDAL SHAPED CHANNEL

DATE 5/4/83

FACTOR VALUES

T ____ t 7'

D ____ d 2'

b 2' e 2.5

Z 1.25

FORMULAS

a = X-SECT. AREA = $bd + Zd^2$ = 2x2 + 1.25(2)² = 9

p = WETTED PERIMETER = $b + 2d\sqrt{Z^2+1}$ = 2 + 2x2 $\sqrt{1.25^2+1}$ = 2+4 $\sqrt{2.5625}$ = 2+4.4 = 8.4 (1.60)

R = HYDRAULIC RADIUS = $\frac{a}{p}$ 1.07

T/t = TOP WIDTH = b+2DZ / b+2dZ 7

V = VELOCITY (fps) = $\frac{1.486}{n} R^{\frac{2}{3}} S^{\frac{1}{2}}$ = $\frac{1.486}{0.4}(1.07)^{2/3}(.15)^{1/2}$ = 37.15 x 1.046 x 0.387 = 15.03

Q = CAPACITY (cfs) = aV 135

n = COEF. ROUGHNESS 0.040

S = SLOPE 0.15

#5

DESIGN WORKSHEET FOR TRAPEZOIDAL SHAPED CHANNEL

$(12 \times 1.75 + 3 \times 3.0625)$
$21 + 9.18$

DATE 6/1/83

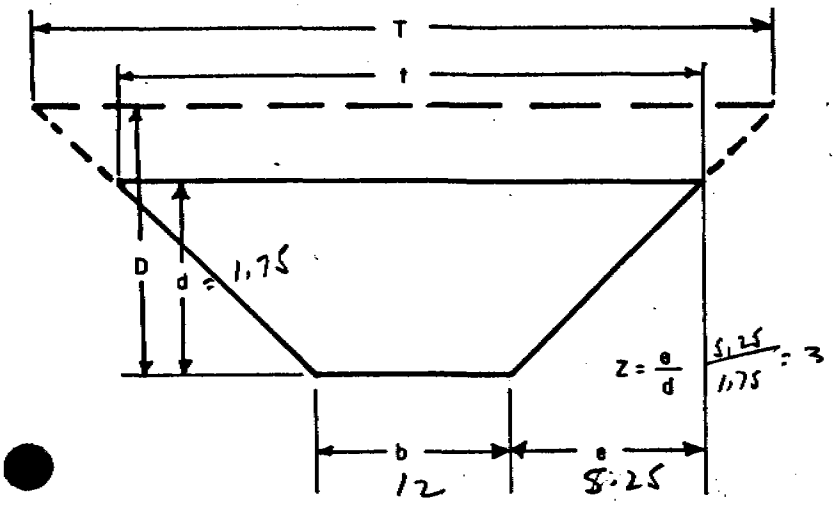

CHANNEL LOCATION SB-4
RC-1

REQ'D PEAK FLOW 261 cfs

FACTOR VALUES

T ____ t 22.5
D ____ d 1.75
b 12 e 5.25
Z 3

FORMULAS

a = X-SECT. AREA = $bd + Zd^2$ 30+18

p = WETTED PERIMETER = $b + 2d\sqrt{Z^2+1}$ $12 + 3.5\sqrt{10} = 23.07$

R = HYDRAULIC RADIUS = $\frac{a}{p}$ 1.31

T/t = TOP WIDTH = $b+2DZ$ ____ / $b+2dZ$ ____

V = VELOCITY (fps) = $\frac{1.486}{n} R^{\frac{2}{3}} S^{\frac{1}{2}}$ $= 37.15 \times 1.20 \times 0.2 = 8.92$

Q = CAPACITY (cfs) = aV 269

n = COEF. ROUGHNESS 0.04

S = SLOPE 0.04

#5

DESIGN WORKSHEET FOR TRAPEZOIDAL SHAPED CHANNEL

$(50 \times 2) + 3(2^2)$
100 + 12

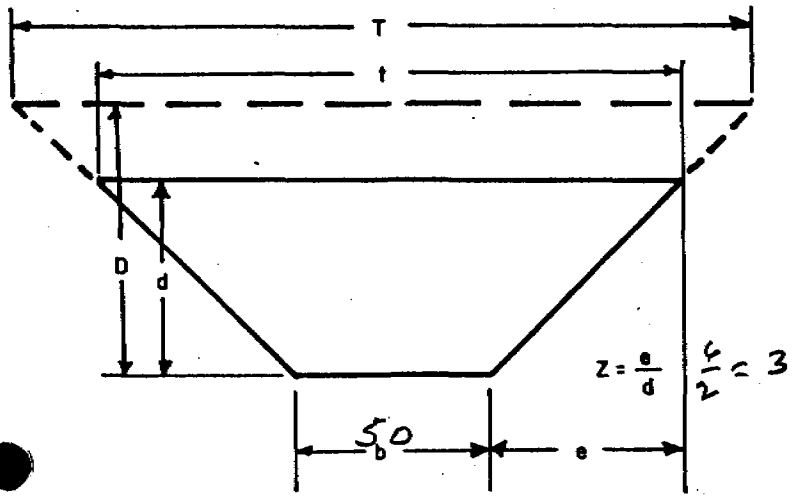

DATE 6/1/83

FACTOR VALUES

T ____ t ____

D ____ d 2

b 50 e 6

Z 3

FORMULAS

a = X-SECT. AREA = $bd + Zd^2$ 112

p = WETTED PERIMETER = $b + 2d\sqrt{Z^2+1}$ $50 + 4\sqrt{10} = 62.65$

R = HYDRAULIC RADIUS = $\frac{a}{p}$ 1.79

T/t = TOP WIDTH = b+2DZ ____ / b+2dZ ____

V = VELOCITY (fps) = $\frac{1.486}{n} R^{\frac{2}{3}} S^{\frac{1}{2}}$ = 37.15 × 1.48 × 0.14 = 7.7

Q = CAPACITY (cfs) = aV 862

n = COEF. ROUGHNESS 0.04

S = SLOPE 0.02

CHANNEL LOCATION SB-3 / RC-2

REQ'D PEAK FLOW 829 cfs

#5

DESIGN WORKSHEET FOR TRAPEZOIDAL SHAPED CHANNEL

$(14 \times 1.2) + 3\,(1.2^2)$
$16.8 + 4.32$

DATE 6/1/83

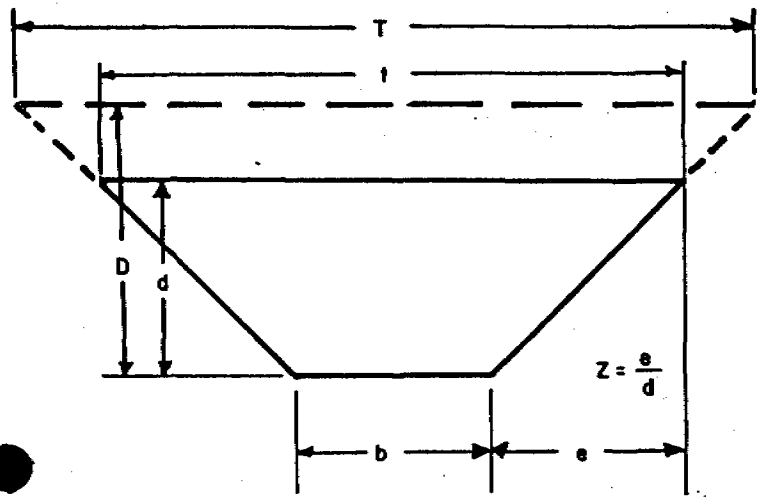

CHANNEL LOCATION SB-2 / RC-3

REQ'D PEAK FLOW 258 cfs

FACTOR VALUES

T ____ t ____

D ____ d 1.2

b 14 e 3.6

Z 3

FORMULAS

a = X-SECT. AREA = $bd + Zd^2$ 21.1

p = WETTED PERIMETER = $b + 2d\sqrt{Z^2+1}$ $14 + 2.4\sqrt{10}$: 21.59

R = HYDRAULIC RADIUS = $\frac{a}{p}$ 0.98

T/t = TOP WIDTH = b+2DZ ____ / b+2dZ ____

V = VELOCITY (fps) = $\frac{1.486}{n} R^{\frac{2}{3}} S^{\frac{1}{2}}$ = 37.15 × 0.98 × 0.35 = 12.74

Q = CAPACITY (cfs) = aV 269

n = COEF. ROUGHNESS 0.04

S = SLOPE 0.12

H 5

DESIGN WORKSHEET FOR TRAPEZOIDAL SHAPED CHANNEL

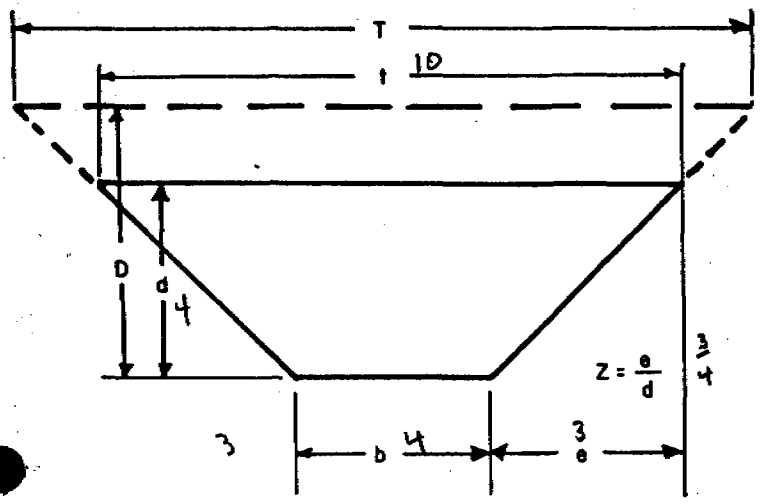

CHANNEL LOCATION HARDSCRAPBLE D-1, HC-5

REQ'D PEAK FLOW 452 cfs

FACTOR VALUES

T ____ t 10

D ____ d 4

b 4 e 3

Z 0.75

FORMULAS

DATE 5/4/83

a = X-SECT. AREA = $bd + Zd^2$ $(4\times4)+0.75\times(4)^2 = 28$ $= 28$

p = WETTED PERIMETER = $b + 2d\sqrt{Z^2+1}$ $= 4+(2\times4)\times\sqrt{0.75^2+1} = 14$

R = HYDRAULIC RADIUS = $\frac{a}{p}$ 2.0

T, t = TOP WIDTH = $b+2DZ$ ____ / $b+2dZ$ 10

V = VELOCITY (fps) = $\frac{1.486}{n} R^{\frac{2}{3}} S^{\frac{1}{2}}$ $\frac{1.486}{0.043}(2.0)^{2/3}(0.05)^{1/2}$

Q = CAPACITY (cfs) = aV 345 $34.56 \times 1.59 \times 0.224 = 12.3$

n = COEF. ROUGHNESS 0.043

S = SLOPE 0.05

#3

DESIGN WORKSHEET FOR TRAPEZOIDAL SHAPED CHANNEL

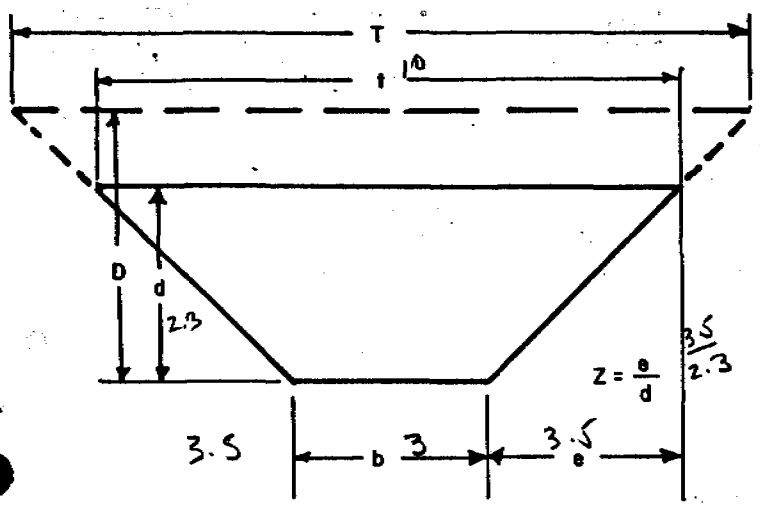

CHANNEL LOCATION HARD SCRAPPLE D-2, HC-9

REQ'D PEAK FLOW 13 cfs

FACTOR VALUES

T ____ t 10

D ____ d 2.3

b 3 e 3.5

Z 1.52

FORMULAS

DATE 5/4/83

a = X-SECT. AREA = $bd + Zd^2$ $(3 \times 2.3) + 1.52 \times (2.3)^2$ = 14.94

p = WETTED PERIMETER = $b + 2d\sqrt{Z^2+1}$ = $3 + 2 \times 2.3\sqrt{1.52^2+1}$ = 11.37

R = HYDRAULIC RADIUS = $\frac{a}{p}$ 1.31

T/t = TOP WIDTH = b+2DZ / b+2dZ 10

V = VELOCITY (fps) = $\frac{1.486}{n} R^{\frac{2}{3}} S^{\frac{1}{2}}$ = $\frac{1.486}{0.04}(1.31)^{2/3}(0.15)^{1/2}$ $37.15 \times 1.197 \times 0.387$ = 17.21

Q = CAPACITY (cfs) = aV 257

n = COEF. ROUGHNESS 0.40

S = SLOPE 0.15

DESIGN WORKSHEET FOR TRAPEZOIDAL SHAPED CHANNEL

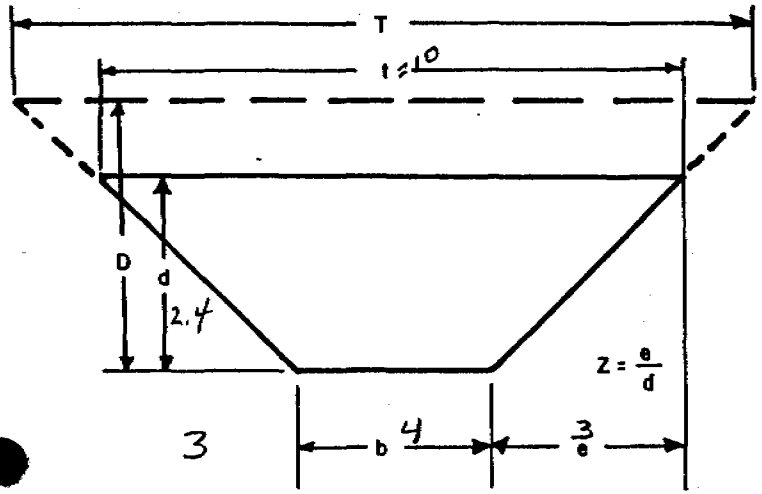

CHANNEL LOCATION HARDSCRABBLE D-3, H C-3

REQ'D PEAK FLOW 62 cfs

FACTOR VALUES

T ____ t 10

D ____ d 2.4

b 4 e 3

Z 1.25

FORMULAS

DATE 5/4/83

a = X-SECT. AREA = $bd + Zd^2$ $(4 \times 2.4) + 1.25 \times (2.4)^2$ = 16.8

p = WETTED PERIMETER = $b + 2d\sqrt{Z^2+1}$ = $4 + \sqrt{2} \times 2.4 \sqrt{1.25^2+1}$ $4 + 4.8\sqrt{2.5625}$ = 11.68

R = HYDRAULIC RADIUS = $\frac{a}{p}$ 1.44

T, t = TOP WIDTH = b+2DZ ____ / b+2dZ 10

V = VELOCITY (fps) = $\frac{1.486}{n} R^{\frac{2}{3}} S^{\frac{1}{2}}$ = $\frac{1.486}{0.04}(1.44)^{2/3}(0.15)^{1/2}$

Q = CAPACITY (cfs) = aV 308 $37.15 \times 1.275 \times 0.387$ = 18.33

n = COEF. ROUGHNESS 0.040

S = SLOPE 0.15

DESIGN WORKSHEET FOR TRAPEZOIDAL SHAPED CHANNEL

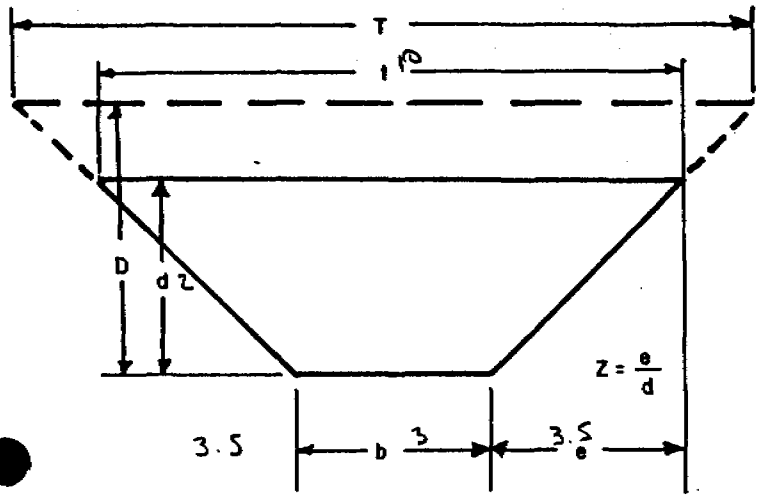

DATE 5/4/83

FACTOR	VALUE	FACTOR	VALUE
T		t	10
D		d	2
b	3	e	
Z	1.75		

FORMULAS

a = X-SECT. AREA = $bd + Zd^2$ $(3 \times 2) + 1.75 \times (2)^2 = 6 + 7 = 13$

p = WETTED PERIMETER = $b + 2d\sqrt{Z^2+1}$ $3 + (2 \times 2)\sqrt{1.75^2+1} = 11.06$

R = HYDRAULIC RADIUS = $\frac{a}{p}$ 1.18

T / t = TOP WIDTH = b+2DZ / b+2dZ 10

V = VELOCITY (fps) = $\frac{1.486}{n} R^{\frac{2}{3}} S^{\frac{1}{2}} = \frac{1.486}{0.040} (1.18)^{2/3} (0.07)^{1/2}$

Q = CAPACITY (cfs) = aV 143 $13 \times 1.117 \times 0.265 = 11$

n = COEF. ROUGHNESS 0.040

S = SLOPE 0.07

CHANNEL LOCATION HARDSCRABBLE B-4, HC-4 & HC-5

REQ'D PEAK FLOW 681 cfs

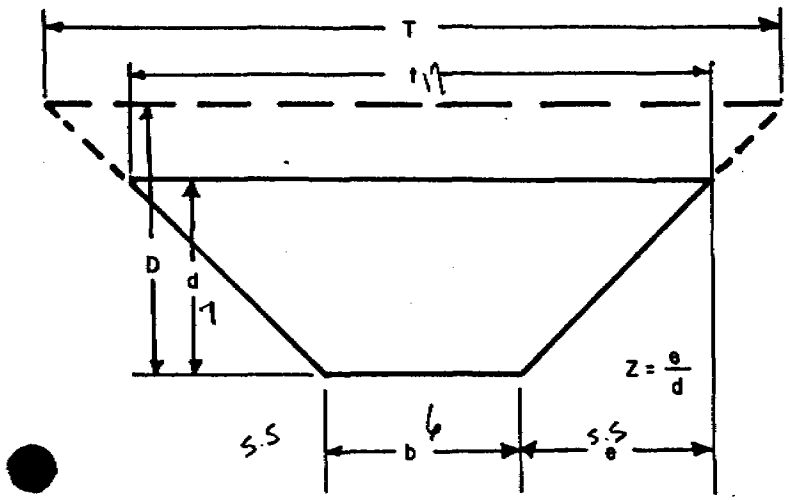

CHANNEL LOCATION HARDSCRABBLE
D-5, HC-4, HC-5, HC 13

REQ'D PEAK FLOW 684 cfs

DESIGN WORKSHEET FOR TRAPEZOIDAL SHAPED CHANNEL

DATE 5/4/83

FACTOR VALUES

T ____ t 17'

D ____ d 7'

b 6' e 5.5

Z 0.786

FORMULAS

a = X-SECT. AREA = $bd + Zd^2$ = $(6\times7) + 0.786\times(7)^2$ = 42 + 38.5 = 80.5

p = WETTED PERIMETER = $b + 2d\sqrt{Z^2+1}$ = $6 + (2\times7)\sqrt{.786^2+1}$ = $6 + 14\sqrt{1.617796}$ = 23.81

R = HYDRAULIC RADIUS = $\frac{a}{p}$ 3.38

T, t = TOP WIDTH = b+2DZ ____ / b+2dZ 17

V = VELOCITY (fps) = $\frac{1.486}{n} R^{\frac{2}{3}} S^{\frac{1}{2}}$ = $\frac{1.486}{0.037}(3.38)^{2/3}(0.06)^{1/2}$ = 40.16 × 2.253 × 0.2449 = 22.16

Q = CAPACITY (cfs) = aV 1783

n = COEF. ROUGHNESS 0.037

S = SLOPE 0.06

#3

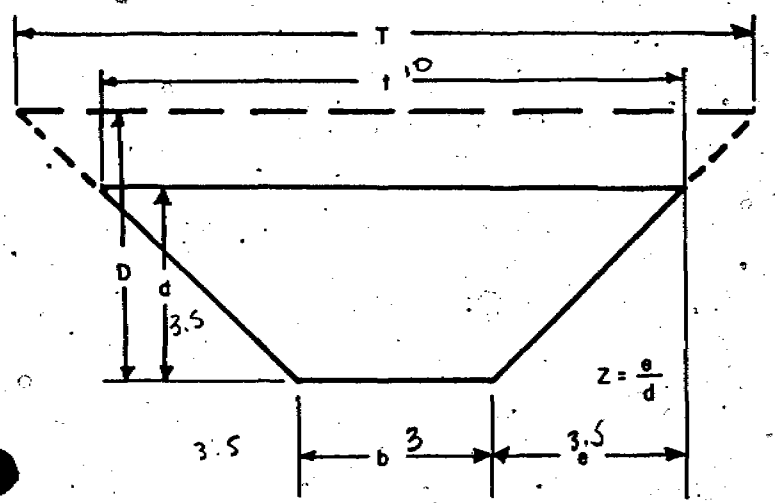

DESIGN WORKSHEET FOR TRAPEZOIDAL SHAPED CHANNEL

DATE 5/4/13

FACTOR	VALUES		
T		t	10
D		d	3.5
b	3	a	3.5
Z	1.0		

FORMULAS

a = ~~X~~ SECT. AREA = $bd + Zd^2 = (3 \times 3.5) + 1.0(3.5)^2 = 10.5 + 12.25 = 22.75$

p = WETTED PERIMETER = $b + 2d\sqrt{Z^2+1} = 3 + [(2 \times 3.5)\sqrt{1^2+1}$
$= 3 + 7\sqrt{2} = 3 + 7 \times 1.414$
$= 12.89$

R = HYDRAULIC RADIUS = $\frac{a}{p}$ 1.76

T = TOP WIDTH = $b + 2DZ$ ____
t = $b + 2dZ$ 10

V = VELOCITY (fps) = $\frac{1.486}{n} R^{\frac{2}{3}} S^{\frac{1}{2}} = \frac{1.486}{0.04}(1.76)^{2/3}(0.06)^{1/2}$
$= 37.15 \times 1.46 \times 0.24 = 13$

Q = CAPACITY (cfs) = aV 296

n = COEF. ROUGHNESS 0.04

S = SLOPE 0.06

CHANNEL LOCATION HARDD SCRABBLE
D-6, HC-4, HC-5, HC-13, HC-2, HC-16.

REQ'D PEAK FLOW 766 cfs

54
63.15
3.5
76 3.5

DESIGN WORKSHEET FOR TRAPEZOIDAL SHAPED CHANNEL

$(8 \times 1) + 3(1^2)$

8 3

DATE 6/3/83

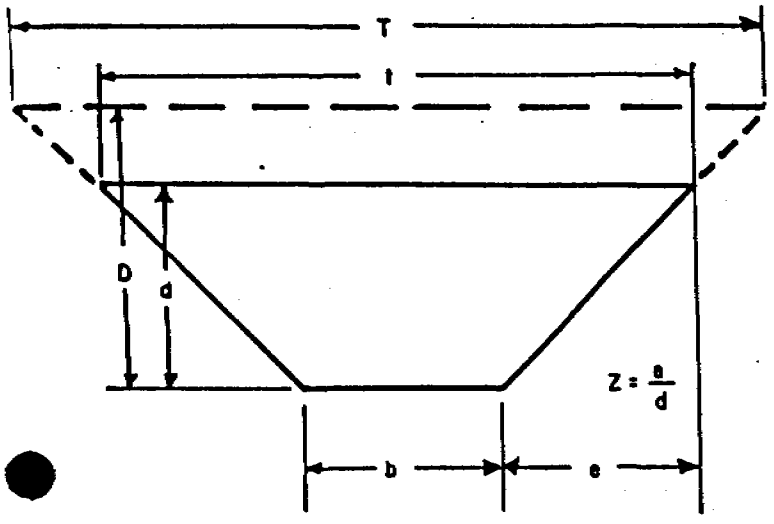

CHANNEL LOCATION HC-3,9,10
RC-1

REQ'D PEAK FLOW 126 cfs

FACTOR VALUES		FORMULAS	
T 14	t ____	a = X-SECT. AREA = bd + Zd²	11
D 1	d ____	p = WETTED PERIMETER = b + 2d√(Z²+1)	8+(2×1)√10 = 14.32
b 8	e 3	R = HYDRAULIC RADIUS = a/p	0.77
Z 3		T/t = TOP WIDTH = b+2DZ / b+2dZ	14
		V = VELOCITY (fps) = 1.486/n R^(2/3) S^(1/2)	37.15 × 0.84 × 0.39 = 12.17
		Q = CAPACITY (cfs) = aV	134
		n = COEF. ROUGHNESS	0.04
		S = SLOPE	0.15

#3

DESIGN WORKSHEET FOR TRAPEZOIDAL SHAPED CHANNEL

$(8 \times 1.5) + 3(1.5^2)$

$12 + 6.75$

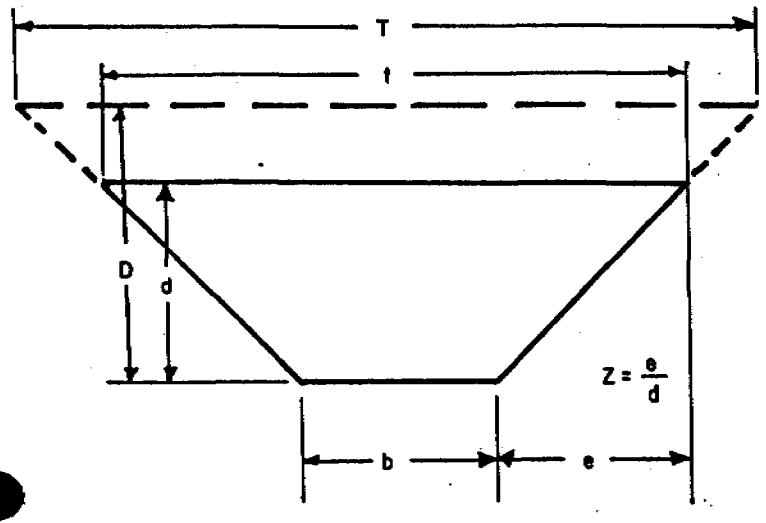

DATE 6/2/83

FACTOR VALUES

T 17 t ____

D 1.5 d ____

b 8 e 4.5

Z 3

FORMULAS

a = X-SECT. AREA = $bd + Zd^2$ = 18.75

p = WETTED PERIMETER = $b + 2d\sqrt{Z^2+1}$ $8 + 2(1.5) \times \sqrt{10}$ = 17.49

R = HYDRAULIC RADIUS = $\frac{a}{p}$ 1.07

T/t = TOP WIDTH = $b + 2DZ$ 17 / $b + 2dZ$ ____

V = VELOCITY (fps) = $\frac{1.486}{n} R^{\frac{2}{3}} S^{\frac{1}{2}}$ = 37.15 x 1.05 x 0.59 = 23.01

Q = CAPACITY (cfs) = aV 432

n = COEF. ROUGHNESS 0.04

S = SLOPE 0.35

CHANNEL LOCATION Hc-4 / Rc-2

REQ'D PEAK FLOW 358 cfs

#3

DESIGN WORKSHEET FOR TRAPEZOIDAL SHAPED CHANNEL

$(10 \times 3) + .3(3^2)$
30 27

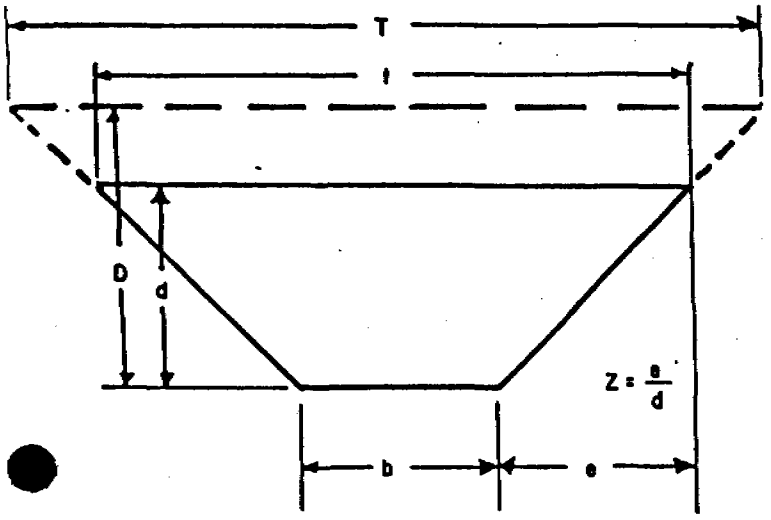

DATE 6/3/83

FACTOR VALUES		FORMULAS
T 2.8	t ____	a = X-SECT. AREA = $bd + Zd^2$ 57
D 3	d ____	p = WETTED PERIMETER = $b + 2d\sqrt{Z^2+1}$ = $10 + (2 \times 3)\sqrt{10}$ = 28.97
b 10	e 9	R = HYDRAULIC RADIUS = $\frac{a}{p}$ 1.97
Z 3		T = TOP WIDTH = b+2DZ ____
		t = TOP WIDTH = b+2dZ ____
		V = VELOCITY (fps) = $\frac{1.486}{n} R^{\frac{2}{3}} S^{\frac{1}{2}}$ = 37.15 × 1.58 × 0.35 = 20.54
		Q = CAPACITY (cfs) = aV 1171
		n = COEF. ROUGHNESS 0.04
		S = SLOPE 0.12

CHANNEL LOCATION HC-4,5,6,7
RC-3

REQ'D PEAK FLOW 1,125 cfs

DESIGN WORKSHEET FOR TRAPEZOIDAL SHAPED CHANNEL

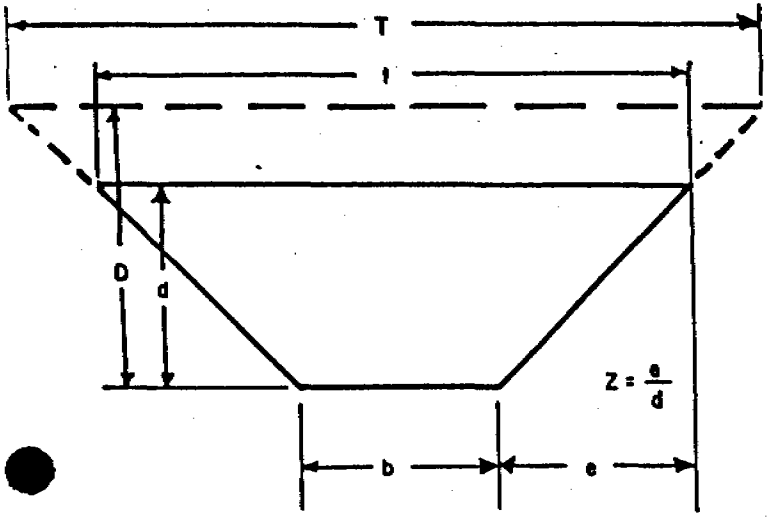

CHANNEL LOCATION HC-11 / RC-4

REQ'D PEAK FLOW 83 cfs

DATE 6/3/83

FACTOR VALUES

T 12 t ____

D 1 d ____

b 6 e 3

Z 3

FORMULAS

a = X-SECT. AREA = bd + Zd² 9 $(6\times1)+3(1^2)$ 6 + 3

p = WETTED PERIMETER = $b+2d\sqrt{Z^2+1}$ $6\ (2\times1)\sqrt{10} = 12.32$

R = HYDRAULIC RADIUS = $\frac{a}{p}$ 0.73

T, t = TOP WIDTH = b+2DZ ____ / b+2dZ ____

V = VELOCITY (fps) = $\frac{1.486}{n} R^{\frac{2}{3}} S^{\frac{1}{2}}$ = 37.15 $= 0.81 \times 0.32 = 9.63$

Q = CAPACITY (cfs) = aV 87

n = COEF. ROUGHNESS 0.04

S = SLOPE 0.10

H.S.

DESIGN WORKSHEET FOR TRAPEZOIDAL SHAPED CHANNEL

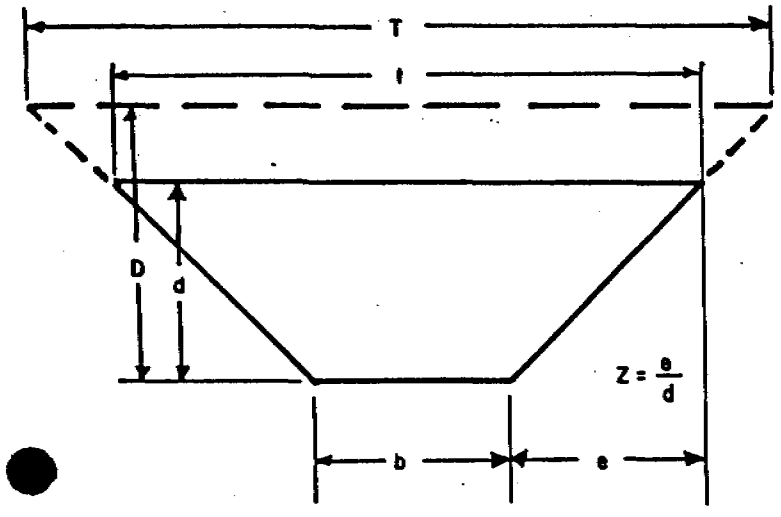

DATE 6-3-85

FACTOR VALUES

T 31 t ____

D 2.5 d ____

b 16 e 7.5

Z 3

FORMULAS

a = X-SECT. AREA = bd + Zd² 76.25

p = WETTED PERIMETER = b + 2d√(Z²+1) 31.8

R = HYDRAULIC RADIUS = a/p 3.0 (2.09)

T/t = TOP WIDTH = b+2DZ / b+2dZ ____

V = VELOCITY (fps) = (1.486/n) R^(2/3) S^(1/2) 19.04

Q = CAPACITY (cfs) = aV 1832

n = COEF. ROUGHNESS .04 (.0315)

S = SLOPE 0.06 (.0275)

CHANNEL LOCATION RC -5

REQ'D PEAK FLOW 920 cfs

32 + 25

16 + 4√10

40

16 + 5√

#3

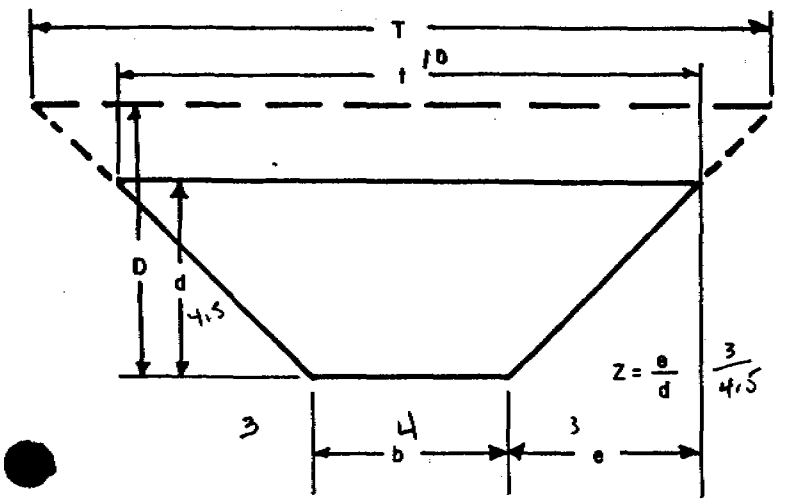

CHANNEL LOCATION CASTLE GATE
D-1, C6-8

REQ'D PEAK FLOW 4 cfs

DESIGN WORKSHEET FOR TRAPEZOIDAL SHAPED CHANNEL

DATE 5/4/83

FACTOR VALUES

T ____ t 10

D ____ d 4.5

b 4 e 3

Z 0.67

FORMULAS

a = X-SECT. AREA = $bd + Zd^2 = (4 \times 4.5) + 0.67(4.5)^2$ = 31.5

p = WETTED PERIMETER = $b + 2d\sqrt{Z^2+1} = 4 + 2 \times 4.5\sqrt{0.67^2+1}$ = 14.8

R = HYDRAULIC RADIUS = $\frac{a}{p}$ 2.13

T / t = TOP WIDTH = b+2DZ ____ / b+2dZ 10

V = VELOCITY (fps) = $\frac{1.486}{n} R^{\frac{2}{3}} S^{\frac{1}{2}} = \frac{1.486}{0.045}(2.13)^{2/3}(0.08)^{1/2}$

Q = CAPACITY (cfs) = aV 541 $31.5 \times 1.66 \times 0.28$ = 17.2

n = COEF. ROUGHNESS 0.045

S = SLOPE 0.08

DESIGN WORKSHEET FOR TRAPEZOIDAL SHAPED CHANNEL

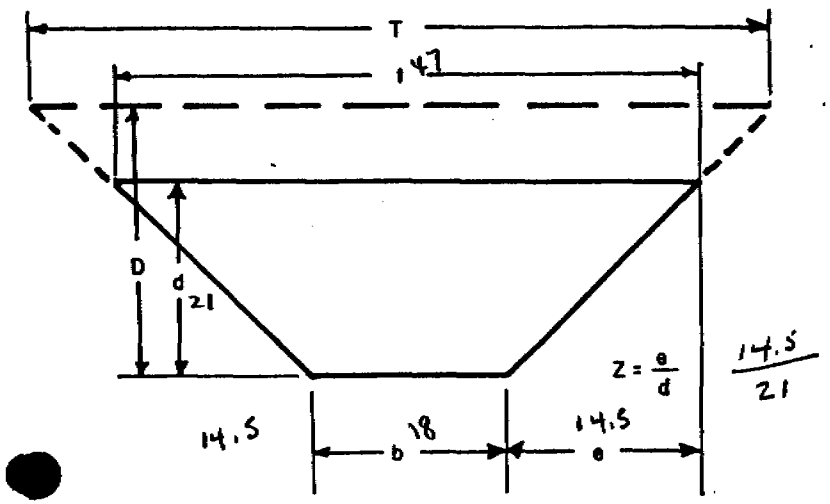

DATE 5/4/83

FACTOR VALUES

T ____ t 47

D ____ d 21

b 18 e 14.5

Z 0.69

FORMULAS

a = X-SECT. AREA = $bd + Zd^2 = (18 \times 21) + 0.69(21)^2$ = 692

p = WETTED PERIMETER = $b + 2d\sqrt{Z^2+1} = 18 + 2 \times 21\sqrt{0.69^2+1}$ = 69

R = HYDRAULIC RADIUS = $\frac{a}{p}$ 9.88

T/t = TOP WIDTH = b+2DZ / b+2dZ 47

V = VELOCITY (fps) = $\frac{1.486}{n} R^{\frac{2}{3}} S^{\frac{1}{2}} = \frac{1.486}{0.03}(9.88)^{2/3}(0.06)^{1/2}$

$49.53 \times 4.61 \times 0.24 = 54.8$

Q = CAPACITY (cfs) = aV 37373

n = COEF. ROUGHNESS 0.030

S = SLOPE 0.06

CHANNEL LOCATION CATTLE GATE D-2, CG 9A & 9B

REQ'D PEAK FLOW 786 cfs

522
186
-56

DESIGN WORKSHEET FOR TRAPEZOIDAL SHAPED CHANNEL

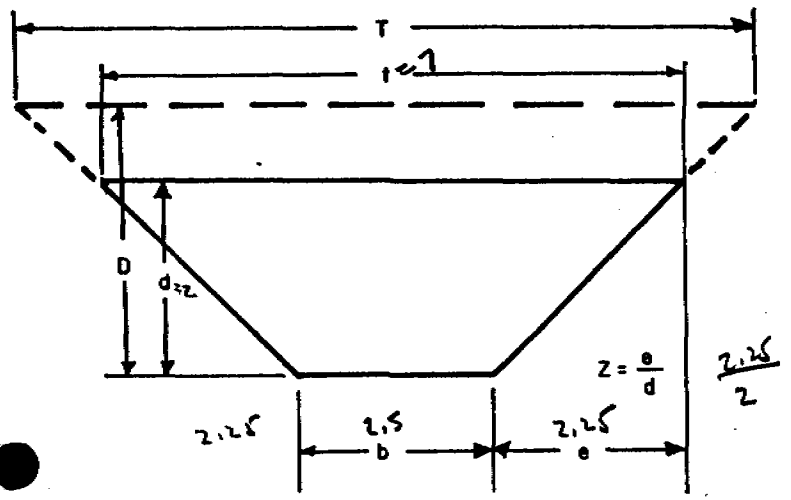

DATE 5/4/83

FACTOR VALUES

T ____ t 7'

D ____ d 2'

b 2.5' e 2.25

z 1.13

FORMULAS

a = X-SECT. AREA = bd + Zd² $\cancel{(2.5\times2)+2\times1.13(2)}$ $1.13(2)^2$ ≈ 7.5

p = WETTED PERIMETER = b + 2d$\sqrt{Z^2+1}$ = 2.5+2×2$\sqrt{1.13^2+1}$ = 8.5

R = HYDRAULIC RADIUS = a/p 1.12

T/t = TOP WIDTH = b+2DZ ____ / b+2dZ 7

V = VELOCITY (fps) = 1.486/n $R^{2/3}S^{1/2}$ = 1.486/0.04 $(1.12)^{2/3}(0.06)^{1/2}$

37.15 × 1.08 × 0.24 = 9.82

Q = CAPACITY (cfs) = aV 93

n = COEF. ROUGHNESS 0.04

S = SLOPE 0.06

CHANNEL LOCATION CASTLE GATE D-3, C6-7

REQ'D PEAK FLOW 9 cfs

CASTLE GATE

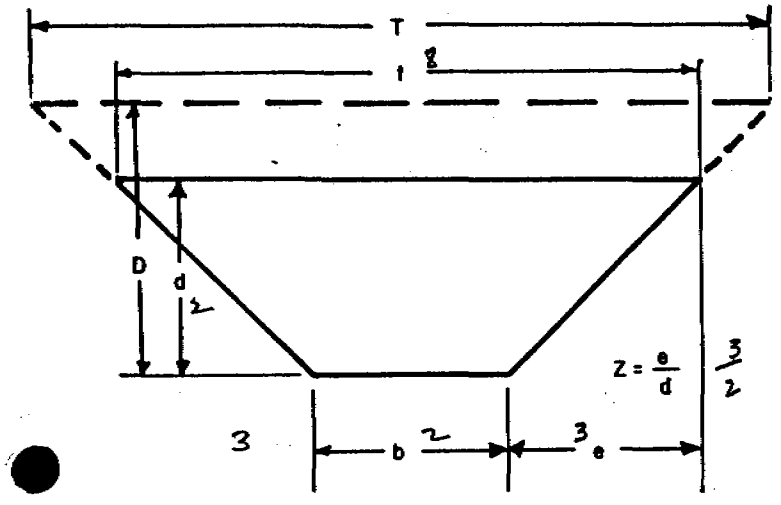

CHANNEL LOCATION CASTLE GATE D-4, CG-6

REQ'D PEAK FLOW 7 cfs

DESIGN WORKSHEET FOR TRAPEZOIDAL SHAPED CHANNEL

DATE 5/4/83

FACTOR VALUES

T ____ t 8

D ____ d 2

b 2 e 3

Z 1.5

FORMULAS

a = X-SECT. AREA = bd + Zd² = (2x2) + 1.5(2)² 10

p = WETTED PERIMETER = b + 2d√(Z²+1) = 2 + (2x2)√(1.5²+1) = 9.2

R = HYDRAULIC RADIUS = a/p 1.09

T/t = TOP WIDTH = b+2DZ / b+2dZ 8

V = VELOCITY (fps) = 1.486/n R^(2/3) S^(1/2) = 1.486/0.04 (1.09)^(2/3) (0.10)^(1/2) = 12.45

Q = CAPACITY (cfs) = aV 124 37.5 x 1.06 x 32

n = COEF. ROUGHNESS 0.04

S = SLOPE .10

CASTLE GATE

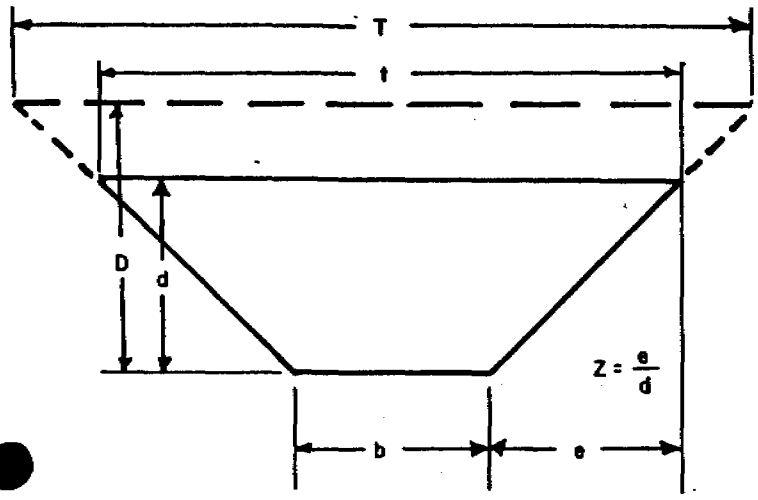

CHANNEL LOCATION C.G.
D-5-669A

REQ'D PEAK FLOW 294 cfs 100YR 24HRSTM.

DESIGN WORKSHEET FOR TRAPEZOIDAL SHAPED CHANNEL

DATE 5-4-83

FACTOR VALUES		FORMULAS	
T ____	t 20	a = X-SECT. AREA = $bd + Zd^2$	84 FT²
D ____	d 6	p = WETTED PERIMETER = $b + 2d\sqrt{Z^2+1}$	24.97
b 8	e 6	R = HYDRAULIC RADIUS = $\frac{a}{p}$	3.36
Z 1		T/t = TOP WIDTH = b+2DZ / b+2dZ	— / 20
		V = VELOCITY (fps) = $\frac{1.486}{n} R^{\frac{2}{3}} S^{\frac{1}{2}}$	14.71
		Q = CAPACITY (cfs) = aV	1235.5 cfs
		n = COEF. ROUGHNESS	0.032
		S = SLOPE	0.02

$8 + 2(6)\sqrt{1^2+1}$

1.4

$(46.43)(2.24)(.14)$

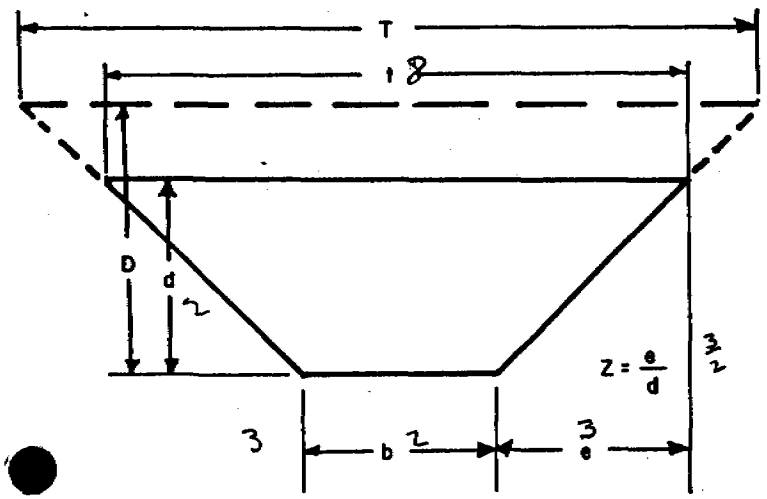

CHANNEL LOCATION CASTLEGATE
D-6, CG10

REQ'D PEAK FLOW 16.2 cfs

DESIGN WORKSHEET FOR TRAPEZOIDAL SHAPED CHANNEL

DATE 5/4/83

FACTOR	VALUES		
T		t	8
D		d	2
b	2	e	3
Z	1.5		

FORMULAS

a = X-SECT. AREA = $bd + Zd^2$ $(2\times2)+1.5(2)^2 = 10$

p = WETTED PERIMETER = $b + 2d\sqrt{Z^2+1}$ = $2+(2\times2)\sqrt{1.5^2+1}$ = 9.2

R = HYDRAULIC RADIUS = $\frac{a}{p}$ 1.09

T/t = TOP WIDTH = b+2DZ / b+2dZ 8

V = VELOCITY (fps) = $\frac{1.486}{n} R^{\frac{2}{3}} S^{\frac{1}{2}}$ = $\frac{1.486}{0.04}(1.09)^{2/3} * (0.16)^{1/2}$

Q = CAPACITY (cfs) = aV 15.7 $37.18 \times 1.06 \times 0.4 = 15.75$

n = COEF. ROUGHNESS 0.04

S = SLOPE .16

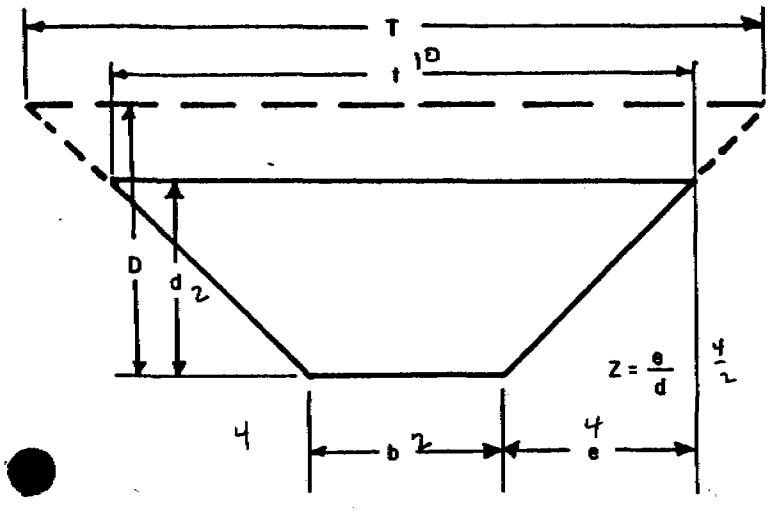

CHANNEL LOCATION CASTLE GATE
D-7 ½CG-4 MINUS CG-10

REQ'D PEAK FLOW 48 cfs

DESIGN WORKSHEET FOR TRAPEZOIDAL SHAPED CHANNEL

DATE 5/4/83

FACTOR VALUES		FORMULAS
T ____	t 10	a = X-SECT. AREA = $bd + Zd^2$ $(2\times2) + 2\times(2)^2$ = 12
D ____	d 2	p = WETTED PERIMETER = $b + 2d\sqrt{Z^2+1}$ = $2+(2\times2)\sqrt{2^2+1}$ = 10.9
b 2	e 4	R = HYDRAULIC RADIUS = $\frac{a}{p}$ 1.10
Z 2.0		T/t = TOP WIDTH = b+2DZ ____ / b+2dZ 10
		V = VELOCITY (fps) = $\frac{1.486}{n} R^{\frac{2}{3}} S^{\frac{1}{2}}$ = $\frac{1.486}{0.04}(1.10)^{2/3}(0.09)^{1/2}$
		Q = CAPACITY (cfs) = aV 143 37.15 × 1.07 × 0.3 = 11.9
		n = COEF. ROUGHNESS 0.04
		S = SLOPE 0.09

CASTLE GATE

DESIGN WORKSHEET FOR TRAPEZOIDAL SHAPED CHANNEL

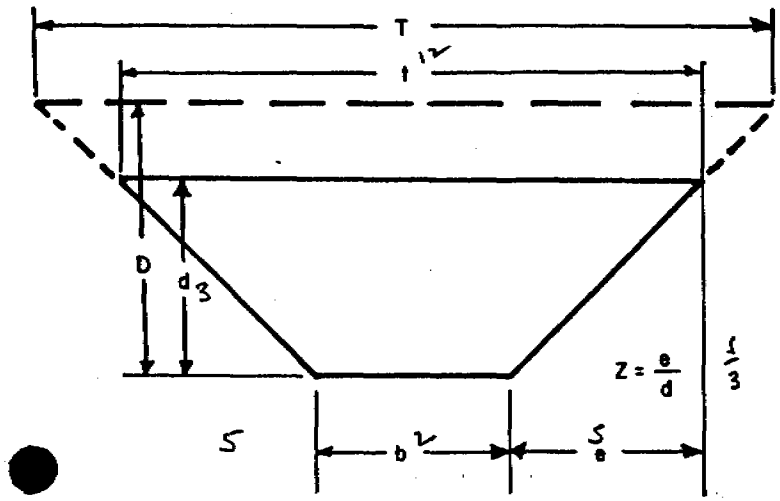

DATE 5/4/83

FACTOR VALUES			
T		t	12
D		d	3
b	2	e	5
z	1.67		

FORMULAS

a = X-SECT. AREA = $bd + Zd^2$ $(2 \times 3) + 1.67(3)^2$ = 21

p = WETTED PERIMETER = $b + 2d\sqrt{Z^2+1}$ = $2 + 2 \times 3\sqrt{1.67^2+1}$ = 13.68

R = HYDRAULIC RADIUS = $\frac{a}{p}$ 1.54

T/t = TOP WIDTH = b+2DZ / b+2dZ 12

V = VELOCITY (fps) = $\frac{1.486}{n} R^{\frac{2}{3}} S^{\frac{1}{2}}$ = $\frac{1.486}{0.04}(1.54)^{2/3}(0.12)^{1/2}$

Q = CAPACITY (cfs) = aV 36.3 37.15 x 1.33 x .25 = 17.29

n = COEF. ROUGHNESS 0.04

S = SLOPE 0.12

CHANNEL LOCATION CASTLE GATE/UTAH FUEL D-8, CG-3

REQ'D PEAK FLOW 27 cfs

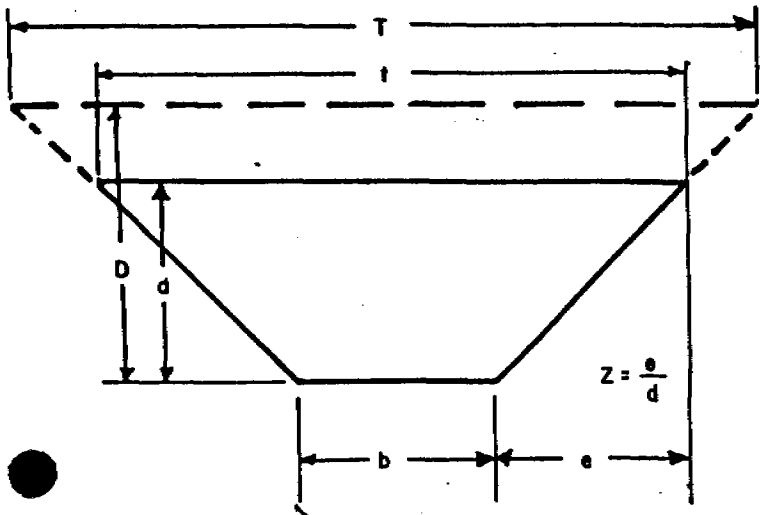

CHANNEL LOCATION D-9 - C.G. AREA
GRAVEL CANYON

REQ'D PEAK FLOW 2 cfs

DESIGN WORKSHEET FOR TRAPEZOIDAL SHAPED CHANNEL

DATE 5-27-83

FACTOR VALUES		FORMULAS	
T 8	t ____	a = X-SECT. AREA = $bd + Zd^2$	18 ft²
D 3	d ____	p = WETTED PERIMETER = $b + 2d\sqrt{Z^2+1}$	11.2
b 4	e 2	R = HYDRAULIC RADIUS = $\frac{a}{p}$	1.6
Z 0.67		T = TOP WIDTH = b+2DZ	8
		t = TOP WIDTH = b+2dZ	____
		V = VELOCITY (fps) = $\frac{1.486}{n} R^{\frac{2}{3}} S^{\frac{1}{2}}$	16.1
		Q = CAPACITY (cfs) = aV	290
		n = COEF. ROUGHNESS	0.040
		S = SLOPE	0.10

$4 + 2(3)\sqrt{.67^2+1}$

1.2

$4 + 7.22 = 11.2$

$(37.15)(1.37)(0.32)$

DESIGN WORKSHEET FOR TRAPEZOIDAL SHAPED CHANNEL

$(2\times1)+3(2)$
$2+3=5$

DATE 6/2/83

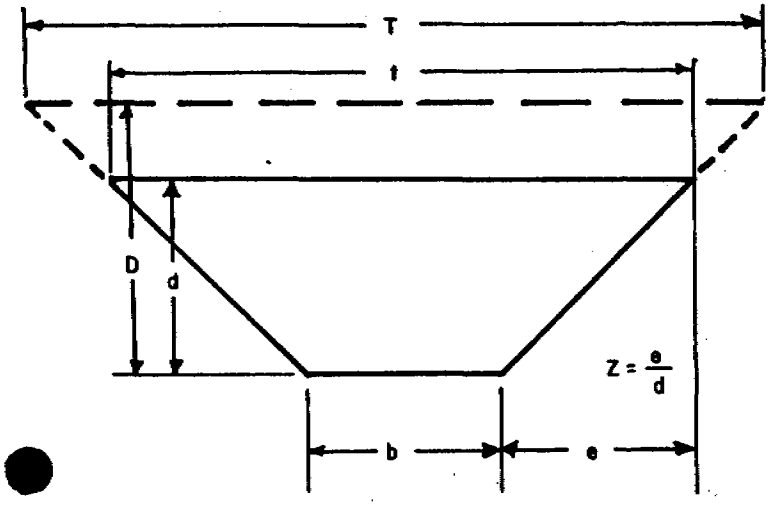

CHANNEL LOCATION CG 6,7
RC-1

REQ'D PEAK FLOW 30 cfs

FACTOR VALUES

T 8 t ____

D ____ d 1

b 2 e 3

Z 3

FORMULAS

a = X-SECT. AREA = $bd + Zd^2$ 5

p = WETTED PERIMETER = $b + 2d\sqrt{Z^2+1}$ $2+(2\times1)\sqrt{10} = 8.32$

R = HYDRAULIC RADIUS = $\frac{a}{p}$ 0.60

T, t = TOP WIDTH = $b+2DZ$ ____, $b+2dZ$ ____

V = VELOCITY (fps) = $\frac{1.486}{n} R^{\frac{2}{3}} S^{\frac{1}{2}}$ = $37.15 \times 0.71 \times 0.32 = 8.44$

Q = CAPACITY (cfs) = aV 42

n = COEF. ROUGHNESS 0.04

S = SLOPE 0.10

CASTLE GATE

DESIGN WORKSHEET FOR TRAPEZOIDAL SHAPED CHANNEL

$(6 \times 1.5) + 3(1.5^2)$
$9 + 6.75$

DATE 6/3/83

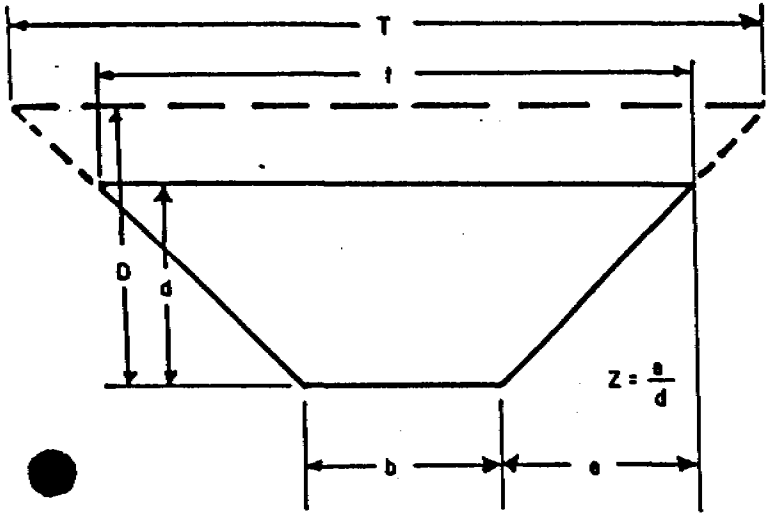

FACTOR VALUES

T 15 t ____

D 1.5 d ____

b 6 e 4.5

Z 3

FORMULAS

a = X-SECT. AREA = $bd + Zd^2$ 15.75

p = WETTED PERIMETER = $b + 2d\sqrt{Z^2+1}$ $6 + (2 \times 1.5)\sqrt{10} = 15.49$

R = HYDRAULIC RADIUS = $\frac{a}{p}$ 1.02

T / t = TOP WIDTH = $b + 2DZ$ ____ / $b + 2dZ$ ____

V = VELOCITY (fps) = $\frac{1.486}{n} R^{\frac{2}{3}} S^{\frac{1}{2}}$ = 37.15 × 1.01 × 0.22 = 8.25

Q = CAPACITY (cfs) = aV 130

n = COEF. ROUGHNESS 0.04

S = SLOPE 0.05

CHANNEL LOCATION CG 5,10 / RC-2

REQ'D PEAK FLOW 110 cfs

CASTLE GATE

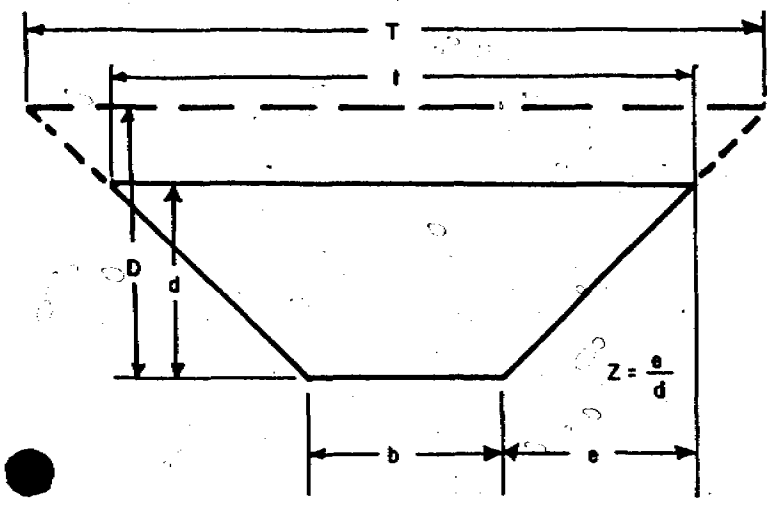

CHANNEL LOCATION Part CC.4
RC-3

REQ'D PEAK FLOW 89 cfs

DESIGN WORKSHEET FOR TRAPEZOIDAL SHAPED CHANNEL

$(6 \times 1.1) + 3(1.1^2)$
$6.6 + 3.6$

DATE 6/2/83

FACTOR VALUES

T 12.6 t ____
D 1.1 d 1.1
b 6 e 3.3
Z 3

FORMULAS

a = X-SECT. AREA = bd + Zd² 10.2

p = WETTED PERIMETER = $b + 2d\sqrt{Z^2+1}$ = $6 + (2 \times 1.1)\sqrt{10}$ = 12.96

R = HYDRAULIC RADIUS = $\frac{a}{p}$ 0.79

T/t = TOP WIDTH = b+2DZ ____ / b+2dZ ____

V = VELOCITY (fps) = $\frac{1.486}{n} R^{\frac{2}{3}} S^{\frac{1}{2}}$ = 37.15 · 0.85 × 0.30 = 9.47

Q = CAPACITY (cfs) = aV 97

n = COEF. ROUGHNESS 0.04

S = SLOPE 0.09

CA97NEOXYE

DESIGN WORKSHEET FOR TRAPEZOIDAL SHAPED CHANNEL

$(2\times1)+3(1^2)$
$2+3$

DATE 6/3/83

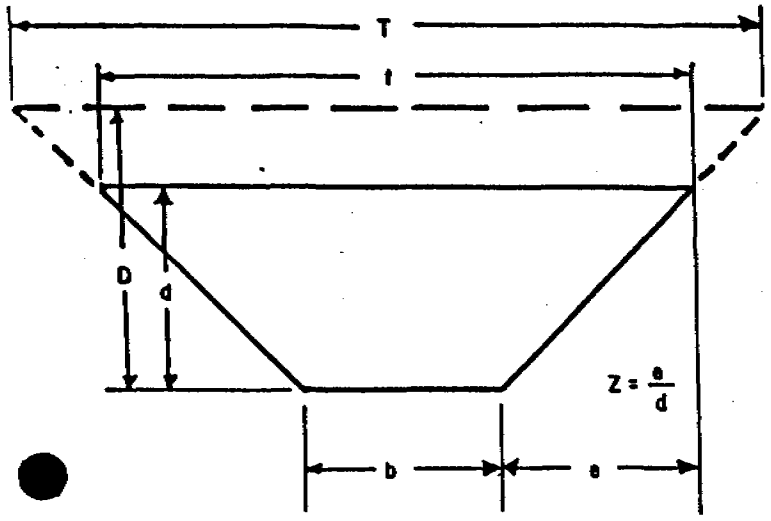

CHANNEL LOCATION CG-3 / RC-4

REQ'D PEAK FLOW 42 cfs

FACTOR VALUES

T 5 t ____

D 1 d ____

b 2 e 3

Z 3

FORMULAS

a = X-SECT. AREA = $bd + Zd^2$ 5

p = WETTED PERIMETER = $b + 2d\sqrt{Z^2+1}$ $2+(2\times1)\sqrt{10} = 8.32$

R = HYDRAULIC RADIUS = $\frac{a}{p}$ 0.60

T/t = TOP WIDTH = b+2DZ ____ / b+2dZ ____

V = VELOCITY (fps) = $\frac{1.486}{n} R^{\frac{2}{3}} S^{\frac{1}{2}}$ $= 37.15 \times 0.71 \times 0.39 = 10.28$

Q = CAPACITY (cfs) = aV 51

n = COEF. ROUGHNESS 0.04

S = SLOPE 0.15

2?

CASTLE GATE

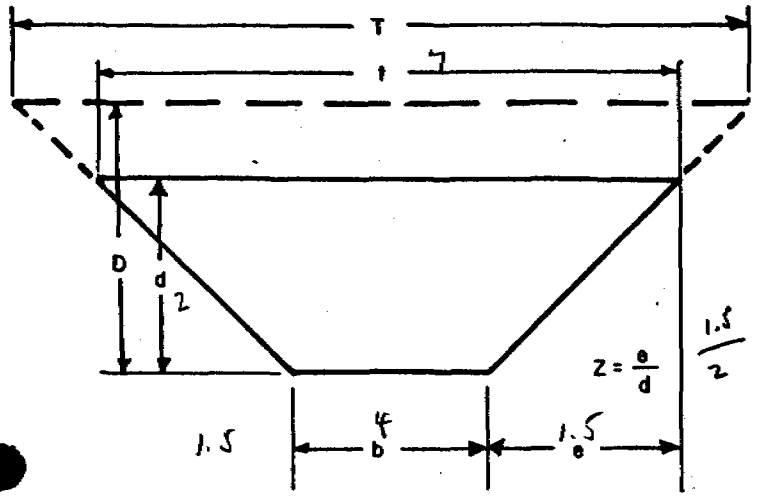

DESIGN WORKSHEET FOR TRAPEZOIDAL SHAPED CHANNEL

DATE 5/4/83

FACTOR VALUES

T ____ t 7

D ____ d 2

b 4 e 1.5

z 0.75

FORMULAS

a = X-SECT. AREA = $bd + Zd^2$ $(4 \times 2) + .75 \times (2)^2$ = 11

p = WETTED PERIMETER = $b + 2d\sqrt{Z^2+1}$ = $4 + (2 \times 2)\sqrt{0.75^2+1}$ = 9

R = HYDRAULIC RADIUS = $\frac{a}{p}$ 1.22

T / t = TOP WIDTH = b+2DZ ____ / b+2dZ 7

V = VELOCITY (fps) = $\frac{1.486}{n} R^{\frac{2}{3}} S^{\frac{1}{2}}$ = $\frac{1.486}{0.04} \times (1.22)^{2/3} (0.05)^{1/2}$

37.15 x 1.14 x 0.223

9.47

Q = CAPACITY (cfs) = aV 104

n = COEF. ROUGHNESS 0.04

S = SLOPE 0.05

CHANNEL LOCATION Willow Ck, D1, WC-2 & WC-3

REQ'D PEAK FLOW 81 cfs

Willow Ck.

DESIGN WORKSHEET FOR TRAPEZOIDAL SHAPED CHANNEL

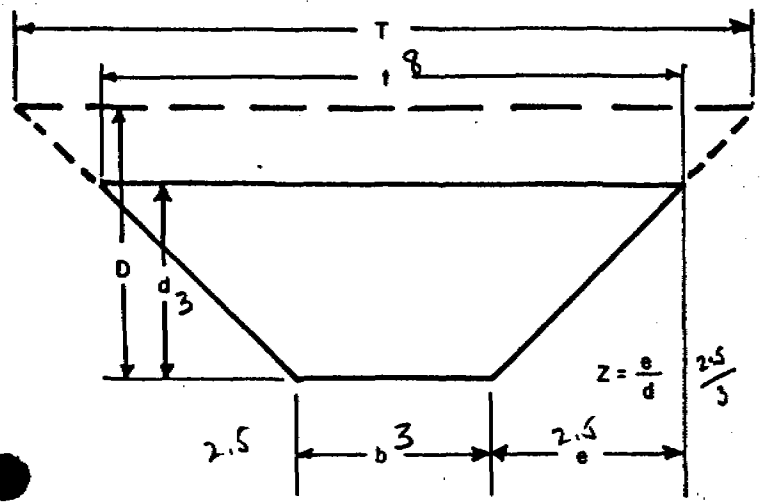

DATE 5/4/83

FACTOR VALUES

T ____ t 8'

D ____ d 3'

b 3' e 2.5

Z 0.83

FORMULAS

a = X-SECT. AREA = $bd + Zd^2$ $(3\times3)+0.83\times(3)^2$ = 16.5

p = WETTED PERIMETER = $b + 2d\sqrt{Z^2+1}$ = $3+(2\times3)\sqrt{0.83^2+1}$ = 10.8

R = HYDRAULIC RADIUS = $\frac{a}{p}$ 1.53

T/t = TOP WIDTH = b+2DZ ____ / b+2dZ 8

V = VELOCITY (fps) = $\frac{1.486}{n} R^{\frac{2}{3}} S^{\frac{1}{2}}$ = $\frac{1.486}{0.04}(1.53)^{2/3}(0.04)^{1/2}$

Q = CAPACITY (cfs) = aV 162 $32.15 \times 1.328 \times 0.2$ = 9.87

n = COEF. ROUGHNESS 0.04

S = SLOPE 0.06

CHANNEL LOCATION WILLOW CK D-2, ½ WC-2

REQ'D PEAK FLOW 12 cfs

WILLOW CK

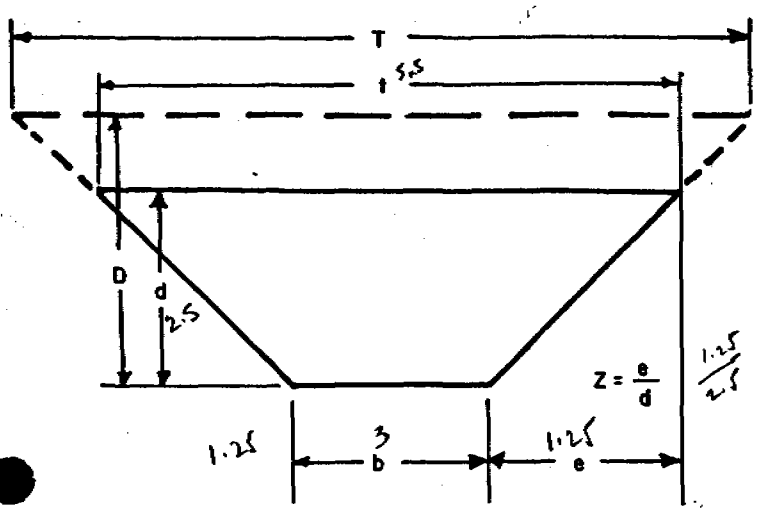

CHANNEL LOCATION Willow Ck, D-3, WC-1

REQ'D PEAK FLOW 27 cfs

DESIGN WORKSHEET FOR TRAPEZOIDAL SHAPED CHANNEL

DATE 5/4/83

FACTOR VALUES

T ____ t 5.5

D ____ d 2.5

b 3' e 1.25

Z 0.5

FORMULAS

a = X-SECT. AREA = $bd + Zd^2$ $(3\times2.5)+0.5(2.5)^2$ = 10.63

p = WETTED PERIMETER = $b + 2d\sqrt{Z^2+1}$ $3+(2\times2.5)\sqrt{.5^2+1}$ = 8.59

R = HYDRAULIC RADIUS = $\frac{a}{p}$ 1.24

T/t = TOP WIDTH = b+2DZ / b+2dZ 5.5

V = VELOCITY (fps) = $\frac{1.486}{n} R^{\frac{2}{3}} S^{\frac{1}{2}}$ = $\frac{1.486}{0.04}(1.24)^{2/3}(0.05)^{1/2}$ 37.15 x 1.15 x 0.22 = 8.99

Q = CAPACITY (cfs) = aV 95

n = COEF. ROUGHNESS 0.040

S = SLOPE 0.05

Willow Ck

WILLOW CK AREA

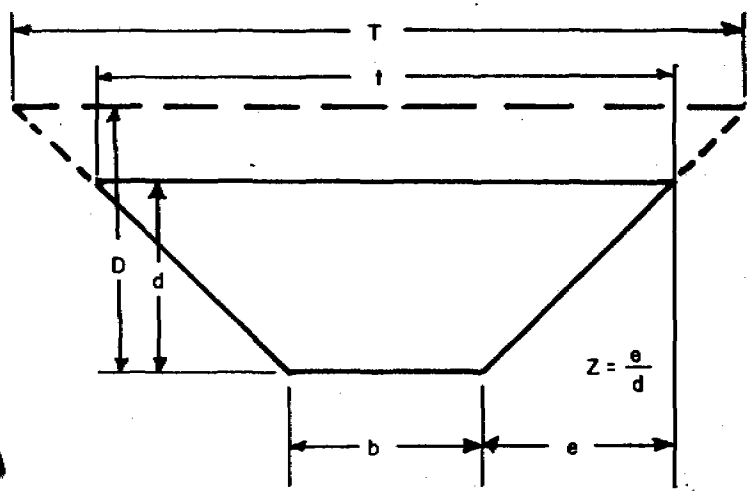

CHANNEL LOCATION WC 2-3
RC-1

REQ'D PEAK FLOW 131 cfs

DESIGN WORKSHEET FOR TRAPEZOIDAL SHAPED CHANNEL

$(6 \times 2) + 3(2^2)$
$12 + 12$

DATE 6/2/83

FACTOR VALUES		FORMULAS
T 18	t ____	a = X-SECT. AREA = $bd + Zd^2$ 24
D 2	d ____	p = WETTED PERIMETER = $b + 2d\sqrt{Z^2+1}$ $6+(2\times2)\sqrt{10} = 18.65$
b 6	e 6	R = HYDRAULIC RADIUS = $\frac{a}{p}$ 1.29
Z 2		T = TOP WIDTH = b+2DZ ____
		t = TOP WIDTH = b+2dZ ____
		V = VELOCITY (fps) = $\frac{1.486}{n} R^{\frac{2}{3}} S^{\frac{1}{2}}$ $37.15 \times 1.19 \times 0.14 = 6.19$
		Q = CAPACITY (cfs) = aV 148
		n = COEF. ROUGHNESS 0.04
		S = SLOPE 0.02

WILLOW CK

WILLOW CK. AREA

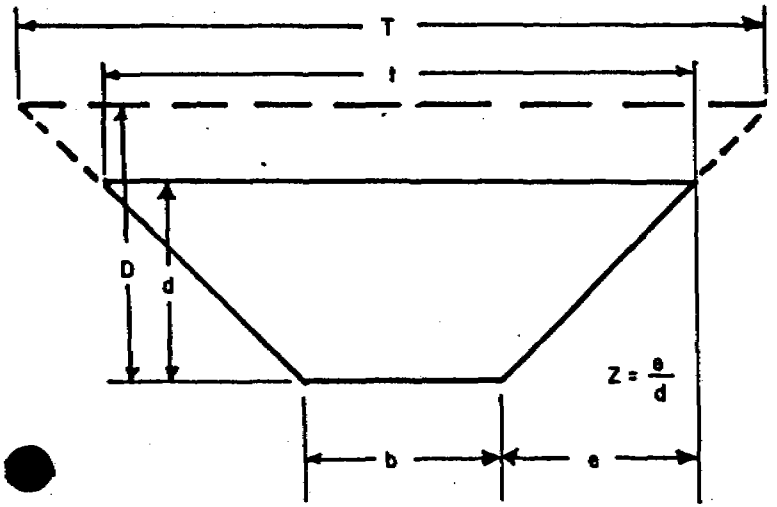

DESIGN WORKSHEET FOR TRAPEZOIDAL SHAPED CHANNEL

RHW

DATE 6-7-83

FACTOR	VALUES		
T	18	t	
D	2	d	
b	6	e	6
Z	3		

FORMULAS

a = X-SECT. AREA = $bd + Zd^2$ 24

p = WETTED PERIMETER = $b + 2d\sqrt{Z^2+1}$ 18.65

R = HYDRAULIC RADIUS = $\frac{a}{p}$ 1.29

T, t = TOP WIDTH = $b+2DZ$ 18 / $b+2dZ$

V = VELOCITY (fps) = $\frac{1.486}{n} R^{\frac{2}{3}} S^{\frac{1}{2}}$ 10.7

Q = CAPACITY (cfs) = aV 257.7 cfs

n = COEF. ROUGHNESS 0.04

S = SLOPE 0.06

CHANNEL LOCATION WC-1, JAP CANYON / RC-2

REQ'D PEAK FLOW 147 cfs

(37.15)(1.18)(0.295)

JAP CANYON: 67 ACRES

5 MIN. Tc

1000 YR STM = 106 CFS

WILLOW CK

Subsidence

The information on the prevention of subsidence impacts must include a discussion on the measures to be taken to prevent subsidence in areas to be mined under the rivers and roads. In these areas, the applicant is planning to mine but will leave the pillars. It was mentioned in the applicant's submittal that it is pillar deterioration that creates the most severe subsidence impacts. However, it was previously mentioned that coal pillars which have been left by mining in the 1920's at PRCC in the seams proposed to be mined have shown little if any deterioration. Also plans for superimposing pillar location in each of the seams were proposed. Finally, a discussion was held on the size of the pillars that were proposed to be left. The applicant stated that the size of the pillars would be determined as mining progressed and designed according to mining conditions encountered.

To complete the subsidence section, information must be provided to demonstrate pillar stability in the seams to be mined under the rivers and roads. Pillar location, and the method which will be utilized to determine pillar size and maximum entry opening in the areas where pillars will be left must be included as part of this demonstration.

With respect to subsidence monitoring, the applicant must state that monitoring will occur in the areas where mining will occur under roads and locate the monitoring sites on a map. This monitoring must commence prior to any mining in the areas where pillars are to remain, as defined by the angle of draw.

Per previous plans and discussions, the following are submitted:

1. Pillar size under rivers and roads - the enclosed graph will be used as a basis for minimum size of pillars. Actual size will be determined on a site specific basis, giving consideration to geology, location of springs, cliff faces, etc. in the vicinity.

2. Maximum room or entry width will be 20', per MSHA approved roof control plan.

3. Previously submitted information shows that no second mining will be done within an angle of draw of 45° in these critical areas.

4. Mining in the Kenilworth Seam under Willow Creek and State highway number 33, was accomplished with no subsidence. Cover varied from 100' - 1,100', seam height 20' - 25', with one panel actually being second-mined, under the river and road. Various pillar sizes were left - as scaled from a larger scale map, at 70', 90', 100', 110' and 150' long, 60' and 70' centers, and 20' entry width. Such random pillar sizes, in our estimation, is the worst possible combination to avoid subsidence. The only reasonably geometric layout left pillars 40' x 40' with 20' entries. All of this was accomplished with no ill effects on the stream or the road!

5. In the "D" Seam under the Price River, Highway 6, and the D&RGW railroad tracks, it can be seen that somewhat similar conditions exist. One mine used an entry spacing of 60' centers, leaving 30' x 50' pillars in one

place, in another 40' x 50' pillars were left - main entries 15' wide, rooms 20' wide, seam height 10', with cover varying from 20' to 400'. At another mine, 50' x 60' pillars were left, 20' entries, 18' seam height, and cover ± 900'.

6. Ordinary good mining practice dictates that entries and pillars should be "stacked" wherever possible.

7. We are at a somewhat of a loss to understand the statement that "pillar deterioration creates the most severe subsidence impacts". The only "pillar deterioration" that may have occurred on this property would be in the old Royal Mine. This area was longwalled in the Sub 3 Seam after old room and pillar operations in the "D" Seam and the largest surface subsidence noted to date subsequently occurred. This area was quite remote from any river or public road.

8. It is somewhat amusing and also disconcerting that a company would be asked to state "monitoring will occur in the areas where mining will occur under roads, and locate the monitoring sites on a map". Perhaps coal company personnel are not too bright, but they are not completely stupid! Since a coal company is probably liable for anything that anyone can dream up as even a remote possibility, prudent business sense dictates that they protect themselves in such cases. Monitoring sites will be established when and where mining is to take place under rivers and roads. The map location of monitoring sites is contingent upon the mining taking place as now planned, <u>and</u> and the concurrence of the surface right of way owners. Would it be completely out of the realm of possibility to give the mining companies credit for having a <u>little</u> bit of common sense and good judgment? If that were to be done, it would eliminate reams of paperwork and extra cost both to the RA and the companies. No company can cope with a river running into the mine - nor can they afford to compensate the State for subsiding a highway, or the railroad for subsiding their main line. These things are obvious, as is also the fact that any project can be "What ifed" to death. It is our conviction that what we have proposed pertaining to subsidence, over an area that has been mined for nearly 100 years, with a surface consisting of 99.9% "goat pasture" (not our teminology) and the other 0.1% of critical structures, should be sufficient for all concerned.

Attachments: Graph for Determining Pillar Size
Mining Under Price Canyon - Map
Mining Under Willow Creek - Map
Map of Proposed Monitoring Points - Price Canyon
Map of Proposed Monitoring Points - Willow Creek

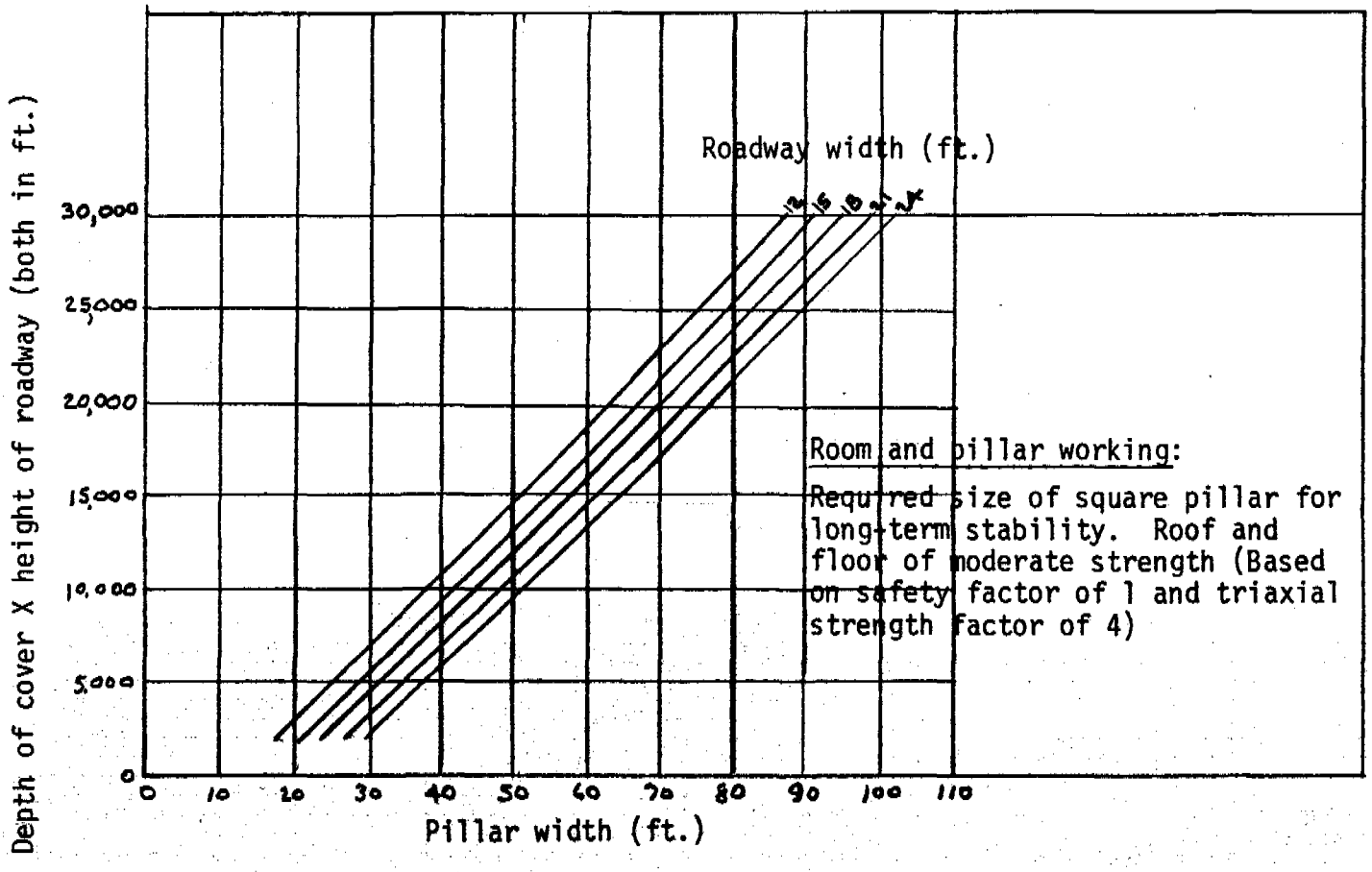

PILLAR SIZES IN ROOM AND PILLAR WORKING

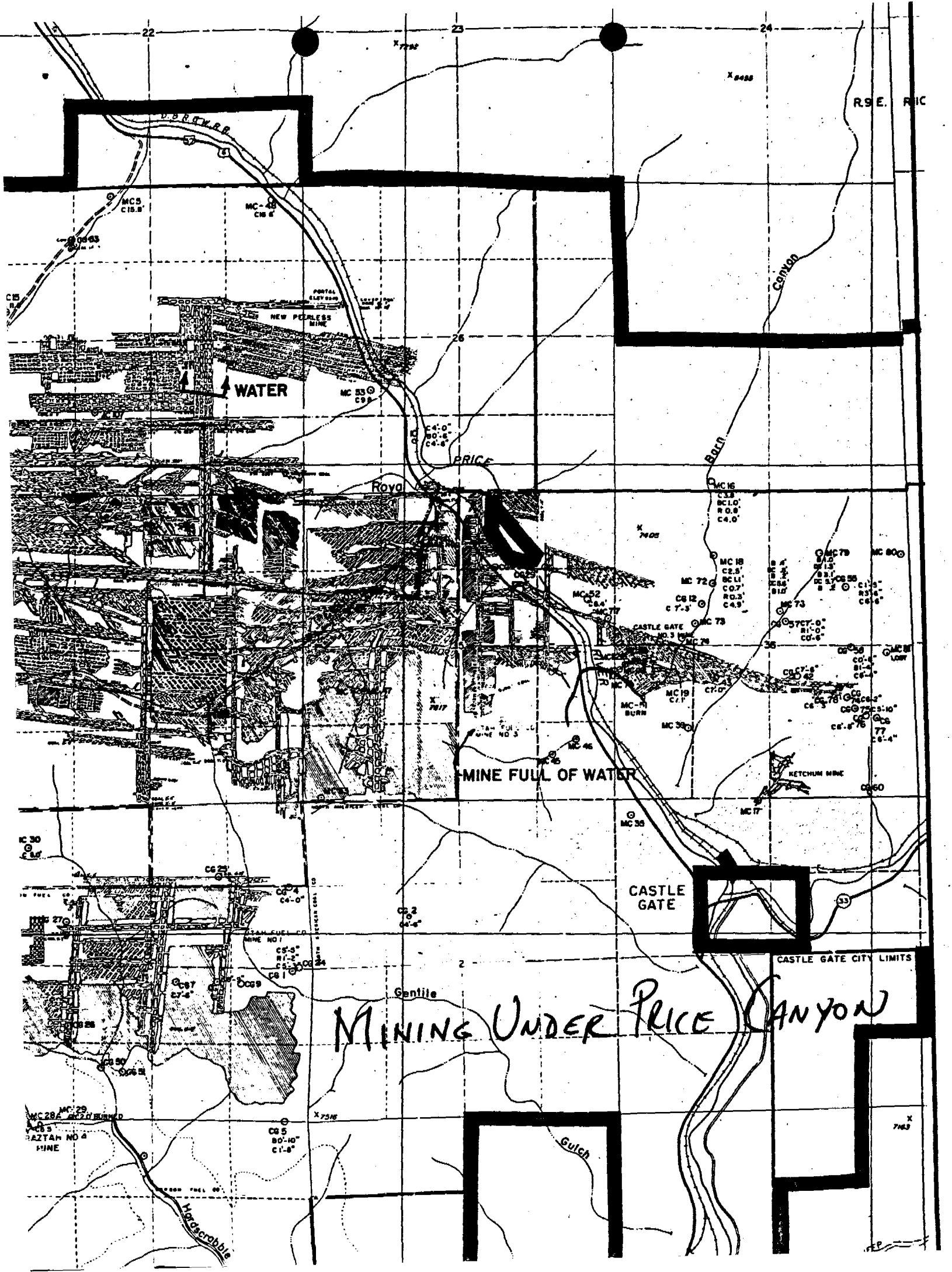
WATER
MINE FULL OF WATER
CASTLE GATE
CASTLE GATE CITY LIMITS
MINING UNDER PRICE CANYON
PRICE
Royal
Canyon
Barn
Gulch
Gentile
Hardscrabble
NEW PEERLESS MINE
KETCHUM MINE
CASTLE GATE NO. 3 MINE
R.9 E.

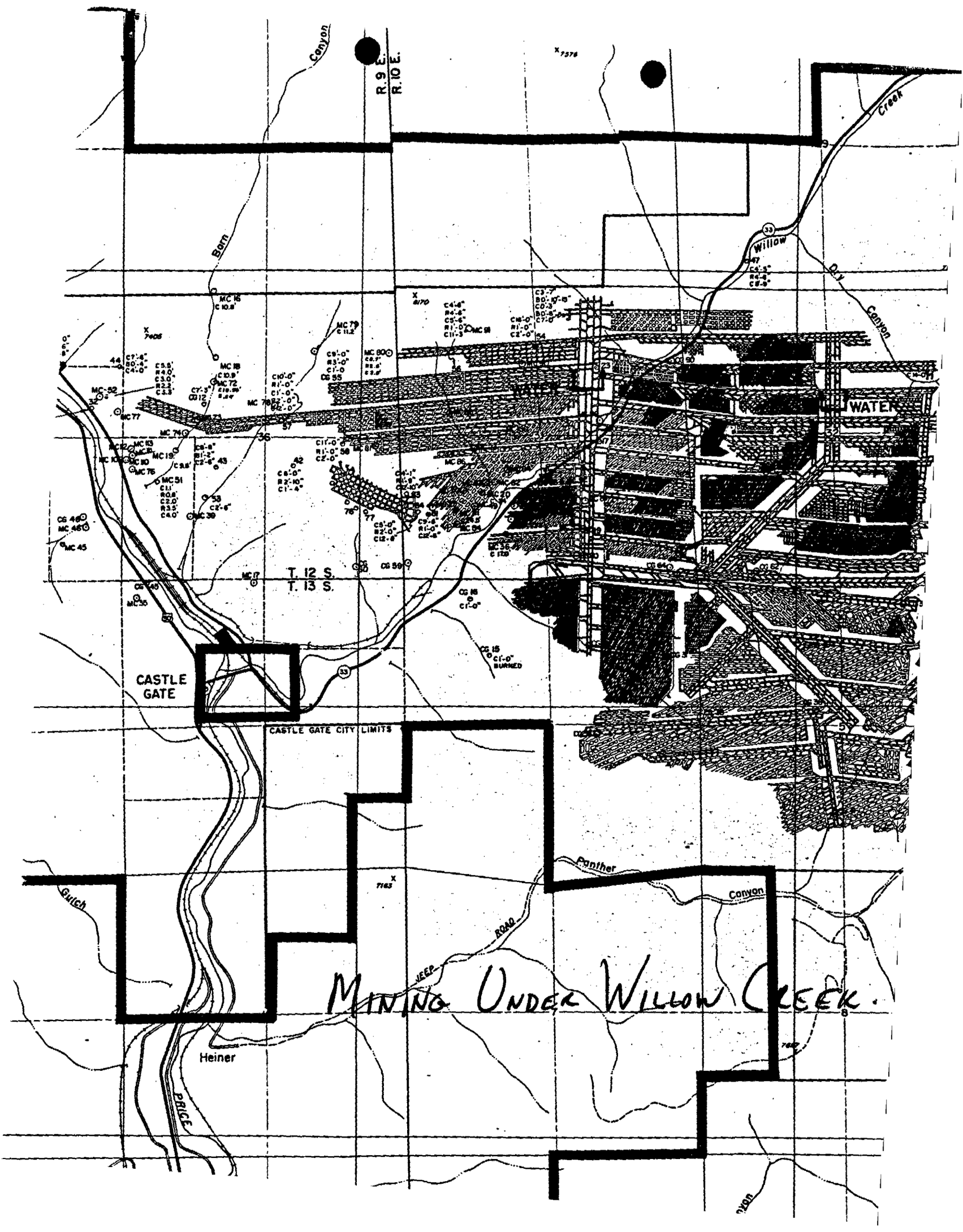
R.9 E.
R.10 E.
Canyon
Barn
Willow
Creek
Dry
Canyon
WATER
WATER
T. 12 S.
T. 13 S.
CASTLE GATE
CASTLE GATE CITY LIMITS
Panther
Canyon
Gulch
JEEP ROAD
Heiner
PRICE
MINING UNDER WILLOW CREEK.

Stability of Postmining Slopes

The stability of the roadcut slope at the No. 5 Mine (colluvium - 40 degrees) and the No. 3 Mine refuse pile (25 - 30 degrees) must be addressed. These slopes must be shown to have a 1.3 static safety factor after final reclamation has occurred. If the safety factor cannot be met as proposed, a plan for stabilization of the slopes must be developed.

This point was further clarified during a phone conversation on 7-27-83 with D. Richardson. There was some question as to why we sent pictures of these particular slopes. These are within designated permit areas and to some extent part of present operations. Some will be backfilled, some will be left as is. Others may be backfilled partially as necessary to seal portals.

The two slopes specifically mentioned will both be altered to flatter configurations.

The slope in Sowbelly Canyon is not a road cut but a toe of slope cut within the pad area. It ranges to a maximum of 12' height. It will be backfilled to a 2:1 or flatter slope.

The slope of the old refuse is about 2:1. The entire area will be recontoured during reclamation which will occur this and next year. We will try to obtain a maximum slope (in refuse) of about 2.5:1. Should this not be possible, some compacting effort will be applied so as to achieve the 1.3 safety factor.