**Phase I Bond Release**
**Sowbelly Gulch No. 5 Mine Substation Area**
**Castle Gate Holding Company**
**Castle Gate Mine**
**C/007/004**

**April 2004**

RECEIVED
JUN 13 2005
DIV. OF OIL, GAS & MINING

**TABLE 3.1-2**

**SUMMARY OF BONDING AND RECLAMATION COSTS**

| SITE | DISTURBED ACRES | BONDING AMOUNT |
|---|---|---|
| Sowbelly Canyon (Gulch) | 21 | 168,000 (a) |
| Hardscrabble Canyon | 39 | 267,000 (a) |
| Adit No. 1 | 3 | 129,054 (b) |
| TOTAL | 63 | 564,057 |

**(a) Bond in 2009 dollars**
**(b) Bond in 2004 dollars**

# SECTION 3.2

# SOWBELLY CANYON

## TABLE OF CONTENTS

Section | Page

3.2 SOWBELLY CANYON . . . . . 3.2-1

3.2-1 General . . . . . 3.2-1

3.2-2 Description of the Facility . . . . . 3.2-1

3.2-3 Potential Future Development . . . . . 3.2-3

3.2-4 Environmental Protection: Drainage Controls and Sanitary Facilities . . . . . 3.2-3

3.2-4(1) Drainage Controls . . . . . 3.2-3

3.2-4(1)A Storm Runoff Calculations . . . . . 3.2-4
3.2-4(1)B Diversion Structures . . . . . 3.2-5
3.2-4(1)C Sedimentation Ponds . . . . . 3.2-6

3.2-4(2) Sanitary Facilities . . . . . 3.2-6

3.2-5 Reclamation Plan . . . . . 3.2-7

3.2-5(1) Reclamation Work . . . . . 3.2-7
3.2-5(2) Reclamation Hydrology . . . . . 3.2-11
3.2-5(3) Reclamation Sedimentation Ponds . . . . . 3.2-14
3.2-5(4) Alternative Sediment Control Measures . . . . . 3.2-18

3.2-6 Reclamation Timetable . . . . . 3.2-19

3.2-7 Reclamation Costs . . . . . 3.2-20

3.2-8 Stream Buffer Zone . . . . . 3.2-20

3.2-9 Transportation Facilities . . . . . 3.2-21

3.2-10 As-Built Reclamation Features . . . . . 3.2-21

## LIST OF FIGURES

FIGURE 3.2-1 CURVE NUMBER GRAPHS (SCS)

## LIST OF APPENDICES

APPENDIX 3.2A UNDISTURBED AREA RUNOFF CALCULATIONS

APPENDIX 3.2B SOIL SAMPLING PROGRAM

APPENDIX 3.2C RIP-RAP MEASUREMENTS AND CERTIFICATIONS

APPENDIX 3.2D RIP-RAP FILTER BLANKET EVALUATION

APPENDIX 3.2E RECLAMATION HYDROLOGY DRAINAGE STRUCTURES CALCULATIONS

APPENDIX 3.2F SLOPE STABILITY ANALYSIS

APPENDIX 3.2G RECLAMATION AS-BUILT HYDROLOGY CALCULATIONS

APPENDIX 3.2H RECLAIMED CHANNEL CERTIFICATIONS

APPENDIX 3.2I RECLAMATION ALTERNATE SEIMENT CONTROL MEASURES - SUMMARY AND CALCULATIONS

APPENDIX 3.2J MONITORING NETWORK

APPENDIX 3.2K PUBLIC NOTICE AND AGENCY AND LAND OWNER LETTERS

Access Road ( A-2 ) - The access road has also been eliminated and regraded during the 1995 reclamation improvements.

Berms - Berms directing drainage to the ponds have been eliminated.

Rip-rap Soiling - In areas where rip-rap was replaced or repaired, approximately 6 inches of soil was placed over the rip-rap and reseeded. This will serve 2 purposes: (1) to fill voids within the rip-rap, and (2) to promote vegetation and channel stability. This procedure was used primarily on channel sections SBRD-1B and SBRD-1C, and on all of SBRD-4.

Deep Gouging - The entire regraded surface area has been deep gouged with 2 tons per acre of hay mulch incorporated during gouging using the trackhoe bucket. The areas were then reseeded and mulched with 1 ton per acre of straw. This procedure is intended to promote water retention and vegetation and minimize erosion and sediment transport off-site.

Culvert SBRC-4 - This culvert was removed along with access road A-2.

Low Areas - Low areas along channel SBRD-1 have been regraded, and all slopes now drain to the reclaimed channels.

The entire reclaimed area has been surveyed, and existing reclamation treatments and conditions are shown on Exhibits 3.2-13 and 3.2-14, respectively. All reclaimed channels have also been surveyed. Channel cross-sections are shown on Exhibit 3.2-15 and profiles are shown on Exhibit 3.2-16 except for the substation area Cross-sections and profiles for SBRD-3 and SBRD-5 can be found in Appendix 3.2G. Channel certifications are provided in Appendix 3.2H.

Rip-rap sizes and depths have also been verified in the field. Certification statements for the various ditch sections and rip-rap, except for the substation area, are provided in Appendix 3.2C. Certification statements for the ditch sections and rip-rap in the substation area are provided in Appendix 3.2G.

Detailed reclamation hydrology data is provided in Tables 3.2-2 through 3.2-9. Reclamation "As-Built" Hydrology calculations are provided in Appendix 3.2G.

Filter Blanket - Soil tests were performed on all ditch sections in 1994 by EarthFax Engineering, Inc., and previously provided to the Division. Based on these tests, filter blanket was required only on the areas of SBRD-1 using the larger rip-rap. Therefore, the only areas of reclaimed channel which have filter blanket beneath the rip-rap are sections SBRD-1A, SBRD-1B, and SBRD-1C. In all other reclaimed channels, and on section SBRD-1D, the rip-rap was placed directly on the native soil. (See Appendix 3.2D).

Substation Area - This area was reclaimed in 2002. The affected area was reshaped, mulched with approximately 2-ton per acre of noxious weed-free hay, deep gouged, reseeded, mulched with approximately 1.5 ton per acer noxious weed-free straw and 500 pounds per acre of a hydromulch and tackifier mix.

SBRD-5 - This diversion was constructed along the entire slope, thereby removing the need for the installation of culvert SBRC-2.

SBRD-3 - This diversion was also extended thereby removing the need for the installation of culvert SBRC-3.

SBRD-6 - This diversion was constructed.

SBRD-7 - This diversion was divided into two segments, 7A and 7B, to account for an additional watershed due to the existing culvert SBRC-1 being located further down the county road.

As-built reclamation conditions and certification of diversions and culverts is presented in Appendix 3.2 G. The location of the reclamation features is shown on Exhibit 3.2-13. As with the rest of the reclaimed site, no cross-sections have been generated for the substation area.

### 3.2-5(4) Alternate Sediment Control Measures

After the initial reclamation was performed in 1993-1994, a number of deficiencies remained unresolved, preventing issuance of Phase I Bond Release. Based on discussions with UDOGM, the company agreed to re-reclaim a substantial portion of the site. This reclamation was completed in 1995, and included the following significant items:

(1) Reconstruction and/or repair of most of reclaimed channel SBRD-1 and all of SBRD-4;
(2) Removal of Reclaimed Ponds 016 and 017;
(3) Removal of the temporary access road ( A-2);
(4) Regrading of approximately 75% of the reclaimed site;
(5) Heavy surface roughening with hay mulch incorporation of the reclaimed areas;
(6) Broadcast reseeding and straw mulching of the re-reclaimed areas.

The main effect of the elimination of the sedimentation ponds and re-reclamation was to convert the entire reclaimed site into an Alternate Sediment Control Area or ASCA. The alternate sediment control has been accomplished by the application of the following methods:

(1) Deep surface ripping and roughening;
(2) Mulch and/or chemical tacifier;
(3) Erosion control netting ( upper road );

Each of the separate areas and treatment methods are shown on Exhibit 3.2-13.

A summary and calculations for the "As-Built" Alternate Sediment Control measures is

provided in Appendix 3.2I.

The alternate sediment controls constructed during Phase II reclamation will be inspected quarterly or after every major storm event. Observations made during these inspections, as well as corrective actions taken, will be recorded. Corrections to any weaknesses in the implementation of the sediment control plan will be remedied immediately to prevent future sediment runoff into the main stream channel. Corrective action will be taken when a gully greater than nine inches in depth is created due to lack of vegetation establishment. Corrective action will consist of regrading of the ground surface only as necessary to fill in nine inch gullies caused by erosion, and reseeding and mulching, as necessary, to re-establish vegetation.

As part of the reclamation of the substation area culvert SBRC-2 was replaced by an extension of channel SBRD-5 and culvert SBRC-3 was replaced by an extension of channel SBRD-3.

### 3.2-6 Reclamation Timetable

| | |
|---|---|
| **Phase I** | |
| 1. Demolition-structure removal | Completed Fall 1988 |
| 2. Portal sealing | Completed Fall 1988 |
| **Phase II** | |
| 3. Installation of reclamation sediment control structures | Completed Summer 1994 |
| 4. Grading and removal of Ponds 003, 004 and 005 | Completed Summer 1994 |
| 5. Soil Testing | Completed Summer 1995 |
| 6. Addition of soil amendments Removal or burial of toxic and acid forming material | Completed Fall 1995 |
| 7. Seed bed preparation | Completed Fall 1994 |
| 8. Seeding and mulching | Completed Fall 1994 |

| | |
|---|---|
| 9. Reclamation to resolve deficiencies prior to Phase I Bond Release. | Completed Fall 1995 |
| **Phase III** | |
| 9. Vegetation and pond maintenance | Until vegetation is established |
| 10. Reclamation and water quality monitoring | Until bond release |
| **Phase IV** | |
| 12. Reclamation of electrical substation area, including grading, seeding and mulching | Completed Fall 2002 |
| 13. Monitoring of substation reclamation | Until bond release |

### 3.2-7 Reclamation Costs

Reclamation costs are included in Section 3.1-10, Table 3.1-2.

### 3.2-8 Stream Buffer Zone

Castle Gate Mine has Valid Existing Rights to perform underground mining and reclamation activities within 100 feet of the Sowbelly Canyon Stream Buffer Zone. The original construction within 100 feet of the intermittent stream was done prior to SMCRA. The latest construction consists of the reclamation of the main channel. However, if a disturbance is planned in an area not presently within the disturbed area boundary and falling within a stream buffer zone, then a variance will be applied for, as required by R645-301-731-600.

### 3.2-9 Transportation Facilities

Castle Gate Mine has Valid Existing Rights to perform underground mining and reclamation activities within 100 feet of a public road. The construction of the Sowbelly Canyon Facilities was begun prior to the advent of SMCRA. The construction includes all the facilities shown on Exhibit

## TABLE 3.2-8

## SOWBELLY CANYON
## RECLAMATION AS-BUILT HYDROLOGY CHANNEL SUMMARY

| RECLAMATION DIVERSION DITCH | MINIMUM BOTTOM WIDTH (FT) | SIDE SLOPE H:V | MINIMUM DEPTH (FT.) | MAXIMUM SLOPE (%) | MINIMUM SLOPE (%) | MAXIMUM FLOW DEPTH (FT.) | FREE-BOARD (FT.) | MAXIMUM VELOCIY (FPS) |
|---|---|---|---|---|---|---|---|---|
| SBRD-1A | 11 | 2.2:1 | 2.8 | 17.06 | 17.06 | 1.26 | 1.54 | 14.67 |
| SBRD-1B | 10.4 | 2.0:1 | 2.8 | 6.00 | 4.76 | 1.85 | 0.95 | 10.52 |
| SBRD-1C | 10 | 2.0:1 | 2.6 | 10.73 | 7.27 | 1.66 | 0.92 | 13.21 |
| SBRD-1D | 10 | 2.0:1 | 2.5 | 5.40 | 3.33 | 1.78 | 0.75 | 11.85 |
| SBRD-2 | 4 | 2.0:1 | 1.2 | 16.24 | 6.06 | 0.15 | 1.07 | 3.81 |
| SBRD-3[1] | 3.75 | 1.8:1 | 1.2 | 25.0 | 4.0 | 0.19 | 1.01 | 3.81 |
| SBRD-4 | 3.5 | 1.67:1 | 1.0 | 20.61 | 6.00 | 0.27 | 0.73 | 5.83 |
| SBRD-5[1] | 4.0 | 1.7:1 | 0.75 | 40.0 | 16.70 | 0.09 | 0.66 | 3.20 |
| SBRD-6[1] | 0.0 | 15/2:1 | 1.0 | 8.0 | 4.40 | 0.15 | 0.85 | 2.32 |
| SBRD-7A[1] | 2.0 | 10/2:1 | 1.0 | 6.70 | 4.40 | 0.22 | 0.78 | 2.69 |
| SBRD-7B[1] | 3.0 | 13/2.7:1 | 0.75 | 7.0 | 4.0 | 0.18 | 0.57 | 2.71 |
| *SBRD-8 | 3.5 | 1.5:1 | 1.3 | 7.14 | 6.09 | 2.45 | 0.00 | 14.51 |
| SBRD-9 | 8 | 2.0:1 | 1.5 | 4.72 | 4.72 | 1.31 | 0.19 | 9.36 |
| SBRD-10 | 6 | 2.0:1 | 1.5 | 6.57 | 6.57 | 0.37 | 1.13 | 5.44 |

* See Appendix 3.2H
[1]See Addendum to Appendix 3.2G

## TABLE 3.2-9

## SOWBELLY CANYON
## RECLAMATION AS-BUILT HYDROLOGY
## CULVERT SUMMARY

| CULVERT | CONTRIBUTORY WATERSHEDS | TOTAL DRAINAGE AREA (ACRES) | DESIGN DISCHARGE [d] (CFS) | SIZE (CMP) | INLET TYPE | SLOPE (%) | PEAK VELOCITY (FPS) | RIPRAP REQUIRED[a] D50 (IN) |
|---|---|---|---|---|---|---|---|---|
| SBRC-1[a] | SBRWS-U1,U2,U12 | 27.1 | 1.75[e] | 36" | PROJ. | 1 | 2.6 | NONE |

[a] Operational phase culvert SBC-10 renamed SBRC-1.
[d] Peak discharge flow calculated using the 10 year-6 hour storm event.
[e] Culvert has the capacity to pass the peak flow from a 100 year-6 hour storm event.

Note: SBRC-2 was replaced by extension of channel SBRD-5. SBRC-3 was replaced by extension of channel SBRD-3.

April 2005

Chapter 3, Section 3.2
Castle Gate Mine
Sowbelly Canyon

# ADDENDUM

# TO

# APPENDIX 3.2G

RECLAMATION AS-BUILT HYDROLOGY CALCULATIONS

SUBSTATION AREA CHANNELS AND CERTIFICATION

007/004

EARTHFAX ENGINEERING, INC.
ENGINEERS / SCIENTISTS

PROJECT _____ PAGE _____ OF _____
COMPUTED _____ DATE _____
CHECKED _____ DATE _____

Sowbelly Canyon Substation Area As-built
Reclamation Channels and Certification

REGISTERED PROFESSIONAL ENGINEER
6-23-09
No. 189797
LAYNE D.
JENSEN
STATE OF UTAH

# Sowbelly Canyon Substation Area As-built Reclamation Channels and Certification

Calculations below represent the minimum measurements of the as-built channel. Therefore the rest of the channel has a greater capacity than the cross-section modeled. Design values and Peak flows obtained from Appendix 3.2E

## SBRD-3

$Q_{10-6}$ = 2.04 cfs (From previous calculations)

| | as-built | Design | |
|---|---|---|---|
| Bottom Width | 3.75' | 4' | See pages 4 + 5 for Calculation Sheets and Figures 1 + 2 |
| Side Slopes | 1.8 : 1 | 3:1 | |
| Depth | 1.2' | 1.2' | |
| Riprap $D_{50}$ | 6" | 3" | |
| min slope | 4% | 4% | |
| max slope | 25% | 53% | |
| max Flow Depth | 0.19' | 0.2' | |
| max velocity | 3.81 fps | 6.14 fps | |

Although the minimum cross-section is smaller than the design the channel still easily handles the design event with 1' of freeboard. Although the as-built channel is smaller which would suggest a greater flow depth the depth is about the same because I used an equation for Mannings n which takes into account the slope. Previous calculations did not account for how n changes with slope. See pg 16 for explanation of the channel extension beyond the App. design

## SBRD-5

$Q_{10-6}$ = 1.04 cfs (from previous Calculations)

| | as-built | Design | |
|---|---|---|---|
| Bottom Width | 4.0' | 3.0' | See pages 6 + 7 for Calculation sheets and Figures 1 + 2 |
| Side Slopes | 1.7 : 1 | 2:1 | |
| Depth | 0.75" | 1.0' | |
| Riprap $D_{50}$ | 6" | 2.5" | |
| min slope | 16.7% | 8% | |
| max slope | 40% | 20% | |
| max flow Depth | 0.09' | 0.14' | |
| max flow velocity | 3.2 fps | 3.67 fps | |

This channel can easily handle the design event. See pg 16 for an explanation of why this channel was extended beyond that shown on the approved reclamation plan.

## SBRD-6

$Q_{10-6}$ = 0.37 cfs

| | as-built | Design |
|---|---|---|
| Bottom Width | 0 | 0 |
| Side Slope R | 15:1 + 50:1 * | 3:1 |
| Side Slope L | 2:1 | 3:1 |
| Depth | 12" | 1.2' |
| Riprap | roadbase | 1" |
| min slope | 4.4% | 5% |
| max slope | 8% | 5% |
| Max. flow depth | 0.15' | 0.2' |
| max. velocity | 2.32 fps. | 2.76 fps |

See pages 8+9 for calculation sheets and Figures 3+4

* see figure

Channel easily handles the design event.

## SBRD-7A

The culvert (SBRC-1) was placed farther down-stream than the design called for. Thus SBRD-7 is longer than planned and has a larger watershed area contributing to the channel. An additional watershed has been added (SBRWS-UPL) as seen on page 10

CN = 75
Area = 192,500 ft² = 4.42 Acres
Averge slope = 57%
Hydraulic length = 700'
Time of Concentration = 0.061 hrs

$Q_{10-6}$ = 0.34 cfs. (See pg 11)

Total Flow = 0.37 + 1.04 + 0.34 = 1.75 cfs

SBRD- 7A (cont)

| | as-built | Design |
|---|---|---|
| Bottom Width | 2' | 0 |
| Side Slope R | 10:1 + 50:1 | 3:1 |
| Side Slope L | 2:1 | 3:1 |
| Depth | 12" | 1.4' |
| Riprap | 6" | 2" |
| min slope | 4.4 % | 10% |
| max slope | 6.7% | 10% |
| max flow depth | 0.22' | 0.4' |
| max velocity | 2.69 fps | 3.68 fps |

See pages 12 + 13 for Calculation sheets and Figures 3 + 4

This section can easily handle the design event.

SBRD - 7B

$Q_{10-6} = 1.75$ cfs

| | as-built | Design |
|---|---|---|
| Bottom Width | 3' | 0 |
| Side slope R | 13:1 | 3:1 |
| Side slope L | 2.7:1 | 3:1 |
| Depth | 9" | 1.4' |
| Riprap | Rocky vegetated soil | 2" |
| min slope | 4% | 10% |
| max slope | 7% | 10% |
| max flow depth | 0.18' | 0.4' |
| max velocity. | 2.71 fps | 3.68 fps |

See pages 14 + 15 for calculation sheets and Figures 3 + 4

# SBRD-3 MIN SLOPE
## Worksheet for Trapezoidal Channel

| Project Description | |
|---|---|
| Worksheet | Sowbelly Canyon As-Built |
| Flow Element | Trapezoidal Channel |
| Method | Manning's Formula |
| Solve For | Channel Depth |

| Input Data | | |
|---|---|---|
| Mannings Coefficient | 0.036 | |
| Slope | 0.040000 | ft/ft |
| Left Side Slope | 1.80 | H : V |
| Right Side Slope | 1.80 | H : V |
| Bottom Width | 3.75 | ft |
| Discharge | 2.04 | cfs |

$n = 0.0456(\text{slope} \times D_{50})^{0.159} = 0.0763$

0.04 6

(Abt, et al. 1987)

| Results | | |
|---|---|---|
| Depth | 0.19 | ft < 1.2 ft |
| Flow Area | 0.8 | ft² |
| Wetted Perimeter | 4.55 | ft |
| Top Width | 4.45 | ft |
| Critical Depth | 0.20 | ft |
| Critical Slope | 0.034686 | ft/ft |
| Velocity | 2.56 | ft/s |
| Velocity Head | 0.10 | ft |
| Specific Energy | 0.30 | ft |
| Froude Number | 1.07 | |
| Flow Type | Supercritical | |

1.0' freeboard

# SBRD-3 MAX SLOPE
## Worksheet for Trapezoidal Channel

| Project Description | |
|---|---|
| Worksheet | Sowbelly Canyon As-Built |
| Flow Element | Trapezoidal Channel |
| Method | Manning's Formula |
| Solve For | Channel Depth |

| Input Data | | |
|---|---|---|
| Mannings Coefficient | 0.049 | $n = 0.0456(0.25 \times 6)^{0.159} = 0.49$ |
| Slope | 0.250000 ft/ft | |
| Left Side Slope | 1.80 H : V | |
| Right Side Slope | 1.80 H : V | |
| Bottom Width | 3.75 ft | |
| Discharge | 2.04 cfs | |

| Results | | |
|---|---|---|
| Depth | 0.13 ft | |
| Flow Area | 0.5 ft² | |
| Wetted Perimeter | 4.30 ft | |
| Top Width | 4.23 ft | |
| Critical Depth | 0.20 ft | |
| Critical Slope | 0.062175 ft/ft | |
| Velocity | 3.81 ft/s | < 5.0 fps non erosive |
| Velocity Head | 0.23 ft | |
| Specific Energy | 0.36 ft | |
| Froude Number | 1.89 | |
| Flow Type | Supercritical | |

# SBRD-5 MIN SLOPE
## Worksheet for Trapezoidal Channel

| Project Description | |
|---|---|
| Worksheet | Sowbelly Canyon As-Built |
| Flow Element | Trapezoidal Channel |
| Method | Manning's Formula |
| Solve For | Channel Depth |

| Input Data | | |
|---|---|---|
| Mannings Coefficient | 0.046 | $n = 0.0456(0.167 \times 6)^{0.159} = 0.046$ |
| Slope | 0.167000 ft/ft | |
| Left Side Slope | 1.70 H : V | |
| Right Side Slope | 1.70 H : V | |
| Bottom Width | 4.00 ft | |
| Discharge | 1.04 cfs | |

| Results | | |
|---|---|---|
| Depth | 0.09 ft | < 0.75 freeboard = 0.66' |
| Flow Area | 0.4 ft² | |
| Wetted Perimeter | 4.37 ft | |
| Top Width | 4.32 ft | |
| Critical Depth | 0.13 ft | |
| Critical Slope | 0.062753 ft/ft | |
| Velocity | 2.66 ft/s | |
| Velocity Head | 0.11 ft | |
| Specific Energy | 0.20 ft | |
| Froude Number | 1.56 | |
| Flow Type | Supercritical | |

# SBRD-5 MAX SLOPE
## Worksheet for Trapezoidal Channel

| Project Description | |
|---|---|
| Worksheet | Sowbelly Canyon As-Built |
| Flow Element | Trapezoidal Channel |
| Method | Manning's Formula |
| Solve For | Channel Depth |

| Input Data | | |
|---|---|---|
| Mannings Coefficient | 0.052 | $n = 0.0456(0.4 \times 6)^{0.159} = 0.052$ |
| Slope | 0.400000 ft/ft | |
| Left Side Slope | 1.70 H : V | |
| Right Side Slope | 1.70 H : V | |
| Bottom Width | 4.00 ft | |
| Discharge | 1.04 cfs | |

| Results | | |
|---|---|---|
| Depth | 0.08 ft | |
| Flow Area | 0.3 ft² | |
| Wetted Perimeter | 4.31 ft | |
| Top Width | 4.27 ft | |
| Critical Depth | 0.13 ft | |
| Critical Slope | 0.082862 ft/ft | |
| Velocity | 3.20 ft/s | < 5 fps ∴ not erosive. |
| Velocity Head | 0.16 ft | |
| Specific Energy | 0.24 ft | |
| Froude Number | 2.04 | |
| Flow Type | Supercritical | |

# SBRD-6 MINIMUM SLOPE
## Worksheet for Triangular Channel

| Project Description | |
|---|---|
| Worksheet | Sowbelly |
| Flow Element | Triangular Channel |
| Method | Manning's Formula |
| Solve For | Channel Depth |

| Input Data | |
|---|---|
| Mannings Coefficient | 0.030 |
| Slope | 0.044000 ft/ft |
| Left Side Slope | 2.00 H : V |
| Right Side Slope | 15.00 H : V |
| Discharge | 0.37 cfs |

| Results | |
|---|---|
| Depth | 0.15 ft < 1.0' ∴ ok |
| Flow Area | 0.2 ft² |
| Wetted Perimeter | 2.65 ft |
| Top Width | 2.60 ft |
| Critical Depth | 0.16 ft |
| Critical Slope | 0.030841 ft/ft |
| Velocity | 1.85 ft/s |
| Velocity Head | 0.05 ft |
| Specific Energy | 0.21 ft |
| Froude Number | 1.18 |
| Flow Type | Supercritical |

freeboard = 0.85'


© Haestad Methods, Inc.
EarthFax Engineering Inc
37 Brookside Road Waterbury, CT 06708 USA (203) 755-1666

# SBRD-6 MAXIMUM SLOPE
## Worksheet for Triangular Channel

| Project Description | |
|---|---|
| Worksheet | Sowbelly |
| Flow Element | Triangular Channel |
| Method | Manning's Formula |
| Solve For | Channel Depth |

| Input Data | | |
|---|---|---|
| Mannings Coefficient | 0.030 | road base |
| Slope | 0.080000 ft/ft | |
| Left Side Slope | 2.00 H : V | |
| Right Side Slope | 15.00 H : V | |
| Discharge | 0.37 cfs | |

| Results | | |
|---|---|---|
| Depth | 0.14 ft | |
| Flow Area | 0.2 ft² | |
| Wetted Perimeter | 2.37 ft | |
| Top Width | 2.33 ft | |
| Critical Depth | 0.16 ft | |
| Critical Slope | 0.030839 ft/ft | |
| Velocity | 2.32 ft/s | < 5 fps ∴ ok |
| Velocity Head | 0.08 ft | |
| Specific Energy | 0.22 ft | |
| Froude Number | 1.56 | |
| Flow Type | Supercritical | |

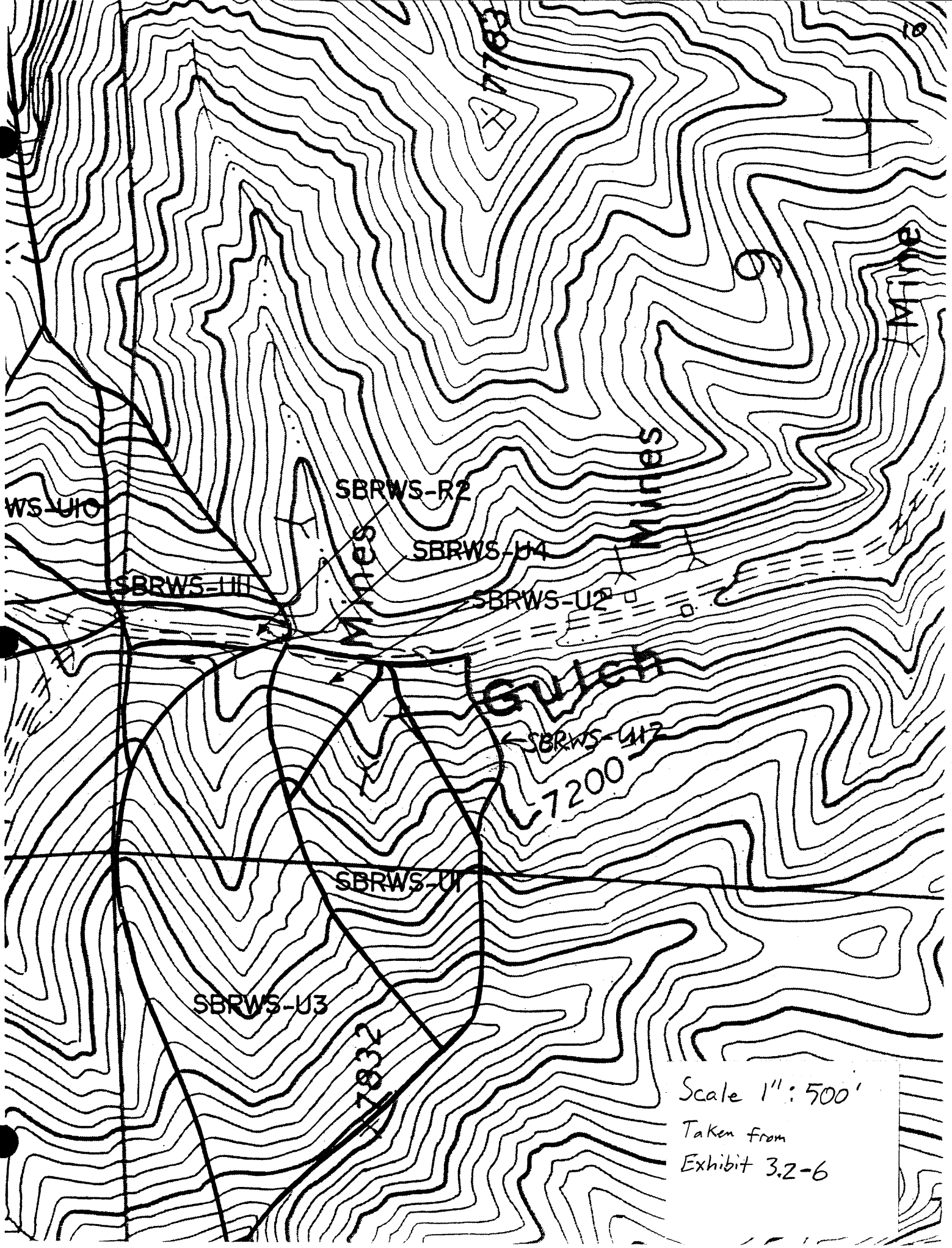


Scale 1": 500'
Taken from
Exhibit 3.2-6

Triangular Hydrograph Calculations using

SCSHYDRO Program

Watershed I.D.:
SBRWS-U12

INPUT SUMMARY

---

| STORM : | WATERSHED : |
|---|---|
| Dist.= SCS Type `b' | Area = 4.42 acres |
| Depth = 1.40 inches | CN = 75.00 |
| Duration = 6.0 hrs | Time conc.= 0.06 hrs |

---

OUTPUT SUMMARY

---

Runoff depth: 0.132 inches
Initial abstr: 0.667 inches
Peak flow: 0.34 cfs ( 0.077 iph )
at time: 2.521 hrs

---

# SBRD-7A MINIMUM SLOPE
## Worksheet for Trapezoidal Channel

| Project Description | |
|---|---|
| Worksheet | SOWBELLY |
| Flow Element | Trapezoidal Channel |
| Method | Manning's Formula |
| Solve For | Channel Depth |

| Input Data | | |
|---|---|---|
| Mannings Coefficient | 0.037 | $D_{50} = 6''$ Slope = 4.4% |
| Slope | 0.044000 ft/ft | |
| Left Side Slope | 2.00 H : V | |
| Right Side Slope | 10.00 H : V | |
| Bottom Width | 2.00 ft | |
| Discharge | 1.75 cfs | |

| Results | | |
|---|---|---|
| Depth | 0.22 ft | < 1' ∴ ok |
| Flow Area | 0.7 ft² | |
| Wetted Perimeter | 4.68 ft | freeboard = 0.78' |
| Top Width | 4.62 ft | |
| Critical Depth | 0.23 ft | |
| Critical Slope | 0.037269 ft/ft | |
| Velocity | 2.42 ft/s | |
| Velocity Head | 0.09 ft | |
| Specific Energy | 0.31 ft | |
| Froude Number | 1.08 | |
| Flow Type | Supercritical | |


© Haestad Methods, Inc.
EarthFax Engineering Inc
37 Brookside Road Waterbury, CT 06708 USA (203) 755-1666
Project Engineer: Tom Suchoski

# SBRD-7A MAXIMUM SLOPE
## Worksheet for Trapezoidal Channel

| Project Description | |
|---|---|
| Worksheet | SOWBELLY |
| Flow Element | Trapezoidal Channel |
| Method | Manning's Formula |
| Solve For | Channel Depth |

| Input Data | | |
|---|---|---|
| Mannings Coefficient | 0.040 | $D_{50}$ = 6" Slope = 6.7% |
| Slope | 0.067000 ft/ft | |
| Left Side Slope | 2.00 H : V | |
| Right Side Slope | 10.00 H : V | |
| Bottom Width | 2.00 ft | |
| Discharge | 1.75 cfs | |

| Results | |
|---|---|
| Depth | 0.20 ft |
| Flow Area | 0.7 ft² |
| Wetted Perimeter | 4.49 ft |
| Top Width | 4.43 ft |
| Critical Depth | 0.23 ft |
| Critical Slope | 0.042475 ft/ft |
| Velocity | 2.69 ft/s < 5 fps ∴ ok |
| Velocity Head | 0.11 ft |
| Specific Energy | 0.31 ft |
| Froude Number | 1.24 |
| Flow Type | Supercritical |


© Haestad Methods, Inc.
EarthFax Engineering Inc
37 Brookside Road Waterbury, CT 06708 USA (203) 755-1666

# SBRD-7B MINIMUM SLOPE
## Worksheet for Trapezoidal Channel

| Project Description | |
|---|---|
| Worksheet | Sowbelly |
| Flow Element | Trapezoidal Channel |
| Method | Manning's Formula |
| Solve For | Channel Depth |

| Input Data | | |
|---|---|---|
| Mannings Coefficient | 0.035 | rocky soil with vegetation |
| Slope | 0.040000 ft/ft | |
| Left Side Slope | 2.70 H : V | |
| Right Side Slope | 13.00 H : V | |
| Bottom Width | 3.00 ft | |
| Discharge | 1.75 cfs | |

| Results | | |
|---|---|---|
| Depth | 0.18 ft | < 0.75' ok |
| Flow Area | 0.8 ft² | |
| Wetted Perimeter | 5.84 ft | Freeboard = 0.57' |
| Top Width | 5.80 ft | |
| Critical Depth | 0.19 ft | |
| Critical Slope | 0.034716 ft/ft | |
| Velocity | 2.23 ft/s | |
| Velocity Head | 0.08 ft | |
| Specific Energy | 0.26 ft | |
| Froude Number | 1.07 | |
| Flow Type | Supercritical | |

# SBRD-7B MAXIMUM SLOPE
## Worksheet for Trapezoidal Channel

| Project Description | |
|---|---|
| Worksheet | Sowbelly |
| Flow Element | Trapezoidal Channel |
| Method | Manning's Formula |
| Solve For | Channel Depth |

| Input Data | |
|---|---|
| Mannings Coefficient | 0.035 Rocky soil w/ vegetation |
| Slope | 0.070000 ft/ft |
| Left Side Slope | 2.70 H : V |
| Right Side Slope | 13.00 H : V |
| Bottom Width | 3.00 ft |
| Discharge | 1.75 cfs |

| Results | |
|---|---|
| Depth | 0.15 ft |
| Flow Area | 0.6 ft² |
| Wetted Perimeter | 5.44 ft |
| Top Width | 5.41 ft |
| Critical Depth | 0.19 ft |
| Critical Slope | 0.034716 ft/ft |
| Velocity | 2.71 ft/s < 5 fps ∴ OK |
| Velocity Head | 0.11 ft |
| Specific Energy | 0.27 ft |
| Froude Number | 1.38 |
| Flow Type | Supercritical |

## Reclamation Culverts

### SBRC-1

Culvert Diameter = 36"

$Q_{10-6}$ = 1.75 cfs

Inlet type = projecting.

Very low slope as evidenced by sediment buildup.
Assume slope = 1%

HW / D = 48"/36" = 1.33

Inlet capacity = 45 cfs >> 1.75 cfs

Pipe Capacity = 38.9 cfs >> 1.75 cfs. See page 17

Outlet velocity = 2.64 fps. See page 17

The culvert slope, not the type of inlet, controls the capacity of the culvert. However, even with sediment buildup the culvert has plenty of capacity to handle the design event.

Outlet velocity below 5 fps. therefore, no outlet protection is required. No evidence of erosion at the outlet was observed

## Uninstalled Reclamation Culverts

Two culverts (SBRC-2 and 3) included in the approved reclamation plan were not installed. SBRD-5 was extended to remove the need for SBRC-2. The approved reclamation plan used a culvert to drop runoff down a steep Pre-SMCRA slope. PMC elected to reclaim the Pre-SMCRA slope (although not required) and extend SBRD-5 to create a more stable configuration and make the reclamation more visually pleasing.

Reclamation channel SBRD-3 was extended to eliminate the need for SBRC-3. Culverts have a greater potential for problems and require maintenance periodically. To minimize potential problems SBRC-3 was removed and replaced with an open channel.

# SBRC-1
## Worksheet for Circular Channel

| Project Description | |
|---|---|
| Worksheet | SOWBELLY |
| Flow Element | Circular Channel |
| Method | Manning's Formula |
| Solve For | Channel Depth |

| Input Data | | |
|---|---|---|
| Mannings Coefficient | 0.024 | |
| Slope | 0.010000 | ft/ft |
| Diameter | 36 | in |
| Discharge | 1.75 | cfs |

| Results | | | |
|---|---|---|---|
| Depth | 0.45 | ft | |
| Flow Area | 0.7 | ft² | |
| Wetted Perimeter | 2.38 | ft | |
| Top Width | 2.14 | ft | |
| Critical Depth | 0.41 | ft | |
| Percent Full | 15.0 | % | |
| Critical Slope | 0.014569 | ft/ft | |
| Velocity | 2.64 | ft/s | < 5 fps no outlet protection required |
| Velocity Head | 0.11 | ft | |
| Specific Energy | 0.56 | ft | |
| Froude Number | 0.84 | | |
| Maximum Discharge | 38.86 | cfs | < 45 cfs ∴ not inlet controled |
| Discharge Full | 36.13 | cfs | |
| Slope Full | 0.000023 | ft/ft | |
| Flow Type | Subcritical | | |

# CHART 5

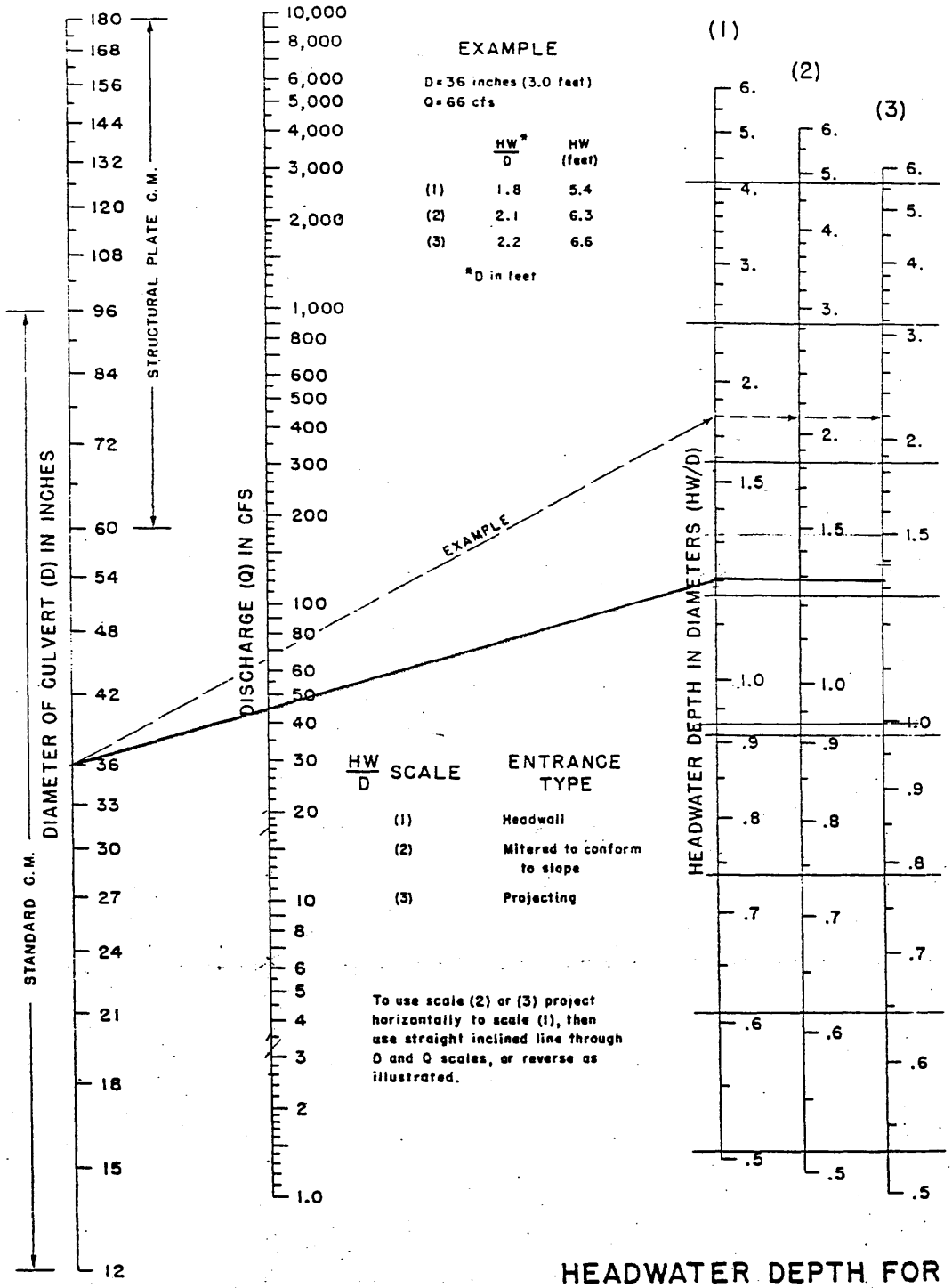


## HEADWATER DEPTH FOR C. M. PIPE CULVERTS WITH INLET CONTROL

BUREAU OF PUBLIC ROADS JAN. 1963



Ref (U.S. Dept. of Transportation, 1977)

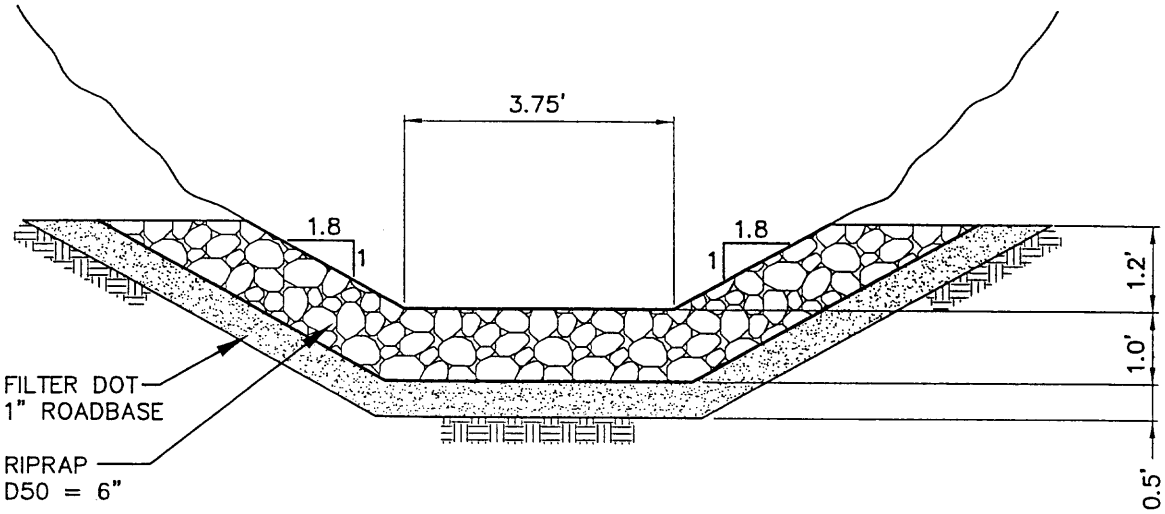


DESIGN FLOW DEPTH = 0.2'
AS-BUILT FLOW DEPTH = 0.19'
DESIGN MAX. VELOCITY = 6.14 fps.
AS-BUILT MAX. VELOCITY = 3.81 fps.

SBRD-3
NO SCALE

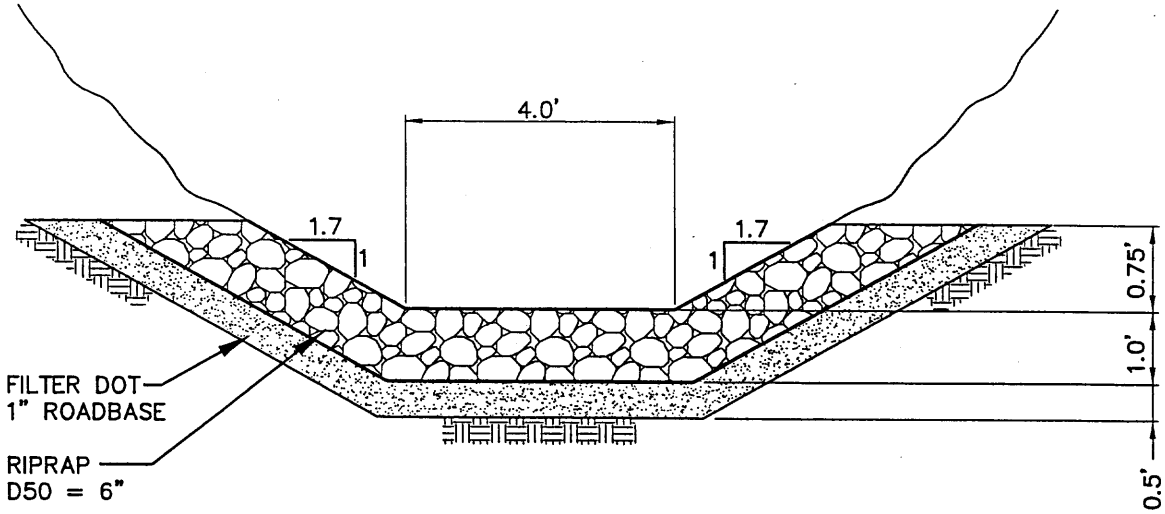


DESIGN FLOW DEPTH = 0.14'
AS-BUILT FLOW DEPTH = 0.09'
DESIGN MAX. VELOCITY = 3.67 fps.
AS-BUILT MAX. VELOCITY = 3.20 fps.

SBRD-5
NO SCALE

FIGURE 1. SOWBELLY CANYON SUBSTATION AREA CHANNEL CROSS-SECTIONS

EarthFax

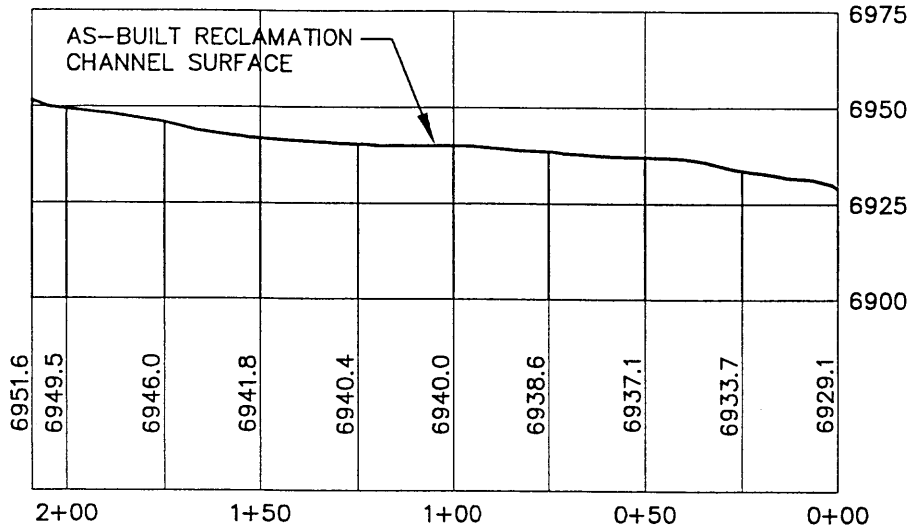


MAX. SLOPE = 25.0%

MIN. SLOPE = 4.0%

AVE. SLOPE = 10.8%

SBRD-3

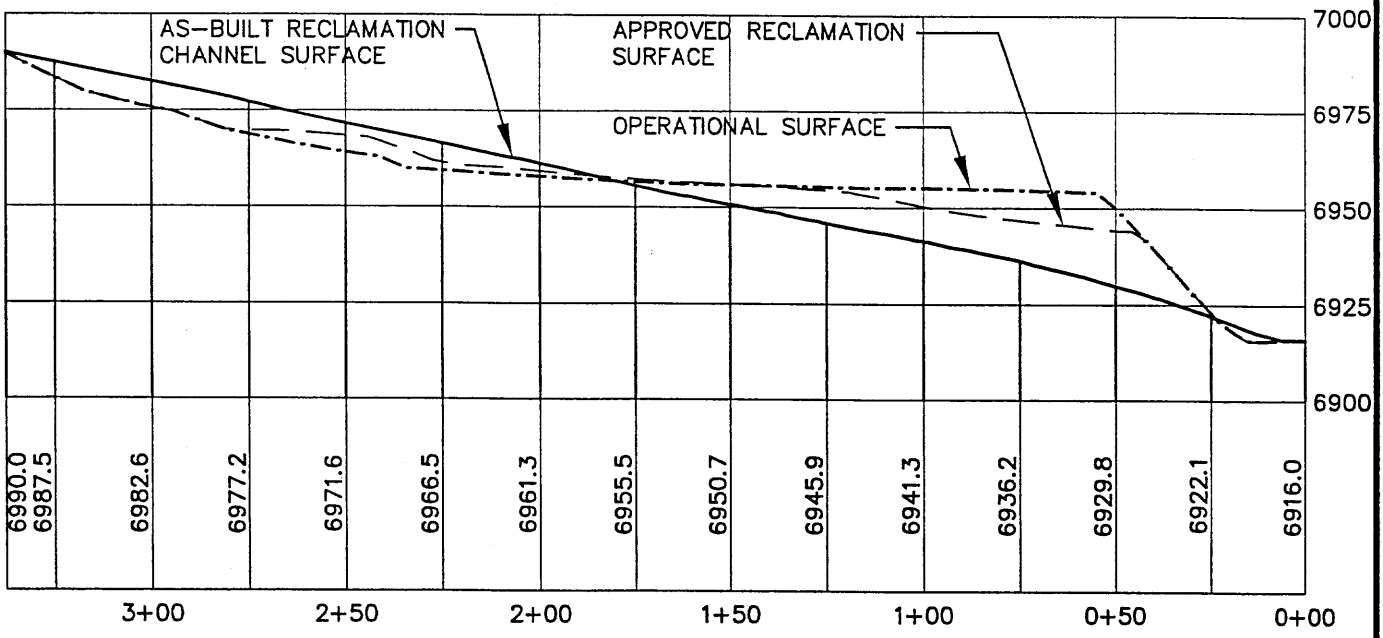


MAX. SLOPE = 40.0%

MIN. SLOPE = 16.7%

AVE. SLOPE = 22.0%

SBRD-5

0' 50'

HORZ. AND VERT.

FIGURE 2. SOWBELLY SUBSTATION AREA CHANNEL PROFILES

EarthFax

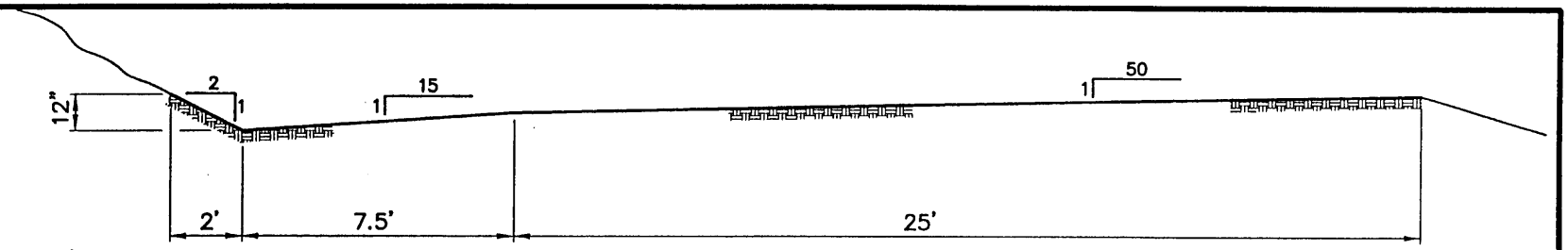


DESIGN FLOW DEPTH = 0.20'
AS-BUILT FLOW DEPTH = 0.15'
DESIGN MAX. VELOCITY = 2.76 fps
AS-BUILT MAX. VELOCITY = 2.32 fps

SBRD-6
NO SCALE

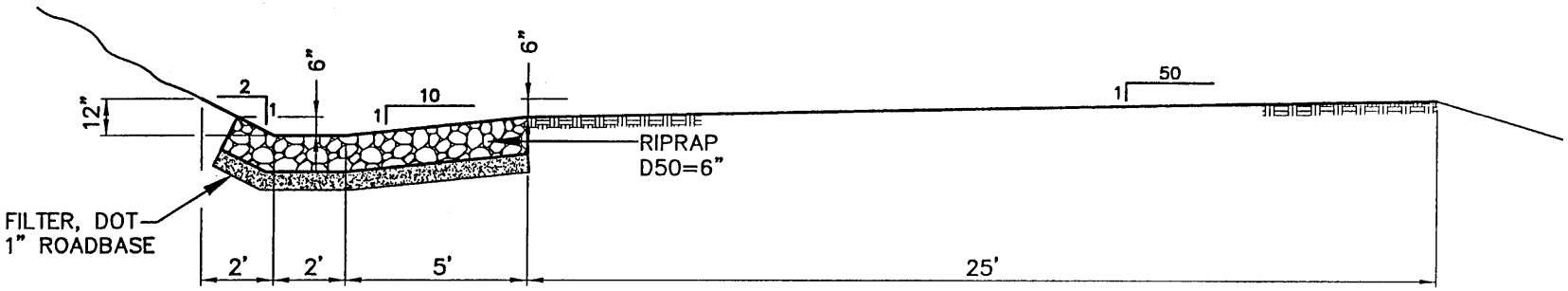


DESIGN FLOW DEPTH = 0.40'
AS-BUILT FLOW DEPTH = 0.22'
DESIGN MAX. VELOCITY = 3.68 fps
AS-BUILT MAX. VELOCITY = 2.69 fps

SBRD-7A
NO SCALE

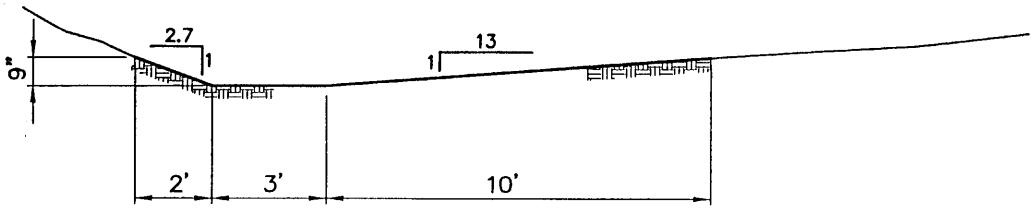


DESIGN FLOW DEPTH = 0.40'
AS-BUILT FLOW DEPTH = 0.18'
DESIGN MAX. VELOCITY = 3.68 fps
AS-BUILT MAX. VELOCITY = 2.71 fps

SBRD-7B
NO SCALE

FIGURE 3. SOWBELLY CANYON SUBSTATION AREA CHANNEL CROSS-SECTIONS

EarthFax

G:\UC798\13\DWG\FIG-3 Sowbelly.DWG 06-22-04

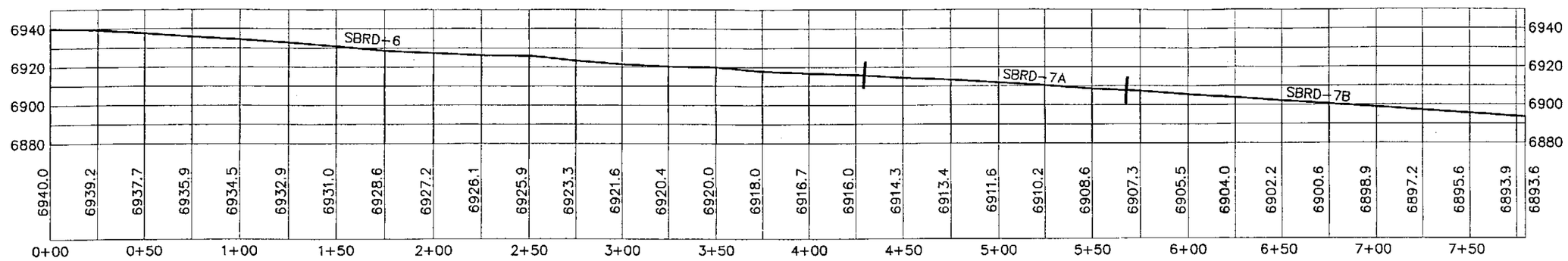


MAX. SLOPE = 8.0%

MIN. SLOPE = 4.0%

AVE. SLOPE = 6.0%

SBRD-6, SBRD-7A AND SBRD-7B

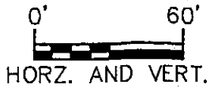


FIGURE 4. SOWBELLY SUBSTATION AREA CHANNEL PROFILES

EarthFax

# APPENDIX 3.2K

PUBLIC NOTICE AND AGENCY AND LANDOWNER LETTERS

## *AFFIDAVIT OF PUBLICATION*

STATE OF UTAH)

ss.

County of Carbon,)

I, Ken Larson, on oath, say that I am the Publisher of the Sun Advocate, a twice-weekly newspaper of general circulation, published at Price, State a true copy of which is hereto attached, was published in the full issue of such newspaper for 4 (Four) publication was on the 7th of April, 2005, and that the last publication of such notice was in the issue of such newspaper dated the 28th day of April, 2005.

Ken G. Larson

Ken G Larson - Publisher

Subscribed and sworn to before me this 28th day of April, 2005.

Linda Thayn

Notary Public My commission expires January 10, 2007 Residing at Price, Utah

Publication fee, $ 532.48

LINDA THAYN
NOTARY PUBLIC • STATE of UTAH
845 EAST MAIN
PRICE, UTAH 84501
COMM. EXPIRES 1-10-2007

# PUBLIC NOTICE

**APPLICATION FOR PHASE I BOND RELEASE**
**SOWBELLY GULCH SUBSTATION AREA**
**CASTLE GATE HOLDING COMPANY**
**CASTLE GATE MINE**
**PERMIT C/007/004, APPROVED 12/24/94**
**CARBON COUNTY, UTAH**

Castle Gate Holding Company, 999 Corporate Blvd., Linthicum Heights, MD 21090, has completed Phase I of the approved reclamation plan for the Castle Gate Mine substation area of the Castle Gate Mine. This is based on meeting the backfilling and grading and drainage control requirements for Phase I reclamation in accordance with the approved reclamation plan.

In accordance with the provisions of R645-301-880, of the State of Utah R645-Coal Mining Rules, notice is hereby given to the general public that Castle Gate Holding Company is applying for partial release of the performance bond posted for this operation.

The surety bond posted for the Castle Gate Mine is $680,154 of which $233,000 is designated for the Sowbelly Gulch reclamation. Castle Gate Holding Company is seeking release of $85,000 from the Sowbelly Gulch portion of the bond. All earthwork, drainage control, and revegetation have been completed on site.

The Sowbelly Gulch No. 5 Mine is located on the Standardville, Utah, U.S. Geological Survey 7.5 minute quadrangle map. The mine site is located in Sowbelly Gulch, approximately 4 miles west-northwest of Helper, Utah. Reclamation work was performed on approximately 1.8 acres located on the following described lands:

Township 13 South, Range 9 East, SLB&M, Utah

Section 9: NW1/4 NW1/4

The Utah Division of Oil, Gas and Mining will now evaluate the proposal to determine whether it meets all the criteria of the Permanent Program Performance Standards according to the requirements of the Utah Coal Mining Rules.

Written comments, objections and requests for public hearing or information conference on this proposal may be addressed to:

Utah Coal Program
Utah Division of Oil, Gas and Mining
1594 West North Temple, Suite 1210
P.O. Box 145801
Salt Lake City, Utah 84114-5801

Closing date for submission of such comments, objections and requests for public hearing or information conference on this proposal must be submitted by May 26, 2005.

Published in the Sun Advocate April 7, 14, 21, and 28, 2005.

**CASTLE GATE HOLDING COMPANY**
Castle Gate Mine
P.O. Box 30
847 NW HWY 191
Helper, Utah 84526
(435)472-0475
Fax: (435)472-4782

September 21, 2004

Mr. Roger Wheeler
Director Land Management
American Electric Power
700 Morrison Road
Gahanna, Ohio 43230-6642

**Re: Notification of Application for Phase I Bond Release, Substation Area, Sowbelly Gulch No. 5 Mine, Castle Gate Holding Company, Castle Gate Mine, C/007/004, Carbon County, Utah**

Dear Mr. Wheeler:

Castle Gate Holding Company has completed Phase I of the approved reclamation plan for the substation area at the Sowbelly Gulch No. 5 Mine. This is based on meeting the backfilling and grading requirements for Phase I reclamation.

In accordance with the provisions of R645-301-880 of the State of Utah R645 Coal Mining Rules, this letter will serve as notification that Castle Gate Holding Company intends to file an application with the Utah Division of Oil, Gas and Mining for partial release of the performance bond posted for this operation.

The surety bond posted for the Castle Gate Mine is $680,154 of which $233,000 is designated for the Sowbelly Gulch reclamation. Castle Gate Holding Company is seeking release of $85,000 from the Sowbelly Gulch portion of the bond. All earthwork and revegetation has been completed on site.

Comments concerning Phase I bond release from the legal or equitable owner of record of the surface areas to be affected and from the Federal, Utah and local government agencies which would have to initiate, implement, approve, or authorize the proposed use of the land following reclamation should be mailed to: Plateau Mining Corporation, Attention: Johnny Pappas, P.O. Box 30, Helper, Utah 84526.

If you have any questions or need additional information, please do not hesitate to contact me at (435) 472-4741.

Sincerely,

Johnny Pappas
Sr. Environmental Engineer

Env: Sowbelly Gulch Substation Area -Phase I Bond Release
Chrono: JP040803.LTR

**CASTLE GATE HOLDING COMPANY**
Castle Gate Mine
P.O. Box 30
847 NW HWY 191
Helper, Utah 84526
(435)472-0475
Fax: (435)472-4782

September 21, 2004

Mr. Mark Mackiewicz
Bureau of Land Management
125 South 600 West
Price, Utah 84501

**Re: Notification of Application for Phase I Bond Release, Substation Area, Sowbelly Gulch No. 5 Mine, Castle Gate Holding Company, Castle Gate Mine, C/007/004, Carbon County, Utah**

Dear Mr. Mackiewicz:

Castle Gate Holding Company has completed Phase I of the approved reclamation plan for the substation area at the Sowbelly Gulch No. 5 Mine. This is based on meeting the backfilling and grading requirements for Phase I reclamation.

In accordance with the provisions of R645-301-880 of the State of Utah R645 Coal Mining Rules, this letter will serve as notification that Castle Gate Holding Company intends to file an application with the Utah Division of Oil, Gas and Mining for partial release of the performance bond posted for this operation.

The surety bond posted for the Castle Gate Mine is $680,154 of which $233,000 is designated for the Sowbelly Gulch reclamation. Castle Gate Holding Company is seeking release of $85,000 from the Sowbelly Gulch portion of the bond. All earthwork and revegetation has been completed on site.

Comments concerning Phase I bond release from the legal or equitable owner of record of the surface areas to be affected and from the Federal, Utah and local government agencies which would have to initiate, implement, approve, or authorize the proposed use of the land following reclamation should be mailed to: Plateau Mining Corporation, Attention: Johnny Pappas, P.O. Box 30, Helper, Utah 84526.

If you have any questions or need additional information, please do not hesitate to contact me at (435) 472-4741.

Sincerely,

Johnny Pappas
Sr. Environmental Engineer

Env: Sowbelly Gulch Substation Area -Phase I Bond Release
Chrono: JP040805.LTR

**CASTLE GATE HOLDING COMPANY**
Castle Gate Mine
P.O. Box 30
847 NW HWY 191
Helper, Utah 84526
(435)472-0475
Fax: (435)472-4782

September 21, 2004

Mr. William D. Krompel
Commissioner
120 East Main Street
Price, Utah 84501

**Re: Notification of Application for Phase I Bond Release, Substation Area, Sowbelly Gulch No. 5 Mine, Castle Gate Holding Company, Castle Gate Mine, C/007/004, Carbon County, Utah**

Dear Mr. Krompel:

Castle Gate Holding Company has completed Phase I of the approved reclamation plan for the substation area at the Sowbelly Gulch No. 5 Mine. This is based on meeting the backfilling and grading requirements for Phase I reclamation.

In accordance with the provisions of R645-301-880 of the State of Utah R645 Coal Mining Rules, this letter will serve as notification that Castle Gate Holding Company intends to file an application with the Utah Division of Oil, Gas and Mining for partial release of the performance bond posted for this operation.

The surety bond posted for the Castle Gate Mine is $680,154 of which $233,000 is designated for the Sowbelly Gulch reclamation. Castle Gate Holding Company is seeking release of $85,000 from the Sowbelly Gulch portion of the bond. All earthwork and revegetation has been completed on site.

Comments concerning Phase I bond release from the legal or equitable owner of record of the surface areas to be affected and from the Federal, Utah and local government agencies which would have to initiate, implement, approve, or authorize the proposed use of the land following reclamation should be mailed to: Plateau Mining Corporation, Attention: Johnny Pappas, P.O. Box 30, Helper, Utah 84526.

If you have any questions or need additional information, please do not hesitate to contact me at (435) 472-4741.

Sincerely,

Johnny Pappas
Sr. Environmental Engineer

Env: Sowbelly Gulch Substation Area -Phase I Bond Release
Chrono: JP040806.LTR

**CASTLE GATE HOLDING COMPANY**
Castle Gate Mine
P.O. Box 30
847 NW HWY 191
Helper, Utah 84526
(435)472-0475
Fax: (435)472-4782

September 21, 2004

Mr. Dave Levanger
Carbon County Planning and Zoning
120 East Main Street
Price, Utah 84501

**Re: Notification of Application for Phase I Bond Release, Substation Area, Sowbelly Gulch No. 5 Mine, Castle Gate Holding Company, Castle Gate Mine, C/007/004, Carbon County, Utah**

Dear Mr. Levanger:

Castle Gate Holding Company has completed Phase I of the approved reclamation plan for the substation area at the Sowbelly Gulch No. 5 Mine. This is based on meeting the backfilling and grading requirements for Phase I reclamation.

In accordance with the provisions of R645-301-880 of the State of Utah R645 Coal Mining Rules, this letter will serve as notification that Castle Gate Holding Company intends to file an application with the Utah Division of Oil, Gas and Mining for partial release of the performance bond posted for this operation.

The surety bond posted for the Castle Gate Mine is $680,154 of which $233,000 is designated for the Sowbelly Gulch reclamation. Castle Gate Holding Company is seeking release of $85,000 from the Sowbelly Gulch portion of the bond. All earthwork and revegetation has been completed on site.

Comments concerning Phase I bond release from the legal or equitable owner of record of the surface areas to be affected and from the Federal, Utah and local government agencies which would have to initiate, implement, approve, or authorize the proposed use of the land following reclamation should be mailed to: Plateau Mining Corporation, Attention: Johnny Pappas, P.O. Box 30, Helper, Utah 84526.

If you have any questions or need additional information, please do not hesitate to contact me at (435) 472-4741.

Sincerely,

Johnny Pappas
Sr. Environmental Engineer

Env: Sowbelly Gulch Substation Area -Phase I Bond Release
Chrono: JP040807.LTR