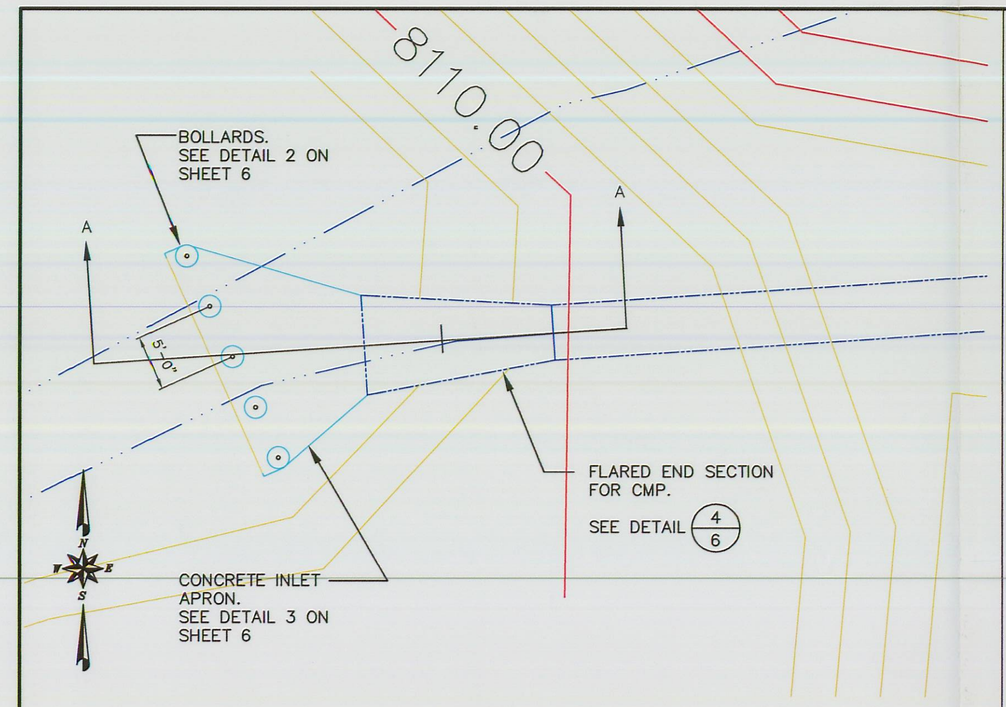

PLAN
1"=10'

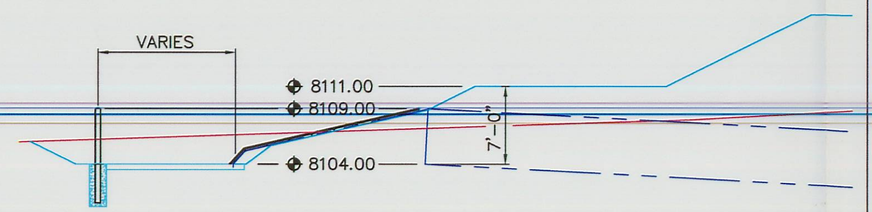

SECTION AA
1"=10'

60" CULVERT INLET (WQC-2) 1/6

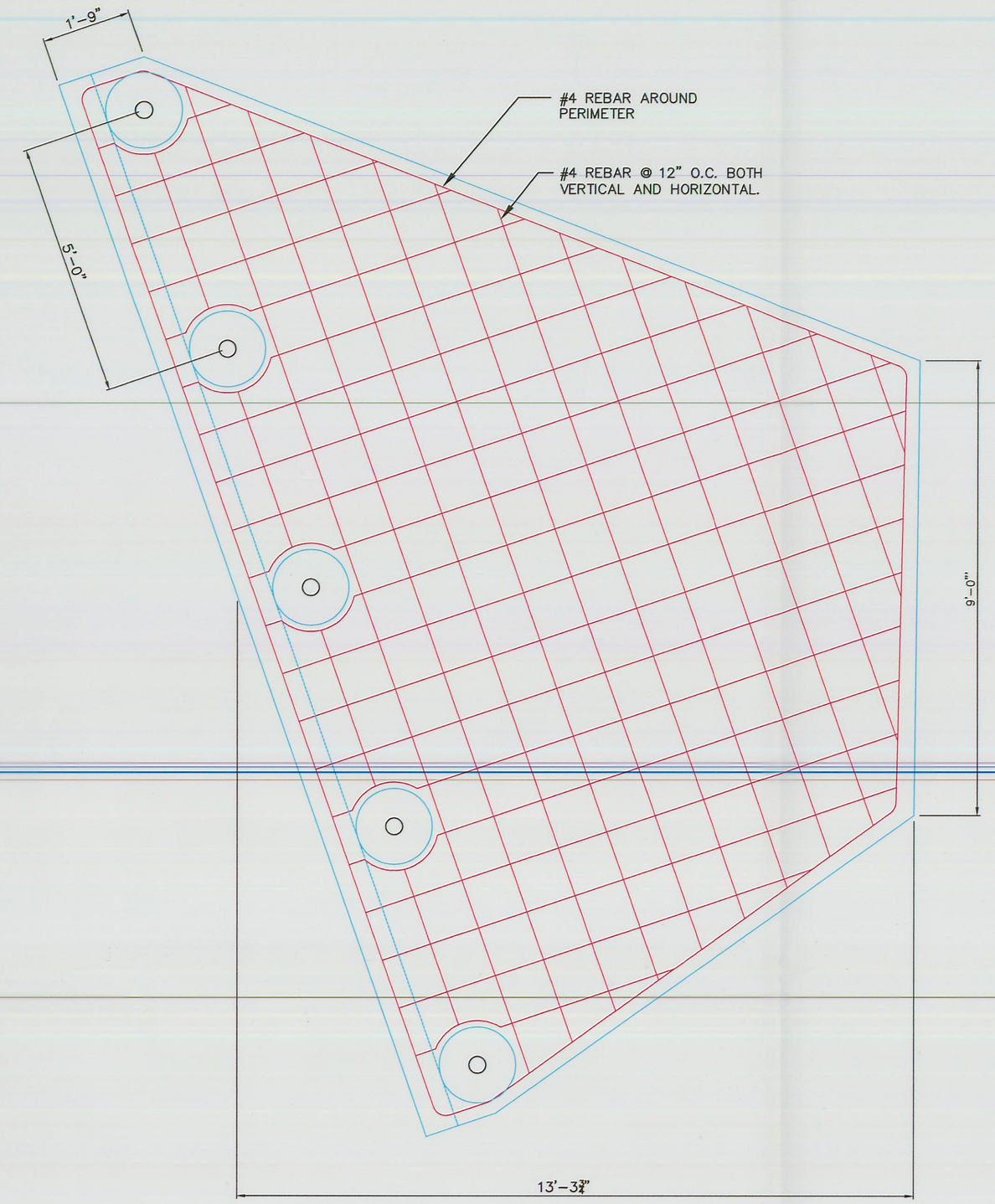

PLAN
NTS

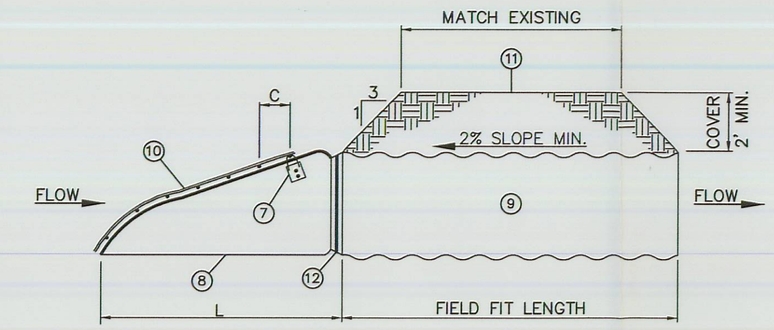

FRONT ELEVATION

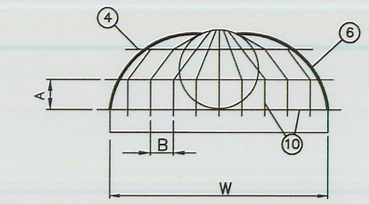

SIDE ELEVATION

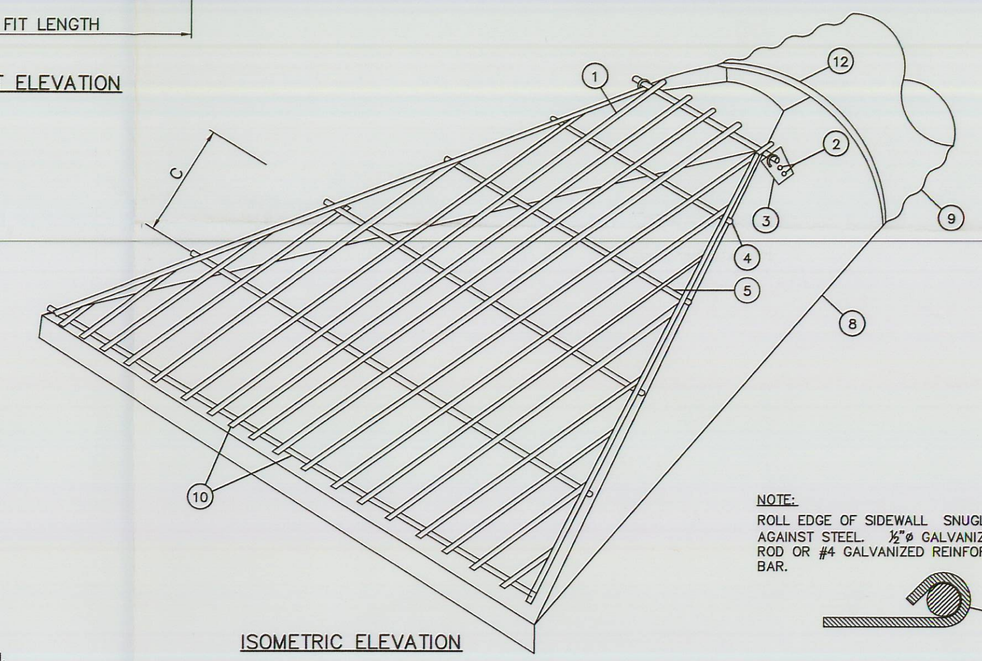

ISOMETRIC ELEVATION

MATERIALS LIST FOR CULVERT/END SECTION

1. REINFORCING STEEL BARS PER TABLE.
2. ½"ø STAINLESS STEEL BOLT/NUT. (TYP).
3. 10 GAGE STEEL STRAPS (TYP).
4. OVERLAP BARS 4" PAST EDGE OF END SECTION (TYP).
5. WELD EACH CROSS JOINT (TYP).
6. REINFORCED EDGE ON END SECTION (TYP)
7. TRASH RACK HINGE.
8. FLARED STEEL CMP END SECTION, MINIMUM WALL THICKNESS PER TABLE.[NOT USED]
9. CMP, MINIMUM WALL THICKNESS PER TABLE.
10. HINGED TRASH RACK (TYP).
11. ACCESS ROAD OR OTHER COVER.
12. ½"ø, PLACE THREADED ROD OVER TOP OF END SECTION.

NOTE:
ROLL EDGE OF SIDEWALL SNUGLY AGAINST STEEL. ½"ø GALVANIZED STEEL ROD OR #4 GALVANIZED REINFORCING BAR.

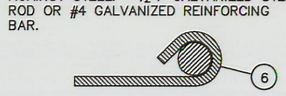

SECTION VIEW OF EDGE OF FLARED CMP ASSEMBLY

NOTES:

1. PROVIDE HINGED SAFETY BARS (TRASH RACK) ON INFLOW SIDE OF CULVERT.
2. PROVIDE FLARED END SECTIONS ON BOTH ENDS OV CULVERT.
3. INSTALL CULVERT ASSEMBLY INTO EXISTING FLOW CHANNEL. REPAIR CHANNEL AS REQUIRED TO INSTALL CULVERT ASSEMBLY AS DIRECTED BY OWNER OR ENGINEER.
4. ALL SAFETY BARS (TRASH RACK) AND COMPONENTS SHALL HAVE A CORROSION PROTECTIVE FINISH.

METAL END SECTIONS FOR CIRCULAR PIPE

PIPE DIA. (INCH)	MIN.THICK		DIMENSION (INCHES)				L DIMENSIONS				
	INCH	GAGE	A	B	C	OVERALL WIDTH	SLOPE	LENGTH (INCH)	SLOPE	LENGTH (INCH)	REBAR SIZE
18	.064	16	8	6	8	40	4:1	32	6:1	48	4
21	.064	16	8	6	8	43	4:1	44	6:1	66	4
24	.064	16	12	6	8	46	4:1	56	6:1	84	6
30	.109	12	12	9	12	60	4:1	80	6:1	120	8
36	.109	12	16	9	12	66	4:1	104	6:1	156	8
42	.109	12	16	12	20	80	4:1	128	6:1	192	10
48	.109	12	16	12	20	86	4:1	152	6:1	228	10
54	.109	12	24	16	24	92	4:1	176	6:1	264	12
60	.109	12	24	16	24	98	4:1	200	6:1	300	12

TRASH RACK FOR CORRUGATED METAL PIPING 4/6
NTS

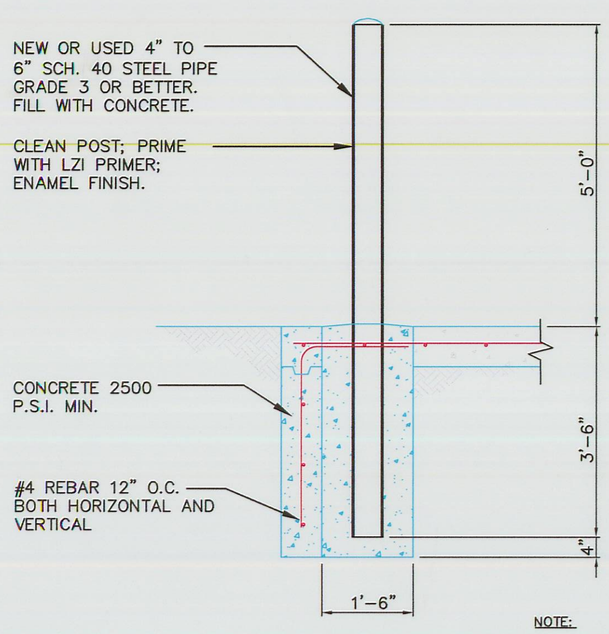

NOTE:
1. PROVIDE 8" CUTOFF WALL FOR APRON IN FRONT OF BOLLARDS TO MINIMUM 3'-10" DEPTH.

BOLLARD DETAIL 2/6
NTS

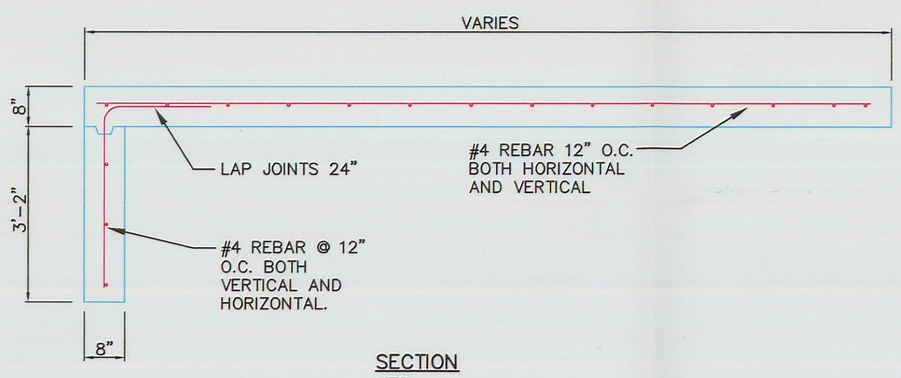

SECTION
NTS

60" CULVERT INLET APRIN (WQC-2) 3/6

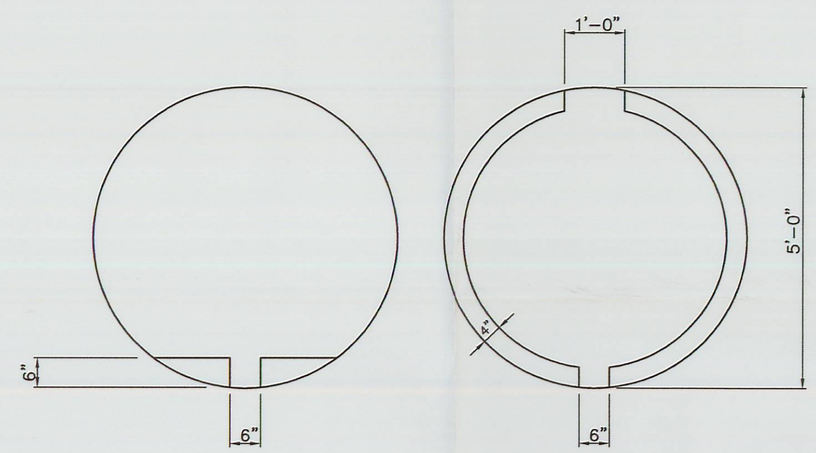

FISH BAFFLES

ROUGHNESS RINGS

NOTES:

1. ROUGHNESS RINGS AND FISH BAFFLES TO BE CUT FROM 0.25" (MIN) PLATE STEEL AND WELDED OR BOLTED TO CULVERT SIDEWALL.
2. EDGES OF ROUGHNESS RINGS AND FISH BAFFLES TO BE SMOOTHED AND CORNERS ROUNDED.
3. ALL ROUGHNESS RINGS TO BE 4" HIGH AND PLACED 4' APART. BOTTOM RING TO BE PLACED 2' IN FROM CULVERT OUTLET SEE DETAIL 2 SHEET 5 FOR LOCATIONS.
4. FISH BAFFLES TO BE PLACED AT LOCATIONS MARKED ON DETAIL 2 SHEET 5.

ROUGHNESS RINGS AND FISH BAFFLES 5/6
NTS

RECEIVED
OCT 22 2009
DIV. OF OIL, GAS & MINING

EarthFax Engineering, Inc.
Engineers/Scientists

AS SHOWN

SEAL:

REGISTERED PROFESSIONAL ENGINEER
No. 168246
RICHARD B. WHITE
NOT VALID WITHOUT A SIGNATURE
STATE OF UTAH

DATE	No.	REVISIONS

WINTER QUARTERS VENTILATION
CULVERT INLET DETAILS

Canyon Fuel Company, LLC
Skyline Mines
P.O. BOX 719 HELPER, UTAH 84526
801-637-7925

CAD FILE: EF-Q:\UC794-16\3.24-3F
DATE: 9-18-09
SCALE: AS SHOWN
CK.BY: rbw
DR.BY: st
REVISION:
DWG. NO.: 3.2.4-3f