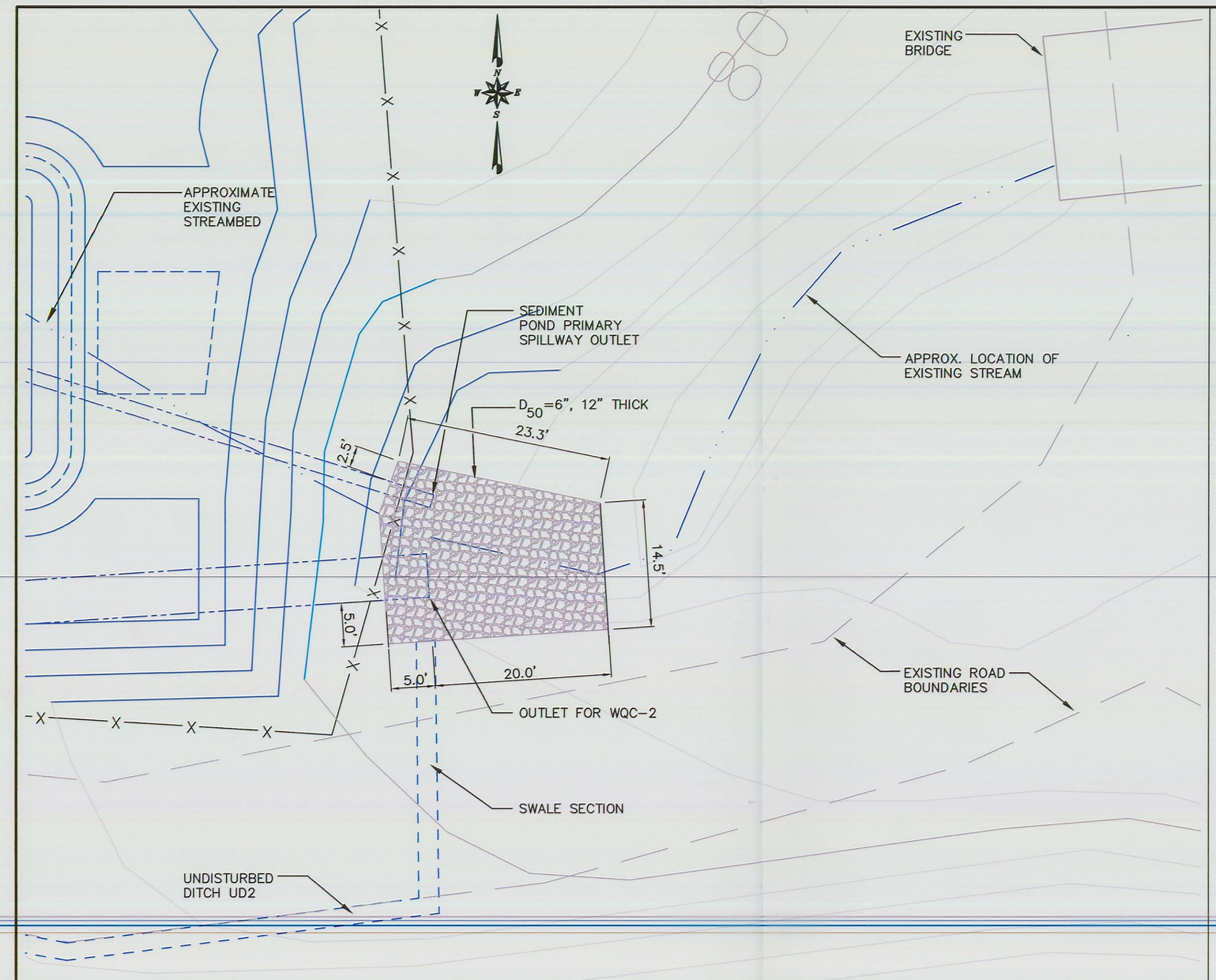

60" CULVERT OUTLET RIPRAP (WQC-2) — 1/7

PLAN VIEW

1"=10'

SEE LINES AA'-DD' IN DETAIL 2 ON SHEET 7

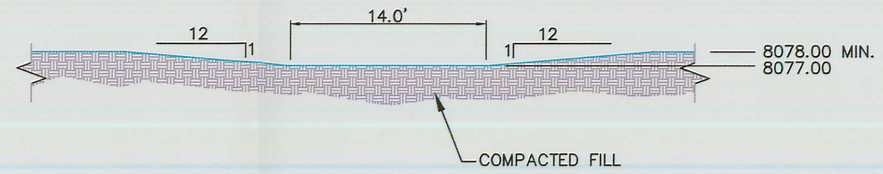

SEDIMENT POND EMERGENCY SPILLWAY AT CREST

CROSS SECTION 3

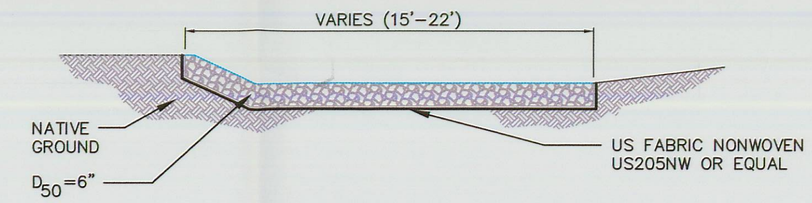

60" CULVERT OUTLET (WQC-2)

CROSS SECTION 4

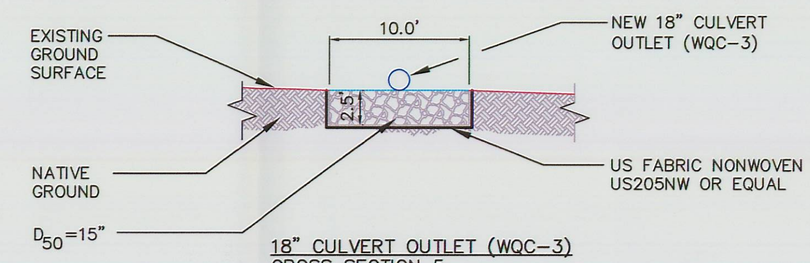

18" CULVERT OUTLET (WQC-3)

CROSS SECTION 5

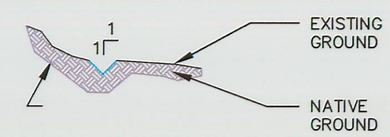

UNDISTURBED DITCH 1, 2 (UD1, UD2) AND DISTURBED DITCH 1 (DD1)

CROSS SECTION 6

RIPRAP DETAILS — 2/7

SECTION VIEW

SCALE AS SHOWN

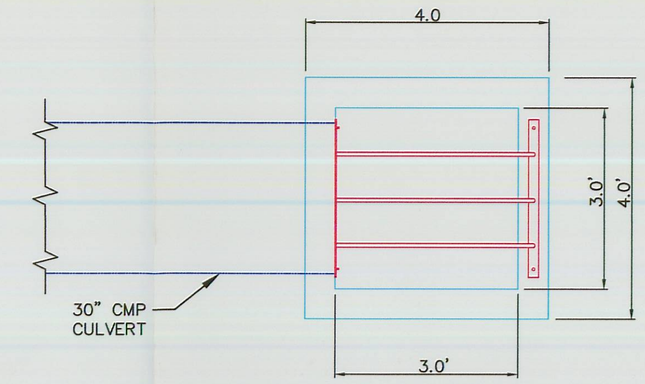

PLAN VIEW

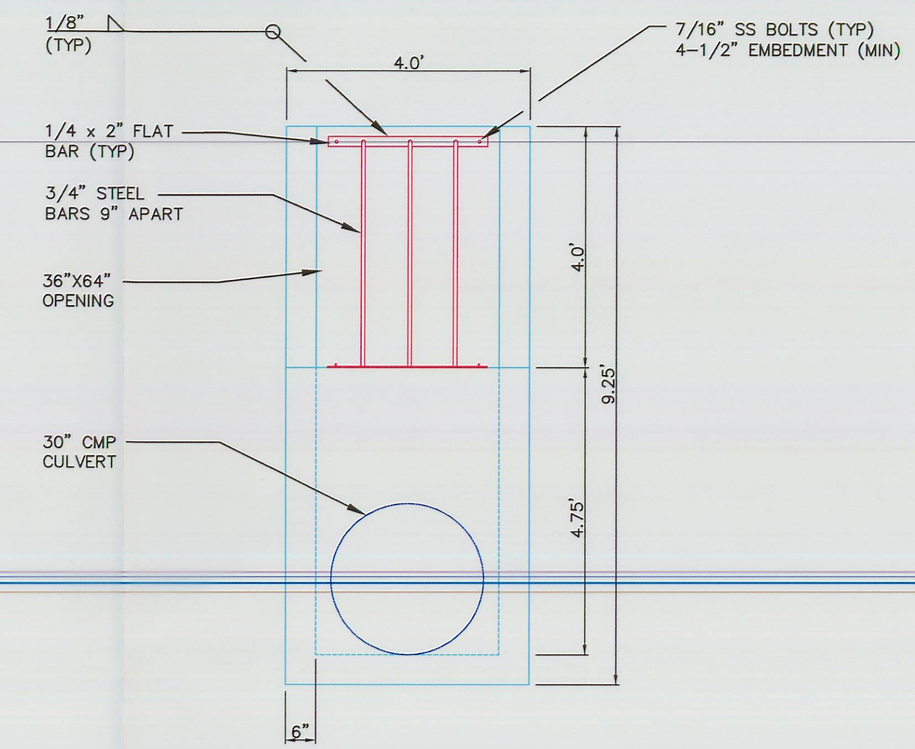

FRONT ELEVATION

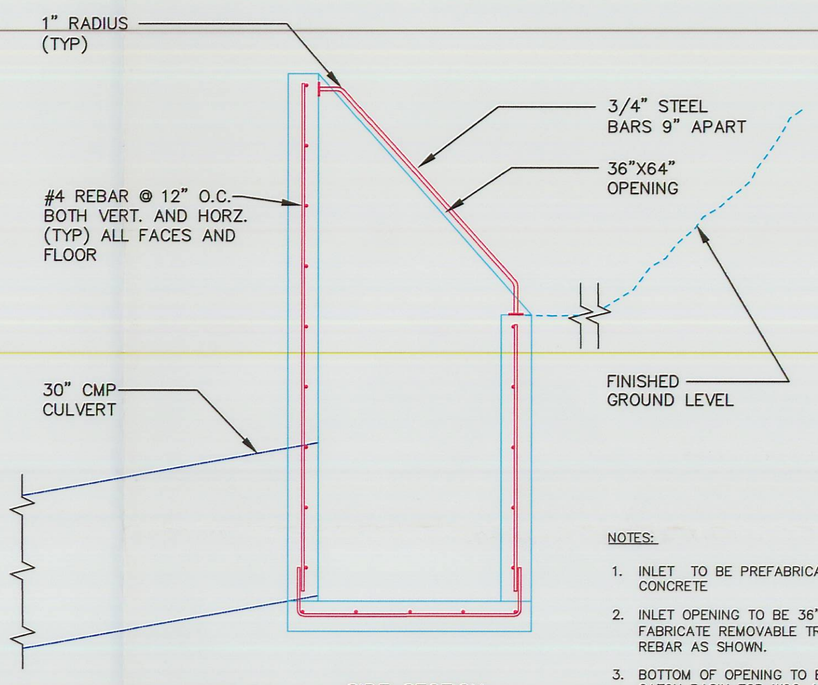

SIDE SECTION

NOTES:

1. INLET TO BE PREFABRICATED OR CAST-IN-PLACE CONCRETE
2. INLET OPENING TO BE 36" HORZ. X 42" VERT. FABRICATE REMOVABLE TRASH RACK WITH (3) #6 REBAR AS SHOWN.
3. BOTTOM OF OPENING TO BE SET AT BOTTOM OF CATCH BASIN FOR WQC-1
4. 2-1/2" COVER ON ALL REINFORCING STEEL.

INLET BOX FOR WQC-1 — 3/7

NTS

RECEIVED
OCT 22 2009
DIV. OF OIL, GAS & MINING

EarthFax Engineering, Inc.
Engineers/Scientists

AS SHOWN

SEAL:

REGISTERED PROFESSIONAL ENGINEER
No. 168246
RICHARD B. WHITE
STATE OF UTAH

DATE	No.	REVISIONS

WINTER QUARTERS VENTILATION
RIPRAP DETAILS

Canyon Fuel Company, LLC
Skyline Mines

P.O. BOX 719 HELPER, UTAH 84526
801-637-7925

CAD FILE: EF-G:\UC794-16\3.24-3G

DATE: 9-18-09 | CK.BY: rbw | REVISION:

SCALE: AS SHOWN | DR.BY: st

DWG. NO.: 3.2.4-3g