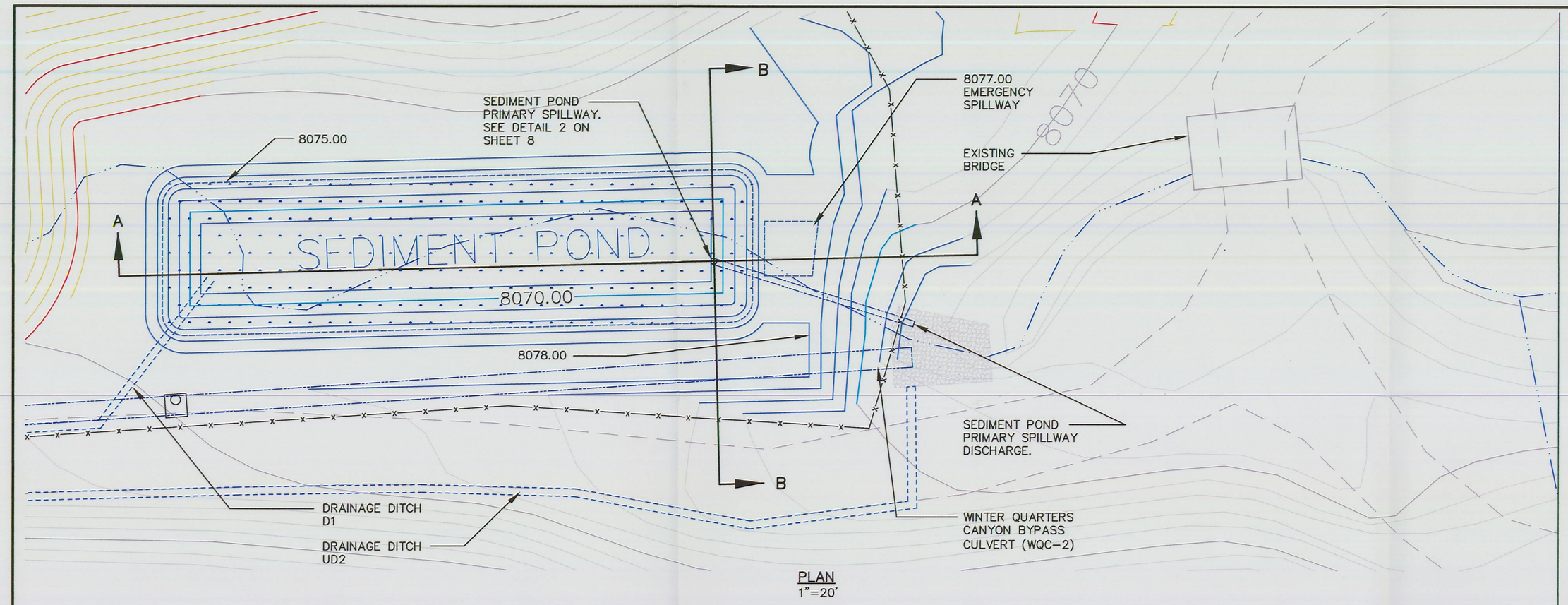

PLAN
1"=20'

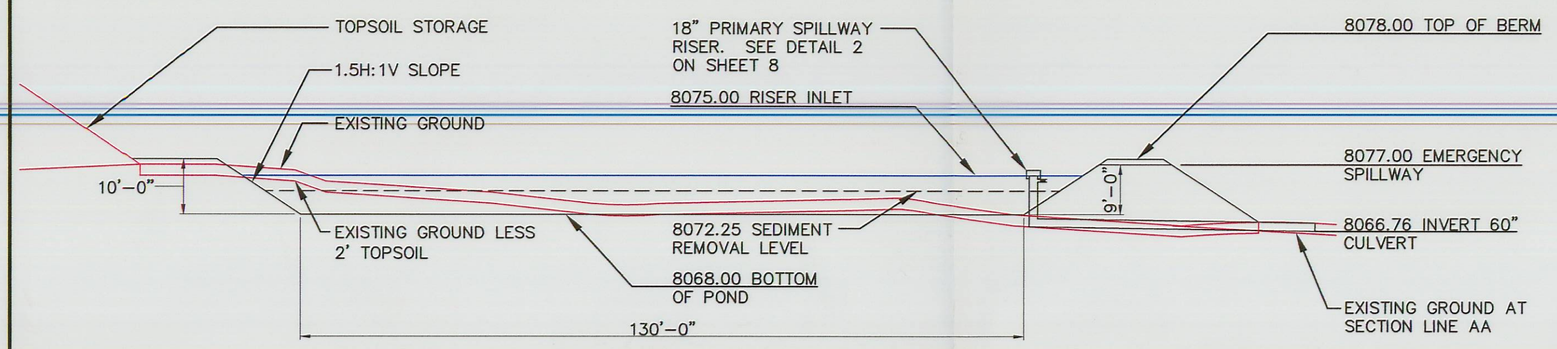

SECTION AA
HORZ: 1"=20'
VERT: 1"=20'

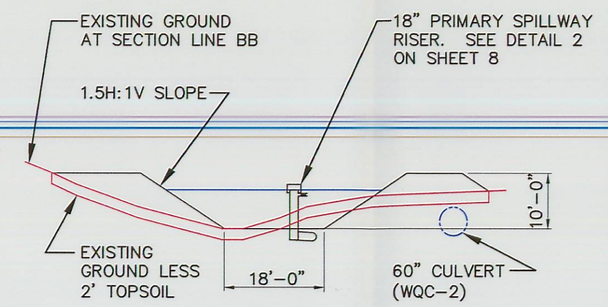

SECTION BB
HORZ: 1"=20'
VERT: 1"=20'

PROPOSED SEDIMENT POND (1/8)

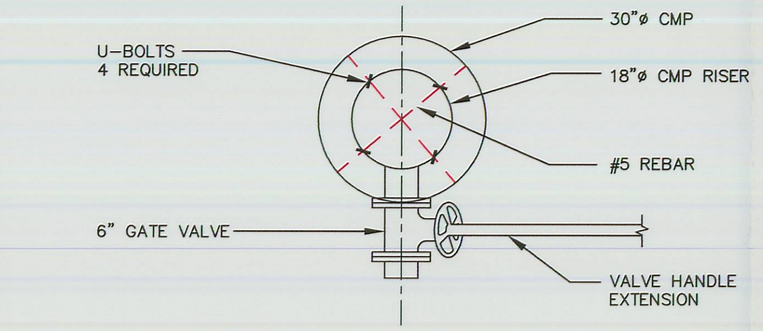

PLAN

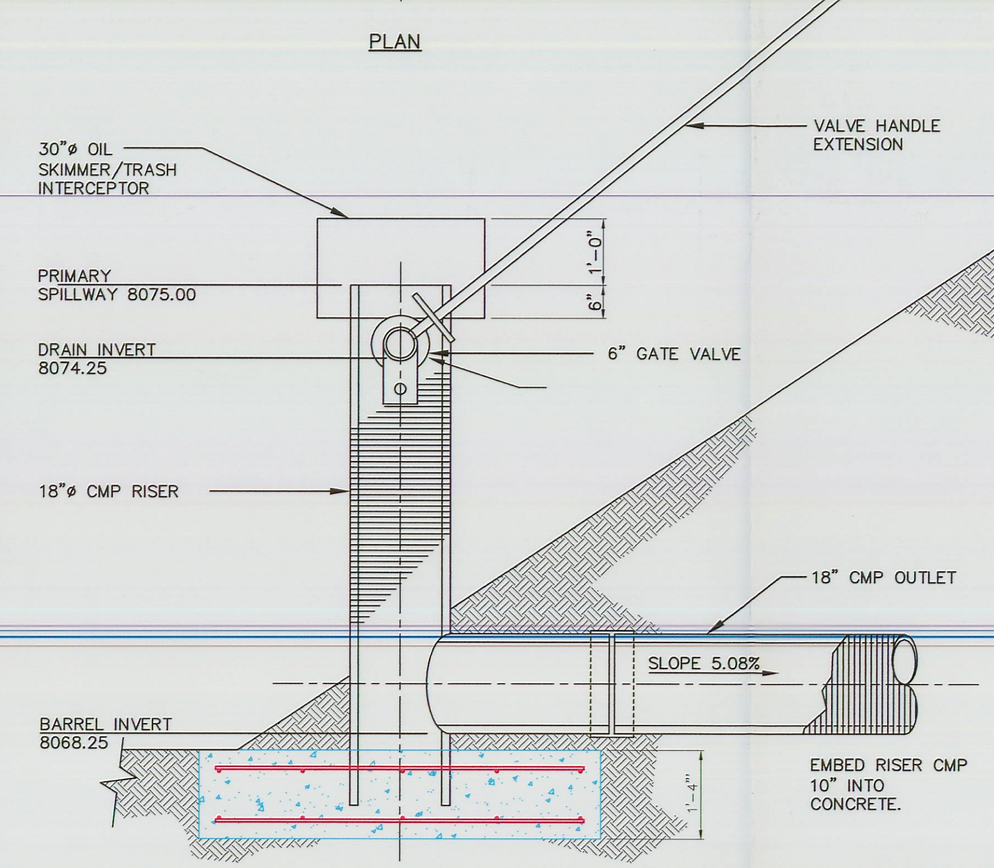

ELEVATION

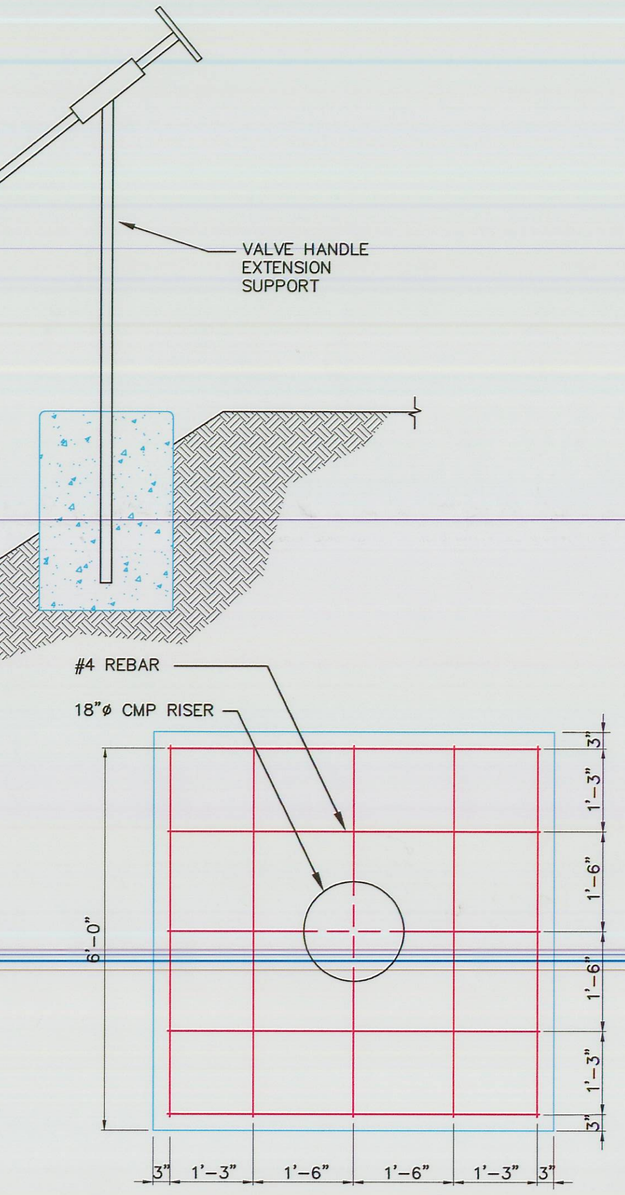

FOOTING PLAN

SEDIMENT POND PRIMARY SPILLWAY (2/8)
NO SCALE

SEDIMENT POND CALCULATION RESULTS

TOTAL AREA DRAINING TO SEDIMENT POND = 7.01 ACRES. (SEE DETAIL 4 ON SHEET 9)	ELEVATION FT	STORED VOLUME FT^3	CFS INTO POND FT^3/SEC	CFS OUT PRIMARY SPILLWAY
DISCHARGE TO SEDIMENT POND 10 YR 24HR EVENT 25 YR 6HR EVENT		627 139	0.78 0.25	
POND ELEVATION AND STORAGE BOTTOM OF POND TO PRIMARY SPILLWAY TO EMERGENCY SPILLWAY INVERT	8068.00 8075.00 8077.00	0 28,123 40,897		
RUNOFF STORAGE BETWEEN 8074.25 AND 8075.00 TOTAL SEDIMENT STORAGE (8068.00 TO 8074.25) SEDIMENT 60% REMOVAL LEVEL (8068.00 TO 8072.25)	8072.25	4,219 23,904 14,242	(HOLDS 10YR 24HR EVENT)	
POND INFLOW/OUTFLOW DISCHARGE RATES (ASSUMES FULL UP TO PRIMARY SPILLWAY OUTLET [8075.00] AT BEGINNING OF STORM)				
STORM EVENT	HIGHEST ELEVATION	PEAK STORAGE FT^3	PEAK CFS INTO POND	CFS OUT PRIMARY SPILLWAY
25 YR 6HR	8075.02.	139	0.25	0.06
100 YR 6HR	8075.11	628	0.83	0.53
100 YR 24HR	8075.30	1,763	4.56	2.56
FOR ALL EVALUATED EVENTS PEAK ELEV. IS BELOW 8077.00 EMERGENCY SPILLWAY INVERT LEVEL; POND AND PRIMARY SPILLWAY ADEQUATE FOR ALL EVALUATED EVENTS.				

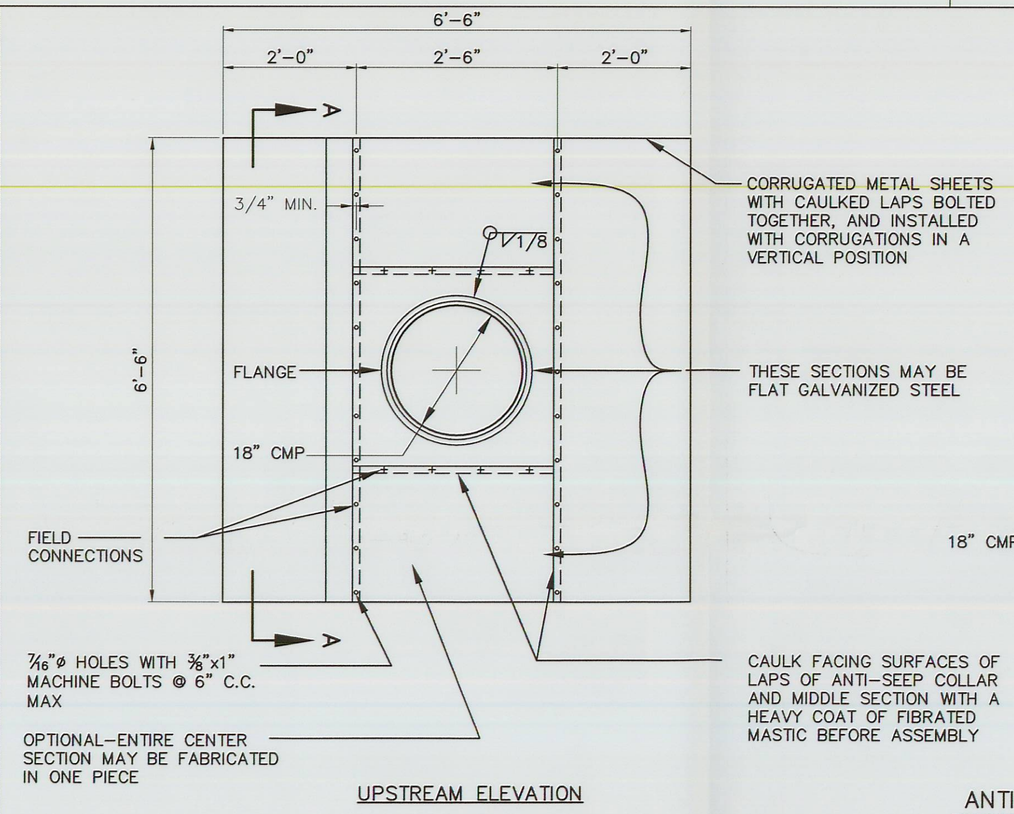

UPSTREAM ELEVATION

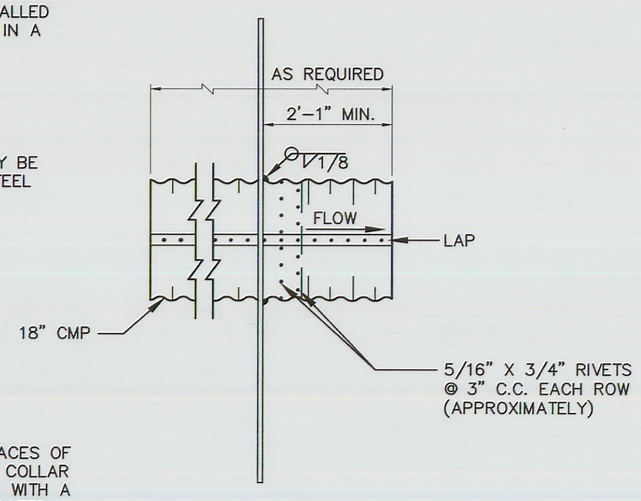

SECTION A-A

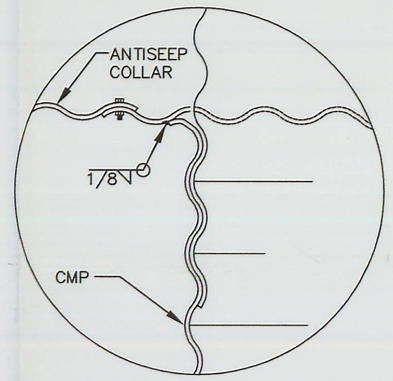

DETAIL OF WELDED JOINT

NOTES:

1. ANTI-SEEP COLLARS SHALL BE LOCATED WITHIN 18' OF PRIMARY SPILLWAY INLET AND OUTLET.
2. UNASSEMBLED ANTI-SEEP COLLARS SHALL BE MARKED BY PAINTING OR TAGGING TO IDENTIFY MATCHING SETS.
3. THE MIDDLE SECTION OF THE ANTI-SEEP COLLAR SHALL BE SHOP FABRICATED.
4. FLAT SHEETS OF EQUIVALENT THICKNESS AND/OR GAGE AND COATING MAY BE SUBSTITUTED FOR THE CORRUGATED METAL SHEETS.
5. IRON OR STEEL COLLAR THICKNESS SHALL BE 0.064", (16 GAGE), OR ALUMINUM ALLOY SHALL BE 0.060".

ANTI-SEEP COLLAR DETAIL (3/8)
NO SCALE

RECEIVED
OCT 22 2009
DIV. OF OIL, GAS & MINING

EarthFax Engineering, Inc.
Engineers/Scientists

AS SHOWN

SEAL:

REGISTERED PROFESSIONAL ENGINEER
No. 168246
RICHARD B. WHITE
STATE OF UTAH

DATE	No.	REVISIONS

WINTER QUARTERS VENTILATION
SEDIMENTATION POND
DETAILS

Canyon Fuel Company, LLC
Skyline Mines

P.O. BOX 719 HELPER, UTAH 84526
801-637-7925

CAD FILE: EF-C:\UC794-16\3.24-3H	DATE: 9-18-09	CK.BY:rbw
DWG. NO.: 3.2.4-3h	SCALE: AS SHOWN	DR.BY:st

REVISION: