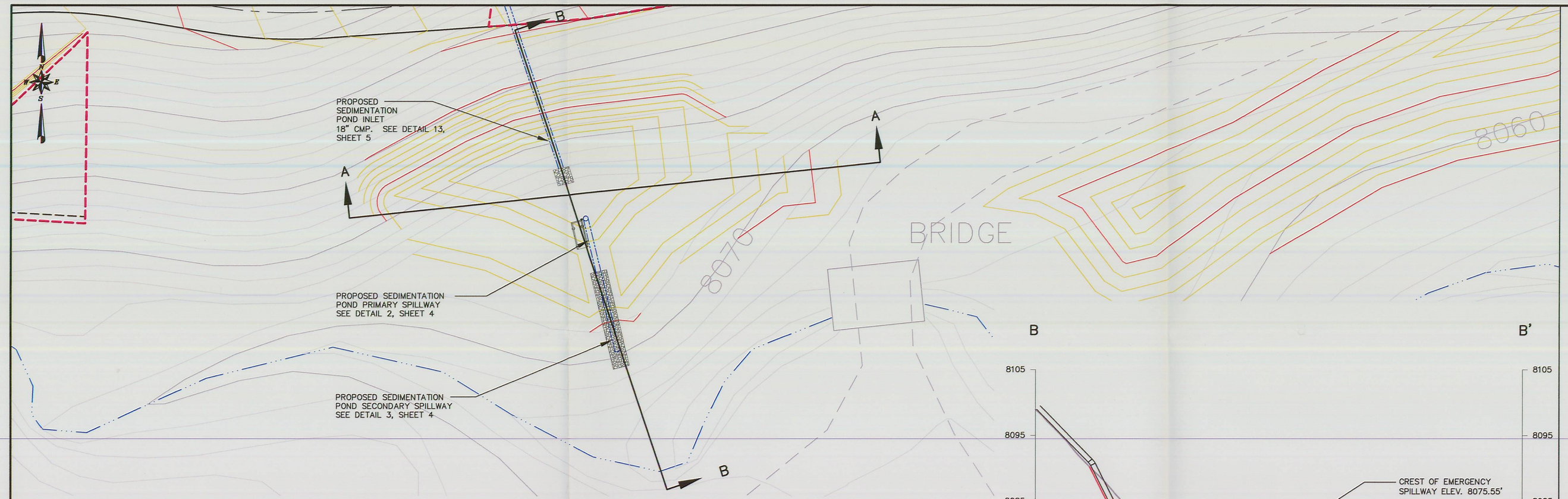

PLAN
1"=20'

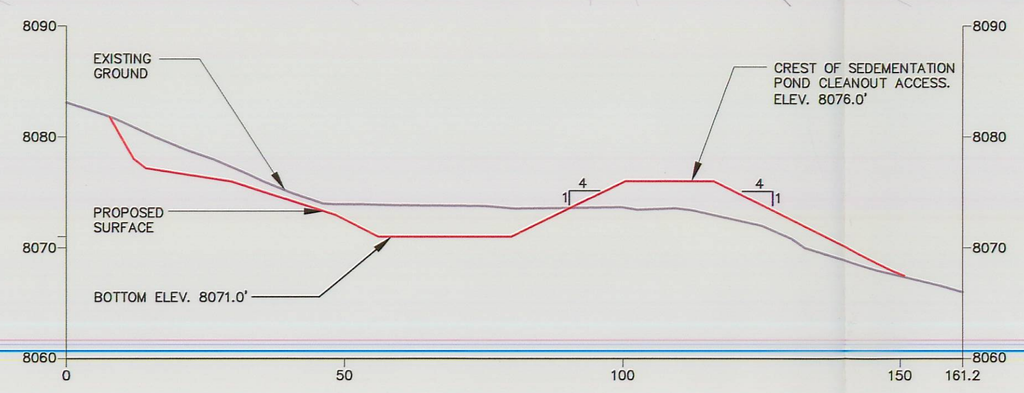

SECTION A–A'
HORZ: 1"=20'
VERT: 1"=10'

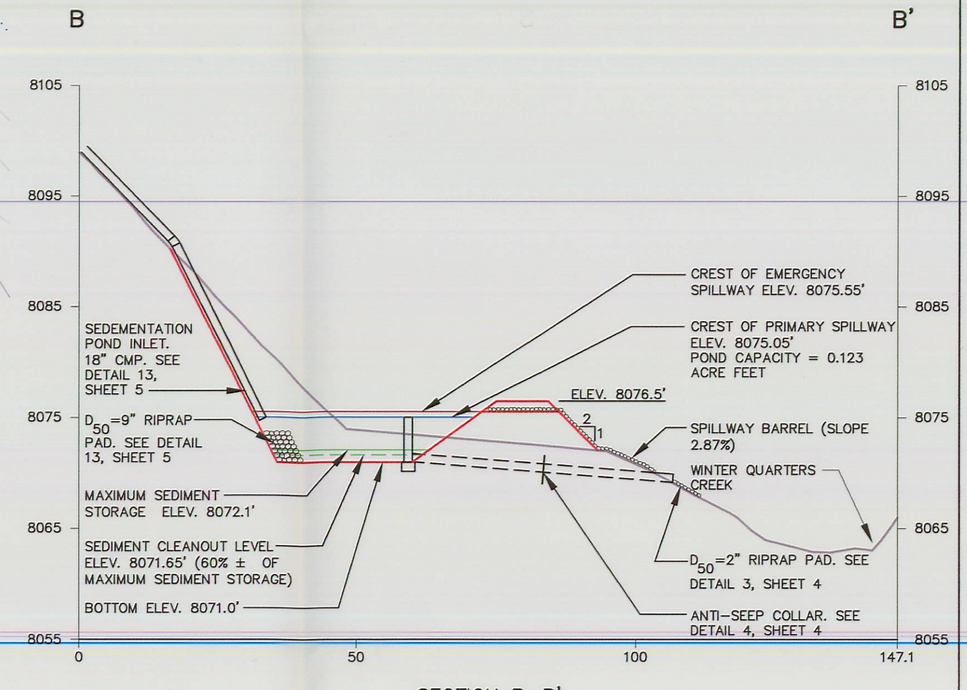

SECTION B–B'
HORZ: 1"=20'
VERT: 1"=10'

PROPOSED SEDIMENTATION POND (1/4)

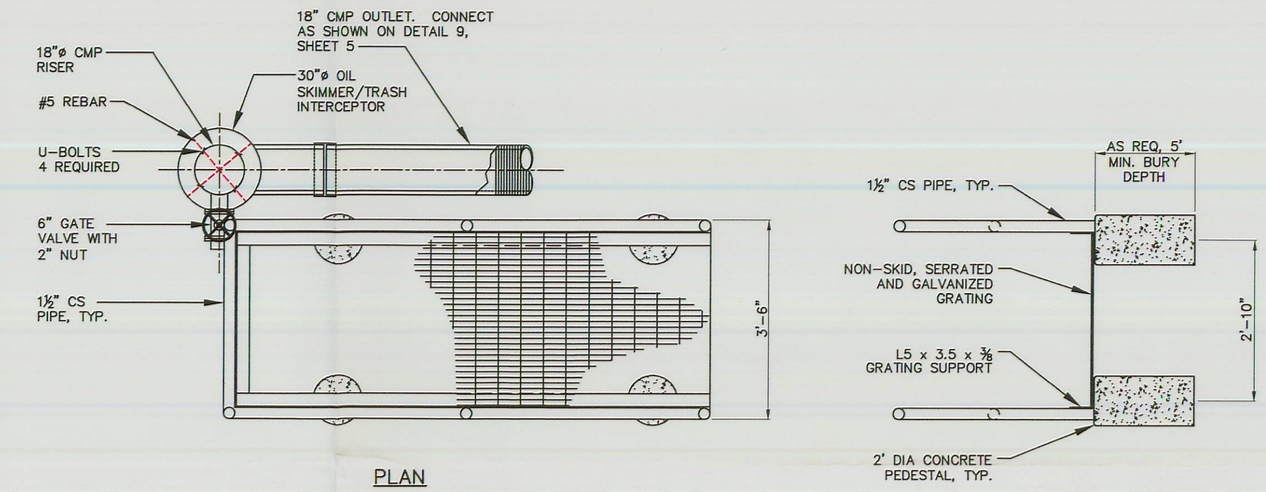

PLAN

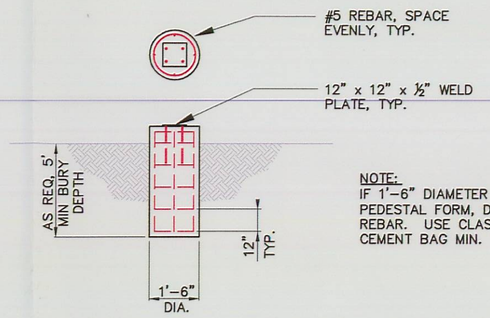

NOTE:
IF 1'-6" DIAMETER CMP IS USED FOR PEDESTAL FORM, DO NOT INSTALL HORIZONTAL REBAR. USE CLASS 3000# CONCRETE, 5.5 CEMENT BAG MIN.

PEDESTAL DETAIL

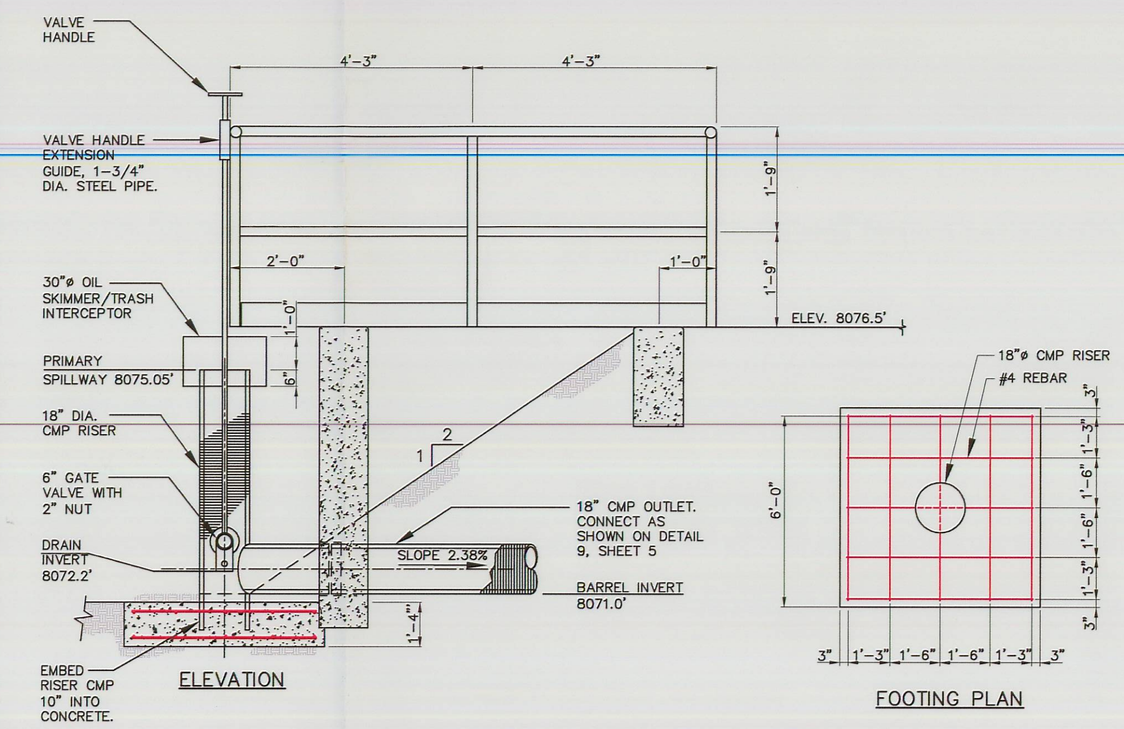

SEDIMENTATION POND PRIMARY SPILLWAY (2/4)
NO SCALE

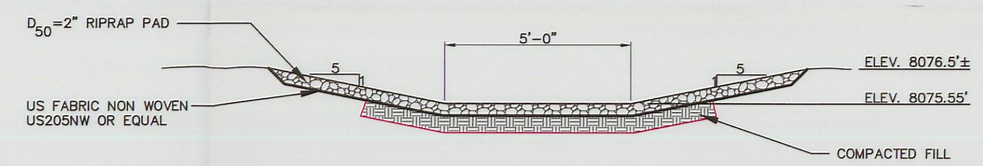

SEDIMENTATION POND SECONDARY SPILLWAY (3/4)
SCALE" 1' = 3'-0"

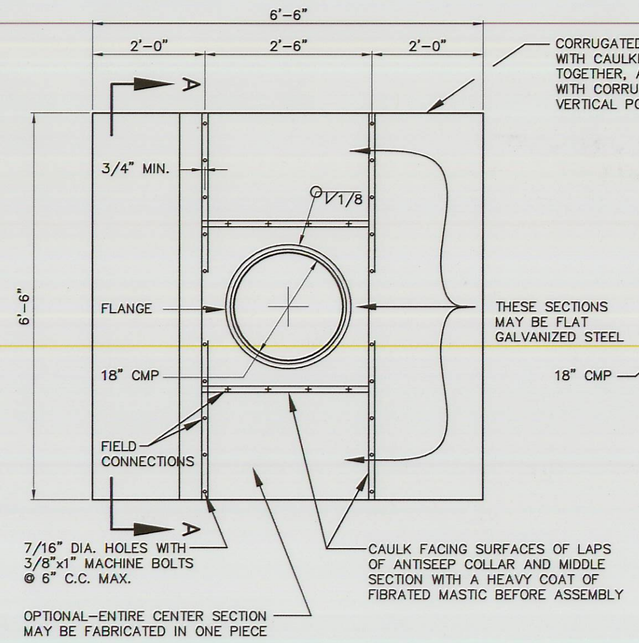

UPSTREAM ELEVATION

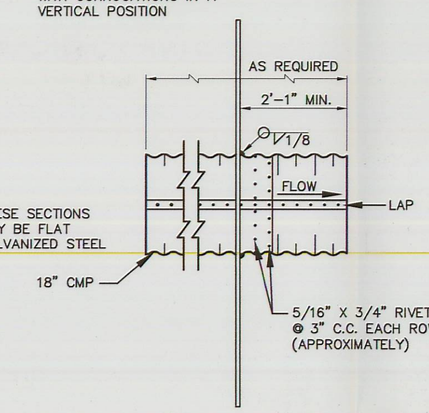

SECTION A–A

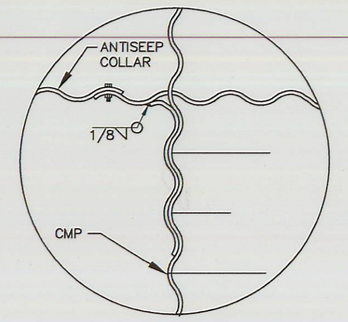

DETAIL OF WELDED JOINT

ANTI–SEEP COLLAR DETAIL (4/4)
NO SCALE

NOTES:

1. ANTI–SEEP COLLARS SHALL BE LOCATED WITHIN 20' OF THE PRIMARY SPILLWAY INLET AND OUTLET.
2. UNASSEMBLED ANTI–SEEP COLLARS SHALL BE MARKED BY PAINTING OR TAGGING TO IDENTIFY MATCHING PAIRS.
3. THE MIDDLE SECTION OF THE ANTISEEP COLLAR SHALL BE SHOP FABRICATED.
4. FLAT SHEETS OF EQUIVALENT THICKNESS AND/OR GAGE AND COATING MAY BE SUBSTITUTED FOR THE CORRUGATED METAL SHEETS.
5. IRON OR STEEL COLLAR THICKNESS SHALL BE 0.064", (16 GAGE), OR ALUMINUM ALLOY SHALL BE 0.060".

RECEIVED
JAN 11 2010
DIV. OF OIL, GAS & MINING

File in:
☐ Confidential
☒ Shelf
☐ Expandable
Refer to Record No. 0003 Date 01/07/2010
In C 0070005 2010 Winter Quarters
For additional information

AS SHOWN

EarthFax Engineering, Inc.
Engineers/Scientists

SEAL:
REGISTERED PROFESSIONAL ENGINEER
No. 168246
RICHARD B. WHITE
NOT VALID WITHOUT A SIGNATURE
STATE OF UTAH

DATE	No.	REVISIONS

WINTER QUARTERS VENTILATION SHAFT PAD
SEDIMENTATION POND PLAN,
SECTIONS AND DETAILS

Canyon Fuel Company, LLC
Skyline Mines

P.O. BOX 719 HELPER, UTAH 84526 801-637-7925	DATE: 01-07-10	CK.BY:rbw	REVISION:
CAD FILE: EF-G:\UC794-18\3.2.4-3D	SCALE: AS SHOWN	DR.BY:st	0
DWG. NO.: 3.2.4-3D	SHEET 4 OF 9		