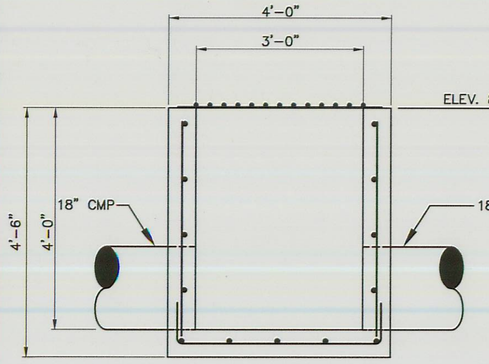


SIDE ELEVATION (UPPER ROAD)

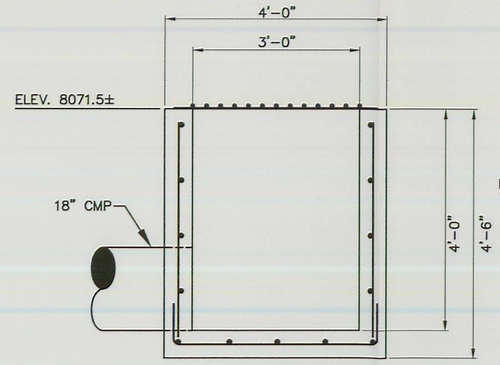


SIDE ELEVATION (ACCESS ROAD)

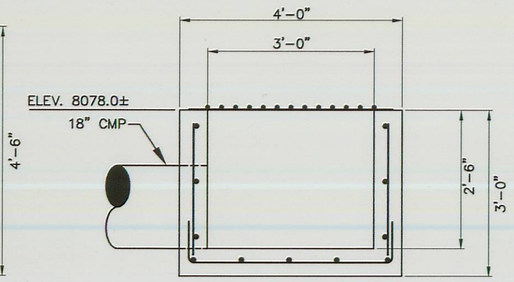


SIDE ELEVATION (ASCA)

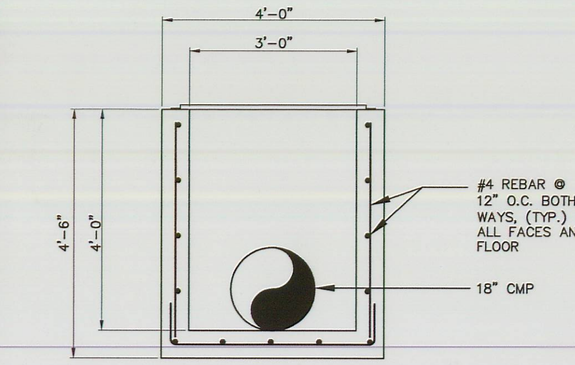


FRONT ELEVATION (UPPER AND ACCESS ROAD)

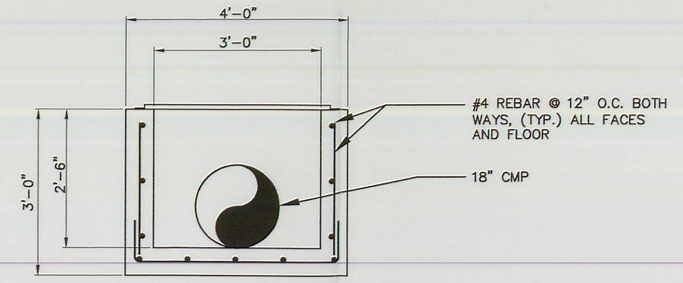


FRONT ELEVATION (ASCA)

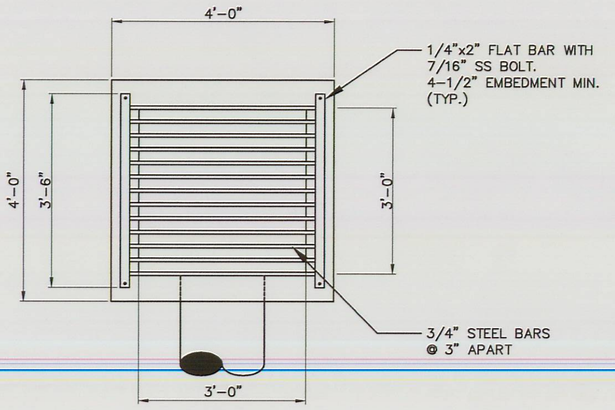


PLAN

NOTES:

1. INLET TO BE PRE-FABRICATED OR CAST IN PLACE CONCRETE.
2. INLET OPENING TO BE FABRICATED. REMOVABLE TRASH RACK WITH (13) # 6 REBAR AS SHOWN.
3. 2-1/2" COVER ON ALL REINFORCING STEEL.

TYPICAL CATCH BASIN DETAIL (1/6)

SCALE: 1" = 2'-0"

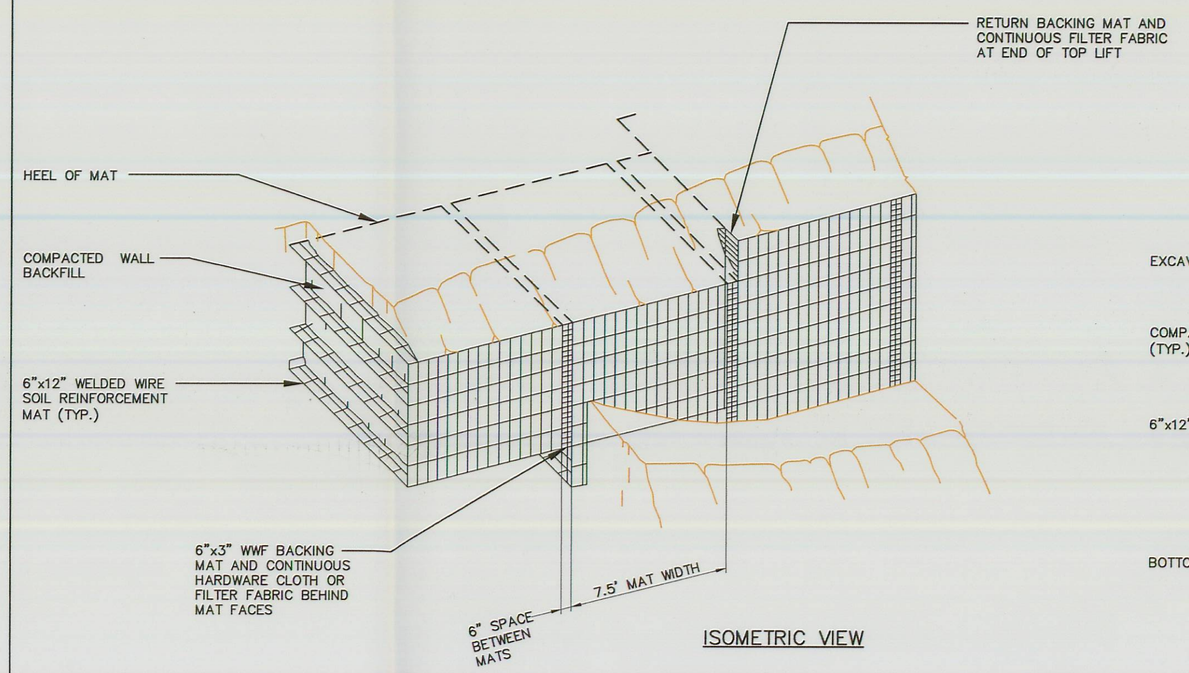


ISOMETRIC VIEW

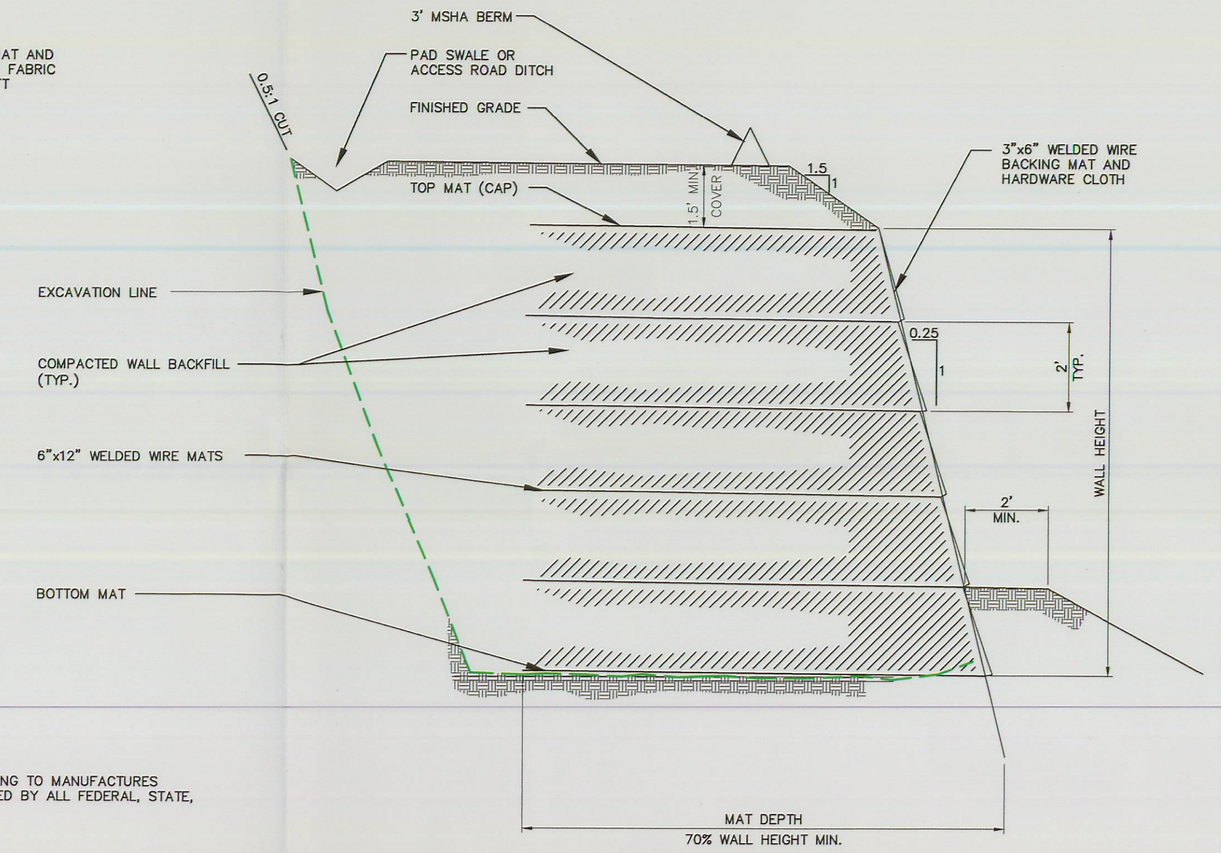


ELEVATION VIEW

NOTE:
INSTALLATION TO BE DONE ACCORDING TO MANUFACTURES RECOMMENDATIONS AND AS REQUIRED BY ALL FEDERAL, STATE, AND LOCAL REGULATIONS.

WELDED WIRE WALL DETAIL (3/6)

NO SCALE

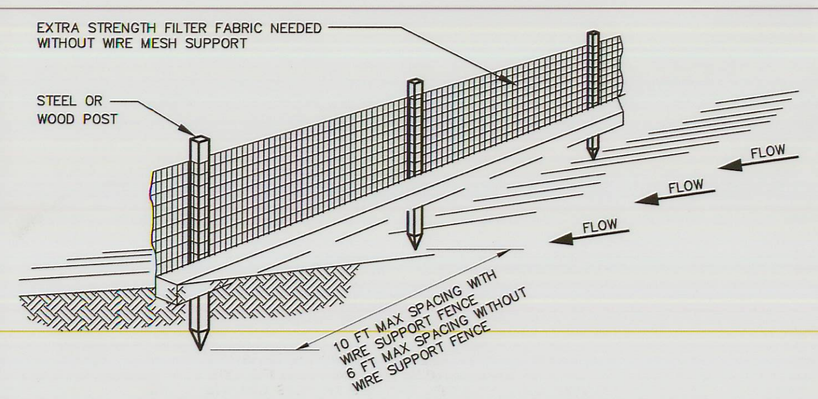


NOTES:

1. INSPECT AND REPAIR FENCE AFTER EACH STORM EVENT SEE PLAN VIEW.
2. REMOVED SEDIMENT SHALL BE DEPOSITED TO AN AREA THAT WILL NOT CONTRIBUTE SEDIMENT OFF-SITE AND CAN BE PERMANENTLY STABILIZED.
3. SILT FENCE SHALL BE PLACED ON SLOPE CONTOURS TO MAXIMIZE PONDING EFFICIENCY.

SILT FENCE DETAIL (2/6)

NTS

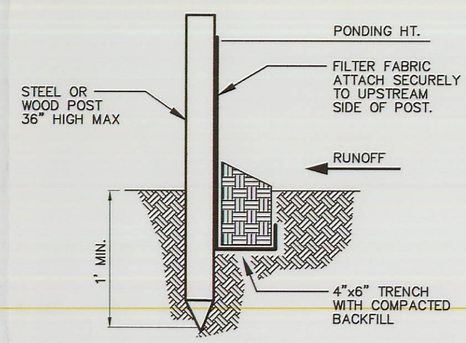


STANDARD DETAIL
TRENCH WITH NATIVE BACKFILL

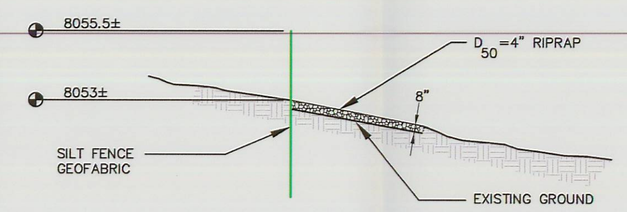


CROSS SECTION B-B'

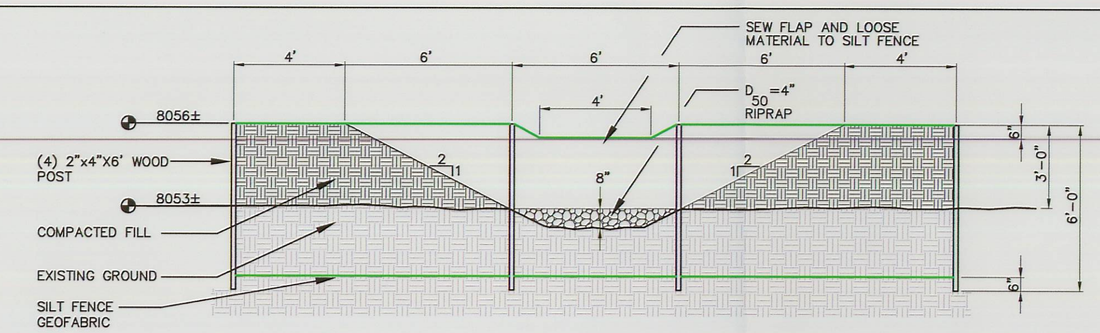


CROSS SECTION A

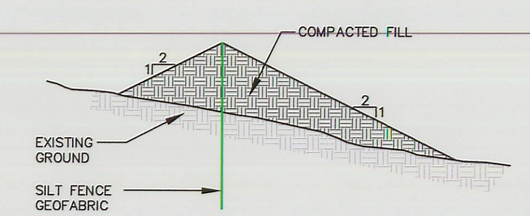


CROSS SECTION C-C'

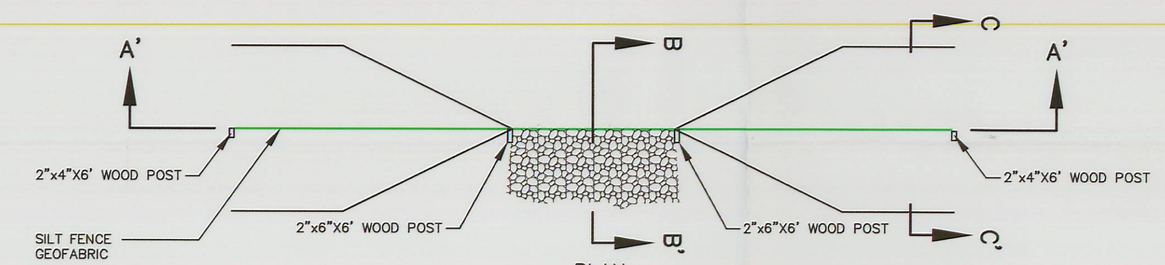


PLAN

TOPSOIL STOCKPILE SEDIMENT TRAP DETAIL (4/6)

NO SCALE

File in:
☐ Confidential
☒ Shelf
☐ Expandable
Refer to Record No. 0003 Date 01/07/2010
In C0070025 Dir Underground Ref
For additional information

RECEIVED
JAN 11 2010
DIV. OF OIL, GAS & MINING

EarthFax Engineering, Inc.
Engineers/Scientists

AS SHOWN

SEAL:
REGISTERED PROFESSIONAL ENGINEER
No. 168246
RICHARD B. WHITE
NOT VALID WITHOUT A SIGNATURE
STATE OF UTAH

| DATE | No. | REVISIONS |
|---|---|---|
| | | |

WINTER QUARTERS VENTILATION SHAFT PAD DRAINAGE AND RETAINING WALL DETAILS

Canyon Fuel Company, LLC
Skyline Mines

P.O. BOX 719 HELPER, UTAH 84526
801-637-7925

| | | | |
|---|---|---|---|
| CAD FILE: EF-G:\UC794-18\3.2.4-3F | DATE: 01-07-10 | CK.BY:rbw | REVISION: |
| | SCALE: AS SHOWN | DR.BY:swf | 0 |
| DWG. NO.: 3.2.4-3F | SHEET 6 OF 9 | | |