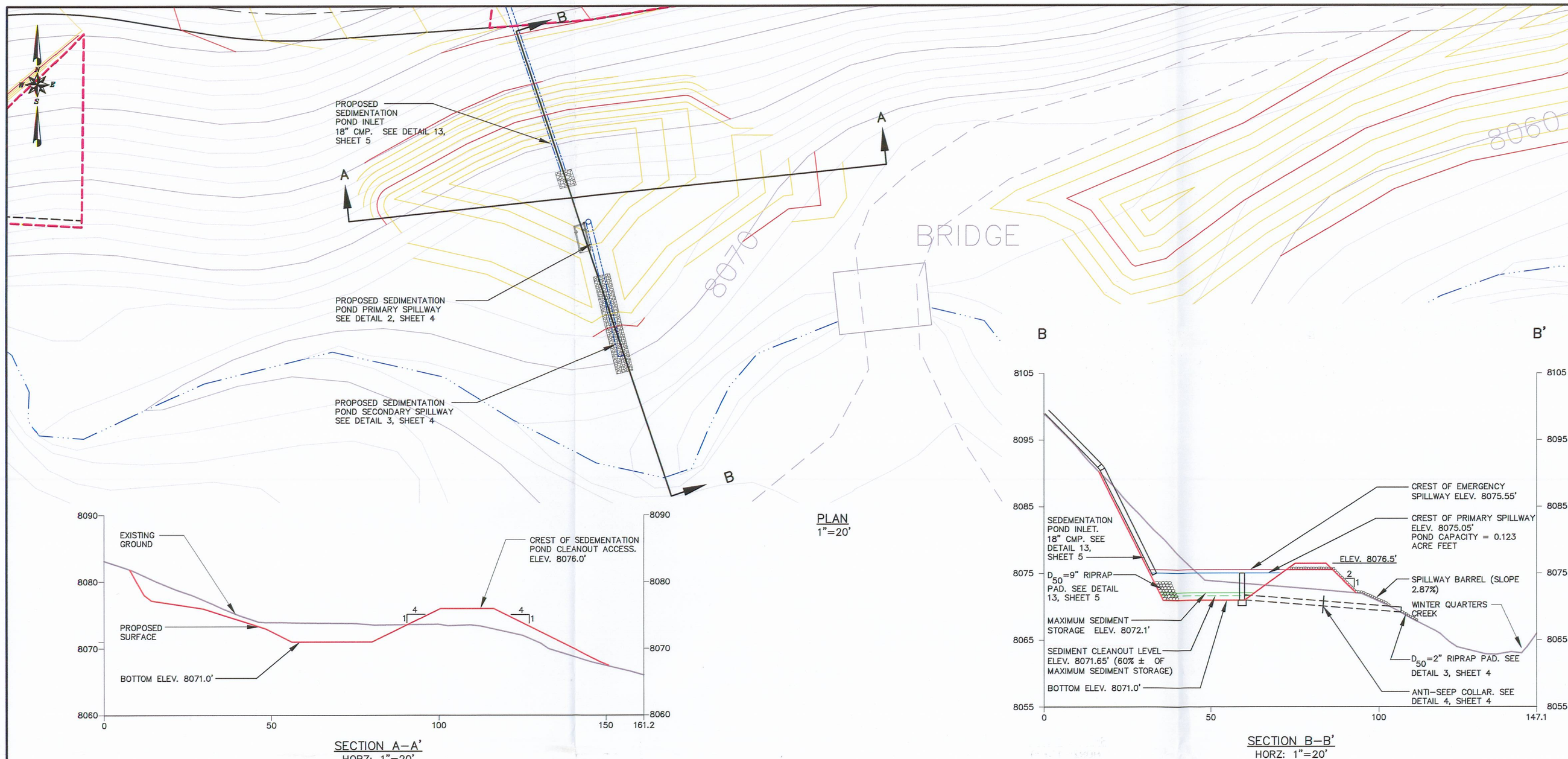

PROPOSED SEDIMENTATION POND (1/4)

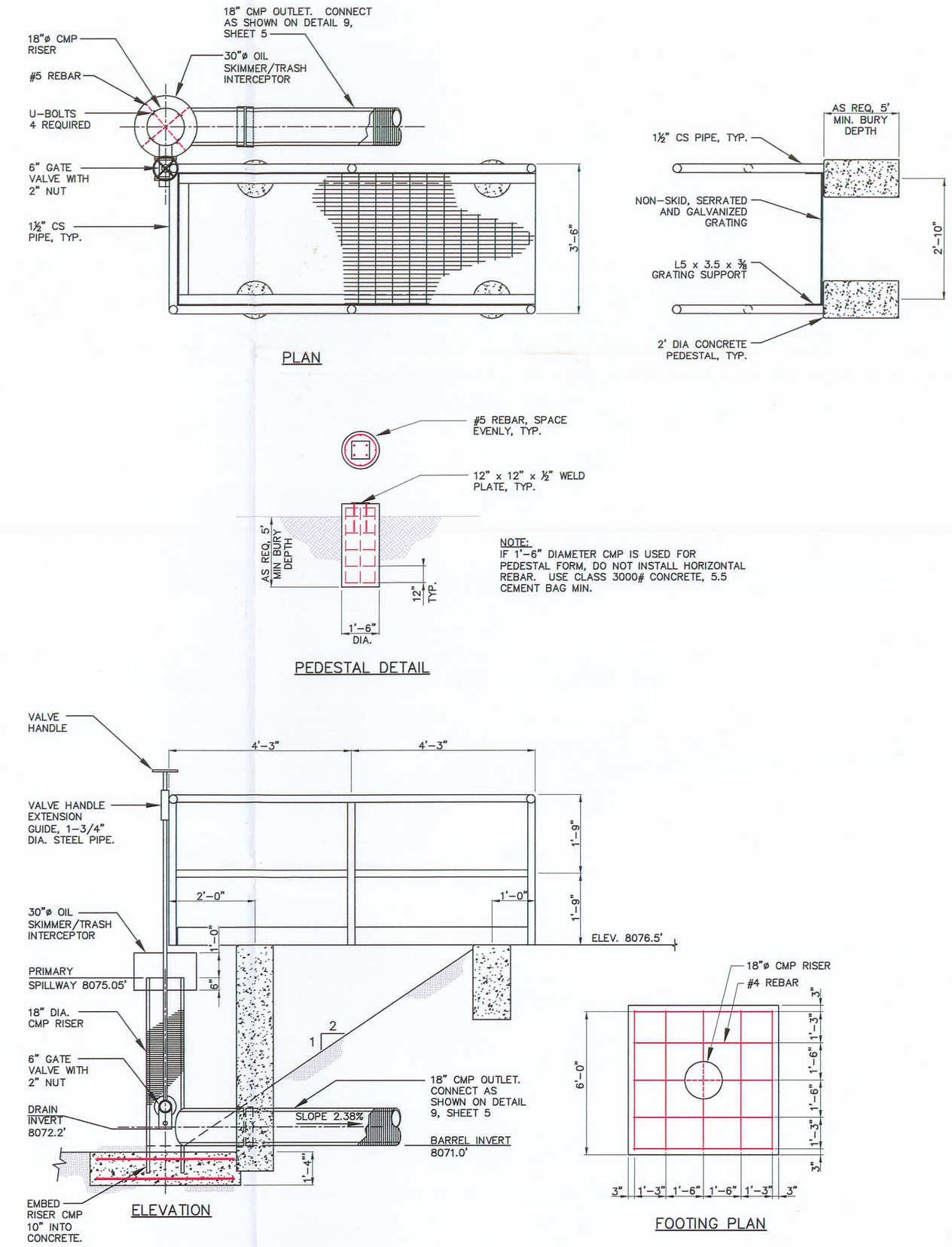

NOTE:
IF 1'-6" DIAMETER CMP IS USED FOR PEDESTAL FORM, DO NOT INSTALL HORIZONTAL REBAR. USE CLASS 3000# CONCRETE, 5.5 CEMENT BAG MIN.

SEDIMENTATION POND PRIMARY SPILLWAY (2/4)
NO SCALE

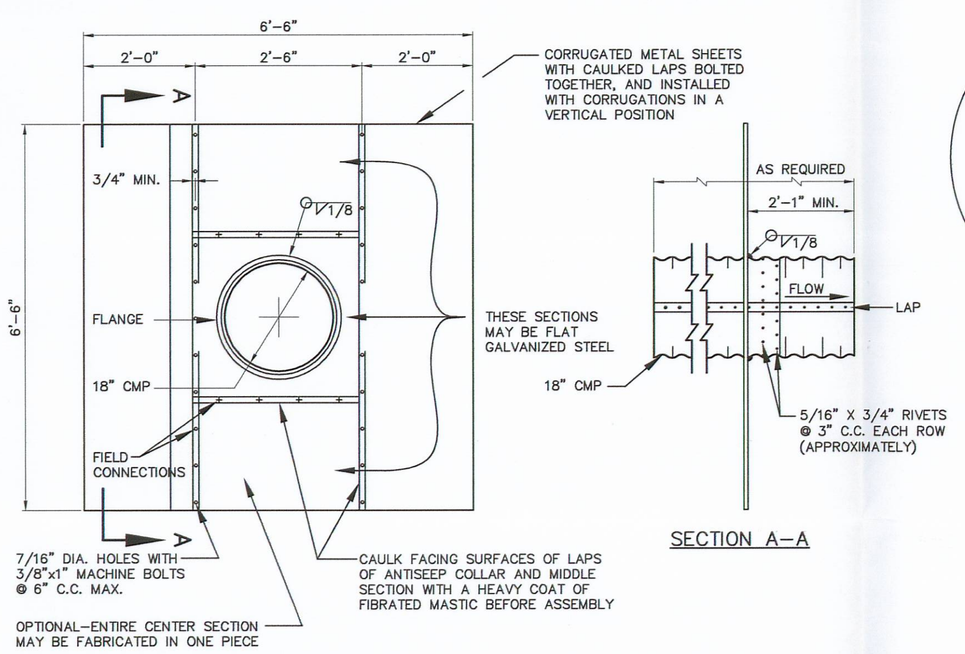

NOTES:

1. ANTI–SEEP COLLARS SHALL BE LOCATED WITHIN 20' OF THE PRIMARY SPILLWAY INLET AND OUTLET.
2. UNASSEMBLED ANTI–SEEP COLLARS SHALL BE MARKED BY PAINTING OR TAGGING TO IDENTIFY MATCHING PAIRS.
3. THE MIDDLE SECTION OF THE ANTISEEP COLLAR SHALL BE SHOP FABRICATED.
4. FLAT SHEETS OF EQUIVALENT THICKNESS AND/OR GAGE AND COATING MAY BE SUBSTITUTED FOR THE CORRUGATED METAL SHEETS.
5. IRON OR STEEL COLLAR THICKNESS SHALL BE 0.064", (16 GAGE), OR ALUMINUM ALLOY SHALL BE 0.060".

ANTI–SEEP COLLAR DETAIL (4/4)
NO SCALE

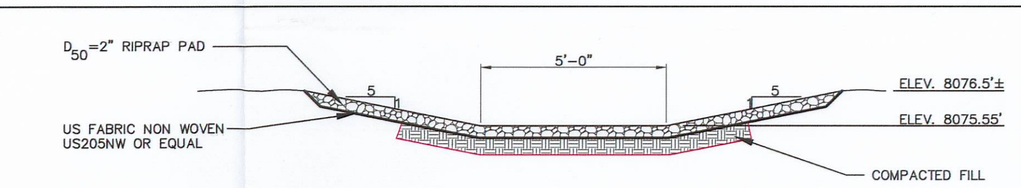

SEDIMENTATION POND SECONDARY SPILLWAY (3/4)
SCALE" 1' = 3'-0"

RECEIVED
MAR 24 2010
DIV. OF OIL, GAS & MINING

RECEIVED
JAN 11 2010
DIV. OF OIL, GAS & MINING

EarthFax Engineering, Inc.
Engineers/Scientists

File in:
☐ Confidential
☒ Shelf
☐ Expandable
Refer to Record No. 0018 Date 03/10/2010
In C0070025.012 Wildcat Loop
For additional information

AS SHOWN

SEAL:
REGISTERED PROFESSIONAL ENGINEER
No. 168246
RICHARD B. WHITE
NOT VALID WITHOUT A SIGNATURE
STATE OF UTAH

DATE	No.	REVISIONS

WINTER QUARTERS VENTILATION SHAFT PAD
SEDIMENTATION POND PLAN, SECTIONS AND DETAILS

Canyon Fuel Company, LLC
Skyline Mines

P.O. BOX 719 HELPER, UTAH 84526 801-637-7925
CAD FILE: EF-G:\UC794-18\3.2.4-3D
DWG. NO.: 3.2.4-3D
DATE: 01-07-10
SCALE: AS SHOWN
CK.BY: rbw
DR.BY: st
SHEET 4 OF 9
REVISION: 0