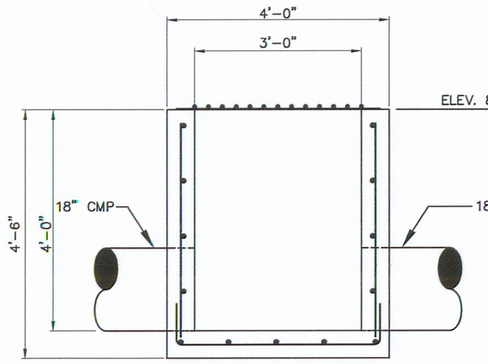

SIDE ELEVATION (UPPER ROAD)

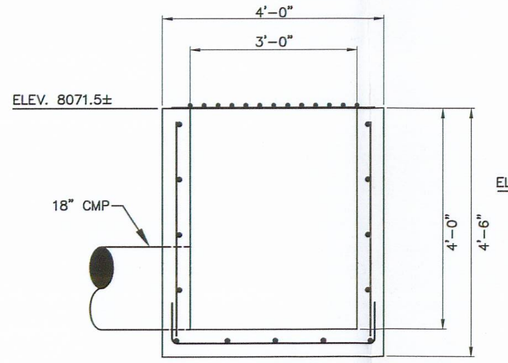

SIDE ELEVATION (ACCESS ROAD)

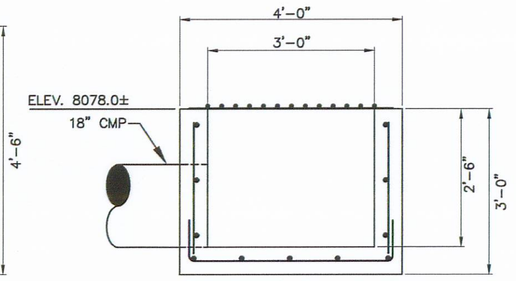

SIDE ELEVATION (ASCA)

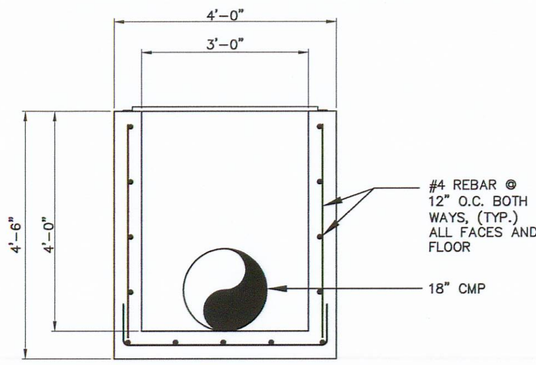

FRONT ELEVATION (UPPER AND ACCESS ROAD)

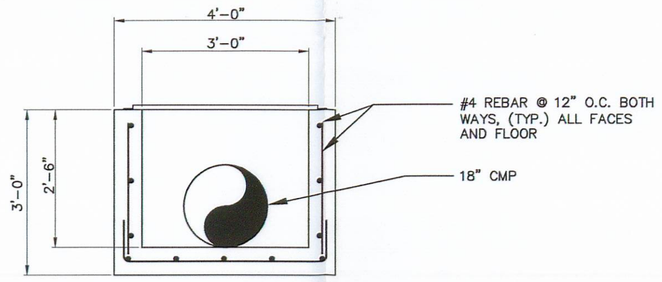

FRONT ELEVATION (ASCA)

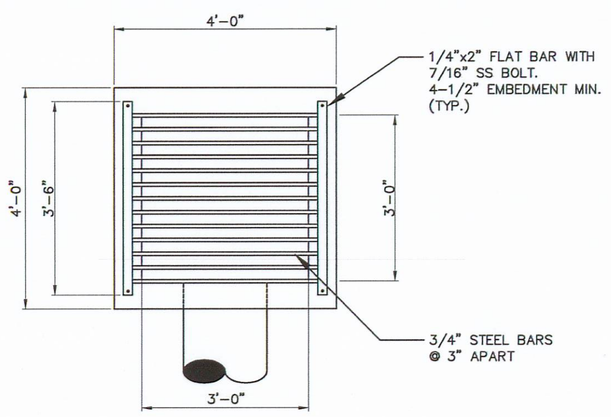

PLAN

NOTES:

1. INLET TO BE PRE-FABRICATED OR CAST IN PLACE CONCRETE.
2. INLET OPENING TO BE FABRICATED. REMOVABLE TRASH RACK WITH (13) # 6 REBAR AS SHOWN.
3. 2-1/2" COVER ON ALL REINFORCING STEEL.

TYPICAL CATCH BASIN DETAIL (1/6)

SCALE: 1" = 2'-0"

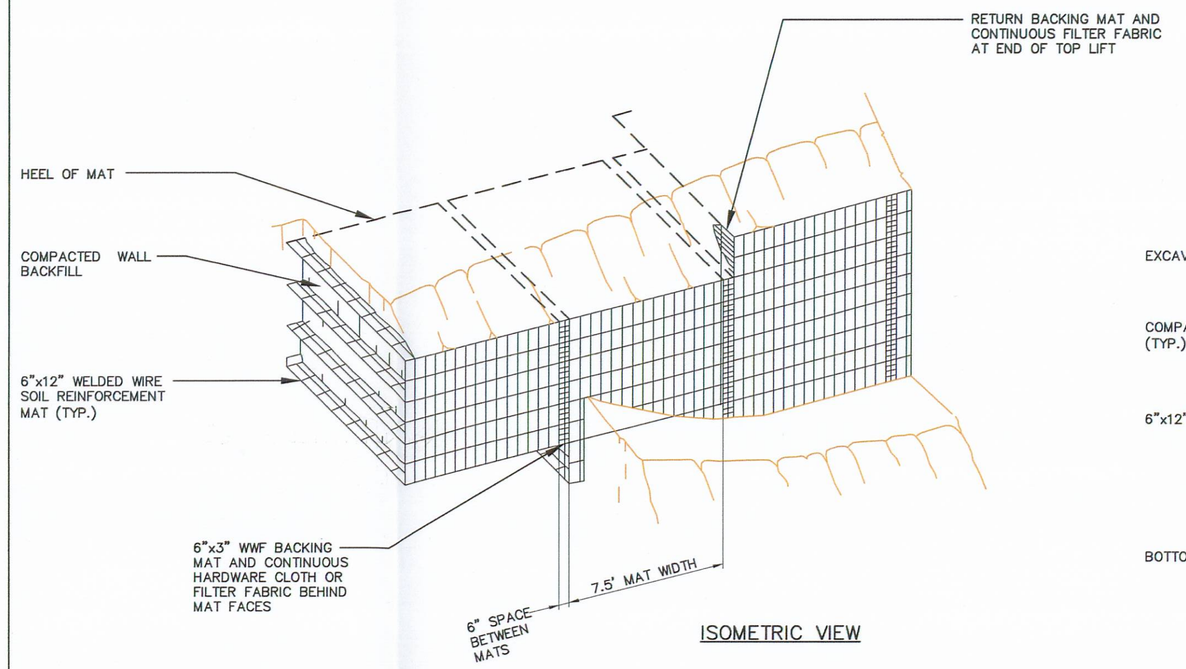

ISOMETRIC VIEW

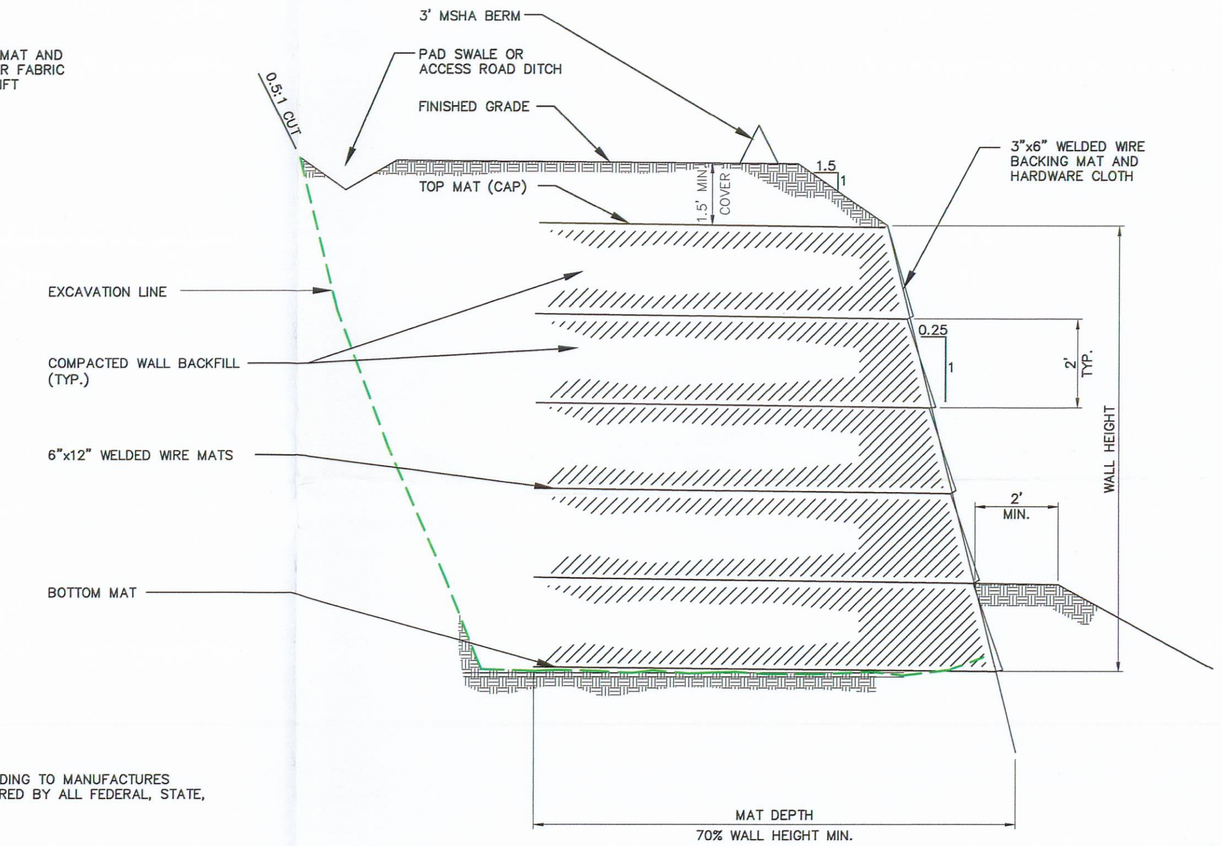

ELEVATION VIEW

NOTE:
INSTALLATION TO BE DONE ACCORDING TO MANUFACTURES RECOMMENDATIONS AND AS REQUIRED BY ALL FEDERAL, STATE, AND LOCAL REGULATIONS.

WELDED WIRE WALL DETAIL (3/6)

NO SCALE

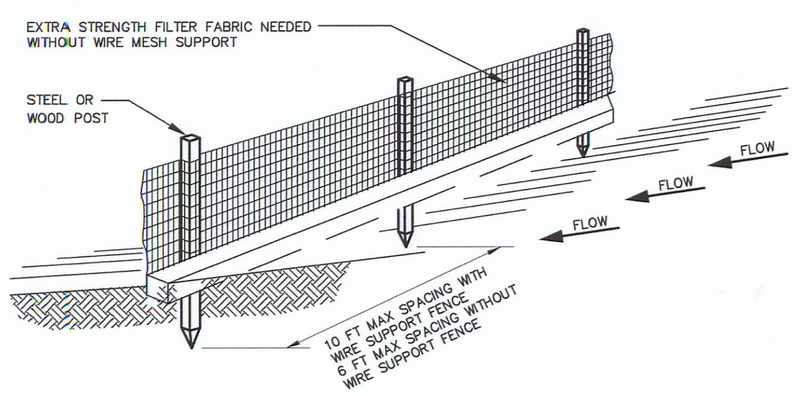

NOTES:

1. INSPECT AND REPAIR FENCE AFTER EACH STORM EVENT SEE PLAN VIEW.
2. REMOVED SEDIMENT SHALL BE DEPOSITED TO AN AREA THAT WILL NOT CONTRIBUTE SEDIMENT OFF-SITE AND CAN BE PERMANENTLY STABILIZED.
3. SILT FENCE SHALL BE PLACED ON SLOPE CONTOURS TO MAXIMIZE PONDING EFFICIENCY.

SILT FENCE DETAIL (2/6)

NTS

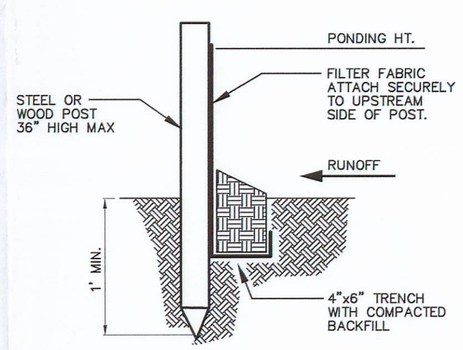

STANDARD DETAIL
TRENCH WITH NATIVE BACKFILL

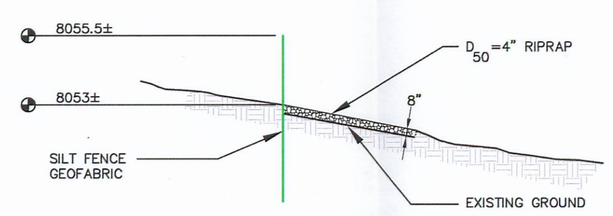

CROSS SECTION B-B'

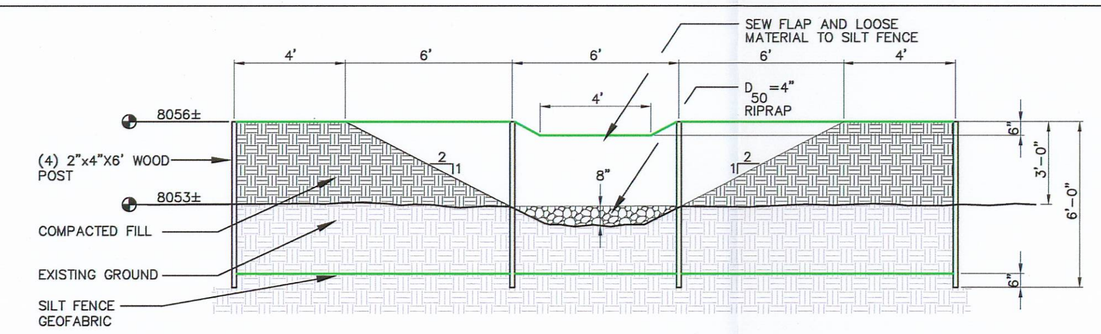

CROSS SECTION A

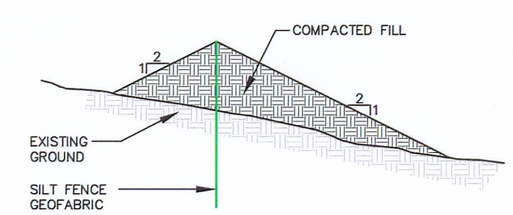

CROSS SECTION C-C'

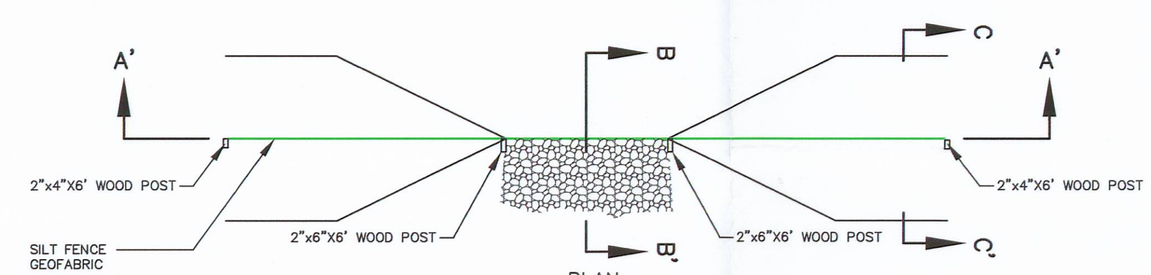

PLAN

TOPSOIL STOCKPILE SEDIMENT TRAP DETAIL (4/6)

NO SCALE

RECEIVED
MAR 24 2010
DIV. OF OIL, GAS & MINING

RECEIVED
JAN 11 2010
DIV. OF OIL, GAS & MINING

File in:
☐ Confidential
☒ Shelf
☐ Expandable
Refer to Record No. 0018 Date 2/24/2010
In C0070005, 2010 Incoming
For additional information

EarthFax Engineering, Inc.
Engineers/Scientists

AS SHOWN

SEAL:

REGISTERED PROFESSIONAL ENGINEER
No. 168246
RICHARD B. WHITE
STATE OF UTAH

DATE	No.	REVISIONS

WINTER QUARTERS VENTILATION SHAFT PAD
DRAINAGE AND RETAINING WALL DETAILS

Canyon Fuel Company, LLC
Skyline Mines

P.O. BOX 719 HELPER, UTAH 84526 801-637-7925	DATE: 01-07-10	CK.BY:rbw	REVISION: 0
CAD FILE: EF-G:\UC794-18\3.2.4-3F	SCALE: AS SHOWN	DR.BY:swf	
DWG. NO.: 3.2.4-3F	SHEET 6 OF 9		