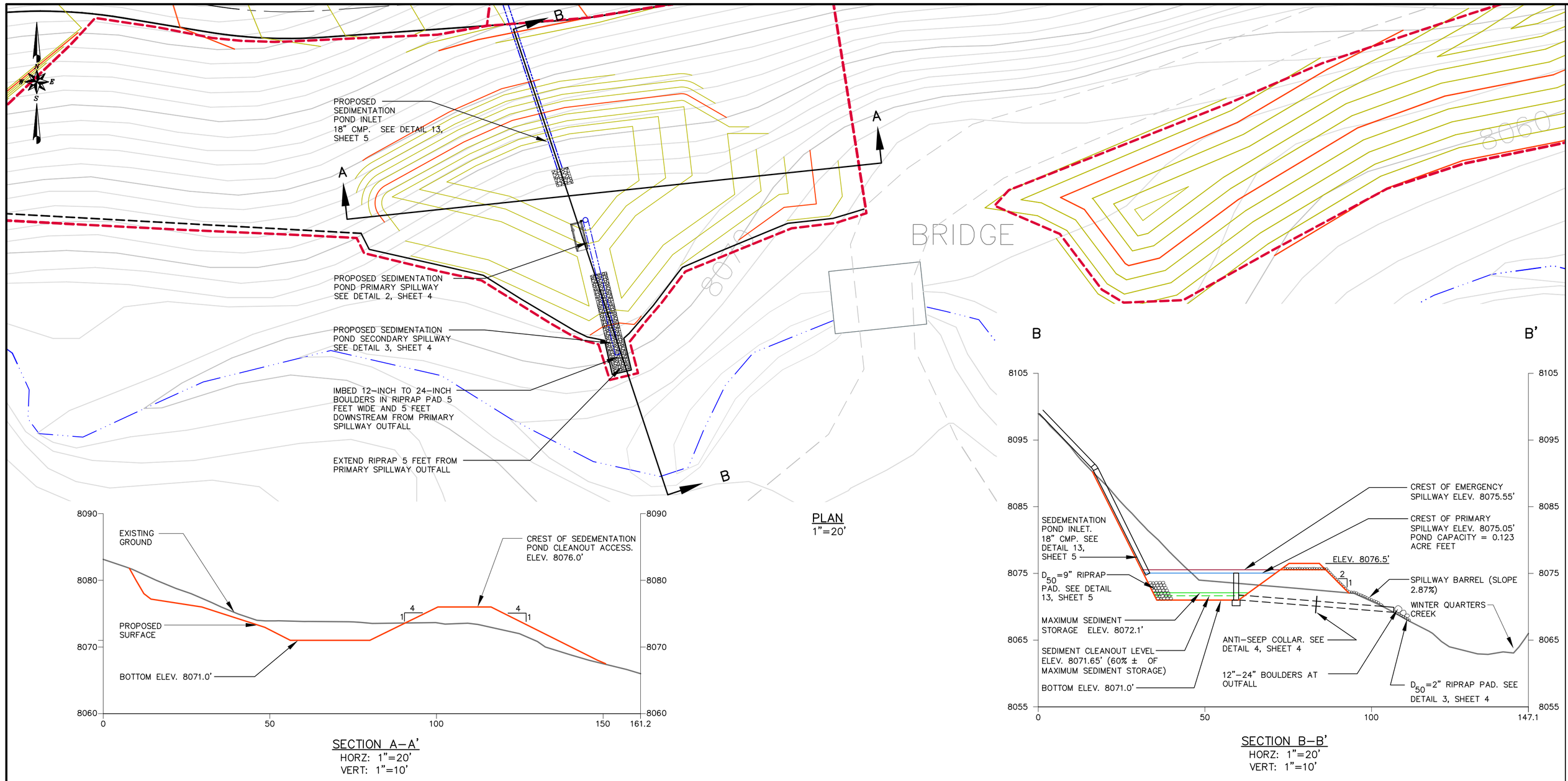

PLAN
1"=20'

SECTION A–A'
HORZ: 1"=20'
VERT: 1"=10'

SECTION B–B'
HORZ: 1"=20'
VERT: 1"=10'

PROPOSED SEDIMENTATION POND 1/4

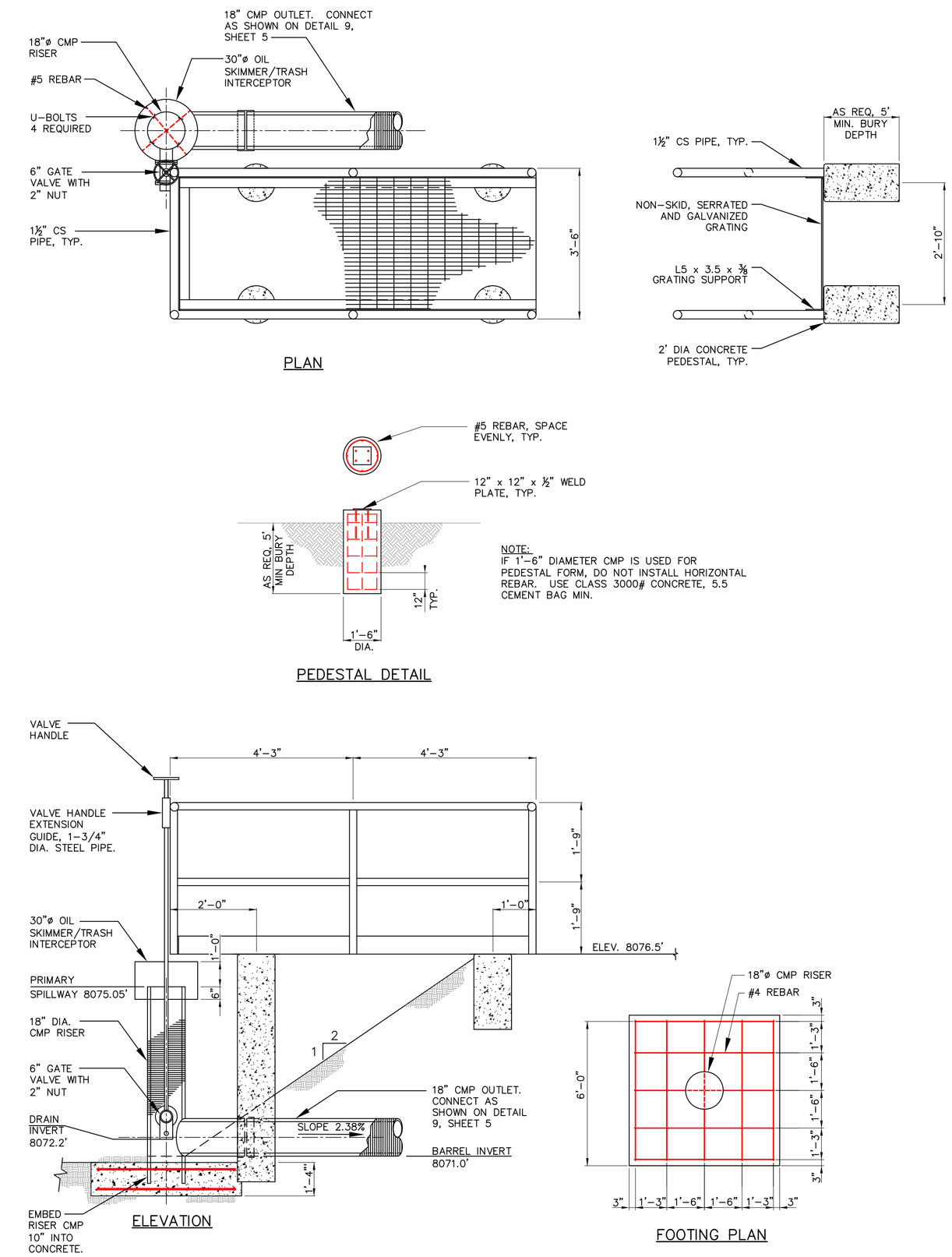

PLAN

PEDESTAL DETAIL

ELEVATION

FOOTING PLAN

SEDIMENTATION POND PRIMARY SPILLWAY 2/4
NO SCALE

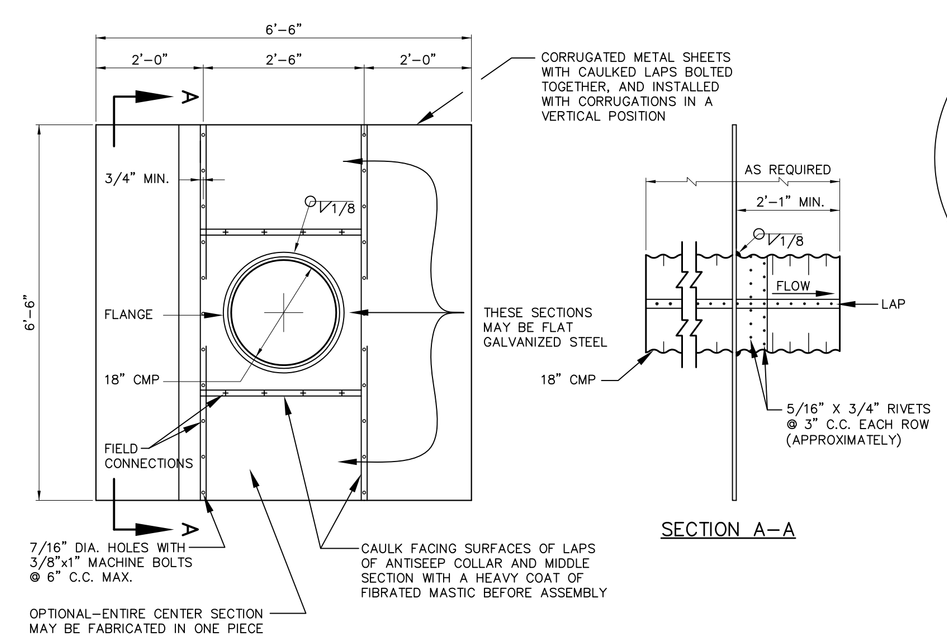

UPSTREAM ELEVATION

SECTION A–A

DETAIL OF WELDED JOINT

NOTES:

1. ANTI-SEEP COLLARS SHALL BE LOCATED WITHIN 20' OF THE PRIMARY SPILLWAY INLET AND OUTLET.
2. UNASSEMBLED ANTI-SEEP COLLARS SHALL BE MARKED BY PAINTING OR TAGGING TO IDENTIFY MATCHING PAIRS.
3. THE MIDDLE SECTION OF THE ANTISEEP COLLAR SHALL BE SHOP FABRICATED.
4. FLAT SHEETS OF EQUIVALENT THICKNESS AND/OR GAGE AND COATING MAY BE SUBSTITUTED FOR THE CORRUGATED METAL SHEETS.
5. IRON OR STEEL COLLAR THICKNESS SHALL BE 0.064", (16 GAGE), OR ALUMINUM ALLOY SHALL BE 0.060".

ANTI-SEEP COLLAR DETAIL 4/4
NO SCALE

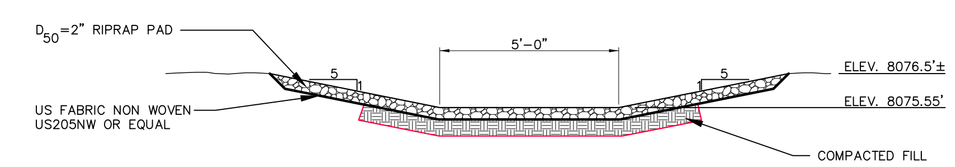

SEDIMENTATION POND SECONDARY SPILLWAY 3/4
SCALE" 1' = 3'-0"

EarthFax Engineering, Inc.
Engineers/Scientists

AS SHOWN

SEAL:

REGISTERED PROFESSIONAL ENGINEER
No. 168246
RICHARD B. WHITE
NOT VALID WITHOUT A SIGNATURE
STATE OF UTAH

DATE	No.	REVISIONS

WINTER QUARTERS VENTILATION SHAFT PAD
SEDIMENTATION POND PLAN,
SECTIONS AND DETAILS

Canyon Fuel Company, LLC
Skyline Mines

P.O. BOX 719 HELPER, UTAH 84526
801-637-7925

CAD FILE: EF-G:\UC794-18\3.2.4-3D	DATE: 06-01-10	CK.BY: rbw
DWG. NO.: 3.2.4-3D	SCALE: AS SHOWN	DR.BY: st
	SHEET 4 OF 9	REVISION: 0