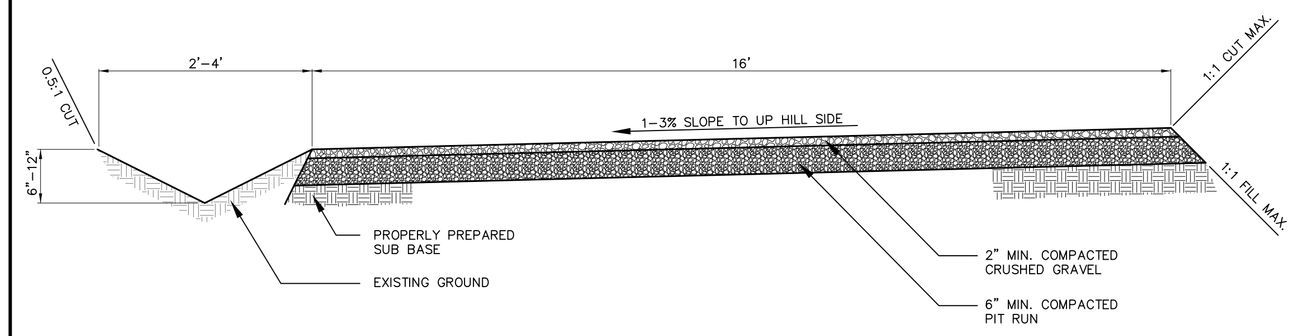

TYPICAL ACCESS ROAD CROSS SECTION (1/5)

SCALE: 1" = 2'-0"

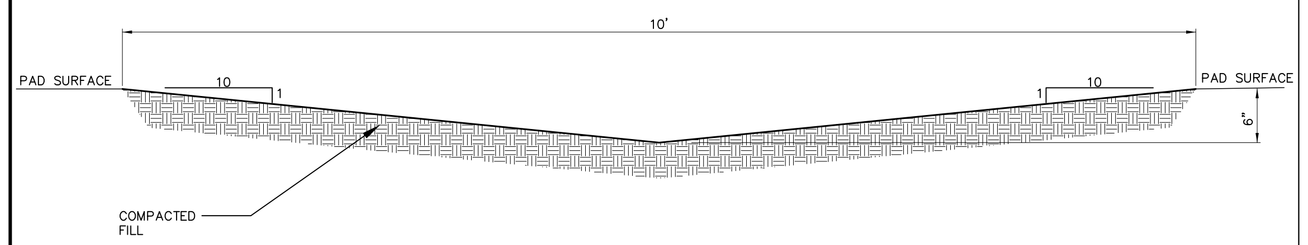

TYPICAL PAD SWALE CROSS SECTION (2/5)

SCALE: 1' = 1'-0"

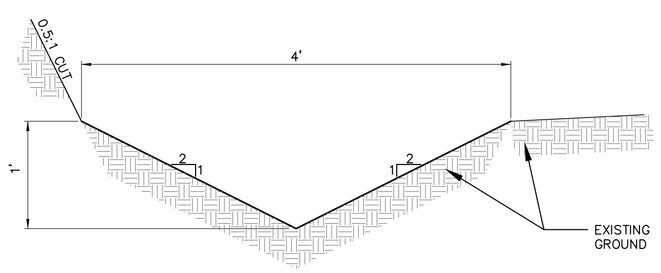

TYPICAL ACCESS ROAD DITCH CROSS SECTION (3/5)

SCALE: 1' = 1'-0"

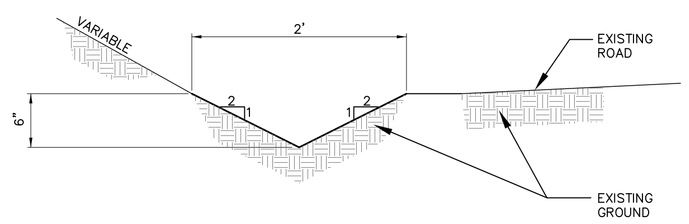

TYPICAL UPPER ROAD DITCH CROSS SECTION (4/5)

SCALE: 1' = 1'-0"

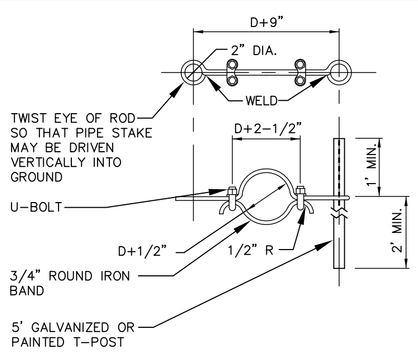

NOTES:

1. USE SPECIFIED DIAMETER-CORRUGATED PLASTIC PIPE WITH WATER TIGHT BELL AND SPIGOT CONNECTIONS.
2. PLACE PIPE ANCHORS ON EACH SIDE OF ELBOW AND AT BOTH UPSTREAM AND DOWN STREAM END OF PIPE CONNECTIONS.
3. PIPE ANCHOR CONSISTS OF AN IRON BAND, 2 T-POSTS, AND ALL NECESSARY HARDWARE.

PIPE ANCHOR DETAIL (10/5)

NO SCALE

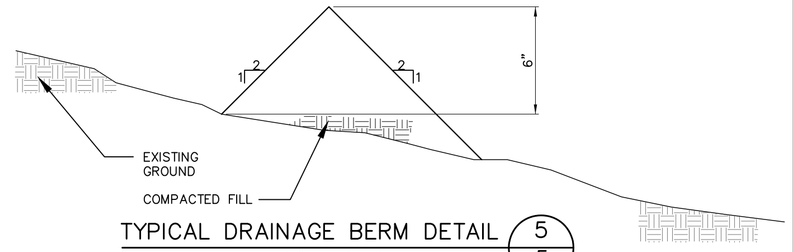

TYPICAL DRAINAGE BERM DETAIL (5/5)

1/2" = 1'-0"

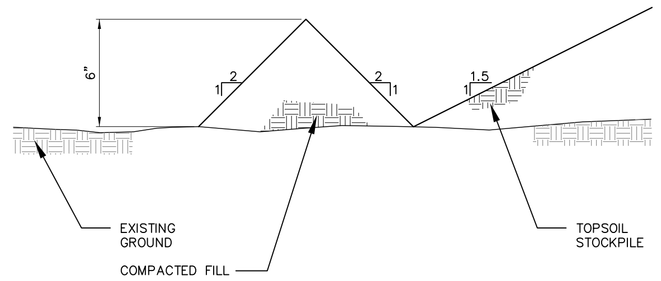

TYPICAL TOPSOIL BERM DETAIL (6/5)

1/2" = 1'-0"

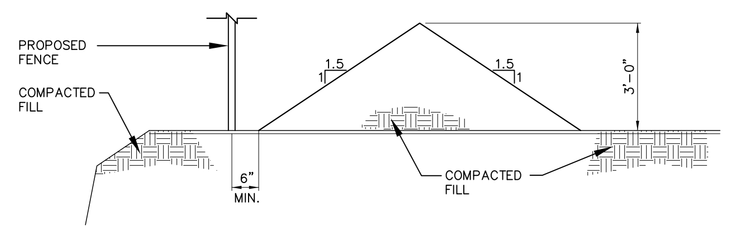

TYPICAL PAD BERM DETAIL (7/5)

SCALE: 1" = 2'-0"

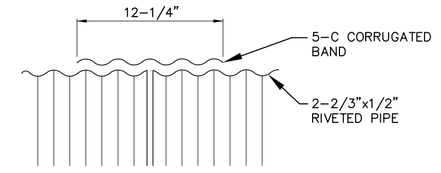

SECTION

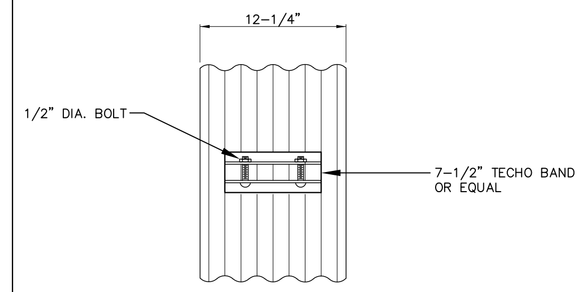

CONNECTION

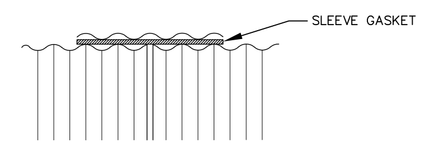

SECTION

NOTES:

1. BANDS ARE NORMALLY FURNISHED AS FOLLOWS:
   12" THRU 48" 1-PIECE
   54" THRU 96" 2-PIECE
2. BAND FASTENERS ARE ATTACHED WITH SPOT WELD RIVETS OR HAND WELDS.
3. DIMENSIONS ARE SUBJECT TO MANUFACTURING TOLERANCES.

CORRUGATED BAND DETAIL (8/5)

NO SCALE

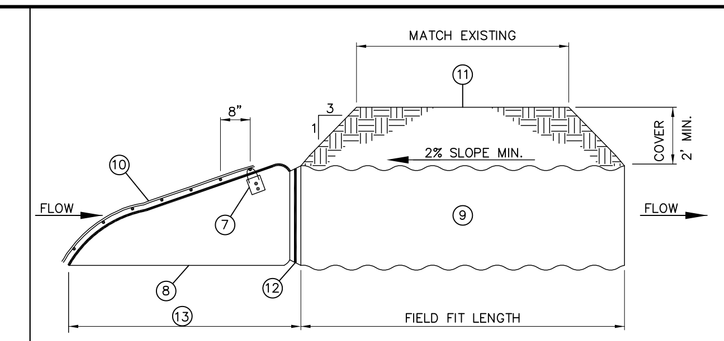

FRONT ELEVATION

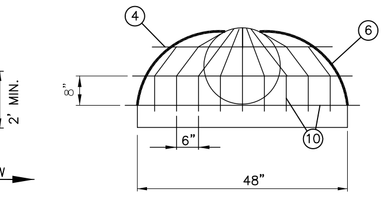

SIDE ELEVATION

MATERIALS LIST FOR CULVERT/END SECTION

1. #4 REBAR
2. ½"ø STAINLESS STEEL BOLT/NUT. (TYP).
3. 10 GAGE STEEL STRAPS (TYP).
4. OVERLAP BARS 4" PAST EDGE OF END SECTION (TYP).
5. WELD EACH CROSS JOINT (TYP).
6. REINFORCED EDGE ON END SECTION (TYP)
7. TRASH RACK HINGE.
8. FLARED STEEL CMP END SECTION, MINIMUM WALL THICKNESS 0.064" OR 16 GAGE
9. CMP, MINIMUM WALL THICKNESS PER TABLE.
10. HINGED TRASH RACK (TYP).
11. ACCESS ROAD OR OTHER COVER.
12. ½"ø, PLACE THREADED ROD OVER TOP OF END SECTION.
13. FOR SLOPES STEEPER THAN 4:1 THE LENGTH IS 32" FOR SLOPES SHALLOWER THAN 6:1 THE LENGTH IS 48"

NOTES:

1. PROVIDE HINGED SAFETY BARS (TRASH RACK) ON INFLOW SIDE OF CULVERT.
2. PROVIDE FLARED END SECTIONS ON BOTH ENDS OF CULVERT.
3. INSTALL CULVERT ASSEMBLY INTO EXISTING FLOW CHANNEL. REPAIR CHANNEL AS REQUIRED TO INSTALL CULVERT ASSEMBLY AS DIRECTED BY OWNER OR ENGINEER.
4. ALL SAFETY BARS (TRASH RACK) AND COMPONENTS SHALL HAVE A CORROSION PROTECTIVE FINISH.

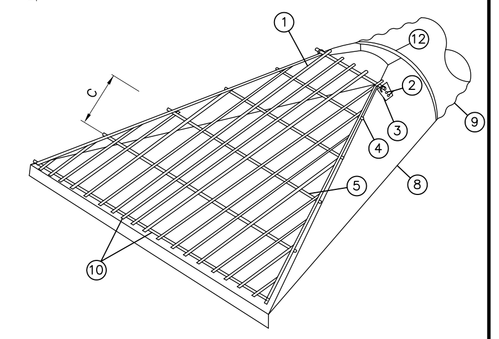

ISOMETRIC ELEVATION

NOTE:

ROLL EDGE OF SIDEWALL SNUGLY AGAINST STEEL. ½"ø GALVANIZED STEEL ROD OR #4 GALVANIZED REINFORCING BAR.

SECTION VIEW OF EDGE OF FLARED CMP ASSEMBLY

UPPER ROAD CULVERT INLET TRASH RACK DETAIL (9/5)

NO SCALE

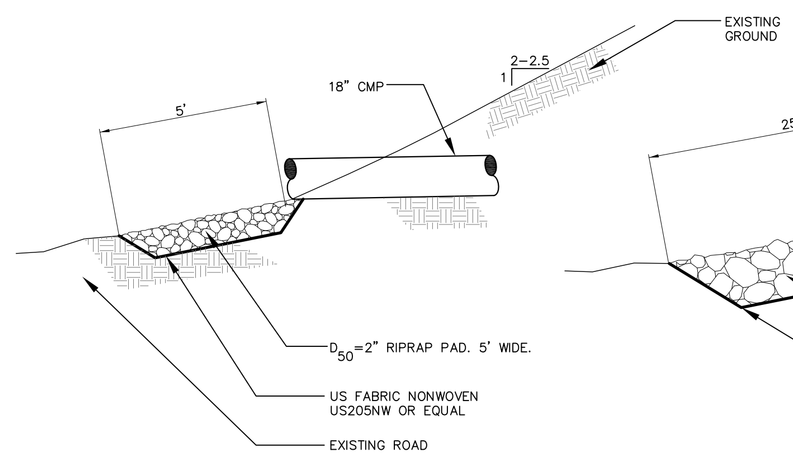

ASCA CULVERT OUTFALL (11/5)

NO SCALE

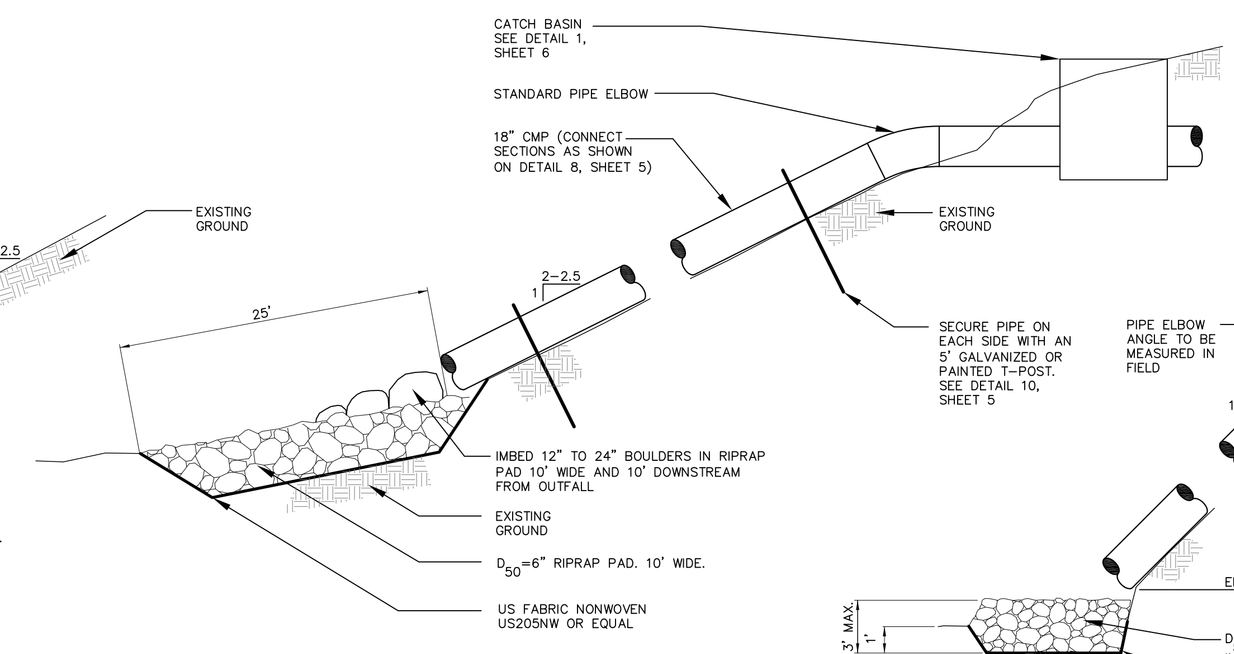

UPPER ROAD CULVERT DETAIL (12/5)

NO SCALE

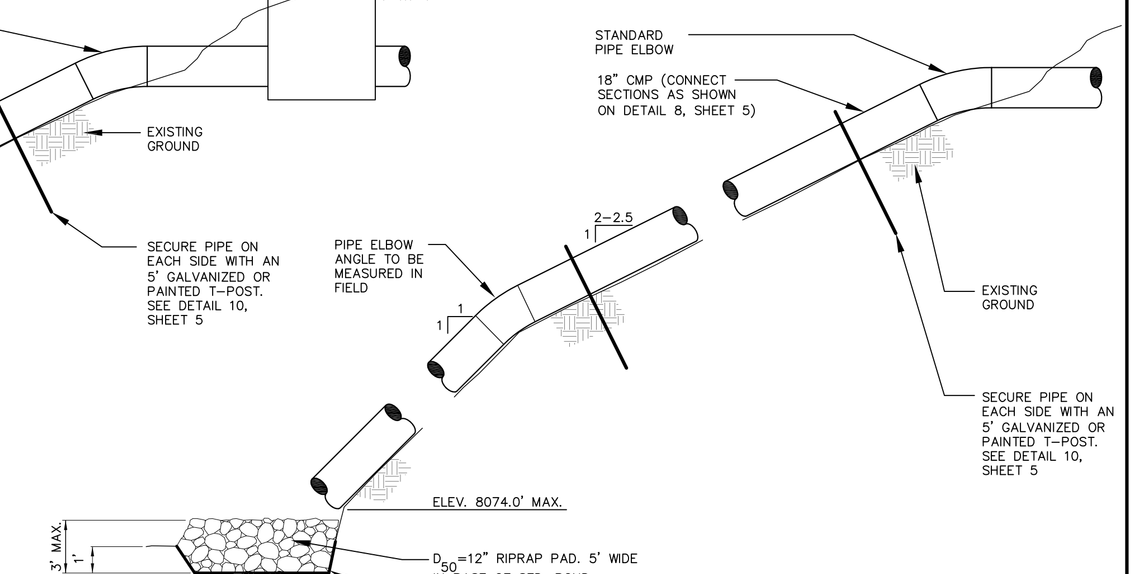

SEDIMENTATION POND INLET CULVERT DETAIL (13/5)

NO SCALE

EarthFax Engineering, Inc.
Engineers/Scientists

AS SHOWN

SEAL:

REGISTERED PROFESSIONAL ENGINEER
No. 168246
RICHARD B. WHITE
NOT VALID WITHOUT A SIGNATURE
STATE OF UTAH

DATE	No.	REVISIONS

WINTER QUARTERS VENTILATION SHAFT PAD
ROAD AND DRAINAGE DETAILS

Canyon Fuel Company, LLC
Skyline Mines

P.O. BOX 719 HELPER, UTAH 84526
801-637-7925

DATE: 06-01-10	CK.BY:rbw	REVISION:
CAD FILE: EF-6\UC794-18\3.2.4-3E	SCALE: AS SHOWN	DR.BY:swf	0
DWG. NO.: 3.2.4-3E	SHEET 5 OF 9	