0029 (2)

CONSULTANTS / ENGINEERS
VAUGHN HANSEN ASSOCIATES
WATERBURY PLAZA-SUITE A
5620 SOUTH 1475 EAST
SALT LAKE CITY, UTAH 84121
(801) 272-5263

May 8, 1986

RECEIVED
MAY 23 1986
DIVISION OF
OIL, GAS & MINING

Mr. Ben Grimes
Plateau Mining Company
P.O. Drawer PMC
Price, Utah 84501

RE: **HYDROLOGY AND HYDRAULICS OF RUNOFF CONTROL DITCHES REROUTED FOR NEW COAL SURPLUS PILES.**

Dear Ben:

This letter report summarizes the work requested of us for hydrologic and hydraulic design of ditches to be relocated as part of construction of conveyors and appurtenances for new coal surplus piles associated with the unit train load out facility. As part of this construction it is necessary to reroute two runoff control ditches which convey water from disturbed areas of the mine surface facilities to Sediment Pond Number 4. The proposed rerouting does not affect the overall hydrology of Sediment Pond Number 4 and the reader is referred to "Review of 'As Built' Runoff and Sedimentation Control Plan, Star Point Mines, Plateau Mining Company" (VHA, December 1983) for the hydrology and hydraulics of the runoff control ditches and sediment ponds which are not impacted by the proposed rerouting.

HYDROLOGY

The proposed new routes for the two runoff control ditches impacted by the construction of the coal surplus piles are shown on Plates 1 and 2 attached. For convenience the impacted runoff control ditches are designated as Ditch A and Ditch B. Proposed culverts on the two ditches are numbered from the head of the ditch. The subbasin tributary to each culvert on the rerouted ditches is indicated on Plate 1. The hydrologic characteristics of the subbasins are summarized in Table 1. The time of concentration for each subbasin was calculated using the following equations.

$$t_c = t_i + t_t$$

TABLE 1

HYDROLOGIC CHARACTERISTICS AT CULVERTS ON REROUTED DITCHES

Culvert	Trib. Area (acres)	Weighted CN	t_i (min)	t_t (min)	t_c (min)	10 yr-24 hr. Peak Flow (cfs)
A-1	1.9	90	9.2	1.8	11	2.2
A-2	5.5	90	8.7	11.4	20	5.7
A-3	17.6	83	8.7	11.8	20.5	11.5
A-4	19.1	83.6	8.7	12.2	20.9	13.0
A-5	19.4	84	8.7	12.6	21.3	13.5
A-6	22.8	85	8.7	13.9	22.6	16.6
B-1	0.4	90	9.7	0.3	10.0	0.4
B-2	0.8	90	9.7	1.1	10.8	0.9
B-3	0.9	90	9.7	2.1	11.8	1.0
B-4	5.0	90	12.3	2.1	14.4	5.6
B-5	5.4	90	12.3	2.7	15	6.0

In which t_c = time of concentration (minutes)
t_t = travel time in the ditch, channel, etc.
t_i = overland flow time (minutes)

$$t_i = \frac{1.8\ (1.1 - C_5)L^{.5}}{S^{.33}}$$

in which C_5 = runoff coefficient for 5-year frequency
C_5 = 0.25 used in calculations
L = length of overland flow, (feet)
S = average basin slope (percent)

The two rerouted runoff control ditches and culverts were designed for the 10 year 24 hour rain event using the SCS Curve Number - Unit Hydrograph methodology. Consistent with the work previously done,a curve number of 90 was used for all disturbed areas and a curve number of 70 for undisturbed areas. The area weighted curve number for each subbasin was found by planimetering the disturbed and undisturbed areas of each subbasin and calculating an area weighted curve number to represent the subbasin. The estimated peak 10 year 24 hour runoff flows are given in Table 1. The details of the runoff computations are given in appendix A.

HYDRAULICS

The Mannings uniform flow equation was used to find velocities and flow depths for the relocated ditches. An earth lined ditch with a triangular cross section and three horizontal to one vertical side slopes is proposed for the ditches. A Mannings N of .03 was used for the ditches assuming that the ditches will be left in a fairly rough state after construction and that because of the ephemeral nature of the runoff, weeds and grasses will likely establish in the channel with time. The mean velocities and flow depths are given in Table 2. The highest velocity (4.8 fps) is less than the 5 fps allowable on earth lined channels. Some erosion of the earth lined channels is expected, but maintenance will be relatively simple and all flows through these ditches go through Sediment Pond Number 4 where eroded sediments will be deposited.

The recommended culvert sizes, design headwater depths and recommended culvert slopes are given in Table 3. Erosion protection will be required at the end of downspouts A2, A7, and B5. A grouted riprap lining is proposed between downspout A2 and culvert A3 for erosion protection (see Figure 1 for configuration). Downspouts A7 and B5 end in Sediment Pond Number

TABLE 2

HYDRAULICS OF RELOCATED RUNOFF CONTROL DITCHES

Reach	Design Flow (cfs)	Given Slope (ft/ft)	Flow Depth (ft)	Mean Velocity (fps)	Freeboard (ft)	Total Channel Depth (ft)
Ditch above Culvert A-1	2.2	.029	0.48	3.2	1	1.5
Ditch above Culvert A-4	13	.02	1.0	4.3	1	2.0
Ditch above Culvert A-5	13.5	.027	1.0	4.8	1	2.0
Ditch above Culvert A-6	16.7	.02	1.1	4.6	1.4	2.5
Ditch above Culvert B-1	0.4	0.10	0.2	3.3	0.8	1.0
Ditch above Culvert B-2	0.9	0.10	0.27	4.0	0.7	1.0
Ditch above Culvert B-3	1.0	.075	0.3	3.7	0.7	1.0
Ditch to Catch Basin	1.0	.05	0.32	3.2	0.7	1.0

TABLE 3

RECOMMENDED CULVERT SIZE AND PARAMETERS

Culvert	Q (cfs)	Size (inches)	Length (ft)	Design Head Water Depth (ft)	Slope %
A-1	2.2	18	22	1.7	3
A-2	5.7	18	95	2.2	60
A-3	11.5	24	40	2	2
A-4	13	24	40	2.2	2
A-5	13.5	24	45	2.3	2
A-6	16.6	24	60	2.8	14.8
A-7	16.6	24	400	2.8	25
B-1	0.4	18	75	0.5	10
B-2	0.9	18	35	0.6	10
B-3	1.0	18	40	0.8	5
B-4	5.6	18	65	1.5	3
B-5	6.0	18	400	1.6	29

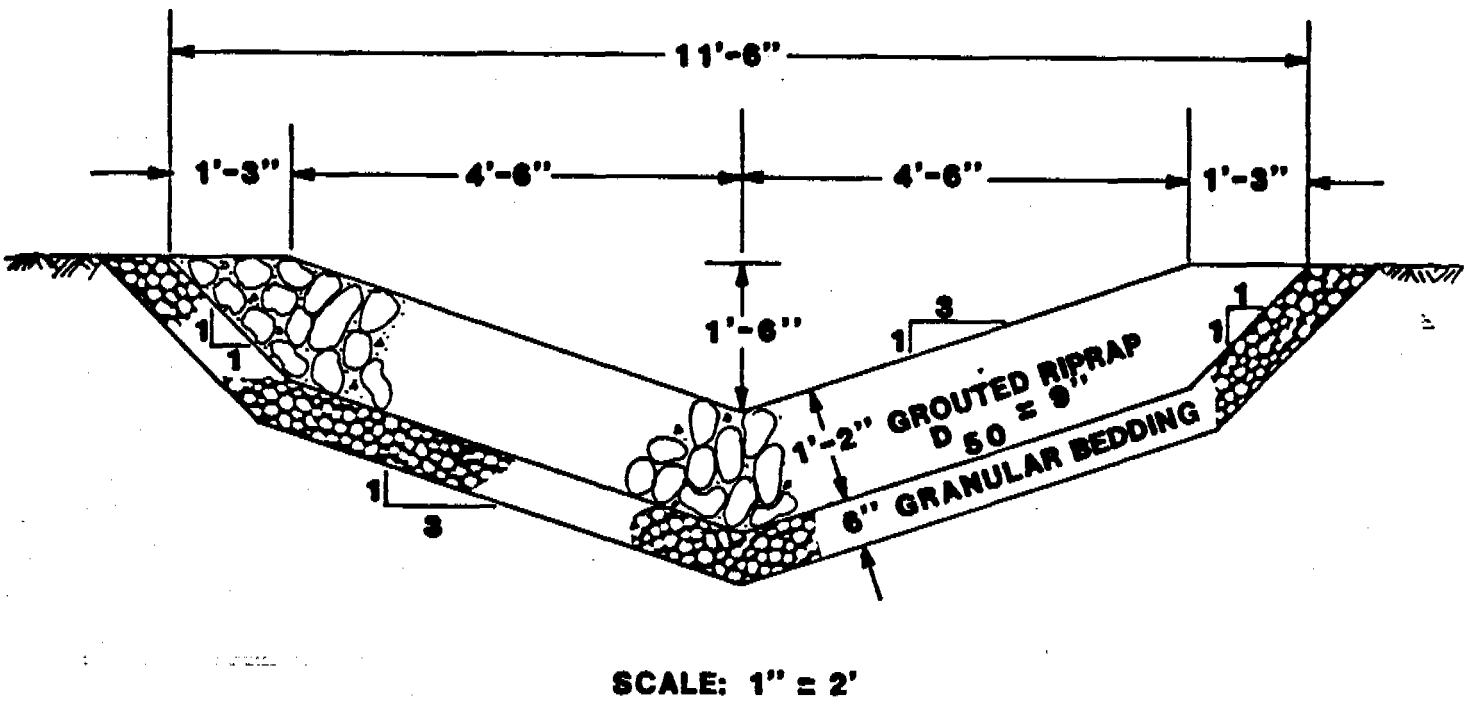

Figure 1. Cross section of grouted riprap channel proposed for between downspout A2 and culvert A3.

4 and during peak flows will likely have submerged outlets so erosion concerns are limited to prevention of local scour undermining the culvert outlets. Your proposal to use the existing large riprap with additional smaller pieces as needed should be sufficient. The expected duration of runoff conveyed through these ditch systems is very short and there should be ample opportunity for repairs as needed.

The proposed configuration of the new drop box at the head of downspout A2 is presented on Figure 2. As requested the figure presents the results of hydraulic design only and does not specify thicknesses and strengths of reinforced concrete members and grates. The proposed grate should have a minimum open area of two square feet to provide for inleting surface flows. To provide for the event of either of the upstream culverts plugging, the inlet should be placed in a sump condition with a foot of ponding height available from the top of the grate to the surrounding surface high point.

It has been a pleasure to work with you in this matter. If there are questions or we may be of further assistance, please call.

Sincerely,

Gregory J. Poole, P.E.

GJP/jd

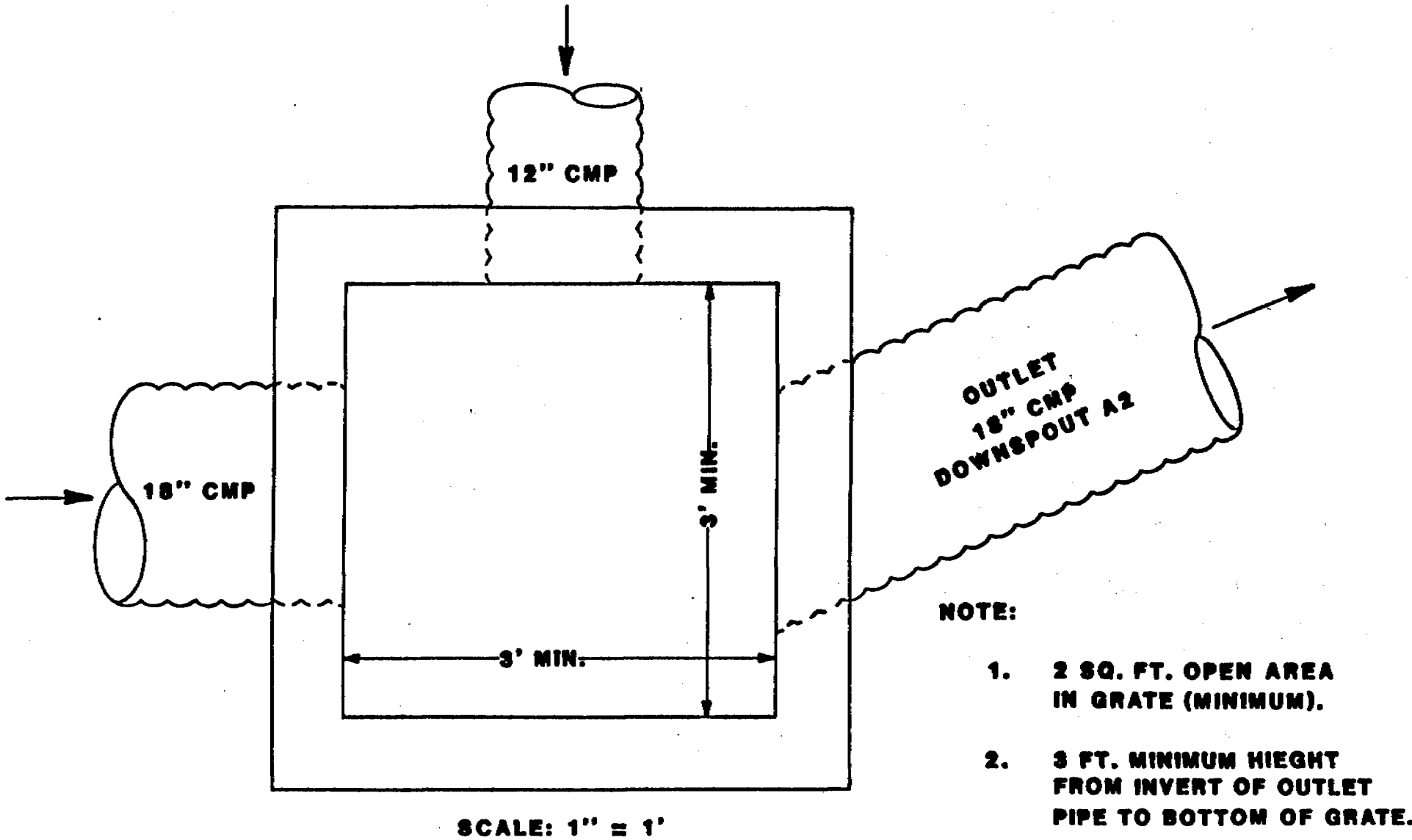

Figure 2. Configuration of New Drop Box

APPENDIX A

PROJECT : PLATEAU A1 10 YR 24 HR

AREA= 1.9 ACRES
AVERAGE BASIN SLOPE= ~~[illegible]~~ PERCENT Not used, T_c calculated as stated in text
CURVE NUMBER= 90.
DESIGN STORM= 2.10 INCHES
STORM DURATION= 24.0 HOURS
HYDRAULIC LENGTH= 420. FEET
MINIMUM INFILTRATION RATE= .00 IN/HR

TP= .1200 HOURS QPCFS= 11.97 CFS QPIN= 6.2498 INCHES
C3= 30.8051 ITERATIONS= 8 SCS 24-hour

TIME HOURS	ACCUMULATED RAINFALL INCHES	RUNOFF INCHES	RAINFALL EXCESS INCHES	UNIT HYDROGRAPH CFS	OUTFLOW HYDROGRAPH CFS
7.25	.2215	.0000	.0000	.0	.00
7.27	.2226	.0000	.0000	.6	.00
7.30	.2237	.0000	.0000	3.7	.00
7.32	.2248	.0000	.0000	7.9	.00
7.34	.2259	.0000	.0000	11.0	.00
7.37	.2270	.0000	.0000	12.0	.00
7.39	.2281	.0000	.0000	11.2	.00
7.42	.2292	.0000	.0000	9.5	.00
7.44	.2303	.0001	.0000	7.4	.00
7.46	.2314	.0001	.0000	5.5	.00
7.49	.2325	.0001	.0000	3.9	.00
7.51	.2336	.0001	.0000	2.6	.00
7.54	.2345	.0001	.0000	1.7	.00
7.56	.2354	.0002	.0000	1.1	.00
7.58	.2363	.0002	.0000	.7	.00
7.61	.2372	.0002	.0000	.4	.00
7.63	.2381	.0002	.0000	.3	.00
7.66	.2390	.0002	.0000	.2	.00
7.68	.2399	.0003	.0000	.1	.00
11.88	1.2009	.4583	.0273	.0	1.95
11.90	1.2392	.4860	.0277	.0	2.00
11.93	1.2775	.5140	.0280	.0	2.04
11.95	1.3158	.5424	.0284	.0	2.08
11.98	1.3541	.5712	.0287	.0	2.12
12.00	1.3923	.6002	.0290	.0	2.15
12.02	1.3996	.6057	.0055	.0	2.17
12.05	1.4068	.6113	.0056	.0	2.12
12.07	1.4141	.6168	.0056	.0	1.95
12.10	1.4213	.6224	.0056	.0	1.72
12.12	1.4286	.6280	.0056	.0	1.45
12.14	1.4359	.6336	.0056	.0	1.20
12.17	1.4431	.6392	.0056	.0	.99

HYDROGRAPH PEAK= 2.17 cfs
TIME TO PEAK= 12.02 Hours
RUNOFF VOLUME= .19 Acre-Feet

PROJECT : PLATEAU A2 10 YR 24 HR

AREA= 5.5 ACRES
AVERAGE BASIN SLOPE= ~~10.0~~ PERCENT *not used, Tc calculated as stated in text*
CURVE NUMBER= 90.
DESIGN STORM= 2.10 INCHES
STORM DURATION= 24.0 HOURS
HYDRAULIC LENGTH= 2050. FEET
MINIMUM INFILTRATION RATE= .00 IN/HR

TP= .2200 HOURS QPCFS= 18.91 CFS QPIN= 3.4090 INCHES
C3= 16.8028 ITERATIONS= 8 SCS 24-hour

TIME HOURS	ACCUMULATED RAINFALL INCHES	RUNOFF INCHES	RAINFALL EXCESS INCHES	UNIT HYDROGRAPH CFS	OUTFLOW HYDROGRAPH CFS
7.26	.2220	.0000	.0000	.0	.00
7.30	.2240	.0000	.0000	.9	.00
7.35	.2261	.0000	.0000	5.9	.00
7.39	.2281	.0000	.0000	12.6	.00
7.44	.2301	.0001	.0000	17.4	.00
7.48	.2322	.0001	.0000	18.9	.00
7.52	.2340	.0001	.0000	17.7	.00
7.57	.2357	.0002	.0000	14.9	.00
7.61	.2373	.0002	.0000	11.7	.00
7.66	.2390	.0002	.0000	8.6	.00
7.70	.2407	.0003	.0001	6.1	.00
7.74	.2423	.0004	.0001	4.1	.00
7.79	.2440	.0004	.0001	2.7	.00
7.83	.2456	.0005	.0001	1.7	.01
7.88	.2473	.0006	.0001	1.1	.01
7.92	.2490	.0006	.0001	.7	.01
7.96	.2506	.0007	.0001	.4	.01
8.01	.2524	.0008	.0001	.2	.01
8.05	.2546	.0009	.0001	.1	.01
8.10	.2568	.0010	.0001	.1	.01
11.79	1.0603	.3603	.0466	.0	3.33
11.84	1.1305	.4085	.0482	.0	3.92
11.88	1.2007	.4582	.0497	.0	4.43
11.92	1.2710	.5092	.0510	.0	4.87
11.97	1.3412	.5615	.0522	.0	5.24
12.01	1.3959	.6029	.0415	.0	5.55
12.06	1.4092	.6131	.0102	.0	5.72
12.10	1.4225	.6233	.0102	.0	5.61
12.14	1.4358	.6336	.0102	.0	5.20
12.19	1.4491	.6438	.0103	.0	4.57
12.23	1.4625	.6542	.0103	.0	3.88
12.28	1.4758	.6645	.0104	.0	3.23
12.32	1.4891	.6749	.0104	.0	2.68

HYDROGRAPH PEAK= 5.72 cfs
TIME TO PEAK= 12.06 Hours
RUNOFF VOLUME= .54 Acre-Feet

PROJECT : PLATEAU A3 10 YR 24 HR

AREA= 17.6 ACRES
AVERAGE BASIN SLOPE= ~~10.0~~ PERCENT not used, Tc calculated as stated in text.
CURVE NUMBER= 83.
DESIGN STORM= 2.10 INCHES
STORM DURATION= 24.0 HOURS
HYDRAULIC LENGTH= 2200. FEET
MINIMUM INFILTRATION RATE= .00 IN/HR

TP= .2267 HOURS QPCFS= 58.72 CFS QPIN= 3.3087 INCHES
C3= 16.3086 ITERATIONS= 8 SCS 24-hour

TIME HOURS	ACCUMULATED RAINFALL INCHES	RUNOFF INCHES	RAINFALL EXCESS INCHES	UNIT HYDROGRAPH CFS	OUTFLOW HYDROGRAPH CFS
10.29	.4082	.0000	.0000	.0	.00
10.34	.4126	.0000	.0000	2.9	.00
10.38	.4169	.0000	.0000	18.2	.00
10.43	.4213	.0001	.0000	39.0	.00
10.47	.4257	.0001	.0001	53.9	.00
10.52	.4307	.0002	.0001	58.7	.00
10.56	.4368	.0004	.0001	55.0	.01
10.61	.4429	.0005	.0002	46.4	.01
10.65	.4490	.0007	.0002	36.3	.02
10.70	.4551	.0010	.0002	26.8	.03
10.74	.4612	.0013	.0003	18.9	.04
10.79	.4673	.0016	.0003	12.8	.05
10.83	.4734	.0019	.0003	8.4	.07
10.88	.4795	.0023	.0004	5.4	.08
10.93	.4856	.0027	.0004	3.4	.09
10.97	.4917	.0032	.0004	2.1	.10
11.02	.4988	.0037	.0006	1.3	.12
11.06	.5077	.0045	.0008	.8	.13
11.11	.5167	.0053	.0008	.4	.15
11.15	.5256	.0062	.0009	.3	.18
11.20	.5345	.0072	.0010	.2	.21
11.24	.5435	.0082	.0010	.1	.24
11.83	1.1241	.1848	.0315	.0	6.17
11.88	1.1965	.2184	.0336	.0	7.41
11.92	1.2688	.2539	.0355	.0	8.59
11.97	1.3412	.2912	.0373	.0	9.70
12.01	1.3963	.3208	.0296	.0	10.70
12.06	1.4100	.3283	.0075	.0	11.41
12.10	1.4237	.3358	.0075	.0	11.48
12.15	1.4374	.3434	.0076	.0	10.84
12.19	1.4512	.3511	.0077	.0	9.68
12.24	1.4649	.3588	.0077	.0	8.32
12.29	1.4786	.3666	.0078	.0	7.00
12.33	1.4923	.3744	.0078	.0	5.88

PROJECT : PLATEAU A3[illegible]0 YR 24 HR
(Continued)

TIME HOURS	ACCUMULATED RAINFALL INCHES	RUNOFF INCHES	RAINFALL EXCESS INCHES	UNIT HYDROGRAPH CFS	OUTFLOW HYDROGRAPH CFS
12.38	1.5060	.3822	.0079	.0	5.00

HYDROGRAPH PEAK= 11.48 cfs
TIME TO PEAK= 12.10 Hours
RUNOFF VOLUME= 1.12 Acre-Feet

PROJECT : PLATEAU A4 10 YR 24 HR

AREA= 19.1 ACRES
AVERAGE BASIN SLOPE= ~~10.2~~ PERCENT NOT USED
CURVE NUMBER= 84.
DESIGN STORM= 2.10 INCHES
STORM DURATION= 24.0 HOURS
HYDRAULIC LENGTH= 2400. FEET
MINIMUM INFILTRATION RATE= .00 IN/HR

TP= .2333 HOURS QPCFS= 61.90 CFS QPIN= 3.2142 INCHES
C3= 15.8426 ITERATIONS= 8 SCS 24-hour

TIME HOURS	ACCUMULATED RAINFALL INCHES	RUNOFF INCHES	RAINFALL EXCESS INCHES	UNIT HYDROGRAPH CFS	OUTFLOW HYDROGRAPH CFS
10.13	.3923	.0000	.0000	.0	.00
10.17	.3968	.0000	.0000	3.1	.00
10.22	.4014	.0000	.0000	19.2	.00
10.27	.4059	.0001	.0001	41.1	.00
10.31	.4104	.0002	.0001	56.8	.00
10.36	.4149	.0003	.0001	61.9	.01
10.41	.4194	.0004	.0001	58.0	.01
10.45	.4239	.0005	.0001	48.9	.02
10.50	.4284	.0007	.0002	38.3	.02
10.55	.4347	.0009	.0002	28.3	.03
10.59	.4409	.0012	.0003	19.9	.04
10.64	.4472	.0015	.0003	13.5	.05
10.69	.4535	.0018	.0004	8.9	.06
10.73	.4598	.0022	.0004	5.7	.08
10.78	.4660	.0027	.0004	3.6	.09
10.83	.4723	.0031	.0005	2.2	.11
10.87	.4786	.0036	.0005	1.3	.12
10.92	.4849	.0042	.0005	.8	.14
10.97	.4911	.0047	.0006	.5	.15
11.01	.4982	.0054	.0007	.3	.17
11.06	.5074	.0064	.0010	.2	.19
11.11	.5167	.0074	.0010	.1	.21
11.81	1.0838	.1802	.0326	.0	6.13
11.85	1.1583	.2151	.0349	.0	7.59
11.90	1.2327	.2521	.0370	.0	8.98
11.95	1.3072	.2910	.0389	.0	10.30
11.99	1.3817	.3317	.0407	.0	11.51
12.04	1.4044	.3444	.0127	.0	12.54
12.09	1.4185	.3524	.0080	.0	12.98
12.13	1.4326	.3605	.0081	.0	12.58
12.18	1.4467	.3686	.0081	.0	11.47
12.23	1.4609	.3768	.0082	.0	9.99
12.27	1.4750	.3850	.0082	.0	8.46
12.32	1.4891	.3933	.0083	.0	7.10

PROJECT : PLATEAU A4[illegible]0 YR 24 HR
(Continued)

TIME HOURS	ACCUMULATED RAINFALL INCHES	RUNOFF INCHES	RAINFALL EXCESS INCHES	UNIT HYDROGRAPH CFS	OUTFLOW HYDROGRAPH CFS
12.37	1.5032	.4016	.0083	.0	5.99

HYDROGRAPH PEAK= 12.98 cfs
TIME TO PEAK= 12.09 Hours
RUNOFF VOLUME= 1.26 Acre-Feet

PROJECT : PLATEAU A5 10 YR 24 HR

AREA= 19.4 ACRES
AVERAGE BASIN SLOPE= ~~10.0~~ PERCENT NOT USED
CURVE NUMBER= 84.
DESIGN STORM= 2.10 INCHES
STORM DURATION= 24.0 HOURS
HYDRAULIC LENGTH= 2680. FEET
MINIMUM INFILTRATION RATE= .00 IN/HR

TP= .2400 HOURS QPCFS= 61.13 CFS QPIN= 3.1249 INCHES
C3= 15.4026 ITERATIONS= 8 SCS 24-hour

TIME HOURS	ACCUMULATED RAINFALL INCHES	RUNOFF INCHES	RAINFALL EXCESS INCHES	UNIT HYDROGRAPH CFS	OUTFLOW HYDROGRAPH CFS
9.98	.3789	.0000	.0000	.0	.00
10.03	.3832	.0000	.0000	3.1	.00
10.08	.3878	.0000	.0000	19.0	.00
10.13	.3925	.0001	.0000	40.6	.00
10.18	.3971	.0001	.0001	56.1	.00
10.22	.4017	.0002	.0001	61.1	.00
10.27	.4064	.0003	.0001	57.3	.01
10.32	.4110	.0005	.0001	48.3	.01
10.37	.4156	.0006	.0002	37.8	.02
10.42	.4203	.0008	.0002	27.9	.03
10.46	.4249	.0010	.0002	19.7	.03
10.51	.4300	.0012	.0002	13.4	.04
10.56	.4365	.0016	.0003	8.8	.05
10.61	.4429	.0020	.0004	5.6	.06
10.66	.4494	.0024	.0004	3.5	.08
10.70	.4558	.0028	.0005	2.2	.09
10.75	.4623	.0033	.0005	1.3	.11
10.80	.4687	.0039	.0005	.8	.13
10.85	.4752	.0044	.0006	.5	.14
10.90	.4816	.0051	.0006	.3	.16
10.94	.4881	.0057	.0007	.2	.18
10.99	.4945	.0064	.0007	.1	.20
11.81	1.0859	.1904	.0346	.0	6.34
11.86	1.1625	.2274	.0370	.0	7.88
11.90	1.2391	.2665	.0392	.0	9.36
11.95	1.3157	.3077	.0412	.0	10.75
12.00	1.3923	.3508	.0430	.0	12.03
12.05	1.4068	.3591	.0084	.0	13.09
12.10	1.4213	.3675	.0084	.0	13.47
12.14	1.4359	.3760	.0085	.0	12.94
12.19	1.4504	.3845	.0085	.0	11.70
12.24	1.4649	.3931	.0086	.0	10.12
12.29	1.4794	.4018	.0086	.0	8.54
12.34	1.4939	.4105	.0087	.0	7.15

PROJECT : PLATEAU A5[illegible]0 YR 24 HR
(Continued)

TIME HOURS	ACCUMULATED RAINFALL INCHES	RUNOFF INCHES	RAINFALL EXCESS INCHES	UNIT HYDROGRAPH CFS	OUTFLOW HYDROGRAPH CFS
12.38	1.5084	.4192	.0088	.0	6.05

HYDROGRAPH PEAK= 13.47 cfs
TIME TO PEAK= 12.10 Hours
RUNOFF VOLUME= 1.32 Acre-Feet

PROJECT : PLATEAU DITCH JUST BELOW CULVERT A5

AREA= 22.4 ACRES
AVERAGE BASIN SLOPE= ~~10.0~~ PERCENT Not used
CURVE NUMBER= 85.
DESIGN STORM= 2.10 INCHES
STORM DURATION= 24.0 HOURS
HYDRAULIC LENGTH= 2880. FEET
MINIMUM INFILTRATION RATE= .00 IN/HR

TP= .2400 HOURS QPCFS= 70.58 CFS QPIN= 3.1249 INCHES
C3= 15.4026 ITERATIONS= 8 SCS 24-hour

TIME HOURS	ACCUMULATED RAINFALL INCHES	RUNOFF INCHES	RAINFALL EXCESS INCHES	UNIT HYDROGRAPH CFS	OUTFLOW HYDROGRAPH CFS
9.60	.3499	.0000	.0000	.0	.00
9.65	.3535	.0000	.0000	3.5	.00
9.70	.3571	.0000	.0000	21.9	.00
9.74	.3607	.0000	.0000	46.9	.00
9.79	.3644	.0001	.0000	64.8	.00
9.84	.3680	.0001	.0001	70.6	.00
9.89	.3716	.0002	.0001	66.1	.01
9.94	.3753	.0003	.0001	55.8	.01
9.98	.3789	.0004	.0001	43.7	.01
10.03	.3832	.0005	.0001	32.2	.02
10.08	.3878	.0007	.0002	22.7	.03
10.13	.3925	.0009	.0002	15.4	.03
10.18	.3971	.0011	.0002	10.2	.04
10.22	.4017	.0013	.0002	6.5	.05
10.27	.4064	.0016	.0003	4.1	.06
10.32	.4110	.0019	.0003	2.5	.07
10.37	.4156	.0022	.0003	1.5	.08
10.42	.4203	.0025	.0003	.9	.10
10.46	.4249	.0028	.0003	.5	.11
10.51	.4300	.0032	.0004	.3	.12
10.56	.4365	.0038	.0005	.2	.13
10.61	.4429	.0044	.0006	.1	.14
10.66	.4494	.0050	.0006	.1	.16
11.81	1.0859	.2151	.0372	.0	8.17
11.86	1.1625	.2546	.0395	.0	10.07
11.90	1.2391	.2962	.0416	.0	11.87
11.95	1.3157	.3399	.0436	.0	13.53
12.00	1.3923	.3853	.0454	.0	15.04
12.05	1.4068	.3940	.0088	.0	16.27
12.10	1.4213	.4029	.0089	.0	16.66
12.14	1.4359	.4118	.0089	.0	15.96
12.19	1.4504	.4208	.0090	.0	14.39
12.24	1.4649	.4298	.0090	.0	12.43
12.29	1.4794	.4389	.0091	.0	10.46

PROJECT : PLATEAU DITCH JUST BELOW CULVERT A5
(Continued)

TIME HOURS	ACCUMULATED RAINFALL INCHES	RUNOFF INCHES	RAINFALL EXCESS INCHES	UNIT HYDROGRAPH CFS	OUTFLOW HYDROGRAPH CFS
12.34	1.4939	.4480	.0091	.0	8.75
12.38	1.5084	.4572	.0092	.0	7.38

HYDROGRAPH PEAK= 16.66 cfs
TIME TO PEAK= 12.10 Hours
RUNOFF VOLUME= 1.62 Acre-Feet

PROJECT : PLATEAU A6 10 YR 24 HR

AREA= 22.8 ACRES
AVERAGE BASIN SLOPE= ~~10.0~~ PERCENT NOT USED
CURVE NUMBER= 85.
DESIGN STORM= 2.10 INCHES
STORM DURATION= 24.0 HOURS
HYDRAULIC LENGTH= 3340. FEET
MINIMUM INFILTRATION RATE= .00 IN/HR

TP= .2533 HOURS QPCFS= 68.06 CFS QPIN= 2.9604 INCHES
C3= 14.5919 ITERATIONS= 8 SCS 24-hour

TIME HOURS	ACCUMULATED RAINFALL INCHES	RUNOFF INCHES	RAINFALL EXCESS INCHES	UNIT HYDROGRAPH CFS	OUTFLOW HYDROGRAPH CFS
9.63	.3519	.0000	.0000	.0	.00
9.68	.3557	.0000	.0000	3.4	.00
9.73	.3595	.0000	.0000	21.1	.00
9.78	.3634	.0001	.0000	45.2	.00
9.83	.3672	.0001	.0001	62.5	.00
9.88	.3710	.0002	.0001	68.1	.00
9.93	.3749	.0003	.0001	63.8	.01
9.98	.3787	.0004	.0001	53.8	.01
10.03	.3832	.0005	.0001	42.1	.02
10.08	.3881	.0007	.0002	31.1	.02
10.13	.3930	.0009	.0002	21.9	.03
10.18	.3979	.0011	.0002	14.9	.04
10.23	.4028	.0014	.0003	9.8	.05
10.29	.4077	.0016	.0003	6.3	.06
10.34	.4126	.0019	.0003	3.9	.07
10.39	.4175	.0023	.0003	2.4	.09
10.44	.4223	.0026	.0004	1.5	.10
10.49	.4272	.0030	.0004	.9	.11
10.54	.4336	.0035	.0005	.5	.12
10.59	.4404	.0041	.0006	.3	.14
10.64	.4472	.0048	.0007	.2	.15
10.69	.4540	.0055	.0007	.1	.18
11.81	1.0816	.2130	.0390	.0	7.68
11.86	1.1625	.2546	.0416	.0	9.68
11.91	1.2434	.2986	.0440	.0	11.60
11.96	1.3242	.3448	.0462	.0	13.39
12.01	1.3947	.3867	.0419	.0	15.00
12.06	1.4100	.3960	.0093	.0	16.24
12.11	1.4254	.4054	.0094	.0	16.56
12.16	1.4407	.4148	.0094	.0	15.78
12.21	1.4560	.4243	.0095	.0	14.19
12.26	1.4713	.4338	.0096	.0	12.24
12.31	1.4867	.4435	.0096	.0	10.31
12.36	1.5020	.4531	.0097	.0	8.65

3.5

PROJECT : PLATEAU A6 10 YR 6 HR CHECK

AREA= 22.8 ACRES
AVERAGE BASIN SLOPE= 10.0 PERCENT
CURVE NUMBER= 85.
DESIGN STORM= 1.40 INCHES
STORM DURATION= 6.0 HOURS
HYDRAULIC LENGTH= 0. FEET
MINIMUM INFILTRATION RATE= .00 IN/HR

TP= .2533 HOURS QPCFS= 68.06 CFS QPIN= 2.9604 INCHES
C3= 14.5919 ITERATIONS= 8 SCS 6-hour

TIME HOURS	ACCUMULATED RAINFALL INCHES	RUNOFF INCHES	RAINFALL EXCESS INCHES	UNIT HYDROGRAPH CFS	OUTFLOW HYDROGRAPH CFS
2.03	.3496	.0000	.0000	.0	.00
2.08	.4021	.0013	.0013	3.4	.00
2.13	.4546	.0055	.0042	21.1	.04
2.18	.5071	.0124	.0068	45.2	.17
2.23	.5596	.0217	.0093	62.5	.45
2.28	.6121	.0332	.0115	68.1	.90
2.33	.6646	.0468	.0136	63.8	1.51
2.38	.7171	.0623	.0155	53.8	2.25
2.43	.7696	.0796	.0173	42.1	3.07
2.48	.8220	.0985	.0189	31.1	3.94
2.53	.8493	.1090	.0105	21.9	4.79
2.58	.8635	.1146	.0056	14.9	5.43
2.63	.8777	.1203	.0057	9.8	5.69
2.69	.8919	.1261	.0058	6.3	5.56
2.74	.9061	.1320	.0059	3.9	5.16
2.79	.9203	.1380	.0060	2.4	4.66
2.84	.9345	.1441	.0061	1.5	4.17
2.89	.9486	.1503	.0062	.9	3.76
2.94	.9628	.1566	.0063	.5	3.44
2.99	.9770	.1630	.0064	.3	3.21
3.04	.9890	.1685	.0055	.2	3.06
3.09	1.0003	.1737	.0052	.1	2.96

HYDROGRAPH PEAK= 5.69 cfs
TIME TO PEAK= 2.63 Hours
RUNOFF VOLUME= .74 Acre-Feet

→ 6hr/24hr 10yr = 0.34

5.7
16.6

PROJECT : PLATEAU A6 10 YR 24 HR
(continued)

TIME HOURS	ACCUMULATED RAINFALL INCHES	RUNOFF INCHES	RAINFALL EXCESS INCHES	UNIT HYDROGRAPH CFS	OUTFLOW HYDROGRAPH CFS
12.41	1.5173	.4629	.0097	.0	7.33

HYDROGRAPH PEAK= 16.56 cfs
TIME TO PEAK= 12.11 Hours
RUNOFF VOLUME= 1.65 Acre-Feet

PROJECT : PLATEAU B1 10 YR 24 HR

AREA= .4 ACRES
AVERAGE BASIN SLOPE= ~~1.0~~ PERCENT NOT USED
CURVE NUMBER= 90.
DESIGN STORM= 2.10 INCHES
STORM DURATION= 24.0 HOURS
HYDRAULIC LENGTH= 260. FEET
MINIMUM INFILTRATION RATE= .00 IN/HR

TP= .1133 HOURS QPCFS= 2.67 CFS QPIN= 6.6174 INCHES
C3= 32.6172 ITERATIONS= 8 SCS 24-hour

TIME HOURS	ACCUMULATED RAINFALL INCHES	RUNOFF INCHES	RAINFALL EXCESS INCHES	UNIT HYDROGRAPH CFS	OUTFLOW HYDROGRAPH CFS
7.25	.2217	.0000	.0000	.0	.00
7.28	.2227	.0000	.0000	.1	.00
7.30	.2238	.0000	.0000	.8	.00
7.32	.2248	.0000	.0000	1.8	.00
7.34	.2259	.0000	.0000	2.5	.00
7.37	.2269	.0000	.0000	2.7	.00
7.39	.2280	.0000	.0000	2.5	.00
7.41	.2290	.0000	.0000	2.1	.00
7.43	.2301	.0001	.0000	1.7	.00
7.46	.2311	.0001	.0000	1.2	.00
7.48	.2322	.0001	.0000	.9	.00
7.50	.2332	.0001	.0000	.6	.00
7.53	.2341	.0001	.0000	.4	.00
7.55	.2349	.0001	.0000	.2	.00
7.57	.2358	.0002	.0000	.2	.00
7.59	.2366	.0002	.0000	.1	.00
11.88	1.1965	.4552	.0257	.0	.41
11.90	1.2327	.4813	.0261	.0	.42
11.92	1.2689	.5077	.0264	.0	.43
11.95	1.3051	.5345	.0267	.0	.44
11.97	1.3412	.5615	.0270	.0	.44
11.99	1.3774	.5888	.0273	.0	.45
12.01	1.3963	.6032	.0144	.0	.46
12.04	1.4032	.6085	.0052	.0	.45
12.06	1.4100	.6137	.0052	.0	.42
12.08	1.4169	.6190	.0053	.0	.38
12.10	1.4238	.6243	.0053	.0	.33
12.13	1.4306	.6295	.0053	.0	.27
12.15	1.4375	.6348	.0053	.0	.22

HYDROGRAPH PEAK= .46 cfs
TIME TO PEAK= 12.01 Hours
RUNOFF VOLUME= .04 Acre-Feet

PROJECT : PLATEAU B[illegible]10 YR 24 HR

AREA= .8 ACRES
AVERAGE BASIN SLOPE= ~~[illegible]~~ PERCENT Not used
CURVE NUMBER= 90.
DESIGN STORM= 2.10 INCHES
STORM DURATION= 24.0 HOURS
HYDRAULIC LENGTH= 460. FEET
MINIMUM INFILTRATION RATE= .00 IN/HR

TP= .1200 HOURS QPCFS= 5.04 CFS QPIN= 6.2498 INCHES
C3= 30.8051 ITERATIONS= 8 SCS 24-hour

TIME HOURS	ACCUMULATED RAINFALL INCHES	RUNOFF INCHES	RAINFALL EXCESS INCHES	UNIT HYDROGRAPH CFS	OUTFLOW HYDROGRAPH CFS
7.25	.2215	.0000	.0000	.0	.00
7.27	.2226	.0000	.0000	.3	.00
7.30	.2237	.0000	.0000	1.6	.00
7.32	.2248	.0000	.0000	3.3	.00
7.34	.2259	.0000	.0000	4.6	.00
7.37	.2270	.0000	.0000	5.0	.00
7.39	.2281	.0000	.0000	4.7	.00
7.42	.2292	.0000	.0000	4.0	.00
7.44	.2303	.0001	.0000	3.1	.00
7.46	.2314	.0001	.0000	2.3	.00
7.49	.2325	.0001	.0000	1.6	.00
7.51	.2336	.0001	.0000	1.1	.00
7.54	.2345	.0001	.0000	.7	.00
7.56	.2354	.0002	.0000	.5	.00
7.58	.2363	.0002	.0000	.3	.00
7.61	.2372	.0002	.0000	.2	.00
7.63	.2381	.0002	.0000	.1	.00
7.66	.2390	.0002	.0000	.1	.00
11.88	1.2009	.4583	.0273	.0	.82
11.90	1.2392	.4860	.0277	.0	.84
11.93	1.2775	.5140	.0280	.0	.86
11.95	1.3158	.5424	.0284	.0	.88
11.98	1.3541	.5712	.0287	.0	.89
12.00	1.3923	.6002	.0290	.0	.91
12.02	1.3996	.6057	.0055	.0	.91
12.05	1.4068	.6113	.0056	.0	.89
12.07	1.4141	.6168	.0056	.0	.82
12.10	1.4213	.6224	.0056	.0	.72
12.12	1.4286	.6280	.0056	.0	.61
12.14	1.4359	.6336	.0056	.0	.50
12.17	1.4431	.6392	.0056	.0	.41

HYDROGRAPH PEAK= .91 cfs
TIME TO PEAK= 12.02 Hours
RUNOFF VOLUME= .08 Acre-Feet

PROJECT : PLATEAU B3 10 YR 24 HR

AREA= .9 ACRES
AVERAGE BASIN SLOPE= ~~10.0~~ PERCENT NOT USED
CURVE NUMBER= 90.
DESIGN STORM= 2.10 INCHES
STORM DURATION= 24.0 HOURS
HYDRAULIC LENGTH= 750. FEET
MINIMUM INFILTRATION RATE= .00 IN/HR

TP= .1333 HOURS QPCFS= 5.10 CFS QPIN= 5.6248 INCHES
C3= 27.7246 ITERATIONS= 8 SCS 24-hour

TIME HOURS	ACCUMULATED RAINFALL INCHES	RUNOFF INCHES	RAINFALL EXCESS INCHES	UNIT HYDROGRAPH CFS	OUTFLOW HYDROGRAPH CFS
7.25	.2217	.0000	.0000	.0	.00
7.28	.2229	.0000	.0000	.3	.00
7.31	.2242	.0000	.0000	1.6	.00
7.33	.2254	.0000	.0000	3.4	.00
7.36	.2266	.0000	.0000	4.7	.00
7.39	.2279	.0000	.0000	5.1	.00
7.41	.2291	.0000	.0000	4.8	.00
7.44	.2303	.0001	.0000	4.0	.00
7.47	.2316	.0001	.0000	3.2	.00
7.49	.2328	.0001	.0000	2.3	.00
7.52	.2339	.0001	.0000	1.6	.00
7.55	.2349	.0001	.0000	1.1	.00
7.57	.2359	.0002	.0000	.7	.00
7.60	.2369	.0002	.0000	.5	.00
7.63	.2379	.0002	.0000	.3	.00
7.65	.2389	.0002	.0000	.2	.00
7.68	.2399	.0003	.0000	.1	.00
7.71	.2409	.0003	.0000	.1	.00
11.87	1.1795	.4430	.0300	.0	.89
11.89	1.2220	.4736	.0305	.0	.92
11.92	1.2646	.5046	.0310	.0	.95
11.95	1.3072	.5360	.0314	.0	.97
11.97	1.3497	.5679	.0319	.0	.99
12.00	1.3923	.6001	.0323	.0	1.01
12.03	1.4004	.6063	.0062	.0	1.02
12.05	1.4084	.6125	.0062	.0	.99
12.08	1.4165	.6187	.0062	.0	.92
12.11	1.4246	.6249	.0062	.0	.81
12.13	1.4326	.6311	.0062	.0	.68
12.16	1.4407	.6373	.0062	.0	.57
12.19	1.4487	.6435	.0062	.0	.47

HYDROGRAPH PEAK= 1.02 cfs
TIME TO PEAK= 12.03 Hours
RUNOFF VOLUME= .09 Acre-Feet

PROJECT : PLATEAU B4 10 YR 24 HR

AREA= 5.0 ACRES
AVERAGE BASIN SLOPE= ~~10.0~~ PERCENT NOT USED
CURVE NUMBER= 90.
DESIGN STORM= 2.10 INCHES
STORM DURATION= 24.0 HOURS
HYDRAULIC LENGTH= 680. FEET
MINIMUM INFILTRATION RATE= .00 IN/HR

TP= .1600 HOURS QPCFS= 23.63 CFS QPIN= 4.6873 INCHES
C3= 23.1039 ITERATIONS= 8 SCS 24-hour

TIME HOURS	ACCUMULATED RAINFALL INCHES	RUNOFF INCHES	RAINFALL EXCESS INCHES	UNIT HYDROGRAPH CFS	OUTFLOW HYDROGRAPH CFS
7.26	.2222	.0000	.0000	.0	.00
7.30	.2237	.0000	.0000	1.2	.00
7.33	.2252	.0000	.0000	7.3	.00
7.36	.2266	.0000	.0000	15.7	.00
7.39	.2281	.0000	.0000	21.7	.00
7.42	.2296	.0000	.0000	23.6	.00
7.46	.2311	.0001	.0000	22.1	.00
7.49	.2325	.0001	.0000	18.7	.00
7.52	.2339	.0001	.0000	14.6	.00
7.55	.2351	.0001	.0000	10.8	.00
7.58	.2363	.0002	.0000	7.6	.00
7.62	.2375	.0002	.0000	5.2	.00
7.65	.2387	.0002	.0000	3.4	.00
7.68	.2399	.0003	.0000	2.2	.00
7.71	.2411	.0003	.0000	1.4	.00
7.74	.2423	.0004	.0000	.8	.00
7.78	.2435	.0004	.0000	.5	.00
7.81	.2447	.0004	.0000	.3	.01
7.84	.2460	.0005	.0000	.2	.01
7.87	.2472	.0005	.0001	.1	.01
7.90	.2484	.0006	.0001	.1	.01
11.84	1.1369	.4130	.0353	.0	4.47
11.87	1.1879	.4491	.0361	.0	4.72
11.90	1.2390	.4859	.0368	.0	4.94
11.94	1.2901	.5233	.0375	.0	5.13
11.97	1.3412	.5614	.0381	.0	5.30
12.00	1.3922	.6001	.0387	.0	5.45
12.03	1.4020	.6075	.0074	.0	5.55
12.06	1.4116	.6150	.0074	.0	5.44
12.10	1.4213	.6224	.0074	.0	5.05
12.13	1.4310	.6298	.0074	.0	4.46
12.16	1.4407	.6373	.0075	.0	3.78
12.19	1.4503	.6448	.0075	.0	3.13
12.22	1.4600	.6523	.0075	.0	2.58

PROJECT : PLATEAU B4[illegible]0 YR 24 HR
(Continued)

TIME HOURS	ACCUMULATED RAINFALL INCHES	RUNOFF INCHES	RAINFALL EXCESS INCHES	UNIT HYDROGRAPH CFS	OUTFLOW HYDROGRAPH CFS

HYDROGRAPH PEAK= 5.55 cfs
TIME TO PEAK= 12.03 Hours
RUNOFF VOLUME= .49 Acre-Feet

PROJECT : PLATEAU B5 10 YR 24 HR

AREA= 5.4 ACRES
AVERAGE BASIN SLOPE= ~~10.0~~ PERCENT Not used
CURVE NUMBER= 90.
DESIGN STORM= 2.10 INCHES
STORM DURATION= 24.0 HOURS
~~HYDRAULIC LENGTH= 780. FEET~~
MINIMUM INFILTRATION RATE= .00 IN/HR

TP= .1667 HOURS QPCFS= 24.50 CFS QPIN= 4.4998 INCHES
C3= 22.1797 ITERATIONS= 8 SCS 24-hour

TIME HOURS	ACCUMULATED RAINFALL INCHES	RUNOFF INCHES	RAINFALL EXCESS INCHES	UNIT HYDROGRAPH CFS	OUTFLOW HYDROGRAPH CFS
7.23	.2208	.0000	.0000	.0	.00
7.27	.2223	.0000	.0000	1.2	.00
7.30	.2239	.0000	.0000	7.6	.00
7.33	.2254	.0000	.0000	16.3	.00
7.37	.2269	.0000	.0000	22.5	.00
7.40	.2285	.0000	.0000	24.5	.00
7.43	.2300	.0001	.0000	23.0	.00
7.47	.2316	.0001	.0000	19.4	.00
7.50	.2331	.0001	.0000	15.2	.00
7.53	.2344	.0001	.0000	11.2	.00
7.57	.2356	.0002	.0000	7.9	.00
7.60	.2369	.0002	.0000	5.4	.00
7.63	.2381	.0002	.0000	3.5	.00
7.67	.2394	.0003	.0000	2.3	.00
7.70	.2407	.0003	.0000	1.4	.00
7.73	.2419	.0003	.0000	.9	.00
7.77	.2432	.0004	.0000	.5	.01
7.80	.2444	.0004	.0000	.3	.01
7.83	.2457	.0005	.0001	.2	.01
7.87	.2470	.0005	.0001	.1	.01
7.90	.2482	.0006	.0001	.1	.01
11.83	1.1264	.4056	.0366	.0	4.67
11.87	1.1796	.4431	.0374	.0	4.98
11.90	1.2328	.4813	.0382	.0	5.24
11.93	1.2860	.5203	.0390	.0	5.47
11.97	1.3392	.5599	.0396	.0	5.67
12.00	1.3923	.6002	.0402	.0	5.85
12.03	1.4024	.6079	.0077	.0	5.96
12.07	1.4125	.6156	.0077	.0	5.85
12.10	1.4226	.6233	.0077	.0	5.44
12.13	1.4326	.6311	.0078	.0	4.80
12.17	1.4427	.6389	.0078	.0	4.07
12.20	1.4528	.6467	.0078	.0	3.38
12.23	1.4629	.6545	.0078	.0	2.79

PROJECT : PLATEAU B5[illegible]0 YR 24 HR
(Continued)

TIME HOURS	ACCUMULATED RAINFALL INCHES	RUNOFF INCHES	RAINFALL EXCESS INCHES	UNIT HYDROGRAPH CFS	OUTFLOW HYDROGRAPH CFS

HYDROGRAPH PEAK= 5.96 cfs
TIME TO PEAK= 12.03 Hours
RUNOFF VOLUME= .53 Acre-Feet

VAUGHN HANSEN ASSOCIATES

CLIENT Plateau
PROJ[illegible] Coal Surplus Piles
FEAT[illegible] New Prop Box at head of [illegible]2
PROJECT NO. 2-9-1

SHEET 1 OF 2
COMPUTED GSP
CHECKED
DATE APR 25, 1986

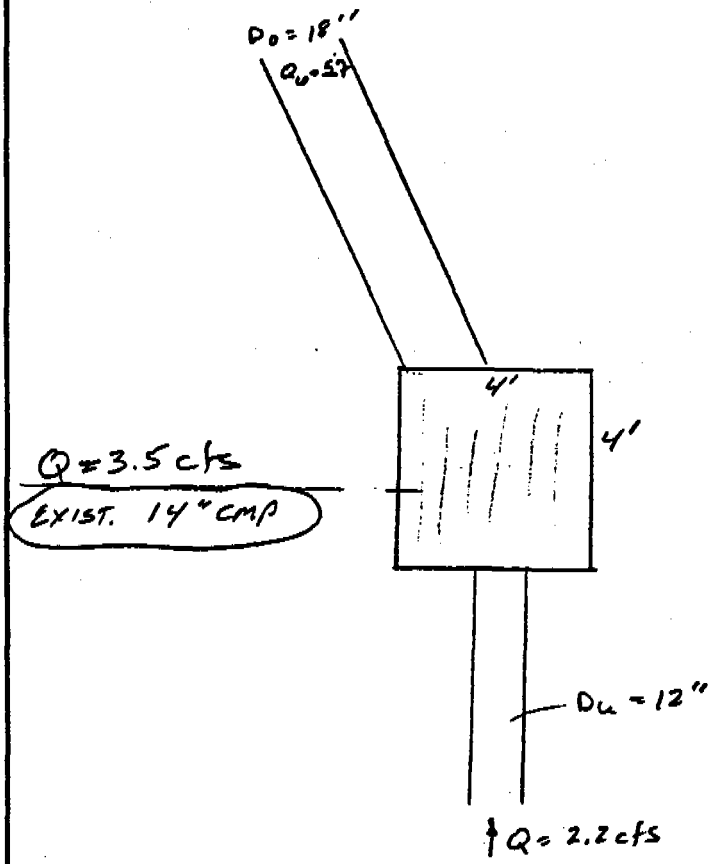

try 5' box depth

use $Q_u/Q_o = 0.5$ CHART IV-C

CHART IV-A say $V_o = 5$ fps $\Rightarrow h_g = \frac{k V_o^2}{2g} = k\ 0.39 \quad h_g \cong 2'$

$d/D_o = \frac{2' + 1.5'}{1.5'} = 2.3' \Rightarrow k = 4.7 \Rightarrow h_g = \underline{1.8'}$

∴ set invert out at 1.5' + 1.8' + 1' free board = 4.3'

~~USE 4' Box depth~~

~~3.5' min~~

see next sheet revised for 14" pipe

GRATE DESIGN

ASSUME PONDED CONDITION

$Q_{grate} = 3.5$ cfs

$Q = 0.61\ A \sqrt{2gH}$

assume max ponding depth = 0.5'

$\Rightarrow$ need $A_{open\ area} = \frac{3.5}{.61\sqrt{2g\,.5}} = 1\ ft^2$

using 50% reduction factor for plugging need $\boxed{2\ ft^2}$

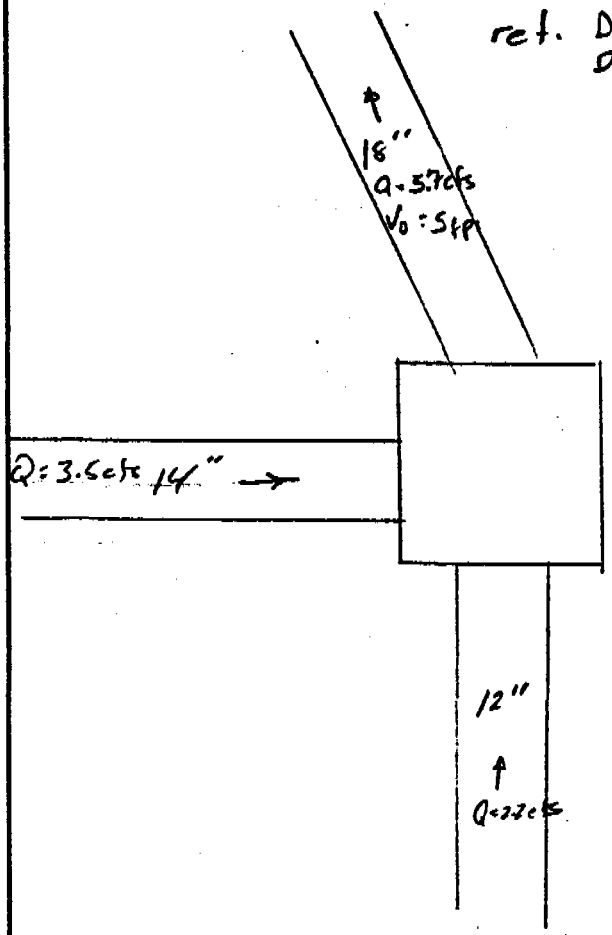

ref. Denver Regional Council of Governments Drainage Criteria Manual, Storm Sewer Design Figure 8.9

2. $V_o = 5$ fps

3. $\frac{D_u}{D_o} = \frac{12}{18} = 0.67$

$\frac{Q_u}{Q_o} = \frac{2.2}{5.7} = 0.39$

$K_u = 1.3$

$h_L = 1.3 \frac{5^2}{2g} = 0.5'$

say 2cfs in grate then

try $\frac{d}{D_o} = 1.3$

$Q_u/Q_o = \frac{2}{5.7} = .35 \Rightarrow K_u = .5$

$\therefore K_u = .5 + 1.3 = 1.8$

$h_L = 1.8 \frac{5^2}{2g} = 0.7'$

$\therefore$ design depth of inlet $= 1.5' + 0.7' + 1'$ FB $= \underline{3.2'}$

$\boxed{\text{Say } 3'}$

VAUGHN HANSEN ASSOCIATES

CLIENT Plateau
PROJECT Coal Surplus Piles
FEATURE Culvert Summary
PROJECT NO. 2-9-1

SHEET ___ OF ___
COMPUTED GJP
CHECKED ___
DATE APR 28, 198

Recommend Culvert size and parameters

Culvert	Q (cfs)	size Ø (inches)	length (ft)	Design Head water Depth (ft)	Rec. slope %	comment
A-1	2.2	12	22'	1.7'	3%	may desire 18"Ø for maintenance
A-2	5.7	18	80'H 48'V 95'	—	—	downspout w/ drop box inlet need erosion protection at outlet
A-3	11.5	24	40'	2'	2%	min. slope for inlet control = 1.1% if 18" used H_u = 2.5, V_o = 9.4 fps
A-4	13	24	40'	2.2'	2%	some scour expected at outlet but should be slight
A-5	13.5	24	45'	2.3'	2%	same as A4
A-6	16.6	24	60'	2.8'	14.8%	24" OK, but need to raise high point by 2.3' to 7436.7
A-7	16.6	24	365'H 94'V 380'	2.8'	25%	connect outlet to A-2 or provide erosion protection 13.2 fps
B-1	0.4	12	75'	—	—	may desire 18" for maintenance
B-2	0.9	12	35'	—	—	may desire 18" for maintenance
B-3	1.0	12	40'	—	—	may desire 18" for maintenance
B-4	5.6	18	65'	1.5'	3%	outlet velocity = 4.8 fps connect to B5
B-5	6.0	18	350 H 109 V 395'	1.6'	29%	provide erosion protection at outlet 11 fps

PROJECT: _____ DESIGNER: _____

DATE: APR 25, 1986

HYDROLOGIC AND CHANNEL INFORMATION

Coal surplus Piles Runoff Control
ditch realignment – A

A-1

Q_1 = _____ TW_1 = _____

Q_2 = _____ TW_2 = _____

(Q_1 = DESIGN DISCHARGE, SAY Q_{25}
Q_2 = CHECK DISCHARGE, SAY Q_{50} OR Q_{100})

SKETCH

STATION: _____

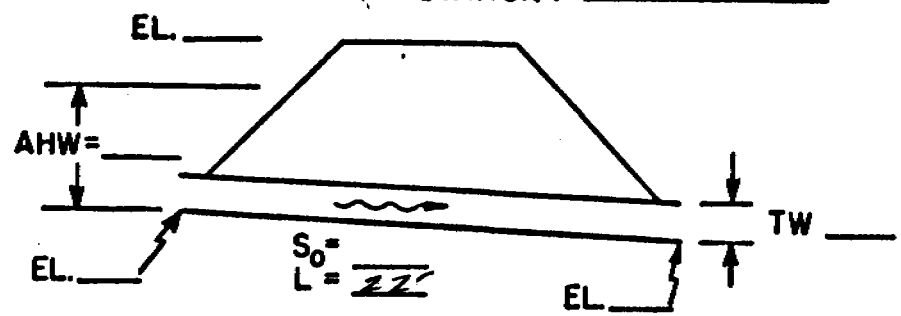

MEAN STREAM VELOCITY = _____

MAX. STREAM VELOCITY = _____

CULVERT DESCRIPTION (ENTRANCE TYPE)	Q	SIZE	HEADWATER COMPUTATION										CONTROLLING HW	OUTLET VELOCITY	COST	COMMENTS
			INLET CONT.		OUTLET CONTROL $HW = H + h_o - LS_o$											
			$\frac{HW}{D}$	HW	K_e	H	d_c	$\frac{d_c+D}{2}$	TW	h_o	LS_o	HW				
A-1 projection	2.2	12 cmp	1.05	1.05'	0.9	.5			1.8	1.8	5.7%	1.05				min slope for inlet control is 5.7%
assume same slope as ditch S=2.9% A-1 Projecting	2.2	12 cmp	1.05	1.05	0.9	.5			1.8	1.8	.64	1.7	outlet control	2.8		w/ 2.9% need H_w = 1.7'

SUMMARY & RECOMMENDATIONS:

Downspout A-2

slope max ≈ 10'/5' = 2 ft/ft

Average slope $\frac{46'}{80'}$ = 0.58 ft/ft

40% ⇒ Q_F = 30 cfs $\frac{q}{Q_F} = \frac{5.7}{30} = 0.19 \Rightarrow \frac{d}{D} = .34 \quad \frac{V}{V_f} = .65$

V_F = 17 fps $V_{5.7\,cfs}$ = 11 fps d = 0.51 ft

check

$$Q_F = \frac{1.49}{.024} A \left(\frac{A}{P}\right)^{2/3} \sqrt{S}$$

18" ⇒ A = 1.77 P = π D = 4.7 s

S = .58 ⇒ Q_F = 43 cfs (V_F = 24 fps) ∴ $\frac{q}{Q} = \frac{5.7}{43} = 0.13$

⇒ $\frac{d}{D}$ = .275 ⇒ d_0 = 0.41' $\frac{V}{V_f}$ = .58 ⇒ $\boxed{V = 14\text{ fps}}$

$F_r^2 = \frac{QT}{gA^3}$ $T = D \sin\beta$ $\cos\beta = (1 - \frac{2y}{D})$

$\beta = 63°$

$T = 1.34'$

$\boxed{F_r = 4.5}$

Outlet:

try 1' diameter D_{50}

$$\tau_c = .047(\gamma_s - \gamma) d_s = .047(165.4 - 62.4)1 = 4.84 \text{ lb/ft}^2$$

local scour depth $y_{scour} = \frac{q}{V_c}$

$$V_c = \left(\frac{\tau_c 8}{\rho f}\right)^{1/2} = \left(\frac{4.84\ 8}{1.936\ .066}\right)^{1/2} = 17\text{ fps}$$

if SF = 2 then τ_c = 2.42 and V_c = 12 fps

$y_{scour} = \frac{5.7/1}{12} = 0.5'$ ⇒ recess basin 0.5'

4 D = 6' use 10' basin length

Downspout A2 outlet

$D = 18''$ CMP

58% slope $Q = 5.7$ cfs $\Rightarrow$ $d_o = 0.5$ ft $V = 11$ fps

$F_r = 4.5$

what will jump depth be in grouted rock section

Momentum $M = \frac{Q^2}{gA} + A\bar{y}$

$$= \frac{Q^2}{gA} + \frac{D}{2}\left(\frac{D^2}{6}\sin^3\beta - A\cos\beta\right)$$

$$\cos\beta = \left(1 - \frac{2y}{D}\right)$$

$$A = \frac{D^2}{8}(\theta - \sin\theta) \qquad \theta = 2\beta$$

radians

for $d_o = 0.5'$ for $s_o = 40°$

$\beta = 70.5°$ $A = \frac{1.5^2}{8}(2.46 - \sin 2.46) = 0.515\ ft^2$

1.23..

for $d_o = 0.41$ $A = 0.39$ $V = 14.6$ fps $\underline{\beta = 1.10029}$

$$M = \frac{5.7^2}{g(0.39)} + \frac{1.5}{2}\left(\frac{1.5^2}{6}\sin^3\beta - A\cos\beta\right)$$

$M = 2.59$

try 3:1 triangular section

sequent depth $= 1.3'$ $F_r = 0.22'$

if no loss in transition then

$$E_1 = E_2 = \frac{V^2}{2g} + Y$$

$$E_1 = \frac{14.6^2}{2g} + .41 = 3.72 = E_2$$

$\therefore Y_2 = 0.36$ $F_r = 6.1$ $M_1 = 2.65$

if jump then

sequent depth $= 1.35'$ OK $\therefore$ riprap to 1.5 above flow line

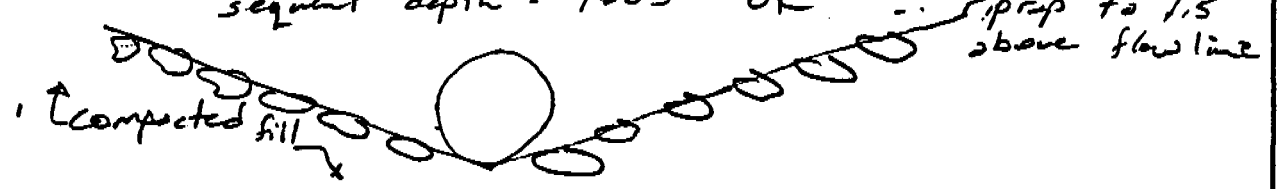

Grouted Riprap

$$\tau_c = .047 (\gamma_s - \gamma) d_s$$

$$\tau_o = \tfrac{1}{8} \rho f V^2$$

$$\tau_o = \tfrac{1}{8}\ 1.936\ .066\ (14.6)^2 = 3.40$$

if $D_{50} = d_s\ SF$ and $SF = 1.5$
then

$$\tau_o = .047\ (103) \frac{D_{50}}{1.5} \rightarrow$$

$$D_{50} = 1.0\ ft$$

Ben Grimes suggests grouted riprap, for grouted riprap can reduce size of rock by one size or use $D_{50} = 9''$ gradation as follows

% smaller by weight	Intermediate Rock Dimension
70 - 100	13
50 - 70	12
35 - 50	9
0	3

more less than 3" for grout penetration

thickness = 14 inches, grout should penetrate full thickness, leave surface rough

PROJECT: [illegible]

DESIGNER: [illegible]

DATE: APR 25, 1986

HYDROLOGIC AND CHANNEL INFORMATION

A3

Q_1 = _____ TW_1 = _____

Q_2 = _____ TW_2 = _____

(Q_1 = DESIGN DISCHARGE, SAY Q_{25}
Q_2 = CHECK DISCHARGE, SAY Q_{50} OR Q_{100})

SKETCH

STATION: _____

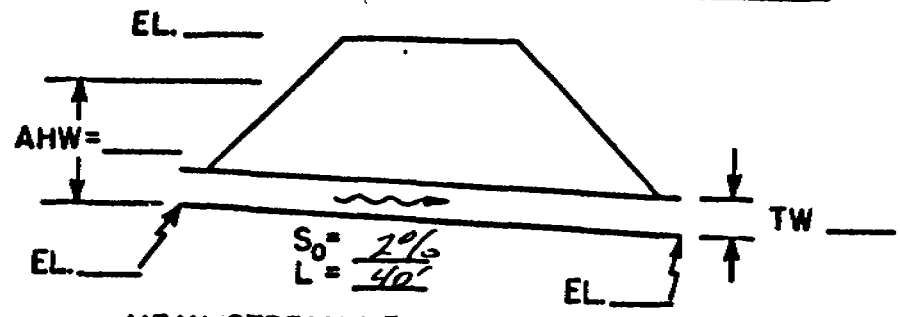

MEAN STREAM VELOCITY = _____

MAX. STREAM VELOCITY = _____

CULVERT DESCRIPTION (ENTRANCE TYPE)	Q cfs	SIZE	HEADWATER COMPUTATION: INLET CONT. HW/D	INLET CONT. HW	OUTLET CONTROL HW=H + h_0 − LS_0: K_e	H	d_c	$\frac{d_c+D}{2}$	TW	h_0	LS_0	HW	CONTROLLING HW	OUTLET VELOCITY	COST	COMMENTS
A3 projecting	11.5	24 CMP	1	2'	.9	.78	1.3	1.65	1	1.65	2% 0.8'	1.63	inlet	5.3		inlet control possible scour at outlet
min slope = ? for 24" A3	11.5	24	1.	2'	.9	.78	1.3	1.65	1	1.65	1.1% .44	2	balanced			Balanced at 1.1% slope
A3 projecting	11.5	18	2.3	3.5'	.9	2.8'	1.3	1.4	1	1.4	2% .8	3.4	inlet	7.4		erosion protection needed at outlet

SUMMARY & RECOMMENDATIONS:

use 24" CMP w/ projecting inlet and outlet, a scour hole may develop at outlet, 2% slope assumed above, but a minimum slope of 1.1% would be acceptable.

PROJECT: _____ DESIGNER: _____

DATE: APR 25, 1986

HYDROLOGIC AND CHANNEL INFORMATION

A-4

Q_1 = _____ TW_1 = _____

Q_2 = _____ TW_2 = _____

(Q_1 = DESIGN DISCHARGE, SAY Q_{25}
Q_2 = CHECK DISCHARGE, SAY Q_{50} OR Q_{100})

SKETCH

STATION: _____

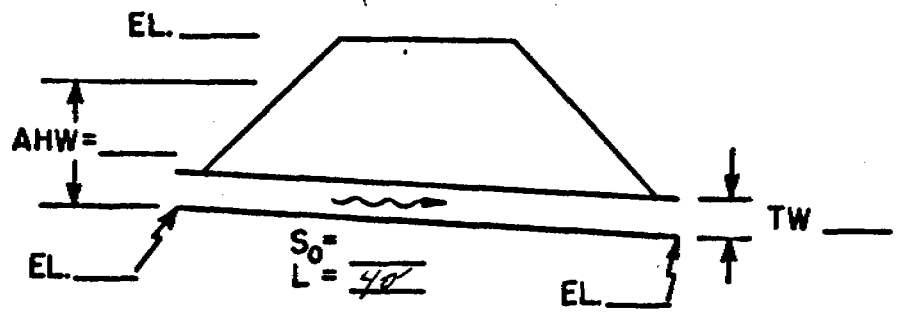

MEAN STREAM VELOCITY = _____

MAX. STREAM VELOCITY = _____

CULVERT DESCRIPTION (ENTRANCE TYPE)	Q	SIZE	HEADWATER COMPUTATION: INLET CONT.		OUTLET CONTROL $HW = H + h_o - LS_o$								CONTROLLING HW	OUTLET VELOCITY	COST	COMMENTS
			$\frac{HW}{D}$	HW	K_e	H	d_c	$\frac{d_c+D}{2}$	TW	h_o	LS_o	HW				
A-4 projecting	13	27	.9	2.0	.9	.62	1.3	1.8	1.	1.8	2% .8	1.62	inlet	5.6		OK
A-4 projecting	13	24	1.1	2.2	.9	.9	1.3	1.7	1.	1.7	2% .8	1.8	inlet	6		OK
A-4 projecting	13	18	2.6	3.9	.9	3.4	1.4	1.45	1.	1.45	2% .8	4	outlet	7.3		OK 4' HW?

SUMMARY & RECOMMENDATIONS:
A 24" CMP is suggested - to refine need more info on allowable headwater depth, some scour at the outlet can be expected

PROJECT: _____ DESIGNER: _____

DATE: APR 25, 1986

HYDROLOGIC AND CHANNEL INFORMATION

A5

Q_1 = _____ TW_1 = _____

Q_2 = _____ TW_2 = _____

(Q_1 = DESIGN DISCHARGE, SAY Q_{25}
Q_2 = CHECK DISCHARGE, SAY Q_{50} OR Q_{100})

SKETCH

STATION: _____

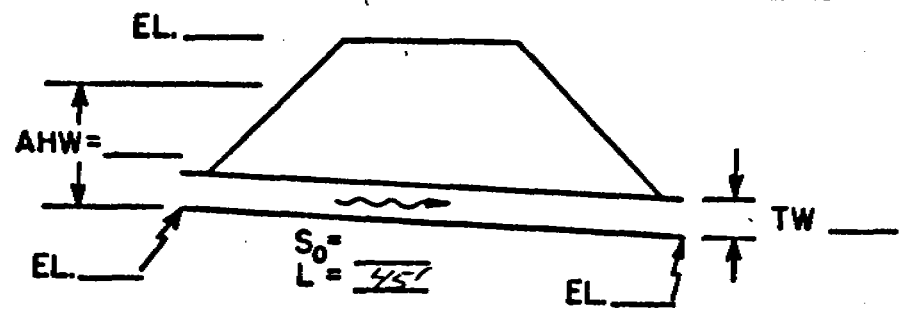

MEAN STREAM VELOCITY = _____

MAX. STREAM VELOCITY = _____

CULVERT DESCRIPTION (ENTRANCE TYPE)	Q	SIZE	HEADWATER COMPUTATION										CONTROLLING HW	OUTLET VELOCITY	COST	COMMENTS
			INLET CONT.		OUTLET CONTROL $HW = H + h_o - LS_o$											
			$\frac{HW}{D}$	HW	K_e	H	d_c	$\frac{d_c+D}{2}$	TW	h_o	LS_o	HW				
A5	13.5	24	1.15	2.3	.9	1.05	1.3	1.65	1	1.65	.9	1.8	inlet	6		OK

SUMMARY & RECOMMENDATIONS:

≈ same as A4 – see A4 for 27" & 18" data

PROJECT: _____

DESIGNER: CJF

DATE: APR 25, 1986

HYDROLOGIC AND CHANNEL INFORMATION

A 6

Q_1 = _____ TW_1 = _____

Q_2 = _____ TW_2 = _____

(Q_1 = DESIGN DISCHARGE, SAY Q_{25}
Q_2 = CHECK DISCHARGE, SAY Q_{50} OR Q_{100})

SKETCH

STATION: _____

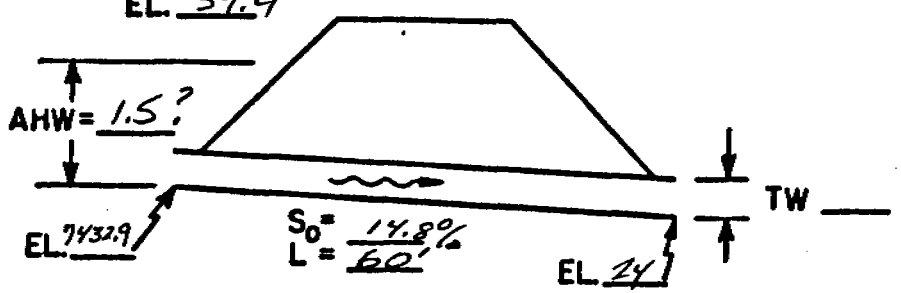

MEAN STREAM VELOCITY = _____

MAX. STREAM VELOCITY = _____

CULVERT DESCRIPTION (ENTRANCE TYPE)	Q	SIZE	HEADWATER COMPUTATION: INLET CONT.		OUTLET CONTROL HW=H + h_o − LS_o								CONTROLLING HW	OUTLET VELOCITY	COST	COMMENTS
			$\frac{HW}{D}$	HW	K_e	H	d_c	$\frac{d_c+D}{2}$	TW	h_o	LS_o	HW				
A6	16.6	27	1.08	2.4	.9	0.9	1.4	1.8		1.8	8.8	–	inlet			
A6	16.6	24	1.4	2.8'	.9	1.6	1.5	1.9		1.9	8.8		inlet	11.1		OK

SUMMARY & RECOMMENDATIONS:

24" OK, need to raise high point to elev. 32.9 + 2.8 + 1' freeboard = 7436.7 or berm height = 2.3'
either need erosion protection or connect directly to culvert A 7 (see back)

PROJECT: _____ DESIGNER: _____

DATE: APR 28, 1986

HYDROLOGIC AND CHANNEL INFORMATION

A-7 Downspout to Sed. Pond 4

Q_1 = _____ TW_1 = _____

Q_2 = _____ TW_2 = _____

(Q_1 = DESIGN DISCHARGE, SAY Q_{25}
Q_2 = CHECK DISCHARGE, SAY Q_{50} OR Q_{100})

SKETCH

STATION: _____

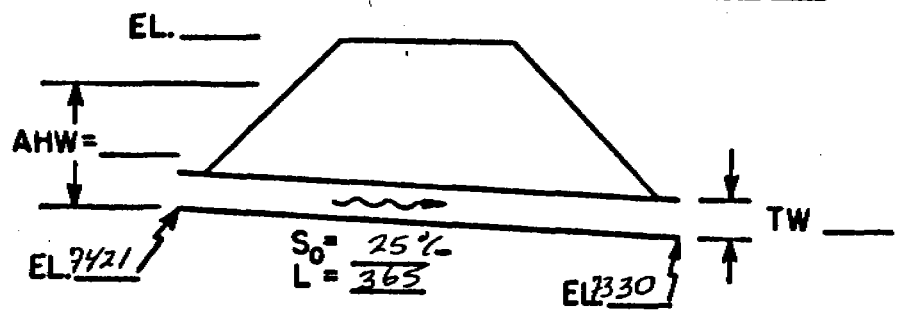

MEAN STREAM VELOCITY = _____

MAX. STREAM VELOCITY = _____

CULVERT DESCRIPTION (ENTRANCE TYPE)	Q	SIZE	HEADWATER COMPUTATION										CONTROLLING HW	OUTLET VELOCITY	COST	COMMENTS
			INLET CONT.		OUTLET CONTROL $HW=H+h_0-LS_0$											
			$\frac{HW}{D}$	HW	K_e	H	d_c	$\frac{d_c+D}{2}$	TW	h_0	LS_0	HW				
A7 projecting	16.6	24	1.4	2.8	.9									13.2		need erosion protection

SUMMARY & RECOMMENDATIONS:

provide erosion protection at outlet

PROJECT: _____

DESIGNER: _____

DATE: APR 25, 1986

HYDROLOGIC AND CHANNEL INFORMATION

B4 – outlet from sediment trap (catch basin)

Q_1 = _____ TW_1 = _____

Q_2 = _____ TW_2 = _____

(Q_1 = DESIGN DISCHARGE, SAY Q_{25}
Q_2 = CHECK DISCHARGE, SAY Q_{50} OR Q_{100})

SKETCH

STATION: _____

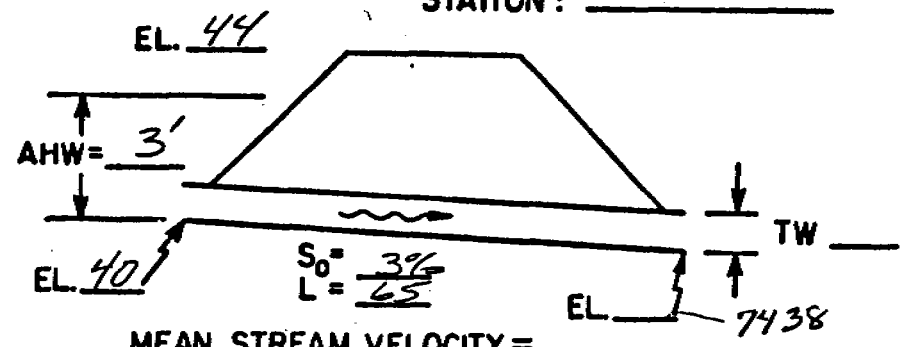

MEAN STREAM VELOCITY = _____

MAX. STREAM VELOCITY = _____

CULVERT DESCRIPTION (ENTRANCE TYPE)	Q	SIZE	HEADWATER COMPUTATION: INLET CONT.		OUTLET CONTROL HW=H + h_o − LS_o								CONTROLLING HW	OUTLET VELOCITY	COST	COMMENTS
			HW/D	HW	K_e	H	d_c	$\frac{d_c+D}{2}$	TW	h_o	LS_o	HW				
B4 projecting	5.6	18	1	1.5	.9	.63	.8	1.15	1	1.15	2	–	inlet	4.8		OK

SUMMARY & RECOMMENDATIONS:

18" ø CMP (see back for outlet velocity calc)

PROJECT: [illegible]

DESIGNER: [illegible]

DATE: APR 28, 1986

HYDROLOGIC AND CHANNEL INFORMATION

B-5 downspout to sed. pond. 4

Q_1 = _____ TW_1 = _____

Q_2 = _____ TW_2 = _____

(Q_1 = DESIGN DISCHARGE, SAY Q_{25}
Q_2 = CHECK DISCHARGE, SAY Q_{50} OR Q_{100})

SKETCH

STATION: _____

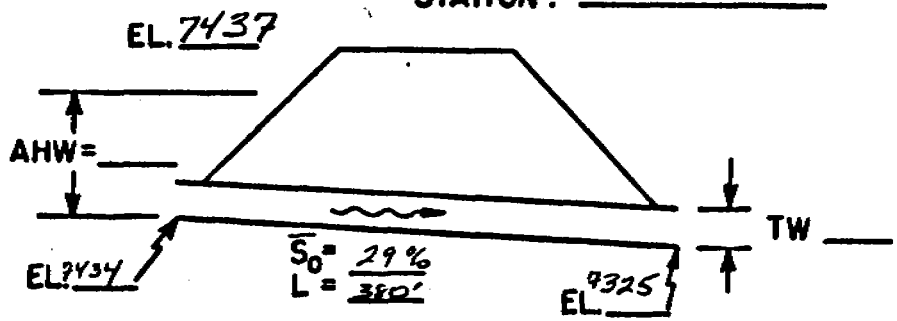

MEAN STREAM VELOCITY = _____

MAX. STREAM VELOCITY = _____

CULVERT DESCRIPTION (ENTRANCE TYPE)	Q	SIZE	HEADWATER COMPUTATION: INLET CONT.		OUTLET CONTROL HW=H + h_o − LS_o								CONTROLLING HW	OUTLET VELOCITY	COST	COMMENTS
			$\frac{HW}{D}$	HW	K_e	H	d_c	$\frac{d_c+D}{2}$	TW	h_o	LS_o	HW				
B-5 projecting	6	18	1.05	1.6	.9								inlet	11		need erosion protection

SUMMARY & RECOMMENDATIONS:
use 18", provide 1.6 + FB (say 1.4') = 3' of Hw may at inlet, provide erosion protection at outlet (see back)