0015

KAISER STEEL

KAISER STEEL CORPORATION
WESTERN COAL OPERATIONS
SUNNYSIDE, UTAH 84539
TELEPHONE 801-888-4421

17 September 1982

Mr Jean Doutre, Insp.
DIV. OF OIL, GAS & MINING
4241 State Office Bldg.
Salt Lake City, Utah, 84114

re: Coarse Refuse Sed. Pond
Sunnyside Mines
ACT/007/007

Dear Jean,

Submitted herewith are the revised calculations and plan for the Coarse Refuse Sediment Pond. Since I don't know who they should go to, would you please see that the proper individual gets them? (a copy has gone to Mr. Steve McNeal of the State Health Dept.)

We would like to upgrade this pond this fall so it will be ready for the Spring runoff; consequently, we need the Division's approval soon.

Sincerely,

John S. Huefner

John S. Huefner, PE.
Civil Engineer

Attachments

RECEIVED
SEP 21 1982
DIVISION OF
OIL, GAS & MINING

CALCULATION SHEET

SHT 1
8-18-82
rev. 9-16-82 *

COARSE REFUSE SED. POND

Use SCS Method re: TP-149 "Method for Est. Vol. & Rate of Runoff in Sml. Watersheds".

SURFACE DRAINAGE AREA — $\boxed{95.5 \text{ acres}}$ by planimeter on 1" = 500' scale map.

Area in sq. miles = $95.5 \times 43{,}560 / 5280^2 = \underline{0.1492 \text{ sq mi}}$

TOTAL PRECIP. (P_{24}) = $\boxed{1.9"}$ for 10yr/24 hr STORM (from NOAA area charts).

DETERMINE CN: use fig 9.5 NEH-4 w/factors — • assm'd Ground cover @ 10% GCD.
• C-B soil from NJF2
• Veg: SG: ...— Herbaceous. [semi-arid].

so CN(AMC-II) = $\frac{72(B)+84(C)}{2}$ = 78 Avg. Convert to AMC-I (table 10.1, NEH-4) ∴ CN = $\boxed{60}$ AMC-I

SOLVE for $S = \frac{1000}{CN} - 10$ ∴ $S_{AMC-I} = \frac{1000}{60} - 10 = \underline{6.67}_{I}$ ($S_{AMC-II} = \frac{1000}{78} - 10 = \underline{2.82}_{II}$)

CALCULATE Q (SCS) = $\frac{(P-.2S)^2}{P+.8S} = \frac{(1.9-.2\times 6.67)^2}{1.9+.8\times 6.67} = \boxed{0.0443"}$ VOL = $Q/12 \times A = \frac{.0443}{12}(95.5) = \underline{0.353 \text{ af}}$

AVERAGE SLOPE: 6580E(h) − 6190E(l) = 390' elev. diff & length 4300' ∴ slope = $\frac{390}{4300}$ = .091 (9.07%)

SOLUTION - TP-149:

STEP (1.) det. HYDRAULIC LENGTH (l) = $209(a)^{.6} = 209(95.5)^{.6} = \underline{3222'}$

STEP (2.) det. WATERSHED LAG (L) = $\frac{l^{.8}(S+1)^{.7}}{1900Y^{.5}}$ where Y is average slope (%) = $\frac{390}{3222}$ = 12.1% *

$L = (3222)^{.8}(7.67)^{.7}/1900(12.1)^{.5} = \underline{0.4034}$ hrs.

SHAPE FACTOR (l/w) where l = 43,560 a/w & w = 43,560(95.5)/3222 = 1291.0

∴ l/w = 3222/1291 = 2.50 watershed shape factor.

STEP (3.) det. DURATION INCREMENT (ΔD) = 0.4L = .4(.4034) = $\underline{0.1614}$ hrs.

STEP (4.) det EFF. PEAK RUNOFF PERIOD (7ΔD) = 7ΔD = 7(.1614) = 1.130 hrs.

STEP (5.) tab. Typ. RUNOFF DISTRIBUTION in table 1 [P_{24} = 1.9; CN = 78; Q = 0.0443"]
SEE STEP 9. (incorporated in TABLE).

STEP (6.) det. WORKING CURVE — $P_B = 11.88 - 4.5(\overset{\Delta D}{.16}) = 11.15$ hrs; & $P_E = 11.88 + 7(\overset{\Delta D}{.16}) = 13.01$ hrs.

STEP (7.) det. INSTANT PEAK DISCHARGE

Peak Rate of Discharge (q_p) = KAQ/T_p where: A = area; Q = runoff; K = constant; T_p = time to peak.

$T_p = D/2 + L = \frac{.4}{2} + .4034 = 12.40$ hrs.

so $q_p = 484(95.5).0443/12.4 = 165.13$ cfs for spillway.

$\Delta q_p = \frac{484 A \Delta Q}{\frac{\Delta D}{2} + L} = \frac{484(.1492)\Delta Q}{.1614/2 + .4034} = \underline{149.17 \Delta Q}$

STEP (8.) PLOT WORKING CURVE or USE EQUATION: mass Q = $\frac{(\text{mass } P - .2S)^2}{\text{mass } P + .8S}$

where $S = \frac{1000}{CN} - 10 = \frac{1000}{78} - 10 = \underline{2.82}$ AMC-II

(OPTED TO USE EQ, SO SEE TABLE IN STEP 9).

COL 1. 7 div → ΔD
" 2. time in step 6 div into 7 incr.
" 3. P_x/P_{24} from fig using case II
" 4. mass P from col 3 × 1.9"

COL 5. solve mass Q eq. (see above)
" 6. diff bet col 5 values
" 7 Δq from ΔQ × 24.3
" 9. result from col 7 × col 8.

KSC/SUNNYSIDE MINES.
ACT/007/007
J.S. Huefner, PE.

CALC. SHT. (cont.)
C.S. REF. SED. POND.

SHT 2
8-18-82
rev. 9-17-82 *

STEP (9.) Construct TABLE: *

(1.) increment	(2.) time	(3.) P_x/P_{24} ×1.9	(4.) mass P	(5.) mass Q	(6.) ΔQ ×149.17	(7.) Δq	(8.) Y	(9.) Y(Δq)
	11.15	.246	.467	—				
ΔD_1	11.42	.280	.532	.0004	.0004	.055	.2	.011
ΔD_2	11.68	.345	.655	.0029	.0025	.373	.4	.149
ΔD_3	11.95	.638	1.212	.1212	.1183	17.64	.6	10.583
ΔD_4	12.21	.703	1.366	.1658	.0446	6.65	.8	5.323
ΔD_5	12.48	.732	1.391	.1874	.0216	3.23	1.0	3.230
ΔD_6	12.74	.761	1.446	.2101	.0227	3.38	.67	2.268
ΔD_7	13.01	.773	1.469	.2198	.0097	1.44	.33	.475
							TOTAL	23.04 cfs.

$\boxed{\therefore q_p = 23.04 \text{ cfs}}$

EST. SED. PRODUCTION (USLE): $A = R \cdot K \cdot LS \cdot C \cdot P$ (refer TR-51)

R (Rainfall Factor) = 18 from fig 1 (M7-0-23697) EPA-908/4.77-005 Publ. [Adj to div. ln]

K (Soil Erod. Factor) = .20 wtd avg from appendix A of EPA publ.

LS (Slope Grad. Factor) = 10.38 from $\left(\frac{\lambda}{72.6}\right)^{.5}\left(\frac{430x^2+30x+.43}{6.57415}\right)$ where $\lambda = l$ & $x = \sin(\text{slope } \%)$

so $LS = \left(\frac{3222}{72.6}\right)^{.5}\left(\frac{430(\sin 6.9)^2+30\sin 6.9+.43}{6.57415}\right) = 6.66(1.56) = 10.38$ *

C (Crop Factor) = .36 est. from Table 4

P (Eros. Cntl Pract.) = .90 est. from ditches, depressions, etc.

$\therefore A = 18(.20)\,10.38\,(.36)\,.90 = 12.11$ Tons/ac/yr × 95.5 ac = 1156 Tons/yr.

& $1156T \times \frac{2000\#/T}{120\#/CF} = 19{,}272$ CF/YR

EXCESSIVE *

MODIFIED UNIV. SOIL LOSS EQ. (MUSLE):

$Y = 95(Q \times q_p)^{.56} K\ LS\ C\ P$ is sed yield per storm event (10yr/24hr)

$\therefore Y = 95(.0443 \times 23.04)^{.56}\,.20(10.38)\,.36(.90) = 64.64$ Tons/event × $\frac{2000}{120}$ = 1077 CF/Storm

SPILLWAY DESIGN— See STEP (7.) for q_{peak} = 141.45 cfs.

25yr/24hr STORM - P_{24} = 2.3" & solve for $Q = \frac{(2.3-.2(2.82))^2}{2.3+.8(2.82)} = .6615''/12 \times A = 5.266$

= 159.2 CFM.

DETERMINE SED. POND SIZE:

RUNOFF "Q" = 0.0443 = .353 af = 15,377 CF say 15,380 CF

SED YIELD "Y" = 64.64T/ev = 1077 CF × 1.5 ev/yr × 3 yrs. = 4,850 CF

TOTAL 20,230 CF min. pond size

DESIGN POND @ 20,250 CF *

$\therefore$ MIN. POND DIM. = 6'd × 45'w × 75 l = 20,250 cf OK.

w/1:2 inside & 1:3 outside slopes

BERM WIDTH (CREST)

$w = h + 35/5$

$\frac{8+35}{5} = 8.6'$ say 9'

* POND DIM: $6 \times 12(33+63) + \frac{\pi}{3}(12)^2 6 + 6(33)63$

$6912 + 905 + 12{,}474 = 20{,}290$ CF OK

DECANT DEPTH: $3.1' \times 6.2(50.8+80.8) + \frac{\pi}{3}(6.2)^2 3.1 + 3.1(50.8)80.8 =$

* 2529 + 125 + 12,724 = 15,378 cf OK

KSC/SUNNYSIDE MINES
ACT/007/007
J. S. Huefner, PE

SHT 3
5-27-82
REV1 8-18-82
REV2 9-17-82*

CS. REF. SED. POND (cont.)

POND SIZE & PLAN

SUMMARY: P = 1.9" for 10yr 24hr storm.
Q = 0.0443" = 0.353 af = 15,380 cf.
qp = 23.04 cfs*
Y (MUSLE) = 64.6 Tons.*

SD: RUNOFF = 15,380 CF
SEDIMENT = 4,850 CF
TOTAL 20,230 CF * DES for 20,250 CF.

set for SITE: 6'd* x 45'w* x 75'l* = 20,250 CF (OK)

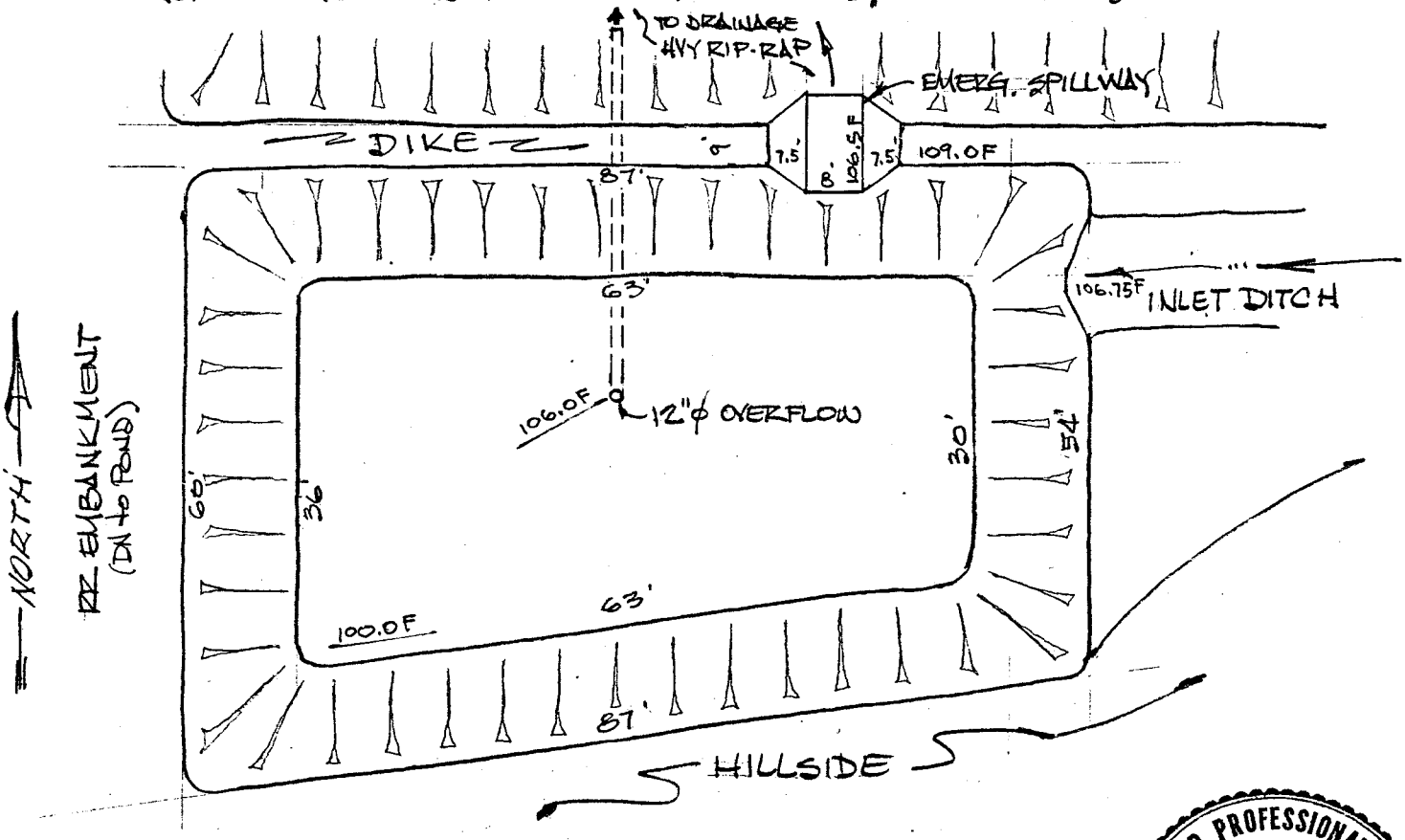

PLAN

Scale: 1" = 20'

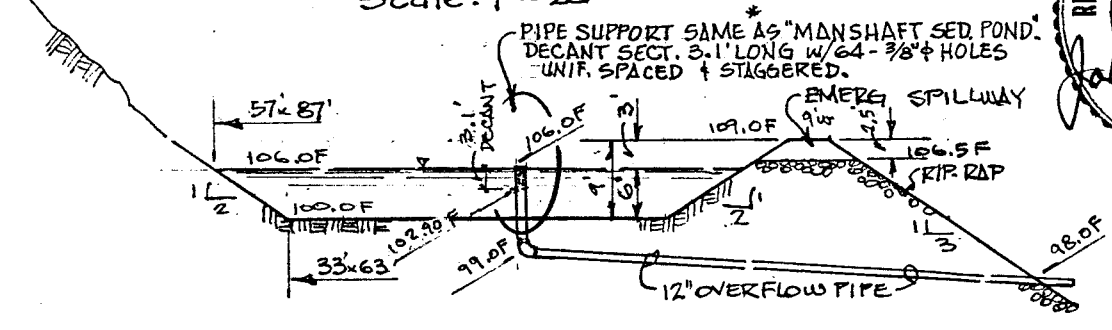

SECTION

REGISTERED PROFESSIONAL ENGINEER
No. 3250
JOHN S. HUEFNER
STATE OF UTAH

KSC/SUNNYSIDE MINES
ACT/007/007

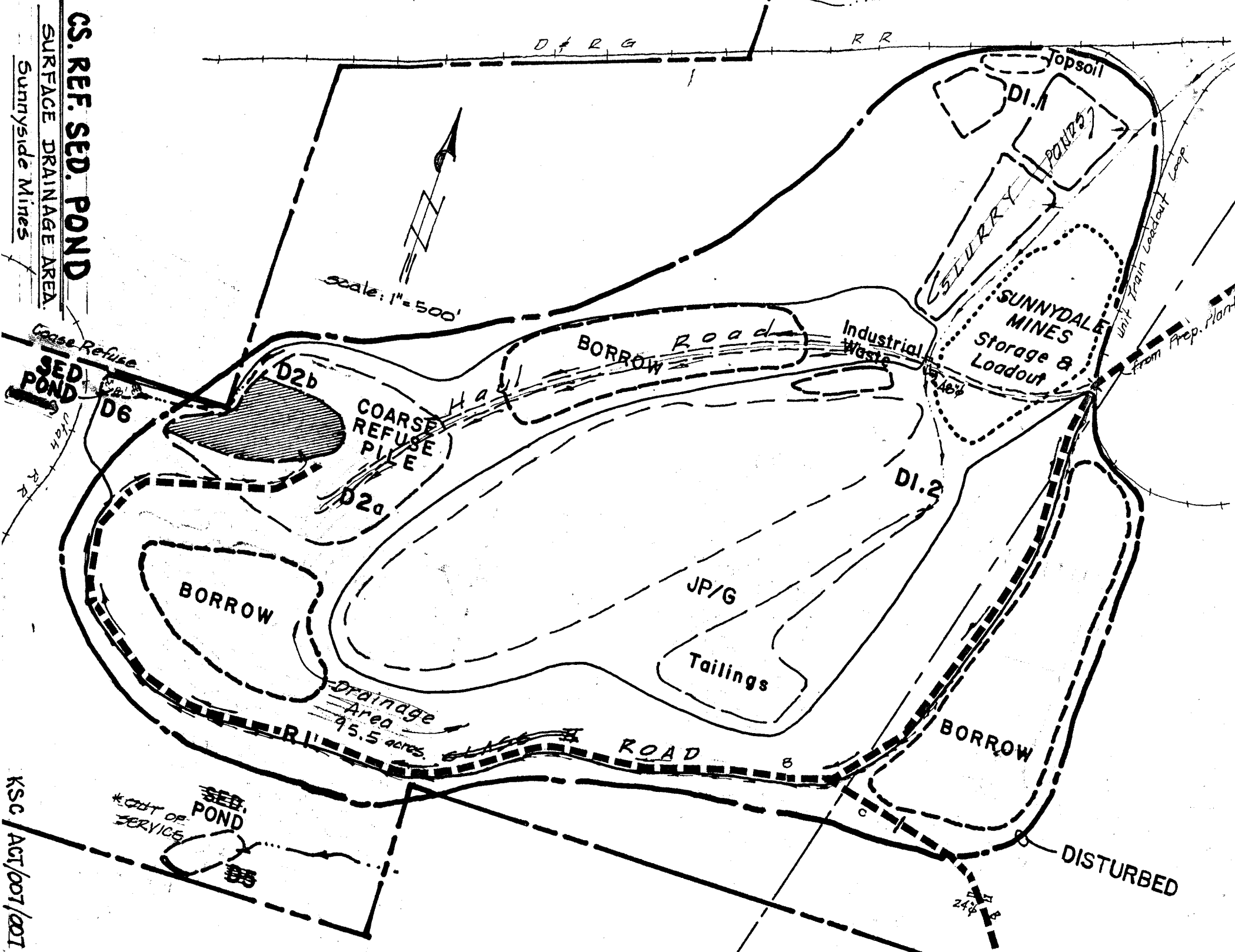
CS. REF. SED. POND
SURFACE DRAINAGE AREA.
Sunnyside Mines
D & R G
R R
Topsoil
DI.1
SLURRY PONDS
SUNNYDALE MINES
Storage & Loadout
Unit Train Loadout Loop
from Prep. Plant
Industrial Waste
48"φ
BORROW
Road
Haul
Scale: 1" = 500'
Coarse Refuse
SED POND
D6
D2b
COARSE REFUSE PILE
D2a
DI.2
JP/G
Tailings
BORROW
Drainage Area 95.5 acres.
R1
CLASS B
ROAD
B
C
BORROW
DISTURBED
24"φ
*OUT OF SERVICE
SED. POND
D5
KSC ACT/007/001