FILE 007/007
CC: SK + Wayne

0019

KAISER STEEL

KAISER STEEL CORPORATION
WESTERN COAL OPERATIONS
SUNNYSIDE, UTAH 84539
TELEPHONE 801-888-4421

19 August 1982

Ms Sally Kefer
Div. of Oil, Gas & Mining
4241 State Office Bldg.
Salt Lake City, Utah, 84114

re: Coarse Refuse Sed. Pond
Sunnyside Mines
ACT/007/007

Dear Sally,

Submitted herewith are the corrected calculations & plans of the Coarse Refuse Sedimentation Pond.

It was noted that some of the constants and factors used in the original submittal were in error. These have been corrected and the plans revised per Section 817.46.

Your timely review and approval will be appreciated, since this pond needs to be constructed soon, for the new haul road is nearing completion.

Please call if there are any questions.

Sincerely,

John S. Huefner, PE.
Civil Engineer

enclosures

RECEIVED
AUG 20 1982
DIVISION OF
OIL, GAS & MINING

CALCULATION SHEET

SHT 1
8-18-82

COARSE REFUSE SED. POND

Use SCS Method re: TP-149 "Method for Est. Vol. & Rate of Runoff in Sml. Watersheds".

SURFACE DRAINAGE AREA – $\boxed{95.5 \text{ acres}}$ by planimeter on 1" = 500' scale map.

Area in sq. miles = $95.5 \times 43{,}560 / 5280^2 = \underline{0.1492 \text{ sq mi}}$

TOTAL PRECIP. (P_{24}) = $\boxed{1.9"}$ for 10yr/24 hr STORM (from NOAA area charts).

DETERMINE CN: use fig 9.5 NEH-4 w/factors — • assm'd Ground Cover @ 10% GCD.
• C-B soil from NJF2
• Veg: SG: — Herbaceous. [semi-arid].

so CN(AMC-II) = $\frac{72(B)+84(C)}{2}$ = 78 Avg. Convert to AMC-I (table 10.1, NEH-4) ∴ CN = $\boxed{60}$ AMC-I

SOLVE for $S = \frac{1000}{CN} - 10$ ∴ $S_{AMC-I} = \frac{1000}{60} - 10 = 6.67_I$ ($S_{AMC-II} = \frac{1000}{78} - 10 = \underline{2.82_{II}}$)

CALCULATE Q (SCS) = $\frac{(P-.2S)^2}{P+.8S} = \frac{(1.9-.2\times6.67)^2}{1.9+.8\times6.67} = \boxed{0.0443"}$ VOL = $Q/12 \times A = \frac{.0443}{12}(95.5) = \underline{0.353 \text{ af}}$

AVERAGE SLOPE: 6580E(h) – 6190E(l) = 390' elev. diff & length 4300' ∴ slope = $\frac{390}{4300}$ = .091

SOLUTION – TP-149:

STEP (1.) det. HYDRAULIC LENGTH (l) = $209(a)^{.6} = 209(95.5)^{.6} = \underline{3222'}$

STEP (2.) det. WATERSHED LAG (L) = $\frac{l^{.8}(S+1)^{.7}}{1900Y^{.5}}$ where Y is average slope $\frac{390}{3222}$ = .121

$L = (3222)^{.8}(2.82)^{.7}/1900(.121)^{.5} = \underline{2.476}$ hrs.

SHAPE FACTOR (l/w) where l = 43,560 a/w & w = 43,560(95.5)/3222 = 1291.0

∴ l/w = 3222/1291 = 2.50 watershed shape factor.

STEP (3.) det. DURATION INCREMENT (ΔD) = 0.4L = .4(2.476) = $\underline{0.9905}$ hrs.

STEP (4.) det EFF. PEAK RUNOFF PERIOD (7ΔD) = 7ΔD = 7(.9905) = 6.934 hrs.

STEP (5.) tab. Typ. RUNOFF DISTRIBUTION in table 1 [P_{24} = 1.9; CN = 78; Q = 0.0443"]
SEE STEP 9. (incorporated in TABLE).

STEP (6.) det. WORKING CURVE — $P_B = 11.88 - 4.5(\frac{\Delta D}{.99}) = 7.42$ hrs; & $P_E = 11.88 + 7(\frac{\Delta D}{.99}) = 18.81$ hrs.

STEP (7.) det. INSTANT PEAK DISCHARGE

Peak Rate of Discharge (q_p) = KAQ/T_p where: A = area; Q = runoff; K = constant; T_p = time to peak.

$T_p = D/2 + L = \frac{24}{2} + 2.476 = 14.476$ hrs.

so $q_p = 484(95.5).0443/14.476 = 141.45$ cfs for spillway.

$\Delta q_p = \frac{484 A \Delta Q}{\frac{\Delta D}{2} + L} = \frac{484(.1492)\Delta Q}{.9905/2 + 2.476} = \underline{24.305 \Delta Q}$

STEP (8.) PLOT WORKING CURVE <u>or</u> USE EQUATION: mass Q = $\frac{(\text{mass } P - .2S)^2}{\text{mass } P + .8S}$

where $S = \frac{1000}{CN} - 10 = \frac{1000}{78} - 10 = 2.82$ AMC-II

(OPTED TO USE EQ, SO SEE TABLE IN STEP 9).

COL 1. 7 div – ΔD
" 2. time in Step 6 div into 7 incr.
" 3. P_x/P_{24} from fig using case II
" 4. mass P from Col 3 × 1.9"
COL 5. solve mass Q eq. (see above)
" 6. diff bet Col 5 Values
" 7 Δq from ΔQ × 24.3
" 9. result from Col 7 × Col 8.

KSC/SUNNYSIDE MINES.
ACT/007/007
J.S. Huefner, PE.

CALC. SHT. (cont.)
C.S. REF. SED. POND.

SHT 2
8-18-82

STEP (9.) Construct TABLE:

(1.) increment	(2.) time	(3.) P_x/P_{24} ×1.9	(4.) mass P	(5.) mass Q	(6.) ΔQ ×24.3	(7.) Δq	(8.) Y	(9.) Y(Δq)
	7.42	.110	.209	—o—			.2	—o—
ΔD_1	9.05	.151	.287	—o—	—o—		.4	
ΔD_2	10.68	.218	.414	.008	.008	.194	.6	.078
ΔD_3	12.30	.713	1.355	.173	.165	4.010	.8	2.406
ΔD_4	13.93	.822	1.562	.261	.088	2.139	1.0	1.711
ΔD_5	15.56	.872	1.657	.305	.044	1.069	.67	1.069
ΔD_6	17.19	.906	1.721	.337	.032	.778	.33	.521
ΔD_7	18.81	.937	1.780	.366	.029	.705		.233
							TOTAL	6.02 cfs.

$\therefore q_p = 6.02$ cfs

EST. SED. PRODUCTION (USLE): $A = R \cdot K \cdot LS \cdot C \cdot P$ (refer TR-51)

R (Rainfall Factor) = 18 from fig 1 (MT-0-23697) EPA-908/4-77-005 Publ. [Adj to dur ln]

K (Soil Erod. Factor) = .20 wtd avg from appendix A of EPA publ.

LS (Slope Grad. Factor) = 56.45 from $\left(\frac{\lambda}{72.6}\right)^{.5}\left(\frac{430x^2+30x+.43}{6.57415}\right)$ where $\lambda = l$ & $x = \sin(\text{slope } \%)$

so $LS = \left(\frac{3222}{72.6}\right)^{.5}\left(\frac{430(\sin 6.9)^2+30\sin 6.9+.43}{6.57415}\right) = 56.45$

C (Crop Factor) = .36 est. from Table 4

P (Eros. Cntl Pract.) = .90 est. from ditches, depressions, etc.

$\therefore A = 18(.20)\,56.45(.36)\,.90 = 65.84$ Tons/ac/yr × 95.5 ac = 6288 Tons/yr.

& $6288T \times \frac{2000\#/T}{120\#/CF} = 104{,}800$ CF/yr

EXCESSIVE *

MODIFIED UNIV. SOIL LOSS EQ. (MUSLE):

$Y = 95(Q \times q_p)^{.56}\,K\,LS\,C\,P$ is sed yield per storm event (10yr/24hr)

$\therefore Y = 95(.0443 \times 6.02)^{.56}\,.20(56.45)\,.36(.90) = \underline{165.8}$ Tons/event × $\frac{2000}{120}$ = 2763 CF/storm

SPILLWAY DESIGN— See STEP (7.) for q_{peak} = 141.45 cfs.

25yr/24hr STORM - P_{24} = 2.3" & solve for $Q = \frac{(2.3-.2(2.82))^2}{2.3+.8(2.82)} = .6615''/12 \times A = 5.260$

= 159.2 CFM.

DETERMINE SED. POND SIZE:

RUNOFF "Q" = 0.0443 = .353 af = 15,377 CF say 15,380 CF

SED YIELD "Y" = 165.8 T/ev = 2763 CF × 1.5 ev/yr × 3 yrs. = 12,435 CF

TOTAL 27,815 CF min. pond size

DESIGN POND @ 28,000 CF

$\therefore$ MIN. POND DIM. = 6'd × 50'w × 94'l = 28,200 CF OK.

w/1:2 inside & 1:3 outside slopes

BERM WIDTH (CREST)

$w = h + 35/5$

$\frac{8+35}{5} = 8.6'$ say 9'

POND DIM: $\overset{d}{6} \times 12(38+82) + \frac{\pi}{3}(12)^2 6 + 6(38)82$

$8640 + 905 + 18696 = 28{,}240$ CF OK

DECANT DEPTH: $\overset{d}{2.75} \times 5.5(51+95) + \frac{\pi}{3}(5.5)^2 2.75 + 2.75(51)95$

$2208 + 87 + 13{,}324 = 15{,}619$ CF OK.

KSC/SUNNYSIDE MINES
ACT/007/007
J. S. Huefner, PE

CS. REF. SED. POND (cont.)

POND SIZE & PLAN

SUMMARY: P = 1.9" for 10yr 24hr storm.
Q = 0.0443" = 0.353 af = 15,380 cf.
qp = 6.02 cfs
Y (MUSLE) = 165.8 Tons.

SO: RUNOFF = 15,380 CF
SEDIMENT = 12,435 CF
TOTAL 27,815 CF DES for 28,000 CF.

act for SITE: 6'd x 50'w x 94'l = 28,200 CF (OK)

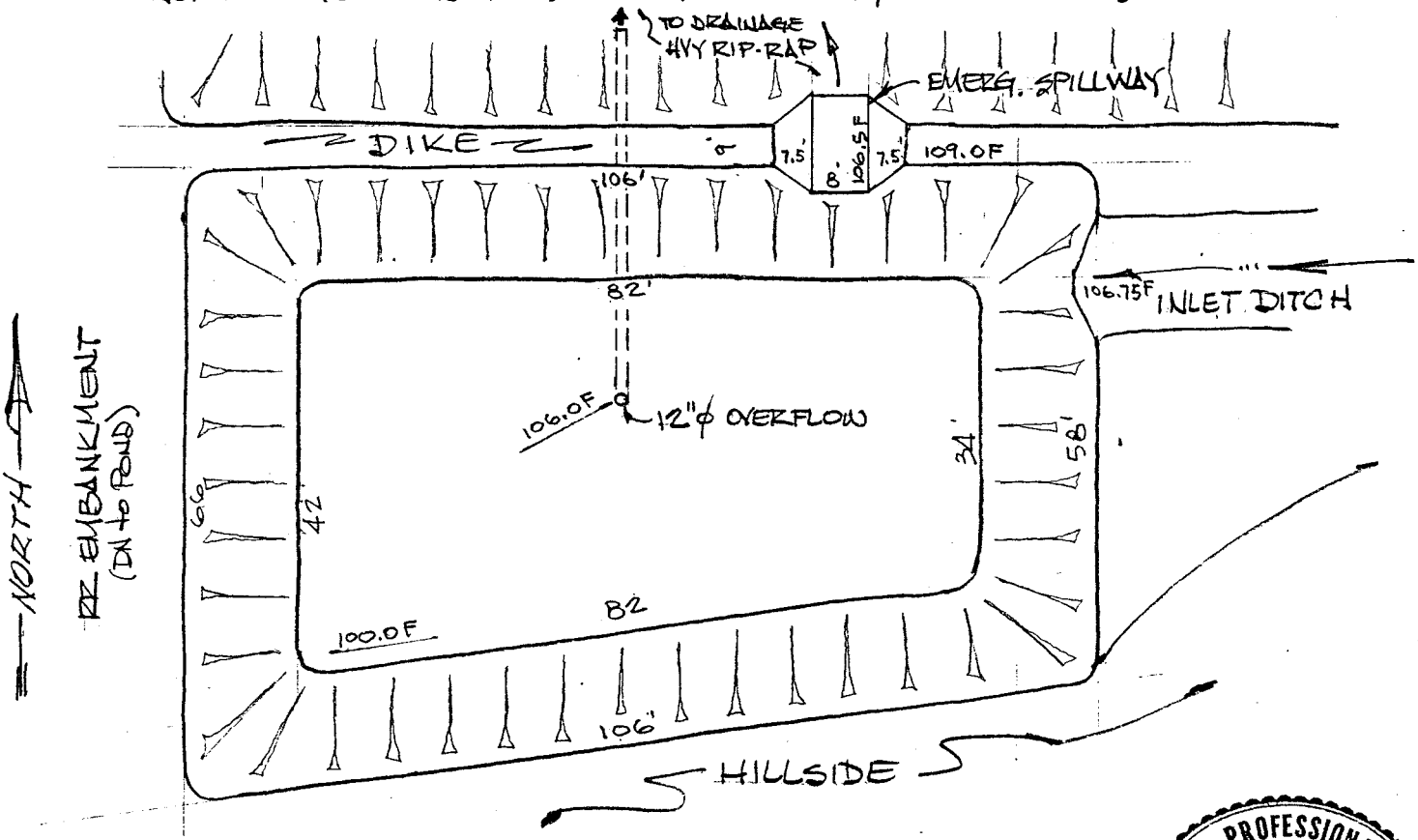

PLAN

Scale: 1" = 20'

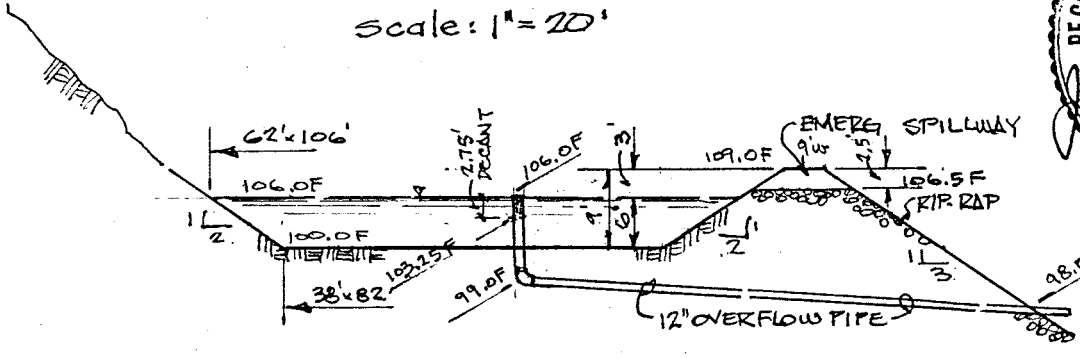

SECTION

REGISTERED PROFESSIONAL ENGINEER
No. 3250
JOHN S. HUEFNER
STATE OF UTAH

KSC/SUNNYSIDE MINES
ACT/007/007

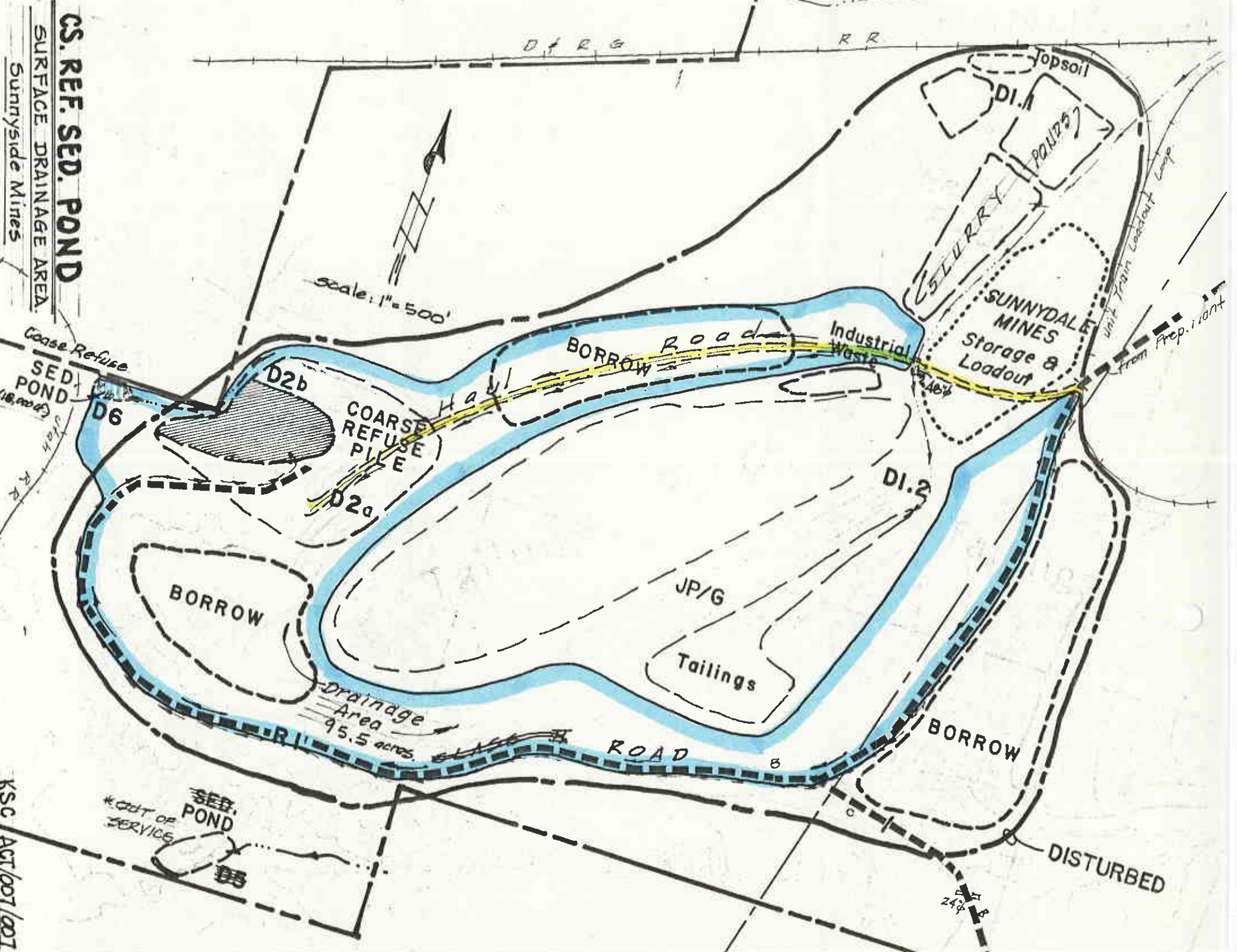
CS. REF. SED. POND
SURFACE DRAINAGE AREA
Sunnyside Mines
Scale: 1" = 500'
D & R G R R
Topsoil
DI.1
Pallets
SLURRY
SUNNYDALE MINES
Storage & Loadout
Unit Train Loadout Loop
From Prep. Plant
Industrial Waste
BORROW
Road
Haul
Coase Refuse
SED. POND
D6
D2b
COARSE REFUSE PILE
D2a
DI.2
JP/G
Tailings
BORROW
Drainage Area 95.5 acres
ROAD
BORROW
DISTURBED
*OUT OF SERVICE
SED. POND
D5
KSC ACT/007/007