0037

~~CC SK~~

ACT 007/007

KAISER STEEL

KAISER STEEL CORPORATION
WESTERN COAL OPERATIONS
SUNNYSIDE, UTAH 84539
TELEPHONE 801-888-4421

27 May 1982

Ms Sally Kefer
Div. Of Oil, Gas & Mining
4241 State Office Bldg.
Salt Lake City, Utah, 84114

re: Coarse Refuse Sed. Pond
Sunnyside Mines
Act/007/007

Dear Sally,

Please find enclosed the calculations and design plan for the Coarse Refuse Sediment Pond lying below the Coarse Refuse disposal pile and the new Haul Road.

We would appreciate receiving Division approval for construction as soon as possible. If you have any questions please ask.

Sincerely,

John S. Huefner, PE
Civil Engineer

CALCULATION SHEET

COARSE REFUSE SED. POND

Use SCS METHOD re: TP-149 "Method for Est. Vol. & Rate of Runoff in Sml. Watersheds".

SURF. DRAINAGE AREA – 50.6 (old Hl Rd) + 44.9 (New Hl Rd) = **95.5** Acres. by Planimeter

Area in Sq Miles = 95.5 × 43,560/5280² = 0.1492 mi².

TOTAL PRECIP. (P_{24}) = **1.9"** for 10 yr 24 hr storm (from NOAA charts of area)

assm'd ground cover @ 10% GCD.

CN —— CN(AMC-II) = $\frac{72(B)+84(C)}{2}$ = 78 avg. CONVERT TO AMC-I since area semi-arid.

from table 10.1, NEH-4 CN 78 AMC-II = CN **60** AMC-I

$S = \frac{1000}{CN} - 10 = \frac{1000}{60} - 10 =$ **6.67** (calc re: table 10.1 NEH-4)

SCS $Q = \frac{(P-.2S)^2}{P+.8S} = \frac{(1.9-.2\times6.67)^2}{1.9+.8\times6.67} =$ **0.0443"**

VOL = Q/12 × A = .0443"/12 × 95.5 = 0.352 ac.ft. (× 43,560 = 15,348 cf).

TP-149/ STEP (1.) det. HYDRAULIC LENGTH (ℓ) = $209(a)^{.6}$ = $209(95.5)^{.6}$ = 3222'

STEP (2.) det. WATERSHED LAG (L) = $\frac{\ell^{.8}(S+1)^{1.67}}{9000\,Y^{.5}}$ where Y is avg slope $\frac{H}{\ell} = \frac{400}{3222} = 12.4\%$

L = $(3222)^{.8}(6.67+1)^{1.67}/9000(12.4)^{.5}$ = 0.607 hrs (× 60 min/hr = 36½ min)

SHAPE FACTOR (ℓ/w) where ℓ = 43,560 a/w or w = $\frac{43{,}560\,a}{\ell} = \frac{43{,}560(95.5)}{3222} = 1291'$

or w = $208.4(95.5)^{.4}$ = 1291'

∴ ℓ/w = 3222/1291 = 2.50 watershed shape factor.

STEP (3.) det DURATION INCREMENT (ΔD) = 0.4 L = .4(.607) = 0.2428 hrs (15 min.)

STEP (4.) det. EFF. PEAK RUNOFF PERIOD (7ΔD) = 7 ΔD = 7(.2428) = 1.70 hrs (1 hr 42 min)

STEP (5.) tab. Type RUNOFF DISTRIBUTION in table 1. [P_{24} = 1.9"; CN = 60; Q = .0443"]

TIME (hrs)	P_x/P_{24} (col 1)	× 1.9 = mass P	mass Q (col 3)	(CN 76)
11.5	.283	.5377	0	0
11.75	.387	.7353	.005	.0033
12.0	.663	1.2597	.010	.1040
12.5	.735	1.3965	.016	.1489
13.0	.772	1.4668	.023	.1744
13.5	.801	1.5219	.028	.1941
14.0	.819	1.5561	.034	
14.5	.838	1.5922	.042	
15.0	.853	1.6207	.051	

STEP (6.) det WORKING CURVE – P_B = 11.88 − 4.5(.2428) = 10.8 hrs; P_E = 11.88 + 7(.2428) = 13.6 hrs

STEP (7.) det INSTANT. PEAK DISCH.

Peak Rate of Discharge (q_p) = (KAQ)/T_p where A = area; Q = runoff; K = constant; T_p = time to peak

& T_p = D/2 + L = $\frac{24\text{ hr storm}}{2}$ + .607 = 12.607

so q_p = 484(95.5).0443/12.607 = 162.4 cfs.

$$\Delta q_p = \frac{484\,A(\Delta Q)}{\frac{\Delta D}{2}+L} = \frac{484(.1492)\,\Delta Q}{\frac{.2428}{2}+.607} = \underline{99.14\,\Delta Q}$$

KSC/SUNNYSIDE MINES
ACT/007/007
J.S. Huefner, PE

CALC. SHT. (Cont.)

SHT 2
5-25-82

CS. REF. SED. POND

STEP (8) cont. PLOT WORKING CURVE.

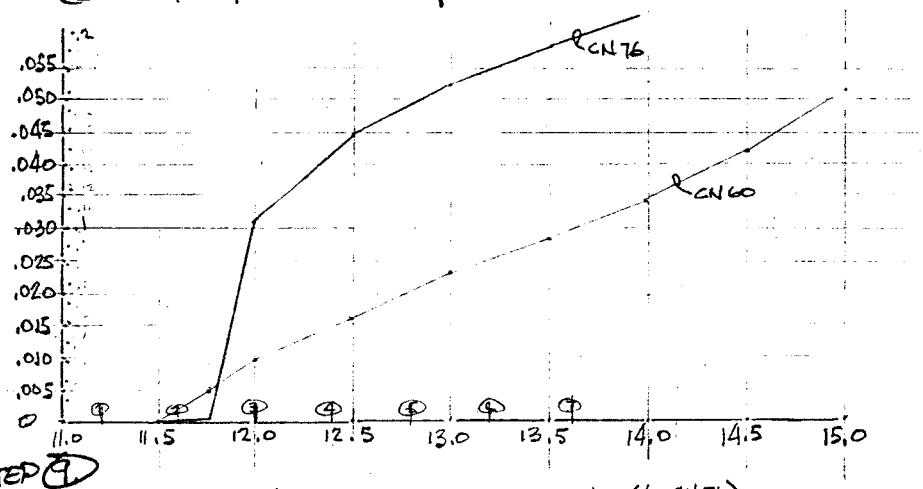

STEP (9)

TABLE:

← (for CN 76) →

INCREMENT	TIME	fig 1 Px/P24 ×1.9 =	mass P	mass Q	ΔQ ×99.14 =	Δq	Y	Y(ΔQ)	
	10.8	.222	.4218	—					
ΔD_1	11.2	.250	.4750	—	—		.2		
ΔD_2	11.6	.322	.6118	.0020 (.0108)	.002 (.0108)	.198 (1.07)	.4	.08	(0.43)
ΔD_3	12.0	.651	1.2369	.0095 (.104)	.0075 (.0932)	.744 (9.24)	.6	.45	(5.54)
ΔD_4	12.4	.722	1.3718	.0148 (.140)	.0053 (.036)	.525 (3.57)	.8	.42	(2.86)
ΔD_5	12.8	.766	1.4554	.0202 (.1634)	.0054 (.023)	.535 (2.28)	1.0	.54	(2.28)
ΔD_6	13.2	.783	1.4887	.0251 (.1815)	.0049 (.0185)	.486 (1.83)	.67	.33	(1.23)
ΔD_7	13.6	.804	1.5276	.0299 (.1970)	.0048 (.0155)	.476 (1.54)	.33	.16	(0.51)

* USE q_p = $\boxed{12.85}$ cfs.
q_p from ES-1027 Mod slp. CN75 = 13.5 cfs.

1.98 cfs (12.85 cfs)
AMC-I: 2.0 cfs max AMC-II: 13c

SED. PROD. EST. – USLE: A = RKLSCP

Rainfall Factor (R) = 18 from fig 1 (MT-0-23697) EPA-908/4-77-005 Publ [adj. on div. Line].
Soil Erodibility Factor (K) = .20 wt'd avg. from appendix A of EPA Publ.
Slope Gradient Factor (LS) = $(\frac{\lambda}{a})^{.5}(430x^2 + 30x + .43/6.57415)$ where $\lambda = 2000'$; $\theta = \tan^{-1}.16$; $x = \sin\theta$
$LS = (2000/95.5)^{.5}(430[\sin(\tan^{-1}.16)]^2 + 30\sin(\tan^{-1}.16) + .43/6.57415) = 11.07$
Crop Factor (C) = .36 Est from Table 4
Erosion Control Practice (P) = .90 Est from ditches, depressions, grade chg's.
∴ A = 18(.20)11.07(.36).90 = 12.91 T/ac/yr × 95.5 ac = 1233 Tons/yr

MOD. UNIV. SOIL LOSS EQ (MUSLE): $Y = 95(Qq_p)^{.56}$ KLSCP – sed. Yield per storm.
so $Y = 95(.0443 \times 12.85)^{.56} \times .20(11.07).36(.90) = 49.7$ TONS per event.

DET. SEDIMENT POND SIZE.

RUNOFF = .0443" = .352 af = 15,348 CF
SED YIELD = 49.7 T × $\frac{2000\ \#/T}{100\ pcf}$ = 994 CF × 2 Safety Factor = 1988

MIN POND SIZE = 17,336 CF

DES. POND @ 18,000 CF
∴ POND 5'd × 30'w × 120'l
or 5'd × 40'w × 90'l
5'd × 45'w × 80'l.
w/ 1.5:1 side slopes.

KSC/SUNNYSIDE MINES
ACT/007/007
J.S. Huefner, PE. JSH

C.S. REF. SED. POND (cont.)

POND SIZE & PLAN

SUMMARY: P = 1.9" for 10 yr 24 hr storm.
Q = 0.0443" = 0.352 af = 15,350 cf.
qp = 12.85 cfs
Y (MUSLE) = 49.7 Tons.

SO: RUNOFF = 15,350 CF
SEDIMENT = 1990 CF
TOTAL 17,340 CF DES for 18,000 CF.

set for SITE: 5'd x 45'w x 80'l = 18,000 CF (OK)

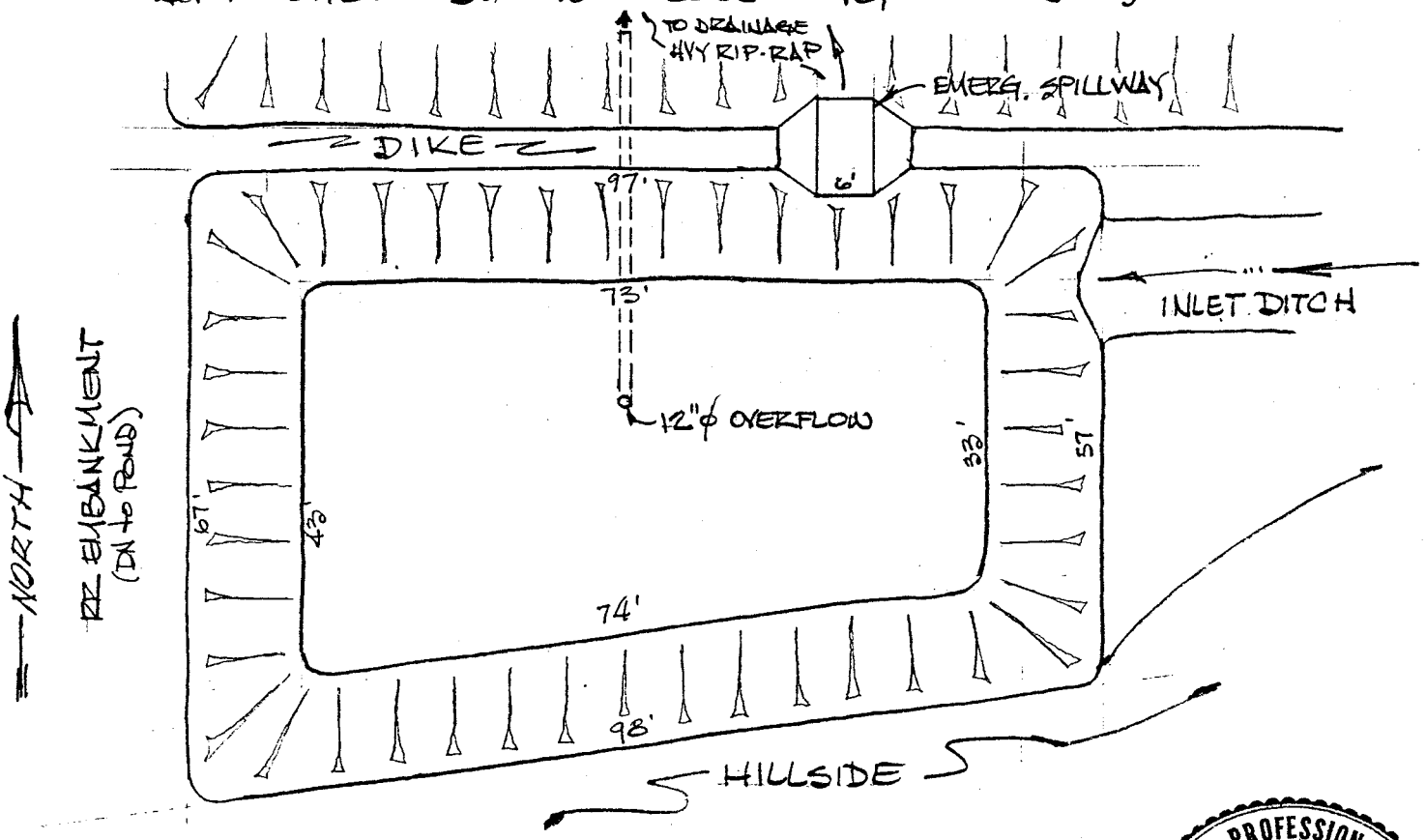

PLAN

Scale: 1" = 20'

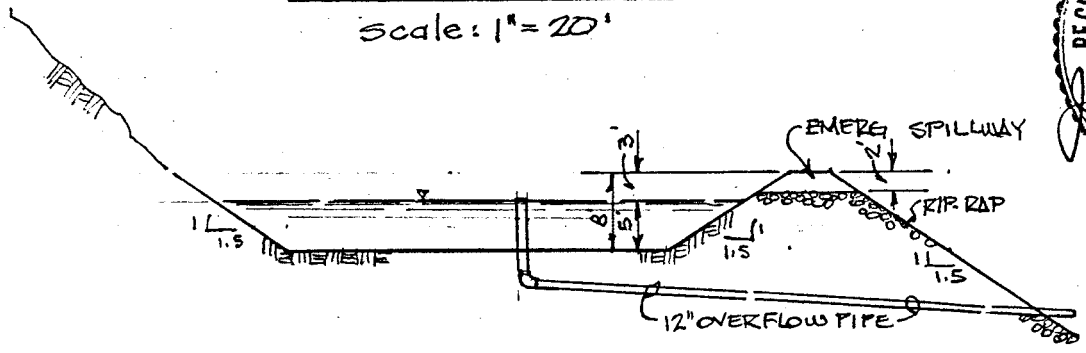

SECTION

REGISTERED PROFESSIONAL ENGINEER
No. 3250
JOHN S. HUEBNER
STATE OF UTAH

KSC/SUNNYSIDE MINES
ACT/007/007

CS. REF. SED. POND

SURFACE DRAINAGE AREA.
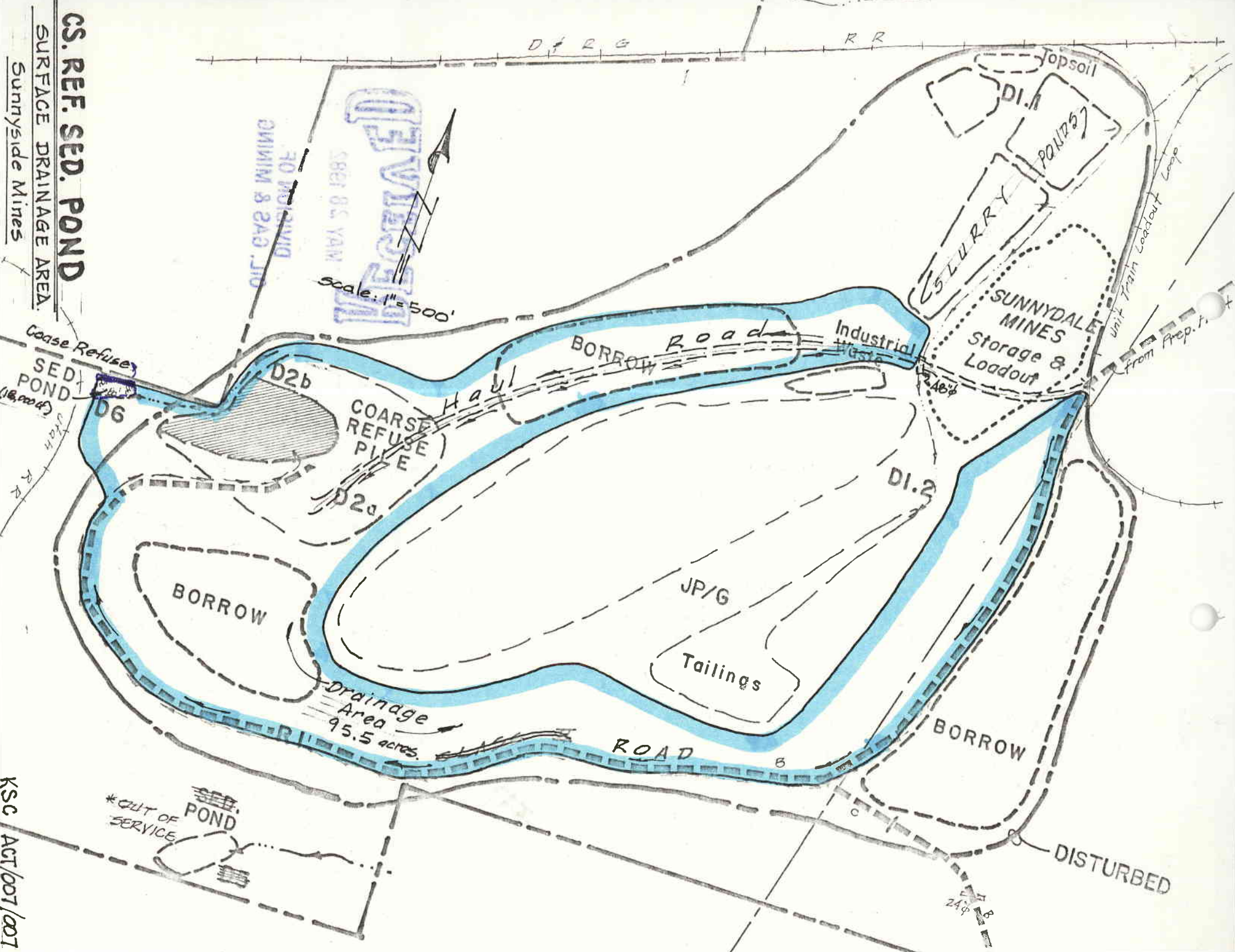
Sunnyside Mines