CASTLE VALLEY

TECHNICAL SERVICES

Evaluation report of Portals & Shafts of the Kaiser Steel and Sunnyside Coal Mines

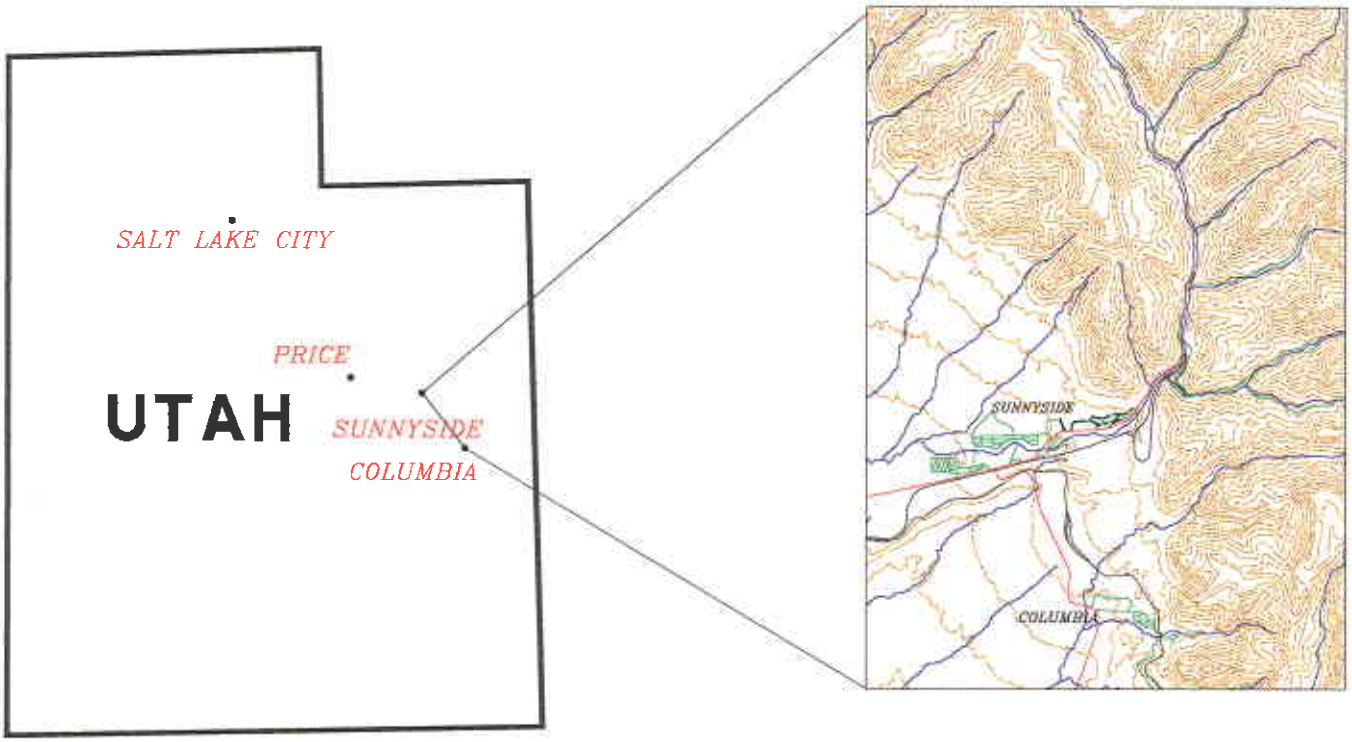

Arranged and compiled for:

MONTGOMERY WATSON

September 1997

Castle Valley Services

PO Box 922 • Price, Utah 84501
Phone (801) 637-3557 • Phone (801) 637-9300
Fax (801) 637-3593 • Fax (801) 637-2833

INTRODUCTION

Sunnyside Mine Reclamation Project

Sunnyside Coal Company's Sunnyside Mine located in Carbon County, Utah has been in existence since the turn of the century. The Sunnyside Mine is an underground longwall mine located in the Book Cliffs Coal fields about 140 miles southeast of Salt Lake City. The permit area encompasses approximately 11,350 acres. The actual surface disturbance within the permit area is approximately 130 acres.

The objective of this task is to provide accurate and detailed information sufficient to accomplish engineering and design for the Sunnyside Mine Reclamation Project.

3595 So. Highland Dr.
Unit 4
Las Vegas, NV 89102
(702) 876-5955
FAX (702) 876-9509

P.O. Box 5307
951 Alpine Drive
Elko, NV 89801
(702) 778-0477
FAX (702) 778-0520

5475 Peoria St.
Bldg 2, Units I & J
Denver, CO 80239
(303) 373-5070
FAX (303) 373-5099

P.O. Box 1178
719 2nd Street
Paonia, CO 81428
(970) 527-3151
FAX (970) 527-6846

P.O. Box 539
110 North Main
Lyman, WY 82937
(307) 787-3304
FAX (307) 787-3245

SUNNYSIDE MINE RECLAMATION PROJECT
PORTAL EVALUATION AND INSPECTION

PORTAL #	OPEN (1) CLOSED	POTENTIAL (2) HAZARD	MITIGATION RECOMMENDATION	CLOSURE (3) EVALUATION
P-1	C (13')	C,D	Remove railroad tie access and clean surrounding area.	A
P-1A	C (BF)	S,D	Remove protruding rails and clean surrounding area.	A
P-1B	C (20')	S,D	Remove rails and loose objects and clean surrounding area.	A
P-1C	C (Flush)	L,S,G,D	Remove fanhousing, water bridge, pipe, seal, and grout air leaks.	
P-1C			Clean surrounding area	
P-2	C (18')	C,S,G,L	Reseal, grout, and backfill portal	M
P-3	NE	NE	NE	--
P-4	R	R	R	A
P-5	R	R	R	A
P-6	R	R	R	A
P-7	R	R	R	A
P-8	R	R	R	A
P-9	R	R	R	A
P-10	R	R	R	A
P-11	R	R	R	A
P-12	R	R	R	A
P-13	R	R	R	A
P-14	R	R	R	A
P-15	R	R	R	A
P-16	R	R	R	A
P-17	NE	NE	NE	--
P-18	C	NH		A
P-19	C	NH	Fill voids with earth and divert drainage.	A

(1) C = closed, O = open, (20) indicates depth of opening

(2) C = potential roof fall or structure collapses

S = sharp or protruding objects

G = potential for dangerous gases

L = air leakage

NH = no apparent hazards

D = debris

BF = backfill

(3) A = adequate for permanent closure

M = requires mitigate for permanent closure

(4) NE = no evidence

LE = little evidence

(5) R = reclaimed

SUNNYSIDE MINE RECLAMATION PROJECT
PORTAL EVALUATION AND INSPECTION

PORTAL #	OPEN (1) CLOSED	POTENTIAL (2) HAZARD	MITIGATION RECOMMENDATION	CLOSURE (3) EVALUATION
P-20	NE	NE		
P-20A	C (5')	NH		A
P-20B	C	NH		A
P-21	R	NE		--
P-22	C (BF)	C,S,L	Remove metal portal walls, backfill portal area, recontour	M
P-23	C (BF)	C,S,L	Remove metal portal walls, backfill portal area, recontour	M
P-24	LE	D	Remove debris and contour	A
P-25	NE	NH		A
P-26	C	C,D,S,L,G	Reopen, support, reseal, - remove debris,	M
P-26			Recontour - main integrity of county road	
P-27	LE,R	NH		A
P-28	C (25')	D, NH	Backfill - Recontour	A
P-29	C (25')	D, NH	Backfill - Recontour	A
P-30	C (BF)	D, NH	Backfill - Recontour	A
P-31	C (BF)	D,S	Demolition of concrete structures. Backfill - recontour	M
P-32	C (BF)	D	Demolition of concrete structures. Backfill - recontour	M
P-33	C (BF)	D, NH	Demolition of concrete structures. Backfill - recontour	M
P-34	C (BF)	S, D	Demolition of concrete structures. Backfill - recontour	M
P-35	O	C, G, L, D	Collapse and seal opening, recontour	M
P-36	C (80')	C	Collapse opening and contour	M
P-37	C (40')		Back fill to seal	A
P-38				
P-39				

(1) C = closed, O = open, (20) indicates depth of opening

(2) C = potential roof fall or structure collapses

S = sharp or protruding objects

G = potential for dangerous gases

L = air leakage

NH = no apparent hazards

D = debris

BF = backfill

(3) A = adequate for permanent closure

M = requires mitigate for permanent closure

(4) NE = no evidence

LE = little evidence

(5) R = reclaimed

SUNNYSIDE MINE RECLAMATION PROJECT
PORTAL EVALUATION AND INSPECTION

SHAFT #	OPEN (1) CLOSED	POTENTIAL (2) HAZARD	MITIGATION RECOMMENDATION	CLOSURE (3) EVALUATION
S-1	C		Cover and contour	A
S-2	C	G, L	Seal upper cap, cover, and contour	M
S-3	C		Cover and contour	A
S-4	C		Cover and contour	A
S-5	C		Cover and contour	A
S-6	C		Cover and contour	A
S-7	C		Cover and contour	A
S-8	C		Cover and contour	A
S-9	C	LE		A

(1) C = closed, O = open, (20) indicates depth of opening

(2) C = potential roof fall or structure collapses

S = sharp or protruding objects

G = potential for dangerous gases

L = air leakage

NH = no apparent hazards

D = debris

BF = backfill

(3) A = adequate for permanent closure

M = requires mitigate for permanent closure

(4) NE = no evidence

LE = little evidence

(5) R = reclaimed

Location	Portal No.	Photo Page	Portal Description	Comments and Remarks
Columbia Bleeders	P1	1	Portal is made of concrete with a 8 by 12' wide opening. Portal is sealed (Sept. 1990) with no obvious openings or voids. Seal is made of concrete block with grout. Seal is approximately 13' inby portal opening. There is no air movement into or out of the mine portal. Opening is screened and secured.	This portal appears to be a Columbia Mine portal as indicated by local residents.
Columbia Bleeders	P1A	2	Evidence of a portal location exists next to an old tramway approximately 300' west of Portal P1. Portal area is located on south side tram. Old tracks are protruding from sloughage and power poles are located on top of 30' high wall. Portal appears to be tightly backfilled. No obvious openings or voids.	This portal appears to be a Columbia Mine portal as indicated by local residents.
Columbia Bleeders	P1B	3	This is an old portal, 9' wide by 5' high, made of wood tie supports both roof and sides. It is sealed ~ 20' back and has caved from the portal opening 14' back. Opening is ~ 20' from a 60' ledge. This portal is located 50' to 60' higher than and approximately 100' south of Portal P1. Portal opening is located on the north facing slope.	This portal is not very accessible. **Caution** needs to be taken when working around this portal, due to the steepness of the slope and vertical ledges. Any work needs to be hand done. This portal appears to be a Columbia Mine portal as indicated by local residents.
Columbia Bleeders	P1C	4 4A 5	This portal is located above and to the south of portal P1. This portal appears to be a fan portal with rock and grouted walls and concrete roof. A rectangular opening with metal side walls extends through the top. There appears to be three separate openings which first enter the concrete and rock structure. This structure is 56' long by 12' high by 30' wide with a 12' high rock retaining wall above the concrete roof. All openings are sealed at the face of the rock structure. Air movement flowing out of vertical opening is significant. Even though the vertical opening has been back filled, there are significant voids and air movement is obvious. This allows three to four feet per second of air to flow in and out of the portal. Gases appear to be nontoxic, and oxygen appears to be of sufficient quantity. The void is 6' wide and averages 6" high. There is significant ground relief behind the rock retaining wall indicating that caving has occurred to the immediate portal opening and area.	Due to steepness, remoteness, and accessability, reclamation would be difficult. Some dismantling and cleanup could be done. Rock work blends in with ledges. **Caution** needs to be taken when working around this portal, due to the steepness of the slope and vertical ledges. Air movement through vertical opening also reverses and could expel toxic or flammable gases. Rock structure is on the edge of 50 - 60' rock ledge. This portal appears to be a Columbia Mine portal as indicated by local residents.

Location	Portal No.	Photo Page	Portal Description	Comments and Remarks
Columbia Bleeders No. 2 Mine	P2	5 6	This portal is constructed of a steel type arched support 16' wide by 8' high with steel mat skin. Some skin is corroded and has deteriorated exposing the existing steel arched support. A block seal is constructed 18' from portal opening. A 2" test pipe and valve has been installed in the seal. Although there is no obvious air movement, there is obvious leakage. The musty smell of mine air dictates leakage to the outside. Atmospheric testing at the seal reveals: 1. O2 = 19.5% 2. CO = 0.0% 3. CH4 = 0.0%	Portal is very remote. Access is difficult. Any work being done would be by hand. **Caution** needs to be used while working in and around this portal. Mine atmosphere does leak through to the outside. Side slopes are steep and ledges are 50 to 60' high.
Columbia Bleeders No. 2 Mine	P3		It appears that portal P3 does not exist as indicated by local residents and field search. After searching for this portal, no evidence was found to suggest that portal P3 exists.	
Fan Canyon Portals Right Fork No. 2 Mine	P4 - P6		Portal area has been resloped and reclaimed. The area has been reseeded. No evidence exists of portal openings.	
Water Canyon Portals Left Fork No. 2 Mine	P7 - P16	7	Portal area has been resloped and reclaimed. The area has been reseeded. No evidence exists of portal openings.	
Fowler Portal No. 2 Mine	P17		After an intensive search accompanied by DOGM personnel, no evidence of a Fowler Portal was found. Local residents were unsure of the existence of portal P17.	
No. 2 Canyon Portals No. 2 Mine	P18	8 9	Portal P18 is made of approximately 12" thick rock and grouted wall, 21' high by 9' wide. The opening is 20' wide by 8' high. Rock wingwalls extend from both sides approximately 50'. Portal is backfilled with earth. A high wall exists above the portal, approximately 20' high. An access road runs across the top of the portal, approximately 15' wide. There are no obvious openings or voids within the portal area.	Portal area is accessible and is located in No. 2 Canyon.
No. 2 Canyon Portals No. 2 Mine	P19	9 10	There is very little evidence of this portal. There is some fill and surface relief. A rock retaining wall exists above the portal. Sloughage has occurred behind this retaining wall suggesting that caving has occurred to the immediate opening of portal P19. There are two voids above the rock wall between the rock and upper metal plating. These voids are approximately 10" by 10" with no evidence of air movement.	Portal area is accessible and is located in No. 2 Canyon.

Location	Portal No.	Photo Page	Portal Description	Comments and Remarks
No. 2 Canyon Portals No. 2 Mine	P20	11	Unable to locate this portal within the area shown on the map. This suggests that the portal has been sealed and buried as reflected by the photograph.	
No. 2 Canyon Portals No. 2 Mine	P20A	12 13	This portal is an old portal, sloughed in and sealed with earth. Side walls are made of rock with wooden timber beams. This portal could be of late 1800's to early 1900's era. It is located east of portals P18 and P19. It would be located due south from portal P20. Rock sidewalls are 5' high and extend 20 to 50' on each side of the portal. It appears there are no holes or voids which could allow air movement.	This portal is not located within the present disturbed boundary limits. It is accessible.
No. 2 Canyon Portals No. 2 Mine	P20B	13	This portal is east approximately 80' from portal P20A. It is evidenced by sloughage and ground relief. There is some evidence of rock work which has sloughed around the portal area. A 5' high wall continues east and west approximately 40' each way. This portal could be of late 1800's to early 1900's era.	This portal is not located within the present disturbed boundary limits. It is accessible.
No. 2 Canyon Portals No. 2 Mine	P21	11	Evidence suggests that portal area has been resloped, recontoured, and reclaimed. There is no physical evidence of the portal area in regards to openings, highwalls, sloughage, etc.	
No. 3 Slope Portals, No. 1 Mine	P22 P23	14	These twin portals are tied together at the mouth by one opening as suggested by photographs on page 14 One portal apparently was the main belt line while the other portal was an off chute to the main belt line. These portals were constructed with corrugated metal and earthen fill. Retaining walls were constructed of wood blocking and metal siding. Portal opening was 10' wide by 9' high and has been sealed and back filled. There are no obvious holes, voids, or air movement. An 8' high wall exists directly east of the portal opening.	This portal is accessible. The depth and length of the immediate portals is unknown, therefore caution needs to be taken during reclamation.
No. 3 Slope Portals, No. 1 Mine	P24	15	There is very little evidence of this portal location. The ground has been relandscaped to accommodate the latest operation. Evidence consists of some ground relief and some wood within the area respective to the map.	

Location	Portal No.	Photo Page	Portal Description	Comments and Remarks
No. 3 Slope Portals No. 1 Mile	P25	16	No evidence of portal location, ground has been contoured to accommodate latest operation.	
No. 1 Slope Rock Tunnel No. 1 Mine	P26	16 17	This portal extends under the existing county road. The opening is constructed of a concrete headwall and concrete wingwalls. The opening is 19' wide by 7' high and is backfilled with earth. A void exists across the top 2 to 4" allowing significant air movement from the mine opening. Atmospheric testing reveals: 1. O2 = 17% 2. CO = 20PPM 3. CH4 = 0%	**Careful/Caution** Air movement is irregular and can reverse, this could force toxic or flammable gases within and around the immediate area of the portal. The existing bridge allowing access to this portal is in need of repair. Many holes and voids exist causing hazards. It has been suggested that this portal be reopened and extra support be added under the county road. This would entail a complex process using schedule 31 equipment, mine rescue apparatus and equipment, and reventilation. Supervision of experienced and certified person is necessary.
Slaughter Canyon Portal	P27	17 18	Slaughter Canyon has been reclaimed including road, pads, building, etc. Highwall matting (chain link) suggests portal area. Reclaim grasses have developed well along with native vegetation within the reclaimed area.	
Outcrop Fan Portal No. 1 Mine Fan Canyon	P28 P29	19 20	Twin portals are constructed in concrete both with 12' high by 14' wide openings. Block and grouted seals have been constructed approximately 25' inby portal openings, both openings have then been backfilled with earth. Immediate portals have been constructed of 12" thick by 14' 6" high by 67' long concrete wall. Each portal is constructed of concrete 25' long to the base of a 30 to 50' highwall. High walls also exist on both sides. There are no obvious voids or openings in the block seals. The backfill is <u>not</u> tight to the roof.	These portals are accessible by an access road in Fan Canyon. Concrete portals are exposed behind the retaining wall. **Caution** needs to be taken during reclamation not to allow any intrusion behind the block seals from the outside.
Outcrop Fan Portal No. 1 Mine	P30	20 21	This portal is composed of concrete 14' high by 18' long 6' from a 20' highwall. The opening itself is 10' high by 14' wide. The portal has been backfilled with earth. There are some voids and openings along the top of the backfill but no air movement is evident. This suggests that a block seal is inby the backfill.	Concrete portals are exposed. **Caution** needs to be taken during reclamation not to allow any intrusion behind the block seals from the outside.

Location	Portal No.	Photo Page	Portal Description	Comments and Remarks
Outcrop Fan Portal No. 1 Mine	P31	21 22	This portal is one of two fan portals. It is the southern most fan portal. The fan itself has been removed. The portal is constructed of a concrete fan house 24' long by 13'6" wide by 12'6" high, with walls 12" thick. The portal opening is 14'6" wide by approximately 10' high. There is a 30' highwall back from the fan house. The portal itself has been backfilled with earth. The corners of the backfill shows voids. There is no air movement, indicating the entry has been sealed inby.	This portal is accessible by an access road in Fan Canyon. Care should be taken during demolition to guarantee seal integrity.
Outcrop Fan Portal No. 1 Mine	P32	23	This portal is one of two fan portals. It is the northern most fan portal. The fan itself has been removed. The portal is constructed of a concrete fan house 24' long by 13'6" wide by 12'6" high, with walls 12" thick. The portal opening is 14'6" wide by approximately 10' high. There is a 30' highwall back from the fan house. The portal itself has been backfilled with earth. The corners of the backfill shows voids. There is no air movement, indicating the entry has been sealed inby.	This portal is accessible by an access road in Fan Canyon. Care should be taken during demolition to guarantee seal integrity.
Outcrop Fan Portal No. 1 Mine Portal Fan Canyon	P33	24	Immediate portal is of concrete construction 13' high by 20' wide by 9' long. Portal opening is 14' wide by 10' high. The coal seam is exposed on each side of the portal and voids are common immediately behind concrete structure. Portal opening is backfilled with voids along the top and corners of the roof. No air movement is noted suggesting that the entry is sealed.	This portal is accessible by an access road in Fan Canyon. Care should be taken during demolition to guarantee seal integrity.
Outcrop Fan Portal No. 1 Mine Fan Canyon	P34	25	This portal is a small portal of concrete construction 7' 6" high by 9' 4" wide approximately 6' long. Behind the concrete structure wooden supports have collapsed. These wooden structures supported the immediate roof as the entry descends underground. Two wingwalls 30" high by 6' long by 8 ½" wide extend from the opening. The opening itself is 7' high by 8' wide. No air movement has been noted even though some voids exist, suggesting that the entry is sealed.	This portal is accessible by an access road but sets along a ledge area in Fan Canyon. Care should be taken during demolition to guarantee seal integrity. **Caution** should be taken while working around the portal area.
Inside Raise Portal	P35	26	This portal is located on the east facing slope of Fan Canyon approximately 2,000' south of portal P34. The original portal opening has caved back approximately 30' leaving a 15' high wall and respective sides. The portal is open and allows air movement in and out of the mine. Atmospheric testing reveals: 1. O2 = 20.0% 2. CO = 0.0% 3. CH4 = 0.0% The roof of the entry is made up of various layers of siltstones and clays with varved carbonaceous material and sandstone at the immediate roof. A larger sandstone member exists approximately 10' above the roof. The opening is approximately 7' high by 8' wide. There are no outside structures or foundations.	Accessability to this portal is difficult. All work on this portal should be hand done. **Caution** needs to be taken while working around the portal area. Side slopes are steep and the opening itself is unstable and has the potential to collapse. Air movement is irregular and can reverse. This could force toxic and/or flammable gases to accumulate within and around the immediate area.

Location	Portal No.	Photo Page	Portal Description	Comments and Remarks
Inside Raise Portal	P36	27	This portal is located on the west facing slope in the head of the right fork of an unnamed canyon adjacent to and west of Fan Canyon. This portal is constructed of wooden timbers and props which extend approximately 5' from the hillside. The portal opening is approximately 8' wide by 6' high. An apparent seal is located approximately 80' from the mouth. The roof is constructed of 4 by 8 wooden caps and sides are supported by wooden timber. The seal appears to be block type with a Celtite foam covering. There is minimum air movement. Atmospheric testing reveals: 1. O2 = 19.5% 2. CO = 0.0% 3. CH4 = 0.0% Portal opening is screened and dangered off.	This portal is very remote. No real access exists other than by foot. There is very little evidence of a portal other than the opening itself. **Care** should be taken while working around this portal. Steep slopes and vertical ledges presents a hazard to personnel.
Inside Raise Portal No. 1 Mine	P37	28	This portal is located on the east facing slope in the head of the right fork of an unnamed canyon adjacent to and west of Fan Canyon. It is directly west of portal P36. This portal is constructed of a steel type arched support 17' wide by 9' high with wooden covering. This portal extends 12' from the hillside. A block seal has been constructed approximately 40' inside the portal. There is no air movement into or out of the portal. This portal is located on a ledged outcrop of rock approximately 30' to 40' high.	This portal is very remote. No real access exists other than by foot. **Care** should be taken while working around this portal. Steep slopes and vertical ledges presents a hazard to personnel.
B Canyon Portal	P38 or P39	29	This portal is located up B Canyon, it is a single portal which accesses two entries underground. This portal is of steel arched construction with sheet metal covering. It is faced with sheet metal and metal screen. The door has been removed but is still attached to the face by a chain and lock. Portal opening is 16' wide by 8' high. Steel arches are on 3' on center. A block seal with mortar face is located inby the portal opening. There is no obvious air movement, no openings nor voids. There is a 30' by 30' earthen pad immediately in front of the portal opening. A 40' long by 30' wide berm exists above the entry.	This portal is accessible by the use of B Canyon road. Care should be taken during demolition to ensure integrity. There is pressure against the inside of the seal as demonstrated when the test valve was opened. Only one portal exists as indicated by residences and veteran miners.
Shop Fan Shaft	S1	30	This shaft is located due south of the main shop. It is well capped with concrete and steel. The cap is 20' by 20' square, framed in 6" by 8" steel beam with 8" concrete. There are no obvious voids or openings, air flow is not evident.	Shaft is well sealed. However, care should be taken during reclamation to maintain the integrity of this seal.

Location	Shaft No.	Photo Page	Shaft Description	Comments and Remarks
Shop Fan Shaft	S1	30	This shaft is located due south of the main shop. It is well capped with concrete and steel. The cap is 20' by 20' square, framed in 6" by 8" steel beam with 8" concrete. There are no obvious voids or openings, air flow is not evident.	Shaft is well sealed. However, care should be taken during reclamation to maintain the integrity of this seal.
No. 2 Canyon Shaft	S2	31 32	This shaft is located to the head of #2 Canyon. It is sealed with a concrete cap 16'4" by 15' by 9" thick. The surface of the concrete has no integrity and is corroding. It appears that a 9' diameter by 7" concrete slab has been placed on the existing cap due to voids and openings in the initial concrete. This 9' diameter slab has been grouted to the existing cap but has failed leaving multiple voids and openings where air movement is noted. Atmospheric testing at these locations shows: 1. O2 = 20.9% 2. CO = 0.0% 3. CH4 = 0.0% A 20' highwall exists to the south of the shaft.	This shaft is accessible by the use of the #2 Canyon road. This shaft has voids and openings and air movement is continual. This could allow toxic and/or flammable gases to escape. **Caution** needs to be taken while working around the shaft area.
Whitmore Canyon Shaft	S3	33	This shaft is located in Whitmore Canyon just north of the intersection with Pole Canyon. It is well capped with concrete and steel. The cap is 20' by 20' square, framed in 6" by 8" steel beam with 8" concrete. There are no obvious voids or openings, air flow is not evident.	This shaft is accessible by the Whitmore Canyon road. Shaft is well sealed. However, care should be taken during reclamation to maintain the integrity of this seal.
Whitmore Canyon Shaft	S4	34	This shaft is located north of shaft #3 in Whitmore Canyon. It is well capped with concrete and steel. The cap is 20' by 20' square, framed in 6" by 8" steel beam with 8" concrete. There are no obvious voids or openings, air flow is not evident.	This shaft is accessible by the Whitmore Canyon road. Shaft is well sealed. However, care should be taken during reclamation to maintain the integrity of this seal.
Pole Canyon Shaft	S5	34 35	This shaft is located up Pole Canyon. This shaft is sealed with 12' by 11' by 6" concrete cap framed in 6" by 6" steel beam. A 30+' highwall exists to the south side of the concrete cap. There are no obvious voids or openings, air movement was not noted.	This shaft is accessible by the Pole Canyon road. Shaft is well sealed. However, care should be taken during reclamation to maintain the integrity of this seal.
Manshaft	S6	35 36	This shaft is located at the upper bathhouse area in Whitmore Canyon. It is south of the upper bathhouse and is well sealed. The seal is 9'6" by 9'10" by 6" thick concrete cap framed with 2" by 6" steel channel. The shaft is surrounded by old ventilation piping, electrical building, and other structures. There are no obvious voids or openings, and leakage is not noted.	This shaft is accessible by the Whitmore Canyon road. Shaft is well sealed. However, care should be taken during reclamation to maintain the integrity of this seal.

Location	Shaft No.	Photo Page	Shaft Description	Comments and Remarks
Twinshafts	S7 S8	36 37	These shafts are located on the upper pad above the upper bathhouse. Both shafts are well capped. Both caps are 8'4" by 8'4" by 6" concrete, framed with 2" by 6" steel channel. Caps are 8'6" apart. Protecting these shafts, there exists a coalcar retaining wall. Behind that is a 30' to 40' highwall. There are no obvious voids or openings in either seal, and no leakage is noted.	This shaft is accessible by the Whitmore Canyon road. Shaft is well sealed. However, care should be taken during reclamation to maintain the integrity of this seal. Because of possible heavy equipment use next to the highwall and over the seals, it may be advisable to add support.
Outcrop Shaft Fan Canyon	S9	38	This shaft is located at the head of Fan Canyon. Little evidence exists of the actual shaft, but earthen depression and excavation suggests that this shaft has been filled and sealed.	This shaft is accessible from the Fan Canyon road.

COLUMBIA BLEEDERS
P1

COLUMBIA BLEEDERS
P1

COLUMBIA BLEEDERS
P1A

COLUMBIA BLEEDERS
P1A

COLUMBIA BLEEDERS
P1B

COLUMBIA BLEEDERS
P1B

COLUMBIA BLEEDER P1C - FAN HOUSING - SHOWING SQUIRREL CAGE FAN WITH ADJUSTABLE GATES
NOTICE OPENING

COLUMBIA BLEEDER - ADJUSTABLE GATE FOR FAN
P1C

COLUMBIA BLEEDERS - ROCK STRUCTURE LOCATED AT END OF PIPLINE
P1C WHICH RUNS UP THE CLIFF

COLUMBIA BLEEDERS
P1C

COLUMBIA BLEEDER - GROUND RELIEF SUGGESTING ENTRY COLLAPSE
P1C

COLUMBIA BLEEDER - LOOKING NORTH, ENTRY RUNS LEFT TO RIGHT
NO. 2 MINE ALSO CALLED "ESCAPEWAY PORTAL"
P2

COLUMBIA BLEEDER - NOTICE STEEL ARCHING AND MATTING
NO. 2 MINE
P2

COLUMBIA BLEEDER - NOTICE BLOCK SEAL WITH NO MORTARED JOINT
NO. 2 MINE
P2

WATER CANYON PORTALS - RECLAIMED: LOOKING WEST
P7 - P16

WATER CANYON PORTALS - RECLAIMED: LOOKING EAST
P7 - P16

NO. 2 CANYON PORTALS - LOOKING SOUTH
NO. 2 MINE
P18

NO. 2 CANYON PORTALS - LOOKING SOUTH
NO. 2 MINE
P18

NO. 2 CANYON PORTALS - P18: ~~LEFT~~ RIGHT, IDENTIFIED BY SLOUGHED AREA
NO. 2 MINE P19: ~~RIGHT~~ LEFT, IDENTIFIED BY ROCKWALL
P18 & P19

NO. 2 CANYON PORTALS - IDENTIFIED BY ROCKWALL AND SLOUGHED
NO. 2 MINE SLOPE
P19

NO. 2 MINE PORTALS
NO. 2 MINE
P19
ROCK WALL
ABOVE PORTAL

NO. 2 MINE PORTALS
NO. 2 MINE
P19
SLOUGHED AREA
BEHIND ROCK WALL

NO. 2 CANYON PORTALS - NO EVIDENCE OF PORTAL WITHIN AREA AS
NO. 2 MINE REFLECTED ON MAP
P20

NO. 2 CANYON PORTALS - EVIDENCE REFLECTS RECLAMATION
NO. 2 MINE
P21

NO. 2 CANYON PORTALS - OLD PORTAL LATE 1800'S EARLY 1900'S
P20 A

NO. 2 CANYON
P20 A

NO. 2 CANYON PORTALS - LEFT P20 B
P20 A & P20 B RIGHT P20 A

NO. 2 CANYON PORTALS
P20 B

NO. 3 SLOPE PORTALS - LITTLE EVIDENCE OF ANY PORTAL
NO. 1 MINE
P24

NO. 3 SLOPE PORTALS
NO. 1 MINE
P24

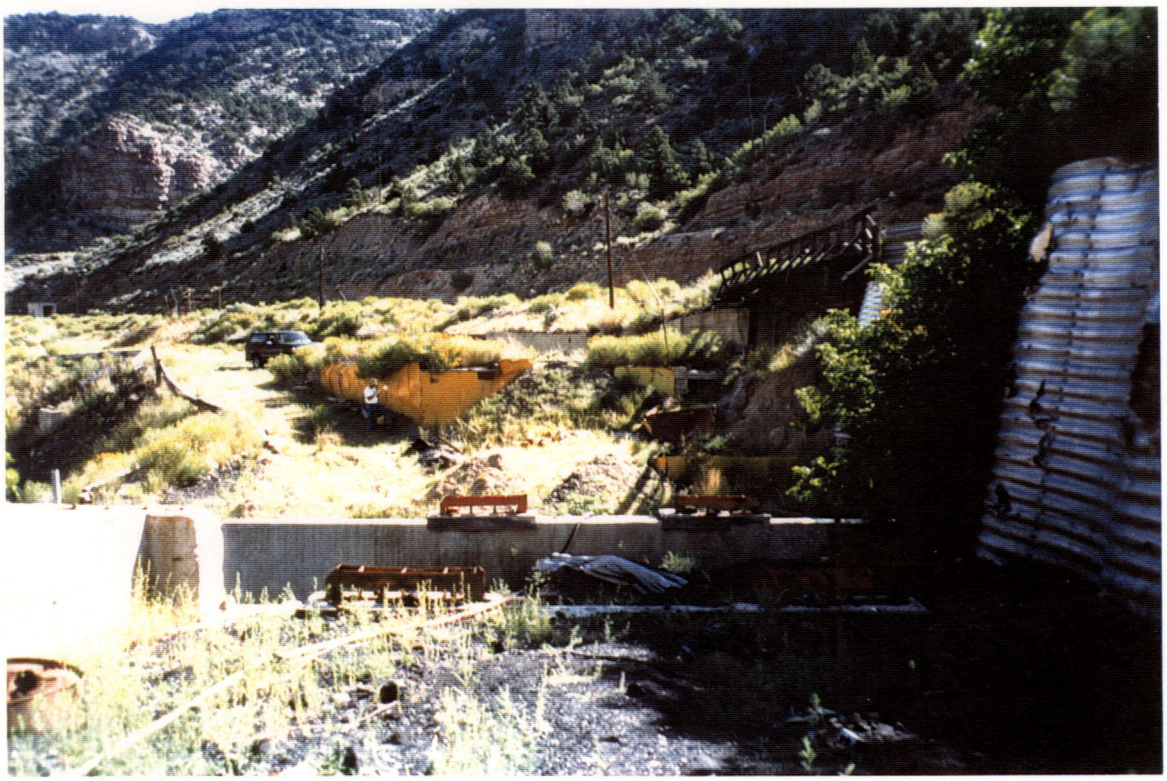

NO. 3 SLOPE PORTALS - ONE PORTAL FOR TWO ENTRIES
NO. 1 MINE
P22 & P23

NO. 3 SLOPE PORTALS
NO. 1 MINE
P22 & P23

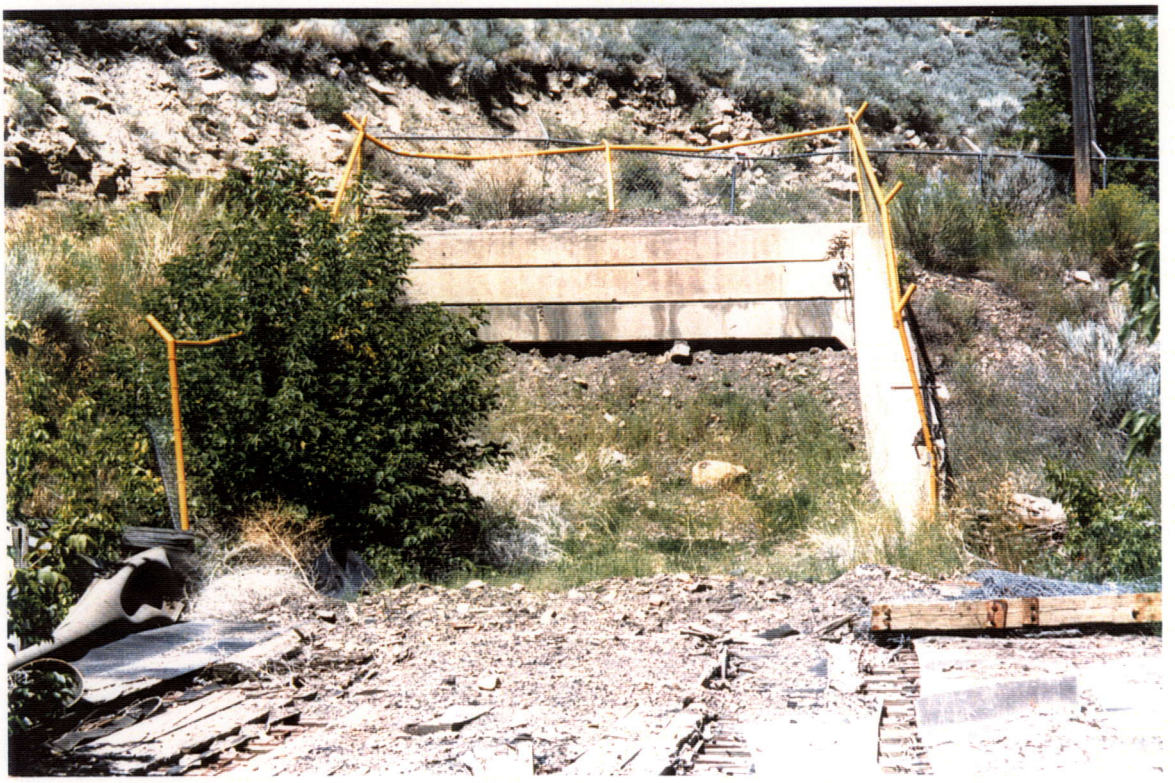

NO. 1 SLOPE
ROCK TUNNEL
NO. 1 MINE
P26

SLAUGHTER CANYON PORTAL - EVIDENCE OF PORTAL AREA
P27

NO. 3 SLOPE PORTALS - NO EVIDENCE OF PORTAL
NO. 1 MINE
P25

P 25

NO. 1 SLOPE - PORTAL RUNS UNDER PUBLIC ROAD
ROCK TUNNEL
NO. 1 MINE
P26

SLAUGHTER CANYON PORTAL - LOOKING DOWN CANYON
P27

SLAUGHTER CANYON PORTAL - LOOKING UP CANYON
P27

OUTCROP FAN PORTALS - LEFT P29
NO. 1 MINE RIGHT P28
P28 & P29

OUTCROP FAN PORTALS
NO. 1 MINE
P28

OUTCROP FAN PORTALS
NO. 1 MINE
P29

OUTCROP FAN PORTALS
NO. 1 MINE
P30

OUTCROP FAN PORTALS
NO. 1 MINE
P30

OUTCROP FAN PORTALS - TWIN FAN: SOUTH FAN
NO. 1 MINE
P31

OUTCROP FAN PORTALS
NO. 1 MINE
P31

OUTCROP FAN PORTALS
NO. 1 MINE
P31

OUTCROP FAN PORTALS - TWIN FAN: NORTH FAN
NO. 1 MINE
P32

OUTCROP FAN PORTALS
NO. 1 MINE
P32

OUTCROP FAN PORTALS
NO. 1 MINE
P33

OUTCROP FAN PORTALS
NO. 1 MINE
P33

OUTCROP FAN PORTALS
NO. 1 MINE
P34

OUTCROP FAN PORTALS
NO. 1 MINE
P34

INSIDE RAISE PORTAL
P35
LOOKING INSIDE PORTAL

INSIDE RAISE PORTAL
P35
PORTAL IS OPEN
ACCESS IS DIFFICULT

INSIDE RAISE PORTAL - PORTAL IS REMOTE AND ACCESS IS DIFFICULT
P36

INSIDE RAISE PORTAL
P36

INSIDE RAISE PORTAL - PORTAL IS REMOTE AND ACCESS IS DIFFICULT
P37

INSIDE RAISE PORTAL
P37

B CANYON PORTAL - ONE PORTAL CONNECTS TWO ENTRIES
P38 OR P39

B CANYON PORTAL
P38 OR P39

SHOP FAN SHAFT
S1

SHOP FAN SHAFT
S1

NO. 2 CANYON SHAFT
S2

NO. 2 CANYON SHAFT
S2

NO. 2 CANYON SHAFT
S2

NO. 2 CANYON SHAFT
S2

WHITMORE CANYON SHAFT
S3

WHITMORE CANYON SHAFT
S3

WHITMORE CANYON SHAFT
S4

POLE CANYON SHAFT
S5

POLE CANYON SHAFT - SHAFTS SEALED (LEFT)
S5

MANSHAFT
S6

MANSHAFT
S6

TWIN SHAFT
S7 & S8

TWIN SHAFTS
S7 & S8

TWIN SHAFTS
S7 & S8

OUTCROP SHAFT
FAN CANYON
S9

OUTCROP SHAFT
FAN CANYON
S9

AMR / _____ / _____

AMR PROGRAM INVENTORY FORM

Site Name P1

ADIT OPENING

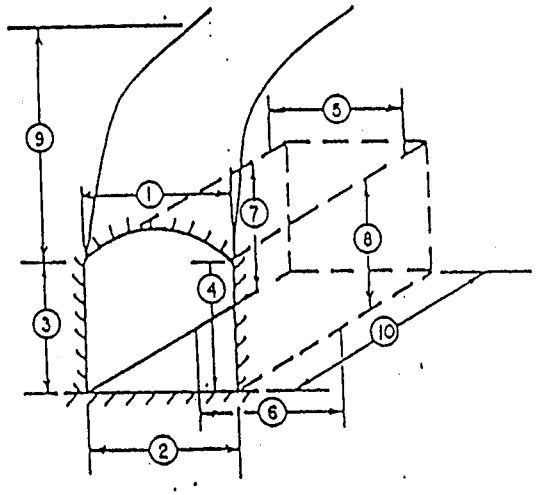

ENTRANCE MEASUREMENTS			_____ FEET INSIDE MEASUREMENTS		
Width at top entrance	1	12	Width at top inside	5	
Width at bottom entrance	2		Width at bottom inside	6	
Height left entrance	3	8	Height left inside	7	
Height right entrance	4		Height right inside	8	
Cover height above adit	9				
Type of Cover			Depth or Length	10	

SITE SKETCH

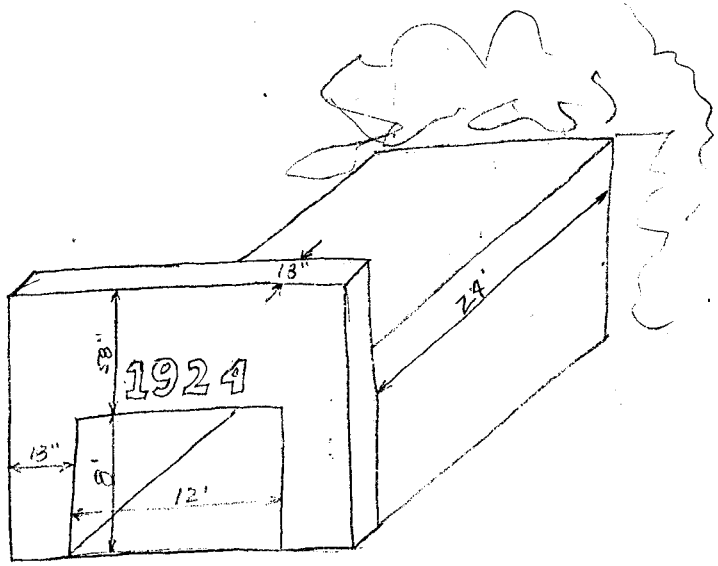

TAG NO. _____

DATE _____

PAGE _____ OF _____

PHOTOGRAPH NUMBERS:

ROLL 6

PICTURE(S) 28, 29

INVENTORIED BY

STATE OF UTAH
DEPARTMENT OF NATURAL RESOURCES
DIVISION OF OIL, GAS AND MINING

ADIT OR TUNNEL
FIELD DESCRIPTION FORM

FEATURE DESCRIPTION FORM
SHAFT or ADIT

Site ID: AMR / _____ / _____

Tag No: _____

CURRENT CONDITIONS:

Access to Feature *(check all that apply)*:
- ☐ no established trail
- ☐ foot trail
- ☐ ATV/motorcycle
- ● 4-WD road
- ☐ 2-WD dirt road
- ☐ paved road
- ☐ rubber-tired backhoe
- ☐ crawler (track) equipment
- ☐ helicopter
- ☐ wilderness restrictions

Condition of Entrance:
- ☐ Completely collapsed, no access to workings
- ● [redacted] backfilled at portal, mine visible but not accessible
- ☐ Partially collapsed or backfilled at portal, mine workings accessible
- ☐ Portal open for access with little or no backfill or collapse
- ☐ Obstruction at opening makes evaluation of condition impossible
- ☐ Existing wall/fence/grate *(circle one)*
  - ☐ intact, acceptable
  - ☐ intact, unacceptable
  - ☐ damaged, mine accessible
- ☐ Shaft collar competent (rock or cribbing)
- ☐ Shaft collar sloughing
- ☐ Signs of interior visitation (litter/graffiti) present
- ☐ Other _____

Stability of Opening/Host Rock:
- ☐ unconsolidated soil (unstable)
- ☐ friable (unstable)
- ☐ highly jointed, fractured (unstable)
- ☐ somewhat jointed (fairly stable)
- ● massive (stable, competent) conc.

Depth to Competent Rock: _____ feet

Water *(check all that apply)*:
- ■ no water present
- ☐ dry, but appears to have occasional water
- ☐ seep/saturated soil (no flow)
- ☐ standing water in opening
- ☐ discharge flowing from opening
- ☐ discharge infiltrates w/in 50 ft of opening
- ☐ discharge flows into intermittent stream
- ☐ discharge flows into perennial stream
- ☐ water flows through/over waste rock
- ☐ water or ground surface discolored
- ☐ wetland vegetation present

Wildlife Observations In/Near Opening:
- ☐ bats: roosting/flying *(circle)*
- ☐ birds: nesting/roosting/flying *(circle)*
- ☐ guano/droppings/owl pellets
- ☐ mammal tracks
- ☐ herps
- ● none observed

Apparent depth of workings: _____ feet
- ■ terminus visible
- ☐ workings extend beyond visibility limits
- ☐ crosscuts, other workings visible

Roof or collar support present:
- ■ none visible
- ☐ wood props/caps (occasional)
- ☐ stulls or square sets
- ☐ box cribbing (continuous wood lining)
- ☐ log/timber cribbed shaft collar
- ☐ loose rock walls or cribbing
- ☐ concrete shaft collar or adit bulkhead
- ☐ support is failing

MITIGATION/DESIGN CONSIDERATIONS:

Potential Mitigation Actions *(check all that apply)*:
- ☐ Masonry Bulkhead
- ☐ Backfill
- ☐ Bulkhead & Backfill
- ☐ Standard Adit Grate
- ☐ Bat Grate
- ☐ Cable Net
- ☐ Locking Adit Door
- ☐ Shaft Grate
- ☐ PUF Shaft Plug
- ☐ Blast
- ☐ Probe for mine opening (caved adit)
- ☐ Drainage Provisions Required
- ☐ Local Site Clean-up and Regrading
- ☐ Structure Demolition
- ☐ Surface Water Drainage Control
- ☐ Cultural Features Needing Protection Present
- ☐ No Action Required
- ☐ Other _____

Onsite Construction Material Availability:
- ☐ Stone suitable for bulkhead (w/in 100 ft)
- ☐ Backfill
- ☐ Materials not present

Backfill Material Source:
- ☐ mine dump
- ☐ dig or scale down from brow/adjacent slope
- ☐ blast from rock brow or adjacent rock face
- ☐ other _____

Mine Dump Size:
- ☐ small (<20 cubic yards)
- ☐ medium (20 - 100 cubic yards)
- ☐ large (>100 cubic yards)
- ☐ USFS Criteria A3 (>500 cubic yards)

AMR / _____ / _____

AMR PROGRAM INVENTORY FORM

Site Name PIC

ADIT OPENING

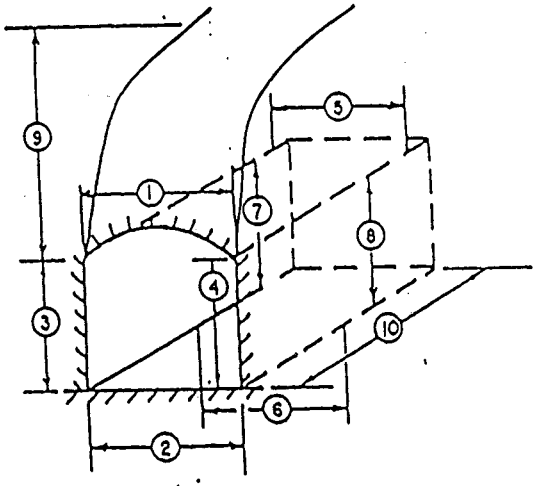

ENTRANCE MEASUREMENTS		_____ FEET INSIDE MEASUREMENTS	
Width at top entrance	1 _____	Width at top inside	5 _____
Width at bottom entrance	2 _____	Width at bottom inside	6 _____
Height left entrance	3 _____	Height left inside	7 _____
Height right entrance	4 _____	Height right inside	8 _____
Cover height above adit	9 _____		
Type of Cover	_____	Depth or Length	10 _____

SITE SKETCH

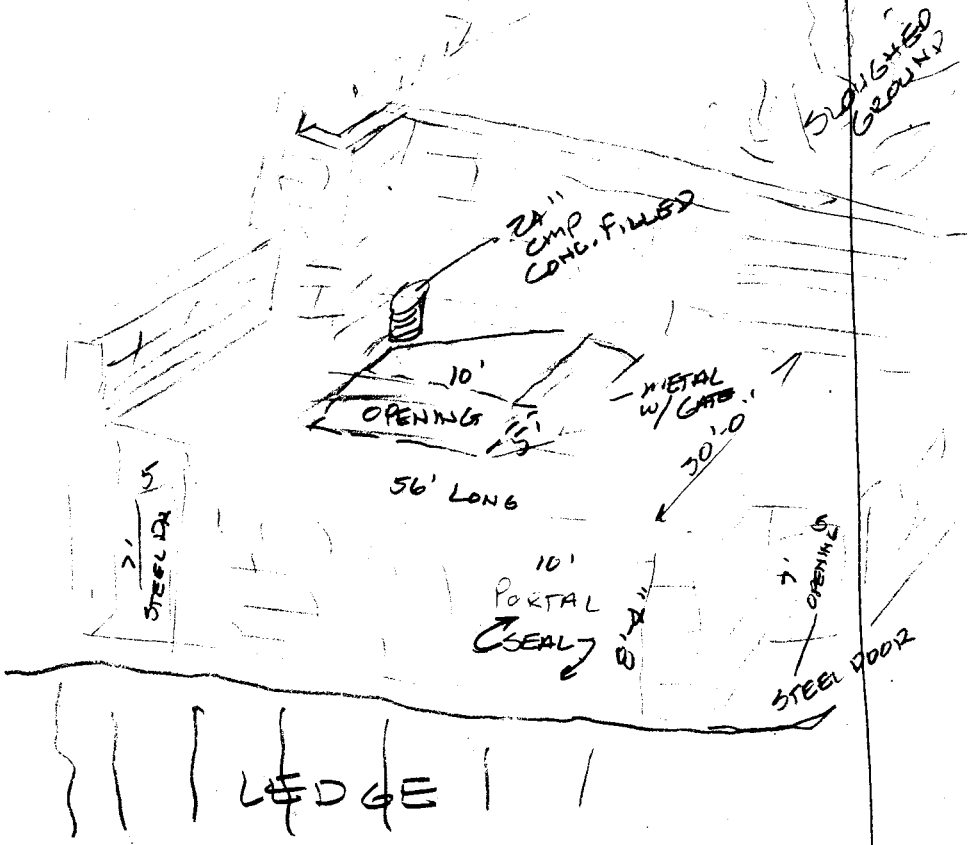

Squirrel fan is visible inside vertical opening

TAG NO. _____

DATE _____

PAGE _____ OF _____

PHOTOGRAPH NUMBERS:

ROLL _____

PICTURE(S) _____

INVENTORIED BY

STATE OF UTAH
DEPARTMENT OF NATURAL RESOURCES
DIVISION OF OIL, GAS AND MINING

ADIT OR TUNNEL
FIELD DESCRIPTION FORM

FEATURE DESCRIPTION FORM
SHAFT or ADIT

Site ID: AMR / _____ / _____

Tag No: _____

CURRENT CONDITIONS:

Access to Feature *(check all that apply)*:
- ☒ no established trail
- ☐ foot trail
- ☐ ATV/motorcycle
- ☐ 4-WD road
- ☐ 2-WD dirt road
- ☐ paved road
- ☐ rubber-tired backhoe
- ☐ crawler (track) equipment
- ☐ helicopter
- ☐ wilderness restrictions

Condition of Entrance:
- ☐ Completely collapsed, no access to workings
- ☒ Partially collapsed or backfilled at portal, mine visible but not accessible
- ☐ Partially collapsed or backfilled at portal, mine workings accessible
- ☐ Portal open for access with little or no backfill or collapse
- ☐ Obstruction at opening makes evaluation of condition impossible
- ☐ Existing wall/fence/grate *(circle one)*
  - ☐ intact, acceptable
  - ☐ intact, unacceptable
  - ☐ damaged, mine accessible
- ☐ Shaft collar competent (rock or cribbing)
- ☐ Shaft collar sloughing
- ☐ Signs of interior visitation (litter/graffiti) present
- ☐ Other _____

Stability of Opening/Host Rock:
- ☐ unconsolidated soil (unstable)
- ☐ friable (unstable)
- ☐ highly jointed, fractured (unstable)
- ☐ somewhat jointed (fairly stable)
- ☐ massive (stable, competent)

Depth to Competent Rock: _____ feet

Water *(check all that apply)*:
- ☒ no water present
- ☐ dry, but appears to have occasional water
- ☐ seep/saturated soil (no flow)
- ☐ standing water in opening
- ☐ discharge flowing from opening
- ☐ discharge infiltrates w/in 50 ft of opening
- ☐ discharge flows into intermittent stream
- ☐ discharge flows into perennial stream
- ☐ water flows through/over waste rock
- ☐ water or ground surface discolored
- ☐ wetland vegetation present

Wildlife Observations In/Near Opening:
- ☐ bats: roosting/flying *(circle)*
- ☐ birds: nesting/roosting/flying *(circle)*
- ☐ guano/droppings/owl pellets
- ☐ mammal tracks
- ☐ herps
- ☒ none observed

Apparent depth of workings: _____ feet
- ☐ terminus visible
- ☐ workings extend beyond visibility limits
- ☐ crosscuts, other workings visible

Roof or collar support present:
- ☐ none visible
- ☐ wood props/caps (occasional)
- ☐ stulls or square sets
- ☐ box cribbing (continuous wood lining)
- ☐ log/timber cribbed shaft collar
- ☐ loose rock walls or cribbing
- ☐ concrete shaft collar or adit bulkhead
- ☐ support is failing

MITIGATION/DESIGN CONSIDERATIONS:

Potential Mitigation Actions *(check all that apply)*:
- ☐ Masonry Bulkhead
- ☐ Backfill
- ☐ Bulkhead & Backfill
- ☐ Standard Adit Grate
- ☐ Bat Grate
- ☐ Cable Net
- ☐ Locking Adit Door
- ☐ Shaft Grate
- ☐ PUF Shaft Plug
- ☐ Blast
- ☐ Probe for mine opening (caved adit)
- ☐ Drainage Provisions Required
- ☐ Local Site Clean-up and Regrading
- ☐ Structure Demolition
- ☐ Surface Water Drainage Control
- ☐ Cultural Features Needing Protection Present
- ☐ No Action Required
- ☐ Other _____

Onsite Construction Material Availability:
- ☐ Stone suitable for bulkhead (w/in 100 ft)
- ☐ Backfill
- ☐ Materials not present

Backfill Material Source:
- ☐ mine dump
- ☐ dig or scale down from brow/adjacent slope
- ☐ blast from rock brow or adjacent rock face
- ☐ other _____

Mine Dump Size:
- ☐ small (<20 cubic yards)
- ☐ medium (20 - 100 cubic yards)
- ☐ large (>100 cubic yards)
- ☐ USFS Criteria A3 (>500 cubic yards)

AMR / _____ / _____

AMR PROGRAM INVENTORY FORM

Site Name P2

ADIT OPENING

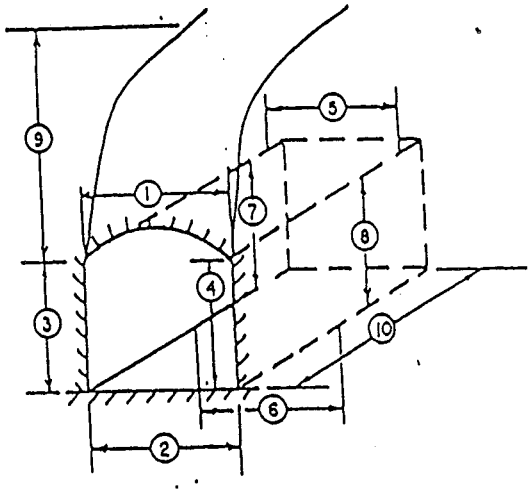

ENTRANCE MEASUREMENTS			FEET INSIDE MEASUREMENTS		
Width at top entrance	1	—	Width at top inside	5	—
Width at bottom entrance	2	16	Width at bottom inside	6	16
Height ~~left entrance~~ CTR	3	8	Height ~~left inside~~ CTR	7	8
Height right entrance	4		Height right inside	8	
Cover height above adit	9				
Type of Cover			Depth or Length	10	

SITE SKETCH

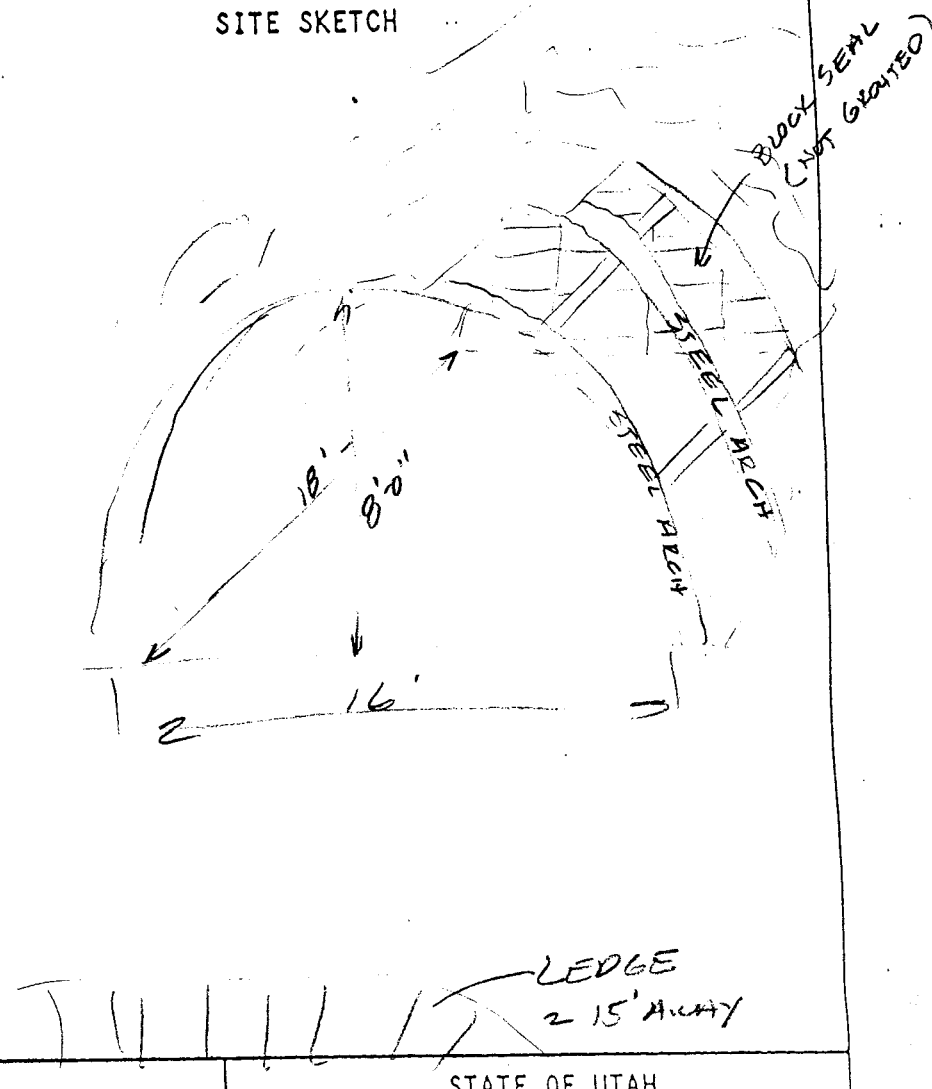

TAG NO. _____

DATE _____

PAGE _____ OF _____

PHOTOGRAPH NUMBERS:

ROLL _____

PICTURE(S) _____

INVENTORIED BY

STATE OF UTAH
DEPARTMENT OF NATURAL RESOURCES
DIVISION OF OIL, GAS AND MINING

ADIT OR TUNNEL
FIELD DESCRIPTION FORM

FEATURE DESCRIPTION FORM
SHAFT or ADIT

Site ID: AMR / _____ / _____

Tag No: _____

CURRENT CONDITIONS:

Access to Feature *(check all that apply)*:
- [x] no established trail
- [ ] foot trail
- [ ] ATV/motorcycle
- [ ] 4-WD road
- [ ] 2-WD dirt road
- [ ] paved road
- [ ] rubber-tired backhoe
- [ ] crawler (track) equipment
- [ ] helicopter
- [ ] wilderness restrictions

Condition of Entrance:
- [ ] Completely collapsed, no access to workings
- [ ] Partially collapsed or backfilled at portal, mine visible but not accessible
- [ ] Partially collapsed or backfilled at portal, mine workings accessible
- [x] Portal open for access with little or no backfill or collapse TO SEAL
- [ ] Obstruction at opening makes evaluation of condition impossible
- [ ] Existing wall/fence/grate *(circle one)*
  - [ ] intact, acceptable
  - [ ] intact, unacceptable
  - [ ] damaged, mine accessible
- [ ] Shaft collar competent (rock or cribbing)
- [ ] Shaft collar sloughing
- [ ] Signs of interior visitation (litter/graffiti) present
- [ ] Other _____

Stability of Opening/Host Rock:
- [ ] unconsolidated soil (unstable)
- [ ] friable (unstable)
- [ ] highly jointed, fractured (unstable)
- [ ] somewhat jointed (fairly stable)
- [x] massive (stable, competent) STEEL ARCHING & SKIN

Depth to Competent Rock: _____ feet

Water *(check all that apply)*:
- [x] no water present
- [ ] dry, but appears to have occasional water
- [ ] seep/saturated soil (no flow)
- [ ] standing water in opening
- [ ] discharge flowing from opening
- [ ] discharge infiltrates w/in 50 ft of opening
- [ ] discharge flows into intermittent stream
- [ ] discharge flows into perennial stream
- [ ] water flows through/over waste rock
- [ ] water or ground surface discolored
- [ ] wetland vegetation present

Wildlife Observations In/Near Opening:
- [ ] bats: roosting/flying *(circle)*
- [ ] birds: nesting/roosting/flying *(circle)*
- [ ] guano/droppings/owl pellets
- [ ] mammal tracks
- [ ] herps
- [x] none observed

Apparent depth of workings: _____ feet
- [x] terminus visible (SEAL)
- [ ] workings extend beyond visibility limits
- [ ] crosscuts, other workings visible

Roof or collar support present:
- [ ] none visible
- [ ] wood props/caps (occasional)
- [ ] stulls or square sets
- [ ] box cribbing (continuous wood lining)
- [ ] log/timber cribbed shaft collar
- [ ] loose rock walls or cribbing
- [ ] concrete shaft collar or adit bulkhead
- [ ] support is failing
- [x] STEEL ARCHING & SKIN

MITIGATION/DESIGN CONSIDERATIONS:

Potential Mitigation Actions *(check all that apply)*:
- [ ] Masonry Bulkhead
- [ ] Backfill
- [ ] Bulkhead & Backfill
- [ ] Standard Adit Grate
- [ ] Bat Grate
- [ ] Cable Net
- [ ] Locking Adit Door
- [ ] Shaft Grate
- [ ] PUF Shaft Plug
- [ ] Blast
- [ ] Probe for mine opening (caved adit)
- [ ] Drainage Provisions Required
- [ ] Local Site Clean-up and Regrading
- [ ] Structure Demolition
- [ ] Surface Water Drainage Control
- [ ] Cultural Features Needing Protection Present
- [ ] No Action Required
- [ ] Other _____

Onsite Construction Material Availability:
- [ ] Stone suitable for bulkhead (w/in 100 ft)
- [ ] Backfill
- [ ] Materials not present

Backfill Material Source:
- [ ] mine dump
- [ ] dig or scale down from brow/adjacent slope
- [ ] blast from rock brow or adjacent rock face
- [ ] other _____

Mine Dump Size:
- [ ] small (<20 cubic yards)
- [ ] medium (20 - 100 cubic yards)
- [ ] large (>100 cubic yards)
- [ ] USFS Criteria A3 (>500 cubic yards)

AMR / _____ / _____

AMR PROGRAM INVENTORY FORM

Site Name P18 & P19

ADIT OPENING

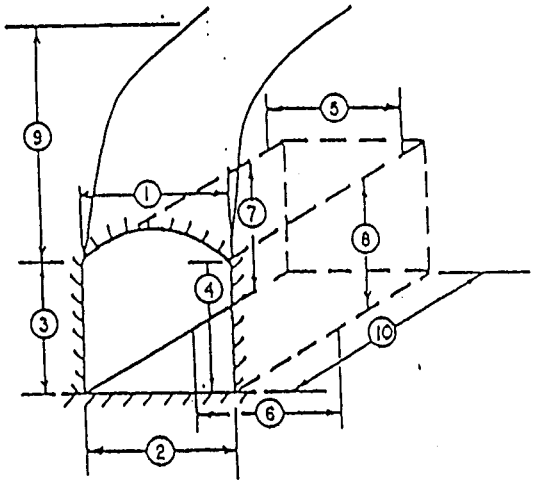

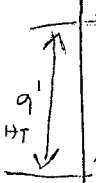

SITE SKETCH

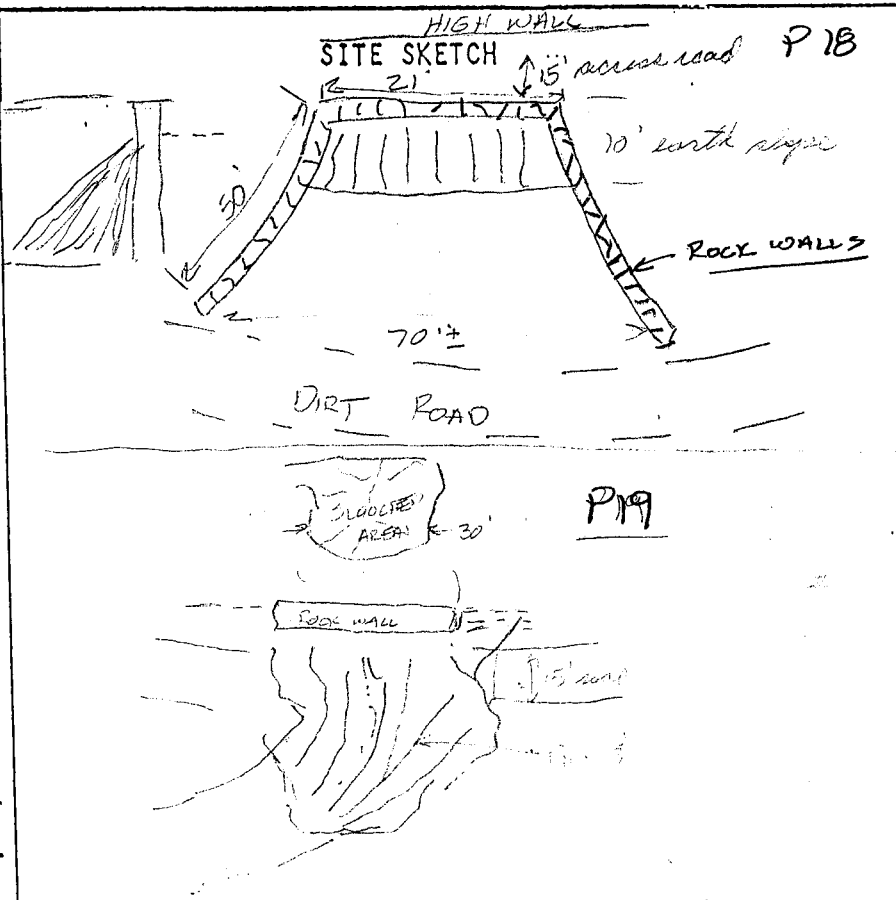

ENTRANCE MEASUREMENTS			_____ FEET INSIDE MEASUREMENTS		
Width at top entrance	1	20' P18	Width at top inside	5	
Width at bottom entrance	2		Width at bottom inside	6	
Height left entrance	3	8' P18	Height left inside	7	
Height right entrance	4		Height right inside	8	
Cover height above adit	9	20' P18			
Type of Cover			Depth or Length	10	

TAG NO. _____

DATE _____

PAGE _____ OF _____

PHOTOGRAPH NUMBERS:

ROLL A

PICTURE(S) 1, 2, 6

INVENTORIED BY

STATE OF UTAH
DEPARTMENT OF NATURAL RESOURCES
DIVISION OF OIL, GAS AND MINING

ADIT OR TUNNEL
FIELD DESCRIPTION FORM

FEATURE DESCRIPTION FORM
SHAFT or ADIT

Site ID: AMR / _____ / _____

Tag No: _____

CURRENT CONDITIONS:

Access to Feature *(check all that apply)*:
- ☐ no established trail
- ☐ foot trail
- ☐ ATV/motorcycle
- ☐ 4-WD road
- ● 2-WD dirt road
- ☐ paved road
- ☐ rubber-tired backhoe
- ☐ crawler (track) equipment
- ☐ helicopter
- ☐ wilderness restrictions

Condition of Entrance:
- ☐ Completely collapsed, no access to workings
- ● ~~Partially collapsed or~~ backfilled at portal, mine visible but not accessible
- ☐ Partially collapsed or backfilled at portal, mine workings accessible
- ☐ Portal open for access with little or no backfill or collapse
- ☐ Obstruction at opening makes evaluation of condition impossible
- ☐ Existing wall/fence/grate *(circle one)*
  - ☐ intact, acceptable
  - ☐ intact, unacceptable
  - ☐ damaged, mine accessible
- ☐ Shaft collar competent (rock or cribbing)
- ☐ Shaft collar sloughing
- ☐ Signs of interior visitation (litter/graffiti) present
- ☐ Other _____

Stability of Opening/Host Rock:
- ☐ unconsolidated soil (unstable)
- ☐ friable (unstable)
- ☐ highly jointed, fractured (unstable)
- ● somewhat jointed (fairly stable)
- ☐ massive (stable, competent)

Depth to Competent Rock: _____ feet

Water *(check all that apply)*:
- ● no water present
- ☐ dry, but appears to have occasional water
- ☐ seep/saturated soil (no flow)
- ☐ standing water in opening
- ☐ discharge flowing from opening
- ☐ discharge infiltrates w/in 50 ft of opening
- ☐ discharge flows into intermittent stream
- ☐ discharge flows into perennial stream
- ☐ water flows through/over waste rock
- ☐ water or ground surface discolored
- ☐ wetland vegetation present

Wildlife Observations In/Near Opening:
- ☐ bats: roosting/flying *(circle)*
- ☐ birds: nesting/roosting/flying *(circle)*
- ☐ guano/droppings/owl pellets
- ☐ mammal tracks
- ☐ herps
- ● none observed

Apparent depth of workings: _____ feet
- ● terminus visible
- ☐ workings extend beyond visibility limits
- ☐ crosscuts, other workings visible

Roof or collar support present:
- ☐ none visible
- ☐ wood props/caps (occasional)
- ☐ stulls or square sets
- ☐ box cribbing (continuous wood lining)
- ☐ log/timber cribbed shaft collar
- ☐ loose rock walls or cribbing
- ☐ concrete shaft collar or adit bulkhead
- ☐ support is failing

MITIGATION/DESIGN CONSIDERATIONS:

Potential Mitigation Actions *(check all that apply)*:
- ☐ Masonry Bulkhead
- ☐ Backfill
- ☐ Bulkhead & Backfill
- ☐ Standard Adit Grate
- ☐ Bat Grate
- ☐ Cable Net
- ☐ Locking Adit Door
- ☐ Shaft Grate
- ☐ PUF Shaft Plug
- ☐ Blast
- ☐ Probe for mine opening (caved adit)
- ☐ Drainage Provisions Required
- ☐ Local Site Clean-up and Regrading
- ☐ Structure Demolition
- ☐ Surface Water Drainage Control
- ☐ Cultural Features Needing Protection Present
- ☐ No Action Required
- ☐ Other _____

Onsite Construction Material Availability:
- ☐ Stone suitable for bulkhead (w/in 100 ft)
- ☐ Backfill
- ☐ Materials not present

Backfill Material Source:
- ☐ mine dump
- ☐ dig or scale down from brow/adjacent slope
- ☐ blast from rock brow or adjacent rock face
- ☐ other _____

Mine Dump Size:
- ☐ small (<20 cubic yards)
- ☐ medium (20 - 100 cubic yards)
- ☐ large (>100 cubic yards)
- ☐ USFS Criteria A3 (>500 cubic yards)

AMR / _____ / _____

AMR PROGRAM INVENTORY FORM

Site Name P20 A

ADIT OPENING

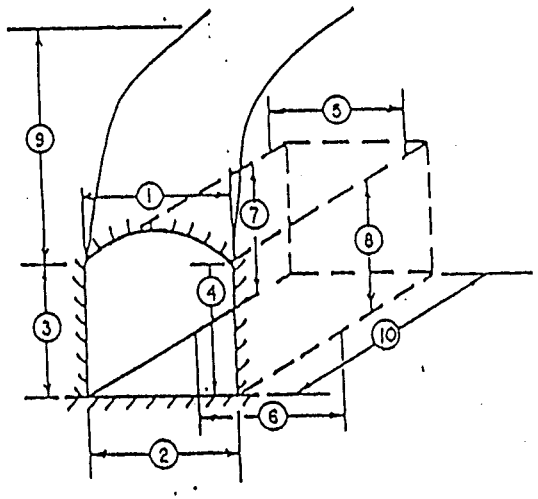

ENTRANCE MEASUREMENTS			_____ FEET INSIDE MEASUREMENTS		
Width at top entrance	1	_____	Width at top inside	5	_____
Width at bottom entrance	2	_____	Width at bottom inside	6	_____
Height left entrance	3	_____	Height left inside	7	_____
Height right entrance	4	_____	Height right inside	8	_____
Cover height above adit	9	_____			
Type of Cover		_____	Depth or Length	10	_____

SITE SKETCH

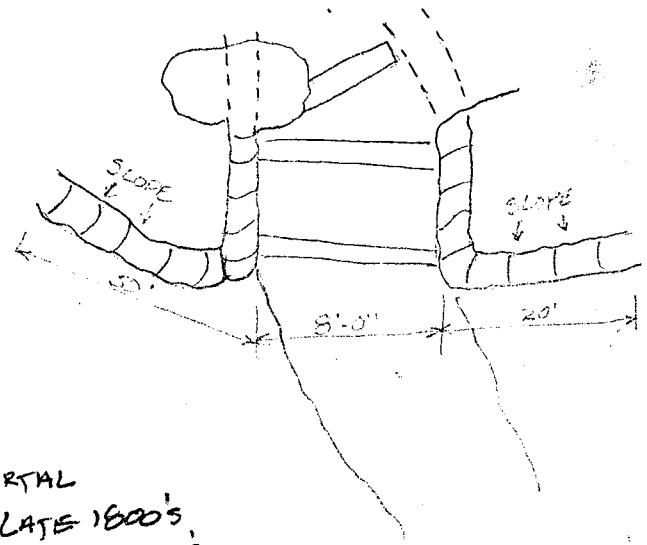

PORTAL
LATE 1800'S
EARLY 1900'S

TAG NO. _____

DATE _____

PAGE _____ OF _____

PHOTOGRAPH NUMBERS:

ROLL A

PICTURE(S) 7, 8, 11

INVENTORIED BY

STATE OF UTAH
DEPARTMENT OF NATURAL RESOURCES
DIVISION OF OIL, GAS AND MINING

ADIT OR TUNNEL
FIELD DESCRIPTION FORM

FEATURE DESCRIPTION FORM
SHAFT or ADIT

Site ID: AMR / _____ / _____

Tag No: _____

CURRENT CONDITIONS:

Access to Feature *(check all that apply)*:
- ☐ no established trail
- ● foot trail FROM EXISTG ROAD
- ☐ ATV/motorcycle
- ☐ 4-WD road
- ☐ 2-WD dirt road
- ☐ paved road
- ☐ rubber-tired backhoe
- ☐ crawler (track) equipment
- ☐ helicopter
- ☐ wilderness restrictions

Condition of Entrance:
- ● Completely collapsed, no access to workings
- ☐ Partially collapsed or backfilled at portal, mine visible but not accessible
- ☐ Partially collapsed or backfilled at portal, mine workings accessible
- ☐ Portal open for access with little or no backfill or collapse
- ☐ Obstruction at opening makes evaluation of condition impossible
- ☐ Existing wall/fence/grate *(circle one)*
  - ☐ intact, acceptable
  - ☐ intact, unacceptable
  - ☐ damaged, mine accessible
- ☐ Shaft collar competent (rock or cribbing)
- ☐ Shaft collar sloughing
- ☐ Signs of interior visitation (litter/graffiti) present
- ☐ Other _____

Stability of Opening/Host Rock:
- ☐ unconsolidated soil (unstable)
- ● friable (unstable)
- ☐ highly jointed, fractured (unstable)
- ☐ somewhat jointed (fairly stable)
- ☐ massive (stable, competent)

Depth to Competent Rock: _____ feet

Water *(check all that apply)*:
- ● no water present
- ☐ dry, but appears to have occasional water
- ☐ seep/saturated soil (no flow)
- ☐ standing water in opening
- ☐ discharge flowing from opening
- ☐ discharge infiltrates w/in 50 ft of opening
- ☐ discharge flows into intermittent stream
- ☐ discharge flows into perennial stream
- ☐ water flows through/over waste rock
- ☐ water or ground surface discolored
- ☐ wetland vegetation present

Wildlife Observations In/Near Opening:
- ☐ bats: roosting/flying *(circle)*
- ☐ birds: nesting/roosting/flying *(circle)*
- ☐ guano/droppings/owl pellets
- ☐ mammal tracks
- ☐ herps
- ● none observed

Apparent depth of workings: _____ feet
- ☐ terminus visible
- ☐ workings extend beyond visibility limits
- ☐ crosscuts, other workings visible

Roof or collar support present:
- ☐ none visible
- ● wood props/caps (occasional)
- ☐ stulls or square sets
- ☐ box cribbing (continuous wood lining)
- ● log/timber cribbed shaft collar
- ☐ loose rock walls or cribbing
- ☐ concrete shaft collar or adit bulkhead
- ☐ support is failing

MITIGATION/DESIGN CONSIDERATIONS:

Potential Mitigation Actions *(check all that apply)*:
- ☐ Masonry Bulkhead
- ☐ Backfill
- ☐ Bulkhead & Backfill
- ☐ Standard Adit Grate
- ☐ Bat Grate
- ☐ Cable Net
- ☐ Locking Adit Door
- ☐ Shaft Grate
- ☐ PUF Shaft Plug
- ☐ Blast
- ☐ Probe for mine opening (caved adit)
- ☐ Drainage Provisions Required
- ☐ Local Site Clean-up and Regrading
- ☐ Structure Demolition
- ☐ Surface Water Drainage Control
- ☐ Cultural Features Needing Protection Present
- ☐ No Action Required
- ☐ Other _____

Onsite Construction Material Availability:
- ☐ Stone suitable for bulkhead (w/in 100 ft)
- ☐ Backfill
- ☐ Materials not present

Backfill Material Source:
- ☐ mine dump
- ☐ dig or scale down from brow/adjacent slope
- ☐ blast from rock brow or adjacent rock face
- ☐ other _____

Mine Dump Size:
- ☐ small (<20 cubic yards)
- ☐ medium (20 - 100 cubic yards)
- ☐ large (>100 cubic yards)
- ☐ USFS Criteria A3 (>500 cubic yards)

AMR / _____ / _____

AMR PROGRAM INVENTORY FORM

Site Name P20b

ADIT OPENING

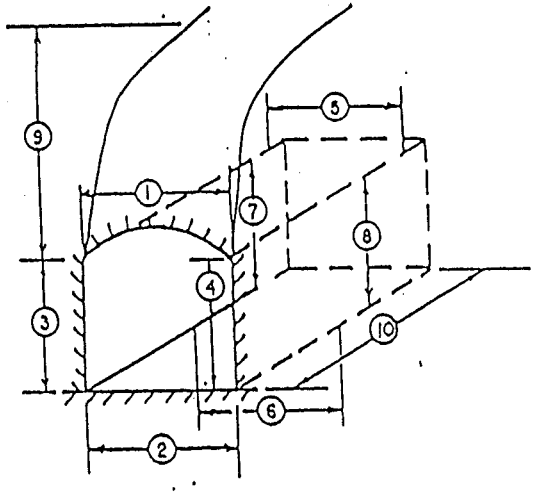

ENTRANCE MEASUREMENTS		_____ FEET INSIDE MEASUREMENTS	
Width at top entrance	1 _____	Width at top inside	5 _____
Width at bottom entrance	2 _____	Width at bottom inside	6 _____
Height left entrance	3 _____	Height left inside	7 _____
Height right entrance	4 _____	Height right inside	8 _____
Cover height above adit	9 _____		
Type of Cover _____		Depth or Length	10 _____

SITE SKETCH

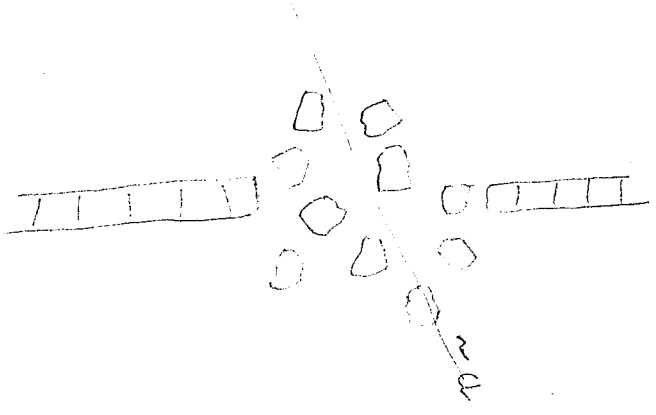

TAG NO. _____

DATE _____

PAGE _____ OF _____

PHOTOGRAPH NUMBERS:

ROLL #

PICTURE(S) #11

INVENTORIED BY

STATE OF UTAH
DEPARTMENT OF NATURAL RESOURCES
DIVISION OF OIL, GAS AND MINING

ADIT OR TUNNEL
FIELD DESCRIPTION FORM

FEATURE DESCRIPTION FORM
SHAFT or ADIT

Site ID: AMR / _____ / _____

Tag No: _____

CURRENT CONDITIONS:

Access to Feature *(check all that apply)*:
- ☐ no established trail
- ● foot trail BY EXIOTT'S ROAD
- ☐ ATV/motorcycle
- ☐ 4-WD road
- ☐ 2-WD dirt road
- ☐ paved road
- ☐ rubber-tired backhoe
- ☐ crawler (track) equipment
- ☐ helicopter
- ☐ wilderness restrictions

Condition of Entrance:
- ● Completely collapsed, no access to workings
- ☐ Partially collapsed or backfilled at portal, mine visible but not accessible
- ☐ Partially collapsed or backfilled at portal, mine workings accessible
- ☐ Portal open for access with little or no backfill or collapse
- ☐ Obstruction at opening makes evaluation of condition impossible
- ☐ Existing wall/fence/grate *(circle one)*
  - ☐ intact, acceptable
  - ☐ intact, unacceptable
  - ☐ damaged, mine accessible
- ☐ Shaft collar competent (rock or cribbing)
- ☐ Shaft collar sloughing
- ☐ Signs of interior visitation (litter/graffiti) present
- ☐ Other _____

Stability of Opening/Host Rock:
- ● unconsolidated soil (unstable)
- ☐ friable (unstable)
- ☐ highly jointed, fractured (unstable)
- ☐ somewhat jointed (fairly stable)
- ☐ massive (stable, competent)

Depth to Competent Rock: _____ feet

Water *(check all that apply)*:
- ● no water present
- ☐ dry, but appears to have occasional water
- ☐ seep/saturated soil (no flow)
- ☐ standing water in opening
- ☐ discharge flowing from opening
- ☐ discharge infiltrates w/in 50 ft of opening
- ☐ discharge flows into intermittent stream
- ☐ discharge flows into perennial stream
- ☐ water flows through/over waste rock
- ☐ water or ground surface discolored
- ☐ wetland vegetation present

Wildlife Observations In/Near Opening:
- ☐ bats: roosting/flying *(circle)*
- ☐ birds: nesting/roosting/flying *(circle)*
- ☐ guano/droppings/owl pellets
- ☐ mammal tracks
- ☐ herps
- ● none observed

Apparent depth of workings: _____ feet
- ● terminus visible
- ☐ workings extend beyond visibility limits
- ☐ crosscuts, other workings visible

Roof or collar support present:
- ☐ none visible
- ☐ wood props/caps (occasional)
- ☐ stulls or square sets
- ☐ box cribbing (continuous wood lining)
- ☐ log/timber cribbed shaft collar
- ☐ loose rock walls or cribbing
- ☐ concrete shaft collar or adit bulkhead
- ☐ support is failing

MITIGATION/DESIGN CONSIDERATIONS:

Potential Mitigation Actions *(check all that apply)*:
- ☐ Masonry Bulkhead
- ☐ Backfill
- ☐ Bulkhead & Backfill
- ☐ Standard Adit Grate
- ☐ Bat Grate
- ☐ Cable Net
- ☐ Locking Adit Door
- ☐ Shaft Grate
- ☐ PUF Shaft Plug
- ☐ Blast
- ☐ Probe for mine opening (caved adit)
- ☐ Drainage Provisions Required
- ☐ Local Site Clean-up and Regrading
- ☐ Structure Demolition
- ☐ Surface Water Drainage Control
- ☐ Cultural Features Needing Protection Present
- ☐ No Action Required
- ☐ Other _____

Onsite Construction Material Availability:
- ☐ Stone suitable for bulkhead (w/in 100 ft)
- ☐ Backfill
- ☐ Materials not present

Backfill Material Source:
- ☐ mine dump
- ☐ dig or scale down from brow/adjacent slope
- ☐ blast from rock brow or adjacent rock face
- ☐ other _____

Mine Dump Size:
- ☐ small (<20 cubic yards)
- ☐ medium (20 - 100 cubic yards)
- ☐ large (>100 cubic yards)
- ☐ USFS Criteria A3 (>500 cubic yards)

AMR / _____ / _____

AMR PROGRAM INVENTORY FORM

Site Name P22 & P23

ADIT OPENING

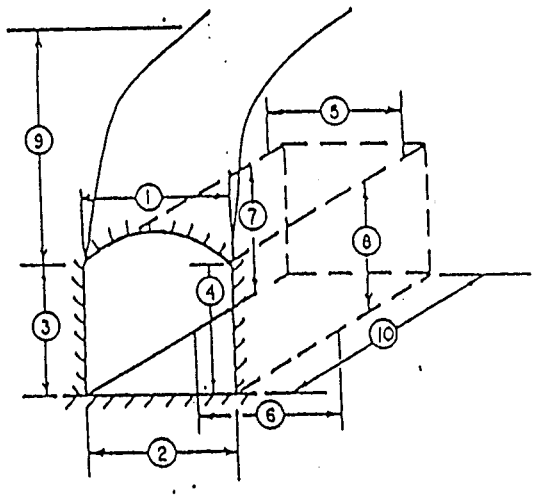

SITE SKETCH

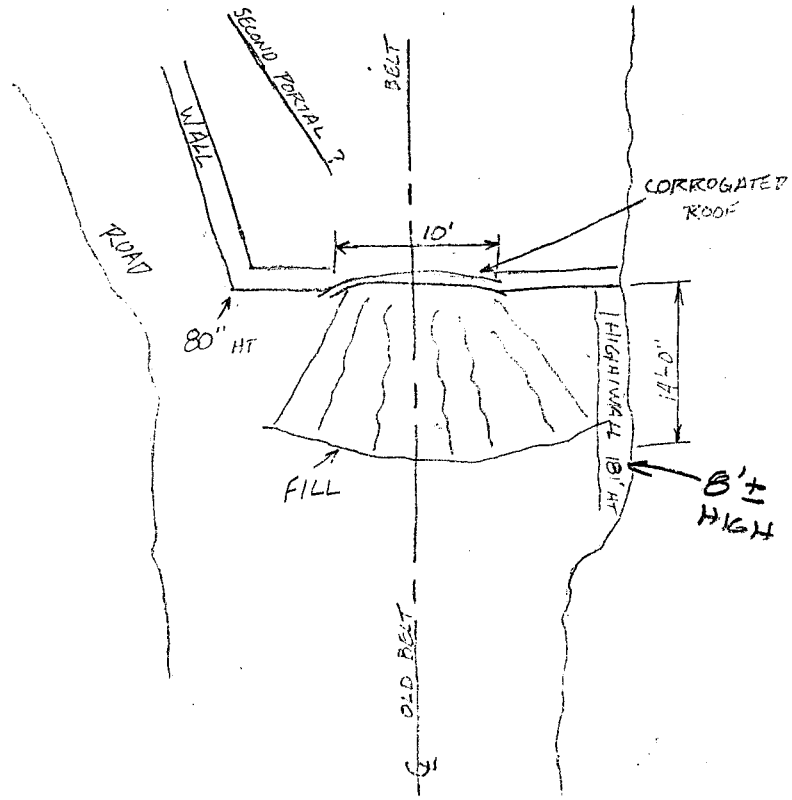

ENTRANCE MEASUREMENTS			_____ FEET INSIDE MEASUREMENTS		
Width at top entrance	1	10'	Width at top inside	5	9'
Width at bottom entrance	2		Width at bottom inside	6	
Height left entrance	3		Height left inside	7	
Height right entrance	4		Height right inside	8	
Cover height above adit	9				
Type of Cover			Depth or Length	10	

TAG NO. _____

DATE _____

PAGE _____ OF _____

PHOTOGRAPH NUMBERS:

ROLL B

PICTURE(S) #14

INVENTORIED BY

STATE OF UTAH
DEPARTMENT OF NATURAL RESOURCES
DIVISION OF OIL, GAS AND MINING

ADIT OR TUNNEL
FIELD DESCRIPTION FORM

FEATURE DESCRIPTION FORM
SHAFT or ADIT

Site ID: AMR / _____ / _____

Tag No: _____

CURRENT CONDITIONS:

Access to Feature *(check all that apply)*:
- ☐ no established trail
- ☐ foot trail
- ☐ ATV/motorcycle
- ☐ 4-WD road
- ● 2-WD dirt road
- ☐ paved road
- ☐ rubber-tired backhoe
- ☐ crawler (track) equipment
- ☐ helicopter
- ☐ wilderness restrictions

Condition of Entrance:
- ☐ Completely collapsed, no access to workings
- ● ~~Partially collapsed or~~ backfilled at portal, mine visible but not accessible
- ☐ Partially collapsed or backfilled at portal, mine workings accessible
- ☐ Portal open for access with little or no backfill or collapse
- ☐ Obstruction at opening makes evaluation of condition impossible
- ☐ Existing wall/fence/grate *(circle one)*
  - ☐ intact, acceptable
  - ☐ intact, unacceptable
  - ☐ damaged, mine accessible
- ☐ Shaft collar competent (rock or cribbing)
- ☐ Shaft collar sloughing
- ☐ Signs of interior visitation (litter/graffiti) present
- ☐ Other _____

Stability of Opening/Host Rock:
- ☐ unconsolidated soil (unstable)
- ☐ friable (unstable)
- ☐ highly jointed, fractured (unstable)
- ☐ somewhat jointed (fairly stable)
- ☐ massive (stable, competent)

Depth to Competent Rock: _____ feet

Water *(check all that apply)*:
- ● no water present
- ☐ dry, but appears to have occasional water
- ☐ seep/saturated soil (no flow)
- ☐ standing water in opening
- ☐ discharge flowing from opening
- ☐ discharge infiltrates w/in 50 ft of opening
- ☐ discharge flows into intermittent stream
- ☐ discharge flows into perennial stream
- ☐ water flows through/over waste rock
- ☐ water or ground surface discolored
- ☐ wetland vegetation present

Wildlife Observations In/Near Opening:
- ☐ bats: roosting/flying *(circle)*
- ☐ birds: nesting/roosting/flying *(circle)*
- ☐ guano/droppings/owl pellets
- ☐ mammal tracks
- ☐ herps
- ☐ none observed

Apparent depth of workings: 0 feet
- ● terminus visible
- ☐ workings extend beyond visibility limits
- ☐ crosscuts, other workings visible

Roof or collar support present:
- ● none visible
- ☐ wood props/caps (occasional)
- ☐ stulls or square sets
- ☐ box cribbing (continuous wood lining)
- ☐ log/timber cribbed shaft collar
- ☐ loose rock walls or cribbing
- ☐ concrete shaft collar or adit bulkhead
- ☐ support is failing

MITIGATION/DESIGN CONSIDERATIONS:

Potential Mitigation Actions *(check all that apply)*:
- ☐ Masonry Bulkhead
- ☐ Backfill
- ☐ Bulkhead & Backfill
- ☐ Standard Adit Grate
- ☐ Bat Grate
- ☐ Cable Net
- ☐ Locking Adit Door
- ☐ Shaft Grate
- ☐ PUF Shaft Plug
- ☐ Blast
- ☐ Probe for mine opening (caved adit)
- ☐ Drainage Provisions Required
- ☐ Local Site Clean-up and Regrading
- ☐ Structure Demolition
- ☐ Surface Water Drainage Control
- ☐ Cultural Features Needing Protection Present
- ☐ No Action Required
- ☐ Other _____

Onsite Construction Material Availability:
- ☐ Stone suitable for bulkhead (w/in 100 ft)
- ☐ Backfill
- ☐ Materials not present

Backfill Material Source:
- ☐ mine dump
- ☐ dig or scale down from brow/adjacent slope
- ☐ blast from rock brow or adjacent rock face
- ☐ other _____

Mine Dump Size:
- ☐ small (<20 cubic yards)
- ☐ medium (20 - 100 cubic yards)
- ☐ large (>100 cubic yards)
- ☐ USFS Criteria A3 (>500 cubic yards)

AMR / _____ / _____

AMR PROGRAM INVENTORY FORM

Site Name P26

ADIT OPENING

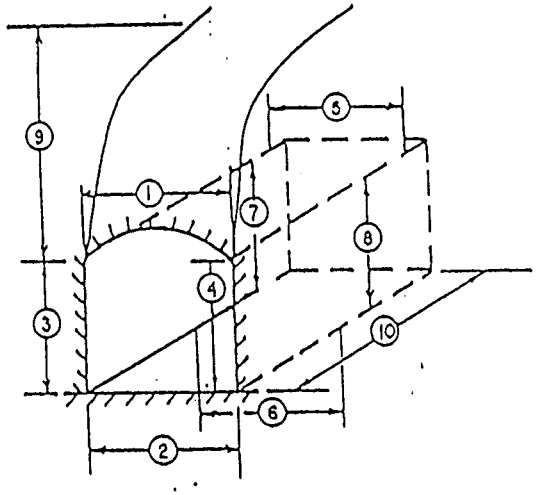

SITE SKETCH

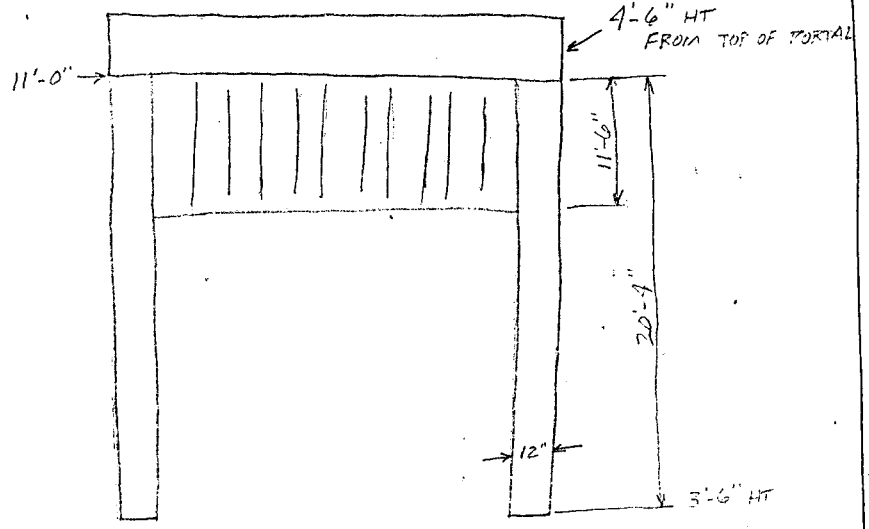

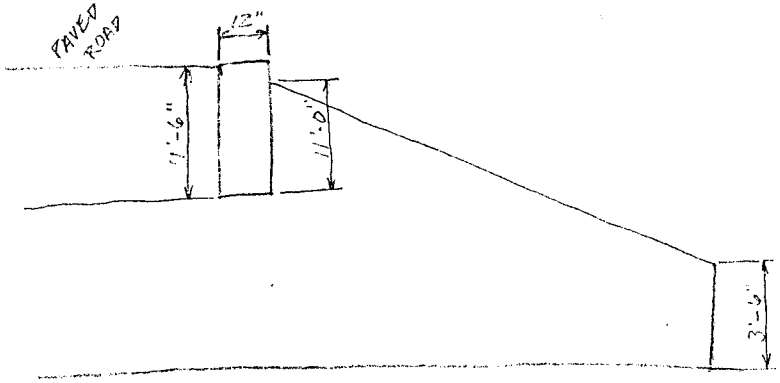

ENTRANCE MEASUREMENTS			_____ FEET INSIDE MEASUREMENTS		
Width at top entrance	1	19	Width at top inside	5	
Width at bottom entrance	2	19	Width at bottom inside	6	
Height left entrance	3	7	Height left inside	7	
Height right entrance	4	7	Height right inside	8	
Cover height above adit	9				
Type of Cover			Depth or Length	10	

TAG NO. _____

DATE _____

PAGE _____ OF _____

PHOTOGRAPH NUMBERS:

ROLL B

PICTURE(S) # 12 & 13

INVENTORIED BY

STATE OF UTAH
DEPARTMENT OF NATURAL RESOURCES
DIVISION OF OIL, GAS AND MINING

ADIT OR TUNNEL
FIELD DESCRIPTION FORM

FEATURE DESCRIPTION FORM
SHAFT or ADIT

Site ID: AMR / _____ / _____

Tag No: _____

CURRENT CONDITIONS:

Access to Feature *(check all that apply)*:
- ☐ no established trail
- ☐ foot trail
- ☐ ATV/motorcycle
- ☐ 4-WD road
- ● 2-WD dirt road
- ☐ paved road
- ☐ rubber-tired backhoe
- ☐ crawler (track) equipment
- ☐ helicopter
- ☐ wilderness restrictions

Condition of Entrance:
- ☐ Completely collapsed, no access to workings
- ● ~~Partially collapsed or~~ backfilled at portal, mine visible but not accessible TO SEAL
- ☐ Partially collapsed or backfilled at portal, mine workings accessible
- ☐ Portal open for access with little or no backfill or collapse
- ☐ Obstruction at opening makes evaluation of condition impossible
- ☐ Existing wall/fence/grate *(circle one)*
  - ☐ intact, acceptable
  - ☐ intact, unacceptable
  - ☐ damaged, mine accessible
- ☐ Shaft collar competent (rock or cribbing)
- ☐ Shaft collar sloughing
- ☐ Signs of interior visitation (litter/graffiti) present
- ☐ Other _____

Stability of Opening/Host Rock:
- ☐ unconsolidated soil (unstable)
- ☐ friable (unstable)
- ☐ highly jointed, fractured (unstable)
- ☐ somewhat jointed (fairly stable)
- ● massive (stable, competent) (CONC.)

Depth to Competent Rock: _____ feet

Water *(check all that apply)*:
- ● no water present
- ☐ dry, but appears to have occasional water
- ☐ seep/saturated soil (no flow)
- ☐ standing water in opening
- ☐ discharge flowing from opening
- ☐ discharge infiltrates w/in 50 ft of opening
- ☐ discharge flows into intermittent stream
- ☐ discharge flows into perennial stream
- ☐ water flows through/over waste rock
- ☐ water or ground surface discolored
- ☐ wetland vegetation present

Wildlife Observations In/Near Opening:
- ☐ bats: roosting/flying *(circle)*
- ☐ birds: nesting/roosting/flying *(circle)*
- ☐ guano/droppings/owl pellets
- ● mammal tracks
- ☐ herps
- ☐ none observed

Apparent depth of workings: _____ feet
- ● terminus visible
- ☐ workings extend beyond visibility limits
- ☐ crosscuts, other workings visible

Roof or collar support present:
- ☐ none visible
- ☐ wood props/caps (occasional)
- ☐ stulls or square sets
- ☐ box cribbing (continuous wood lining)
- ☐ log/timber cribbed shaft collar
- ☐ loose rock walls or cribbing
- ● concrete shaft collar or adit bulkhead
- ☐ support is failing

MITIGATION/DESIGN CONSIDERATIONS:

Potential Mitigation Actions *(check all that apply)*:
- ☐ Masonry Bulkhead
- ☐ Backfill
- ☐ Bulkhead & Backfill
- ☐ Standard Adit Grate
- ☐ Bat Grate
- ☐ Cable Net
- ☐ Locking Adit Door
- ☐ Shaft Grate
- ☐ PUF Shaft Plug
- ☐ Blast
- ☐ Probe for mine opening (caved adit)
- ☐ Drainage Provisions Required
- ☐ Local Site Clean-up and Regrading
- ☐ Structure Demolition
- ☐ Surface Water Drainage Control
- ☐ Cultural Features Needing Protection Present
- ☐ No Action Required
- ☐ Other _____

Onsite Construction Material Availability:
- ☐ Stone suitable for bulkhead (w/in 100 ft)
- ☐ Backfill
- ☐ Materials not present

Backfill Material Source:
- ☐ mine dump
- ☐ dig or scale down from brow/adjacent slope
- ☐ blast from rock brow or adjacent rock face
- ☐ other _____

Mine Dump Size:
- ☐ small (<20 cubic yards)
- ☐ medium (20 - 100 cubic yards)
- ☐ large (>100 cubic yards)
- ☐ USFS Criteria A3 (>500 cubic yards)

AMR / _____ / _____

AMR PROGRAM INVENTORY FORM

Site Name P28 & P29 Twin Portals

ADIT OPENING

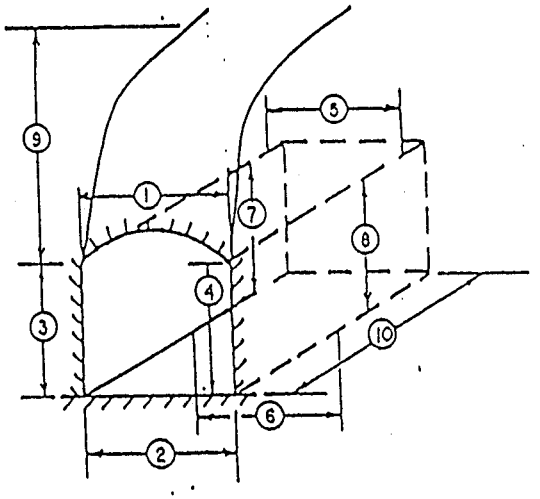

SITE SKETCH

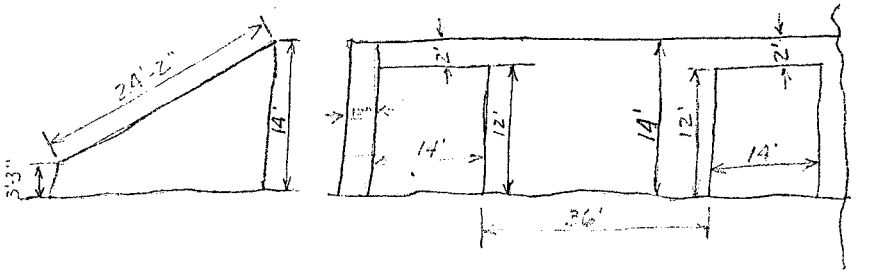

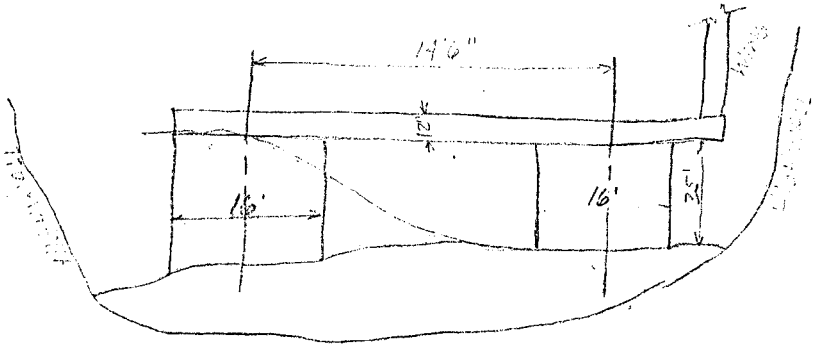

ENTRANCE MEASUREMENTS			_____ FEET INSIDE MEASUREMENTS		
Width at top entrance	1	14'	Width at top inside	5	14'
Width at bottom entrance	2	14'	Width at bottom inside	6	14'
Height left entrance	3	12'	Height left inside	7	12'
Height right entrance	4	12'	Height right inside	8	12'
Cover height above adit	9	30'-50'			
Type of Cover			Depth or Length	10	25'

TAG NO. _____

DATE _____

PAGE _____ OF _____

PHOTOGRAPH NUMBERS:

ROLL B-#25 C-#1,2,3

PICTURE(S) P28, P29, Both & Backsite

INVENTORIED BY

STATE OF UTAH
DEPARTMENT OF NATURAL RESOURCES
DIVISION OF OIL, GAS AND MINING

ADIT OR TUNNEL
FIELD DESCRIPTION FORM

FEATURE DESCRIPTION FORM
SHAFT or ADIT

Site ID: AMR / _____ / _____

Tag No: _____

CURRENT CONDITIONS:

Access to Feature *(check all that apply)*:
- ☐ no established trail
- ☐ foot trail
- ☐ ATV/motorcycle
- ■ 4-WD road
- ☐ 2-WD dirt road
- ☐ paved road
- ☐ rubber-tired backhoe
- ☐ crawler (track) equipment
- ☐ helicopter
- ☐ wilderness restrictions

Condition of Entrance:
- ☐ Completely collapsed, no access to workings
- ■ Partially collapsed or backfilled at portal, mine visible but not accessible
- ☐ Partially collapsed or backfilled at portal, mine workings accessible
- ☐ Portal open for access with little or no backfill or collapse
- ☐ Obstruction at opening makes evaluation of condition impossible
- ☐ Existing wall/fence/grate *(circle one)*
  - ☐ intact, acceptable
  - ☐ intact, unacceptable
  - ☐ damaged, mine accessible
- ☐ Shaft collar competent (rock or cribbing)
- ☐ Shaft collar sloughing
- ☐ Signs of interior visitation (litter/graffiti) present
- ☐ Other _____

Stability of Opening/Host Rock:
- ☐ unconsolidated soil (unstable)
- ☐ friable (unstable)
- ☐ highly jointed, fractured (unstable)
- ☐ somewhat jointed (fairly stable)
- ■ massive (stable, competent) (CONCRETE)

Depth to Competent Rock: _____ feet

Water *(check all that apply)*:
- ■ no water present
- ☐ dry, but appears to have occasional water
- ☐ seep/saturated soil (no flow)
- ☐ standing water in opening
- ☐ discharge flowing from opening
- ☐ discharge infiltrates w/in 50 ft of opening
- ☐ discharge flows into intermittent stream
- ☐ discharge flows into perennial stream
- ☐ water flows through/over waste rock
- ☐ water or ground surface discolored
- ☐ wetland vegetation present

Wildlife Observations In/Near Opening:
- ☐ bats: roosting/flying *(circle)*
- ☐ birds: nesting/roosting/flying *(circle)*
- ☐ guano/droppings/owl pellets
- ■ mammal tracks
- ☐ herps
- ■ none observed

Apparent depth of workings: _____ feet
- ■ terminus visible
- ☐ workings extend beyond visibility limits
- ☐ crosscuts, other workings visible

Roof or collar support present:
- ■ none visible
- ☐ wood props/caps (occasional)
- ☐ stulls or square sets
- ☐ box cribbing (continuous wood lining)
- ☐ log/timber cribbed shaft collar
- ☐ loose rock walls or cribbing
- ☐ concrete shaft collar or adit bulkhead
- ☐ support is failing

MITIGATION/DESIGN CONSIDERATIONS:

Potential Mitigation Actions *(check all that apply)*:
- ☐ Masonry Bulkhead
- ☐ Backfill
- ☐ Bulkhead & Backfill
- ☐ Standard Adit Grate
- ☐ Bat Grate
- ☐ Cable Net
- ☐ Locking Adit Door
- ☐ Shaft Grate
- ☐ PUF Shaft Plug
- ☐ Blast
- ☐ Probe for mine opening (caved adit)
- ☐ Drainage Provisions Required
- ■ Local Site Clean-up and Regrading
- ■ Structure Demolition
- ☐ Surface Water Drainage Control
- ☐ Cultural Features Needing Protection Present
- ☐ No Action Required
- ☐ Other _____

Onsite Construction Material Availability:
- ☐ Stone suitable for bulkhead (w/in 100 ft)
- ☐ Backfill
- ☐ Materials not present

Backfill Material Source:
- ☐ mine dump
- ☐ dig or scale down from brow/adjacent slope
- ☐ blast from rock brow or adjacent rock face
- ☐ other _____

Mine Dump Size:
- ☐ small (<20 cubic yards)
- ☐ medium (20 - 100 cubic yards)
- ☐ large (>100 cubic yards)
- ☐ USFS Criteria A3 (>500 cubic yards)

AMR / _____ / _____

AMR PROGRAM INVENTORY FORM

Site Name P 30

ADIT OPENING

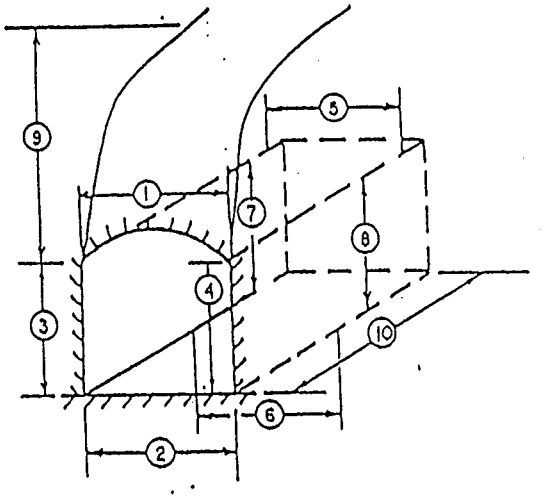

SITE SKETCH

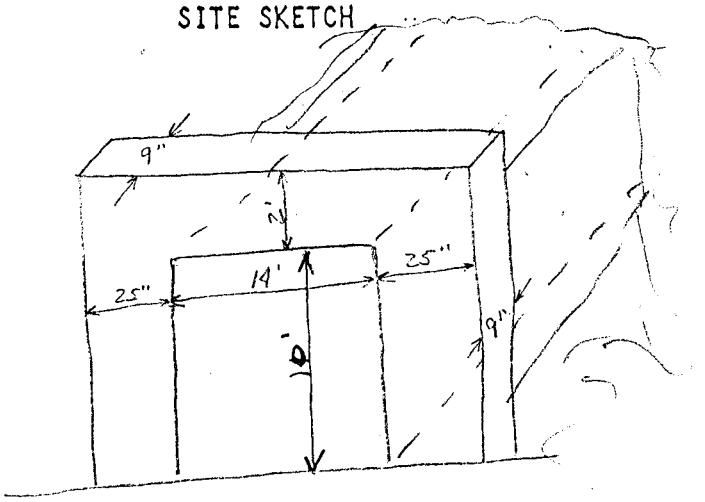

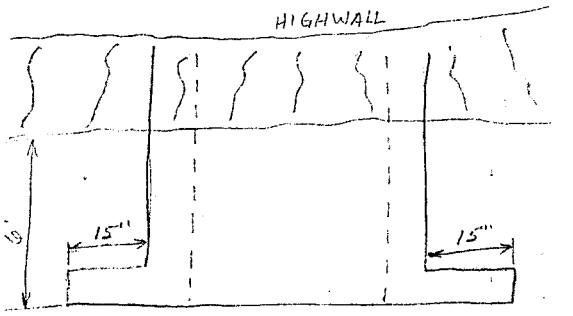

ENTRANCE MEASUREMENTS			_____ FEET INSIDE MEASUREMENTS		
Width at top entrance	1	14	Width at top inside	5	
Width at bottom entrance	2		Width at bottom inside	6	
Height left entrance	3	10	Height left inside	7	
Height right entrance	4		Height right inside	8	
Cover height above adit	9				
Type of Cover			Depth or Length	10	

TAG NO. _____

DATE _____

PAGE _____ OF _____

PHOTOGRAPH NUMBERS:

ROLL C

PICTURE(S) #4 & 5

INVENTORIED BY

STATE OF UTAH
DEPARTMENT OF NATURAL RESOURCES
DIVISION OF OIL, GAS AND MINING

ADIT OR TUNNEL
FIELD DESCRIPTION FORM

FEATURE DESCRIPTION FORM
SHAFT or ADIT

Site ID: AMR / _____ / _____

Tag No: _____

CURRENT CONDITIONS:

Access to Feature *(check all that apply)*:
- ☐ no established trail
- ☐ foot trail
- ☐ ATV/motorcycle
- ■ 4-WD road
- ☐ 2-WD dirt road
- ☐ paved road
- ☐ rubber-tired backhoe
- ☐ crawler (track) equipment
- ☐ helicopter
- ☐ wilderness restrictions

Condition of Entrance:
- ☐ Completely collapsed, no access to workings
- ● [redacted] backfilled at portal, mine visible but not accessible
- ☐ Partially collapsed or backfilled at portal, mine workings accessible
- ☐ Portal open for access with little or no backfill or collapse
- ☐ Obstruction at opening makes evaluation of condition impossible
- ☐ Existing wall/fence/grate *(circle one)*
  - ☐ intact, acceptable
  - ☐ intact, unacceptable
  - ☐ damaged, mine accessible
- ☐ Shaft collar competent (rock or cribbing)
- ☐ Shaft collar sloughing
- ☐ Signs of interior visitation (litter/graffiti) present
- ☐ Other _____

Stability of Opening/Host Rock:
- ☐ unconsolidated soil (unstable)
- ☐ friable (unstable)
- ☐ highly jointed, fractured (unstable)
- ☐ somewhat jointed (fairly stable)
- ● massive (stable, competent) CONC.

Depth to Competent Rock: _____ feet

Water *(check all that apply)*:
- ● no water present
- ☐ dry, but appears to have occasional water
- ☐ seep/saturated soil (no flow)
- ☐ standing water in opening
- ☐ discharge flowing from opening
- ☐ discharge infiltrates w/in 50 ft of opening
- ☐ discharge flows into intermittent stream
- ☐ discharge flows into perennial stream
- ☐ water flows through/over waste rock
- ☐ water or ground surface discolored
- ☐ wetland vegetation present

Wildlife Observations In/Near Opening:
- ☐ bats: roosting/flying *(circle)*
- ☐ birds: nesting/roosting/flying *(circle)*
- ☐ guano/droppings/owl pellets
- ● mammal tracks
- ☐ herps
- ☐ none observed

Apparent depth of workings: _____ feet
- ● terminus visible
- ☐ workings extend beyond visibility limits
- ☐ crosscuts, other workings visible

Roof or collar support present:
- ● none visible
- ☐ wood props/caps (occasional)
- ☐ stulls or square sets
- ☐ box cribbing (continuous wood lining)
- ☐ log/timber cribbed shaft collar
- ☐ loose rock walls or cribbing
- ☐ concrete shaft collar or adit bulkhead
- ☐ support is failing

MITIGATION/DESIGN CONSIDERATIONS:

Potential Mitigation Actions *(check all that apply)*:
- ☐ Masonry Bulkhead
- ☐ Backfill
- ☐ Bulkhead & Backfill
- ☐ Standard Adit Grate
- ☐ Bat Grate
- ☐ Cable Net
- ☐ Locking Adit Door
- ☐ Shaft Grate
- ☐ PUF Shaft Plug
- ☐ Blast
- ☐ Probe for mine opening (caved adit)
- ☐ Drainage Provisions Required
- ☐ Local Site Clean-up and Regrading
- ☐ Structure Demolition
- ☐ Surface Water Drainage Control
- ☐ Cultural Features Needing Protection Present
- ☐ No Action Required
- ☐ Other _____

Onsite Construction Material Availability:
- ☐ Stone suitable for bulkhead (w/in 100 ft)
- ☐ Backfill
- ☐ Materials not present

Backfill Material Source:
- ☐ mine dump
- ☐ dig or scale down from brow/adjacent slope
- ☐ blast from rock brow or adjacent rock face
- ☐ other _____

Mine Dump Size:
- ☐ small (<20 cubic yards)
- ☐ medium (20 - 100 cubic yards)
- ☐ large (>100 cubic yards)
- ☐ USFS Criteria A3 (>500 cubic yards)

AMR / _____ / _____

AMR PROGRAM INVENTORY FORM

Site Name P 31

ADIT OPENING

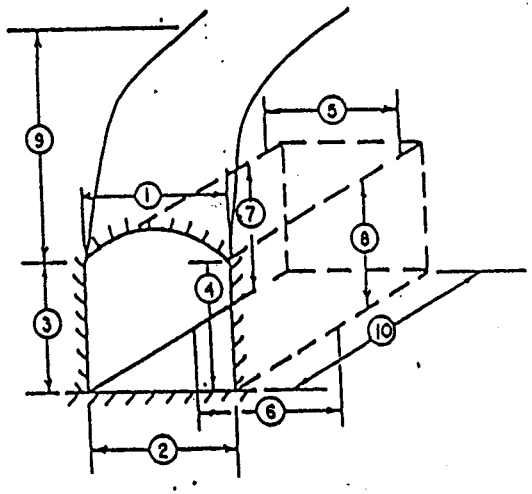

SITE SKETCH

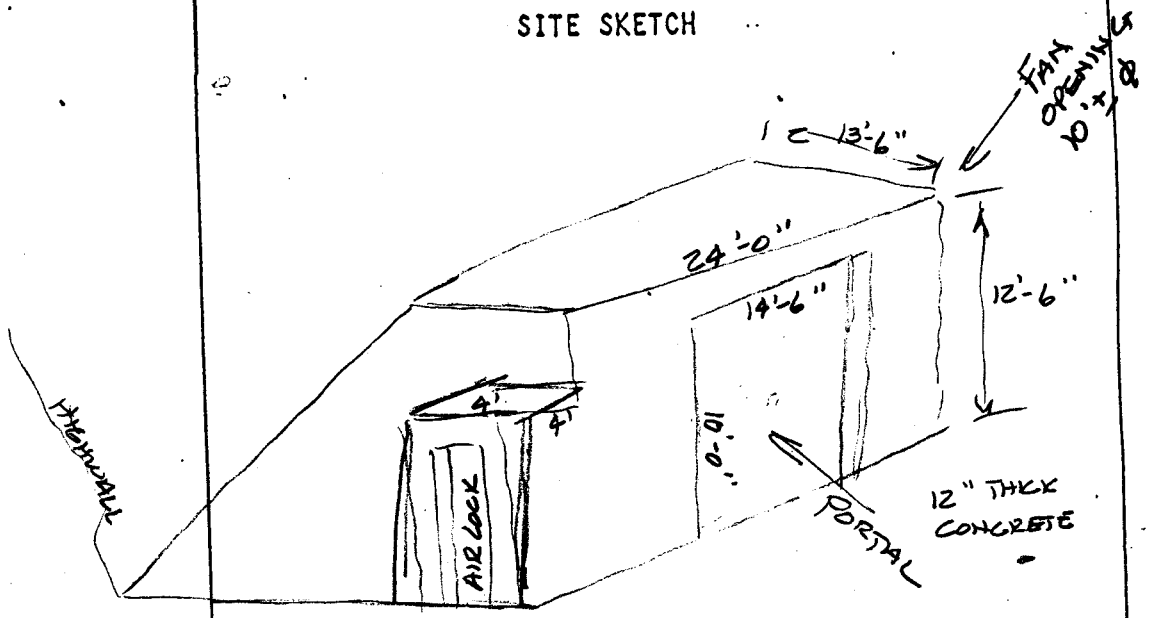

Portal is sealed & Backfilled inside Concrete Housing

ENTRANCE MEASUREMENTS			_____ FEET INSIDE MEASUREMENTS		
Width at top entrance	1	14' 6"	Width at top inside	5	
Width at bottom entrance	2		Width at bottom inside	6	
Height left entrance	3		Height left inside	7	
Height right entrance	4	10' 0"	Height right inside	8	
Cover height above adit	9				
Type of Cover			Depth or Length	10	

TAG NO. _____

DATE _____

PAGE _____ OF _____

PHOTOGRAPH NUMBERS:

ROLL _____

PICTURE(S) _____

INVENTORIED BY

STATE OF UTAH
DEPARTMENT OF NATURAL RESOURCES
DIVISION OF OIL, GAS AND MINING

ADIT OR TUNNEL
FIELD DESCRIPTION FORM

FEATURE DESCRIPTION FORM
SHAFT or ADIT

Site ID: AMR / _____ / _____

Tag No: _____

CURRENT CONDITIONS:

Access to Feature *(check all that apply)*:
- ☐ no established trail
- ☐ foot trail
- ☐ ATV/motorcycle
- ☒ 4-WD road
- ☐ 2-WD dirt road
- ☐ paved road
- ☐ rubber-tired backhoe
- ☐ crawler (track) equipment
- ☐ helicopter
- ☐ wilderness restrictions

Condition of Entrance:
- ☐ Completely collapsed, no access to workings
- ☒ Partially collapsed or backfilled at portal, mine visible but not accessible
- ☐ Partially collapsed or backfilled at portal, mine workings accessible
- ☐ Portal open for access with little or no backfill or collapse
- ☐ Obstruction at opening makes evaluation of condition impossible
- ☐ Existing wall/fence/grate *(circle one)*
  - ☐ intact, acceptable
  - ☐ intact, unacceptable
  - ☐ damaged, mine accessible
- ☐ Shaft collar competent (rock or cribbing)
- ☐ Shaft collar sloughing
- ☐ Signs of interior visitation (litter/graffiti) present
- ☒ Other ENTRANCE SEALED INBY

Stability of Opening/Host Rock:
- ☐ unconsolidated soil (unstable)
- ☐ friable (unstable)
- ☐ highly jointed, fractured (unstable)
- ☐ somewhat jointed (fairly stable)
- ☒ massive (stable, competent) (CONCRETE)

Depth to Competent Rock: _____ feet

Water *(check all that apply)*:
- ☒ no water present
- ☐ dry, but appears to have occasional water
- ☐ seep/saturated soil (no flow)
- ☐ standing water in opening
- ☐ discharge flowing from opening
- ☐ discharge infiltrates w/in 50 ft of opening
- ☐ discharge flows into intermittent stream
- ☐ discharge flows into perennial stream
- ☐ water flows through/over waste rock
- ☐ water or ground surface discolored
- ☐ wetland vegetation present

Wildlife Observations In/Near Opening:
- ☐ bats: roosting/flying *(circle)*
- ☐ birds: nesting/roosting/flying *(circle)*
- ☐ guano/droppings/owl pellets
- ☐ mammal tracks
- ☐ herps
- ☒ none observed

Apparent depth of workings: _____ feet
- ☒ terminus visible (blind)
- ☐ workings extend beyond visibility limits
- ☐ crosscuts, other workings visible

Roof or collar support present:
- ☒ none visible
- ☐ wood props/caps (occasional)
- ☐ stulls or square sets
- ☐ box cribbing (continuous wood lining)
- ☐ log/timber cribbed shaft collar
- ☐ loose rock walls or cribbing
- ☐ concrete shaft collar or adit bulkhead
- ☐ support is failing

MITIGATION/DESIGN CONSIDERATIONS:

Potential Mitigation Actions *(check all that apply)*:
- ☐ Masonry Bulkhead
- ☐ Backfill
- ☐ Bulkhead & Backfill
- ☐ Standard Adit Grate
- ☐ Bat Grate
- ☐ Cable Net
- ☐ Locking Adit Door
- ☐ Shaft Grate
- ☐ PUF Shaft Plug
- ☐ Blast
- ☐ Probe for mine opening (caved adit)
- ☐ Drainage Provisions Required
- ☐ Local Site Clean-up and Regrading
- ☐ Structure Demolition
- ☐ Surface Water Drainage Control
- ☐ Cultural Features Needing Protection Present
- ☐ No Action Required
- ☐ Other _____

Onsite Construction Material Availability:
- ☐ Stone suitable for bulkhead (w/in 100 ft)
- ☐ Backfill
- ☐ Materials not present

Backfill Material Source:
- ☐ mine dump
- ☐ dig or scale down from brow/adjacent slope
- ☐ blast from rock brow or adjacent rock face
- ☐ other _____

Mine Dump Size:
- ☐ small (<20 cubic yards)
- ☐ medium (20 - 100 cubic yards)
- ☐ large (>100 cubic yards)
- ☐ USFS Criteria A3 (>500 cubic yards)

AMR / _____ / _____

AMR PROGRAM INVENTORY FORM

Site Name P 32

ADIT OPENING

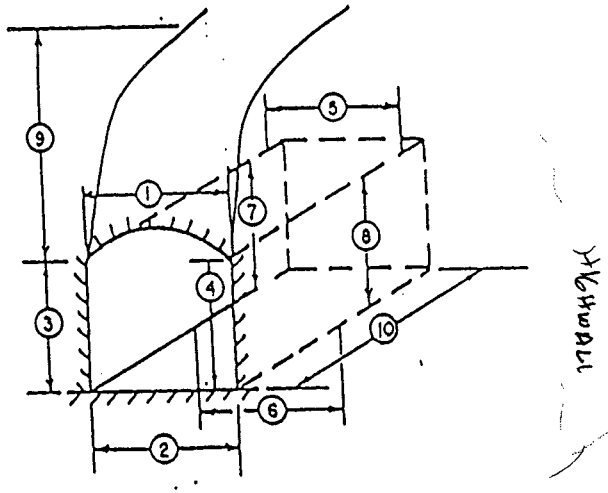

SITE SKETCH

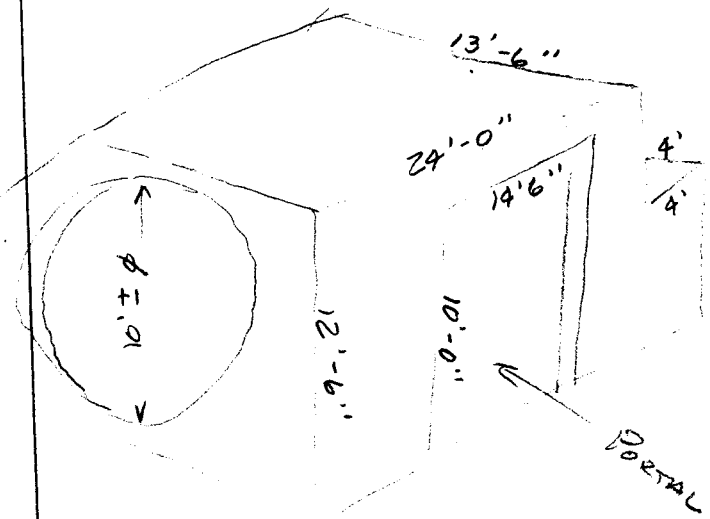

Portal is sealed & Backfilled inside Concrete Housing

Concrete is 12" thick

ENTRANCE MEASUREMENTS			_____ FEET INSIDE MEASUREMENTS		
Width at top entrance	1	14'-6"	Width at top inside	5	
Width at bottom entrance	2		Width at bottom inside	6	
Height left entrance	3		Height left inside	7	
Height right entrance	4	10'-0"	Height right inside	8	
Cover height above adit	9				
Type of Cover			Depth or Length	10	

TAG NO. _____

DATE _____

PAGE _____ OF _____

PHOTOGRAPH NUMBERS:

ROLL _____

PICTURE(S) _____

INVENTORIED BY

STATE OF UTAH
DEPARTMENT OF NATURAL RESOURCES
DIVISION OF OIL, GAS AND MINING

ADIT OR TUNNEL
FIELD DESCRIPTION FORM

FEATURE DESCRIPTION FORM
SHAFT or ADIT

Site ID: AMR / _____ / _____

Tag No: _____

CURRENT CONDITIONS:

Access to Feature *(check all that apply)*:
- ☐ no established trail
- ☐ foot trail
- ☐ ATV/motorcycle
- ☒ 4-WD road
- ☐ 2-WD dirt road
- ☐ paved road
- ☐ rubber-tired backhoe
- ☐ crawler (track) equipment
- ☐ helicopter
- ☐ wilderness restrictions

Condition of Entrance:
- ☐ Completely collapsed, no access to workings
- ☒ Partially collapsed or backfilled at portal, mine visible but not accessible
- ☐ Partially collapsed or backfilled at portal, mine workings accessible
- ☐ Portal open for access with little or no backfill or collapse
- ☐ Obstruction at opening makes evaluation of condition impossible
- ☐ Existing wall/fence/grate *(circle one)*
  - ☐ intact, acceptable
  - ☐ intact, unacceptable
  - ☐ damaged, mine accessible
- ☐ Shaft collar competent (rock or cribbing)
- ☐ Shaft collar sloughing
- ☐ Signs of interior visitation (litter/graffiti) present
- ☒ Other ENTRANCE SEALED INBY

Stability of Opening/Host Rock:
- ☐ unconsolidated soil (unstable)
- ☐ friable (unstable)
- ☐ highly jointed, fractured (unstable)
- ☐ somewhat jointed (fairly stable)
- ☒ massive (stable, competent) Concrete

Depth to Competent Rock: _____ feet

Water *(check all that apply)*:
- ☒ no water present
- ☐ dry, but appears to have occasional water
- ☐ seep/saturated soil (no flow)
- ☐ standing water in opening
- ☐ discharge flowing from opening
- ☐ discharge infiltrates w/in 50 ft of opening
- ☐ discharge flows into intermittent stream
- ☐ discharge flows into perennial stream
- ☐ water flows through/over waste rock
- ☐ water or ground surface discolored
- ☐ wetland vegetation present

Wildlife Observations In/Near Opening:
- ☐ bats: roosting/flying *(circle)*
- ☐ birds: nesting/roosting/flying *(circle)*
- ☐ guano/droppings/owl pellets
- ☐ mammal tracks
- ☐ herps
- ☒ none observed

Apparent depth of workings: _____ feet
- ☒ terminus visible (seal)
- ☐ workings extend beyond visibility limits
- ☐ crosscuts, other workings visible

Roof or collar support present:
- ☒ none visible
- ☐ wood props/caps (occasional)
- ☐ stulls or square sets
- ☐ box cribbing (continuous wood lining)
- ☐ log/timber cribbed shaft collar
- ☐ loose rock walls or cribbing
- ☐ concrete shaft collar or adit bulkhead
- ☐ support is failing

MITIGATION/DESIGN CONSIDERATIONS:

Potential Mitigation Actions *(check all that apply)*:
- ☐ Masonry Bulkhead
- ☐ Backfill
- ☐ Bulkhead & Backfill
- ☐ Standard Adit Grate
- ☐ Bat Grate
- ☐ Cable Net
- ☐ Locking Adit Door
- ☐ Shaft Grate
- ☐ PUF Shaft Plug
- ☐ Blast
- ☐ Probe for mine opening (caved adit)
- ☐ Drainage Provisions Required
- ☐ Local Site Clean-up and Regrading
- ☐ Structure Demolition
- ☐ Surface Water Drainage Control
- ☐ Cultural Features Needing Protection Present
- ☐ No Action Required
- ☐ Other _____

Onsite Construction Material Availability:
- ☐ Stone suitable for bulkhead (w/in 100 ft)
- ☐ Backfill
- ☐ Materials not present

Backfill Material Source:
- ☐ mine dump
- ☐ dig or scale down from brow/adjacent slope
- ☐ blast from rock brow or adjacent rock face
- ☐ other _____

Mine Dump Size:
- ☐ small (<20 cubic yards)
- ☐ medium (20 - 100 cubic yards)
- ☐ large (>100 cubic yards)
- ☐ USFS Criteria A3 (>500 cubic yards)

AMR / _____ / _____

AMR PROGRAM INVENTORY FORM

Site Name P 33

ADIT OPENING

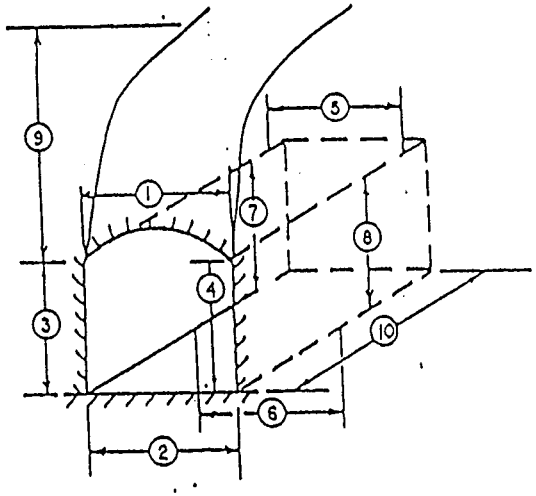

SITE SKETCH

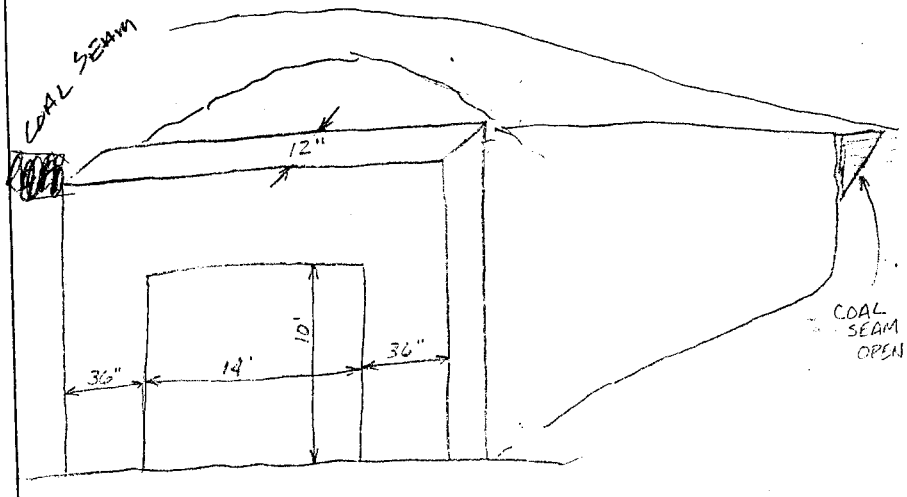

ENTRANCE MEASUREMENTS			_____ FEET INSIDE MEASUREMENTS		
Width at top entrance	1	14	Width at top inside	5	
Width at bottom entrance	2		Width at bottom inside	6	
Height left entrance	3	10	Height left inside	7	
Height right entrance	4		Height right inside	8	
Cover height above adit	9				
Type of Cover			Depth or Length	10	

TAG NO. _____

DATE _____

PAGE _____ OF _____

PHOTOGRAPH NUMBERS:

ROLL C

PICTURE(S) #10 & 11

INVENTORIED BY

STATE OF UTAH
DEPARTMENT OF NATURAL RESOURCES
DIVISION OF OIL, GAS AND MINING

ADIT OR TUNNEL
FIELD DESCRIPTION FORM

FEATURE DESCRIPTION FORM
SHAFT or ADIT

Site ID: AMR / _____ / _____

Tag No: _____

CURRENT CONDITIONS:

Access to Feature *(check all that apply)*:
- ☐ no established trail
- ☐ foot trail
- ☐ ATV/motorcycle
- ● 4-WD road
- ☐ 2-WD dirt road
- ☐ paved road
- ☐ rubber-tired backhoe
- ☐ crawler (track) equipment
- ☐ helicopter
- ☐ wilderness restrictions

Condition of Entrance:
- ☐ Completely collapsed, no access to workings
- ● [redacted] backfilled at portal, mine visible but not accessible
- ☐ Partially collapsed or backfilled at portal, mine workings accessible
- ☐ Portal open for access with little or no backfill or collapse
- ☐ Obstruction at opening makes evaluation of condition impossible
- ☐ Existing wall/fence/grate *(circle one)*
  - ☐ intact, acceptable
  - ☐ intact, unacceptable
  - ☐ damaged, mine accessible
- ☐ Shaft collar competent (rock or cribbing)
- ☐ Shaft collar sloughing
- ☐ Signs of interior visitation (litter/graffiti) present
- ☐ Other _____

Stability of Opening/Host Rock:
- ☐ unconsolidated soil (unstable)
- ● friable (unstable) AT HIGHWALL
- ☐ highly jointed, fractured (unstable)
- ☐ somewhat jointed (fairly stable)
- ☐ massive (stable, competent)

Depth to Competent Rock: _____ feet

Water *(check all that apply)*:
- ● no water present
- ☐ dry, but appears to have occasional water
- ☐ seep/saturated soil (no flow)
- ☐ standing water in opening
- ☐ discharge flowing from opening
- ☐ discharge infiltrates w/in 50 ft of opening
- ☐ discharge flows into intermittent stream
- ☐ discharge flows into perennial stream
- ☐ water flows through/over waste rock
- ☐ water or ground surface discolored
- ☐ wetland vegetation present

Wildlife Observations In/Near Opening:
- ☐ bats: roosting/flying *(circle)*
- ☐ birds: nesting/roosting/flying *(circle)*
- ☐ guano/droppings/owl pellets
- ☐ mammal tracks
- ☐ herps
- ● none observed

Apparent depth of workings: _____ feet
- ● terminus visible
- ☐ workings extend beyond visibility limits
- ☐ crosscuts, other workings visible

Roof or collar support present:
- ☐ none visible
- ☐ wood props/caps (occasional)
- ☐ stulls or square sets
- ☐ box cribbing (continuous wood lining)
- ☐ log/timber cribbed shaft collar
- ☐ loose rock walls or cribbing
- ☐ concrete shaft collar or adit bulkhead
- ☐ support is failing

MITIGATION/DESIGN CONSIDERATIONS:

Potential Mitigation Actions *(check all that apply)*:
- ☐ Masonry Bulkhead
- ☐ Backfill
- ☐ Bulkhead & Backfill
- ☐ Standard Adit Grate
- ☐ Bat Grate
- ☐ Cable Net
- ☐ Locking Adit Door
- ☐ Shaft Grate
- ☐ PUF Shaft Plug
- ☐ Blast
- ☐ Probe for mine opening (caved adit)
- ☐ Drainage Provisions Required
- ☐ Local Site Clean-up and Regrading
- ☐ Structure Demolition
- ☐ Surface Water Drainage Control
- ☐ Cultural Features Needing Protection Present
- ☐ No Action Required
- ☐ Other _____

Onsite Construction Material Availability:
- ☐ Stone suitable for bulkhead (w/in 100 ft)
- ☐ Backfill
- ☐ Materials not present

Backfill Material Source:
- ☐ mine dump
- ☐ dig or scale down from brow/adjacent slope
- ☐ blast from rock brow or adjacent rock face
- ☐ other _____

Mine Dump Size:
- ☐ small (<20 cubic yards)
- ☐ medium (20 - 100 cubic yards)
- ☐ large (>100 cubic yards)
- ☐ USFS Criteria A3 (>500 cubic yards)

AMR / _____ / _____

AMR PROGRAM INVENTORY FORM

Site Name P34

ADIT OPENING

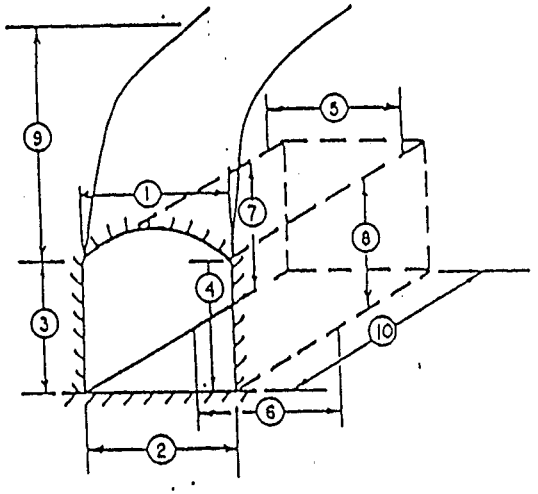

ENTRANCE MEASUREMENTS			_____ FEET INSIDE MEASUREMENTS		
Width at top entrance	1	8	Width at top inside	5	
Width at bottom entrance	2		Width at bottom inside	6	
Height left entrance	3	7	Height left inside	7	
Height right entrance	4		Height right inside	8	
Cover height above adit	9				
Type of Cover			Depth or Length	10	

SITE SKETCH

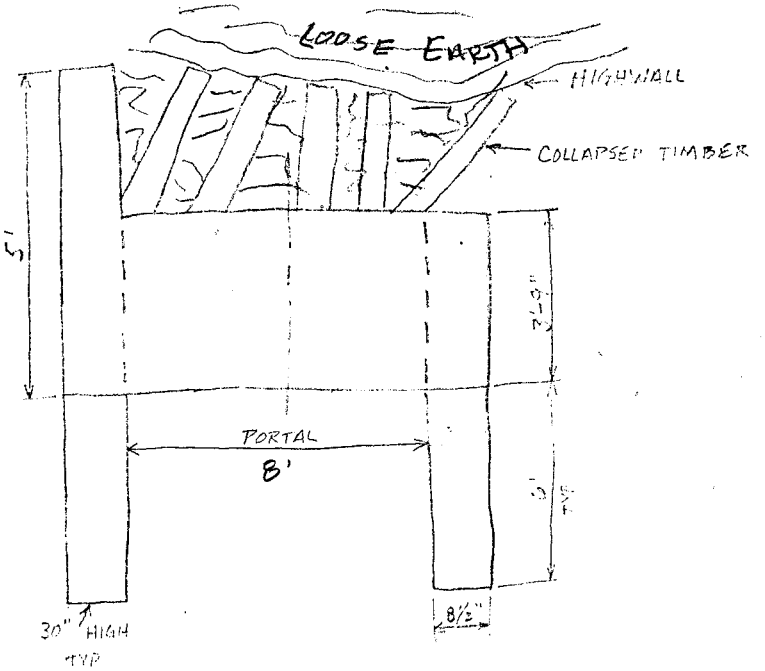

TAG NO. _____

DATE _____

PAGE _____ OF _____

PHOTOGRAPH NUMBERS:

ROLL C

PICTURE(S) 16, 17, 18

INVENTORIED BY

STATE OF UTAH
DEPARTMENT OF NATURAL RESOURCES
DIVISION OF OIL, GAS AND MINING

ADIT OR TUNNEL
FIELD DESCRIPTION FORM

FEATURE DESCRIPTION FORM
SHAFT or ADIT

Site ID: AMR / _____ / _____

Tag No: _____

CURRENT CONDITIONS:

Access to Feature *(check all that apply)*:
- ☐ no established trail
- ☐ foot trail
- ☐ ATV/motorcycle
- ☐ 4-WD road
- ☐ 2-WD dirt road
- ☐ paved road
- ☐ rubber-tired backhoe
- ☐ crawler (track) equipment
- ☐ helicopter
- ☐ wilderness restrictions

Condition of Entrance:
- ☐ Completely collapsed, no access to workings
- ☐ Partially collapsed or backfilled at portal, mine visible but not accessible
- ☐ Partially collapsed or backfilled at portal, mine workings accessible
- ☐ Portal open for access with little or no backfill or collapse
- ☐ Obstruction at opening makes evaluation of condition impossible
- ☐ Existing wall/fence/grate *(circle one)*
  - ☐ intact, acceptable
  - ☐ intact, unacceptable
  - ☐ damaged, mine accessible
- ☐ Shaft collar competent (rock or cribbing)
- ☐ Shaft collar sloughing
- ☐ Signs of interior visitation (litter/graffiti) present
- ☐ Other _____

Stability of Opening/Host Rock:
- ☐ unconsolidated soil (unstable)
- ☐ friable (unstable)
- ☐ highly jointed, fractured (unstable)
- ☐ somewhat jointed (fairly stable)
- ☐ massive (stable, competent)

Depth to Competent Rock: _____ feet

Water *(check all that apply)*:
- ☐ no water present
- ☐ dry, but appears to have occasional water
- ☐ seep/saturated soil (no flow)
- ☐ standing water in opening
- ☐ discharge flowing from opening
- ☐ discharge infiltrates w/in 50 ft of opening
- ☐ discharge flows into intermittent stream
- ☐ discharge flows into perennial stream
- ☐ water flows through/over waste rock
- ☐ water or ground surface discolored
- ☐ wetland vegetation present

Wildlife Observations In/Near Opening:
- ☐ bats: roosting/flying *(circle)*
- ☐ birds: nesting/roosting/flying *(circle)*
- ☐ guano/droppings/owl pellets
- ☐ mammal tracks
- ☐ herps
- ☐ none observed

Apparent depth of workings: _____ feet
- ☐ terminus visible
- ☐ workings extend beyond visibility limits
- ☐ crosscuts, other workings visible

Roof or collar support present:
- ☐ none visible
- ☐ wood props/caps (occasional)
- ☐ stulls or square sets
- ☐ box cribbing (continuous wood lining)
- ☐ log/timber cribbed shaft collar
- ☐ loose rock walls or cribbing
- ☐ concrete shaft collar or adit bulkhead
- ☐ support is failing

MITIGATION/DESIGN CONSIDERATIONS:

Potential Mitigation Actions *(check all that apply)*:
- ☐ Masonry Bulkhead
- ☐ Backfill
- ☐ Bulkhead & Backfill
- ☐ Standard Adit Grate
- ☐ Bat Grate
- ☐ Cable Net
- ☐ Locking Adit Door
- ☐ Shaft Grate
- ☐ PUF Shaft Plug
- ☐ Blast
- ☐ Probe for mine opening (caved adit)
- ☐ Drainage Provisions Required
- ☐ Local Site Clean-up and Regrading
- ☐ Structure Demolition
- ☐ Surface Water Drainage Control
- ☐ Cultural Features Needing Protection Present
- ☐ No Action Required
- ☐ Other _____

Onsite Construction Material Availability:
- ☐ Stone suitable for bulkhead (w/in 100 ft)
- ☐ Backfill
- ☐ Materials not present

Backfill Material Source:
- ☐ mine dump
- ☐ dig or scale down from brow/adjacent slope
- ☐ blast from rock brow or adjacent rock face
- ☐ other _____

Mine Dump Size:
- ☐ small (<20 cubic yards)
- ☐ medium (20 - 100 cubic yards)
- ☐ large (>100 cubic yards)
- ☐ USFS Criteria A3 (>500 cubic yards)

AMR / _____ / _____

AMR PROGRAM INVENTORY FORM

Site Name P 35

ADIT OPENING

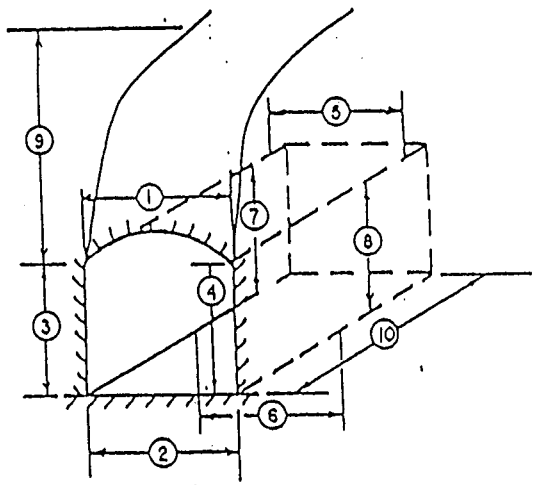

SITE SKETCH

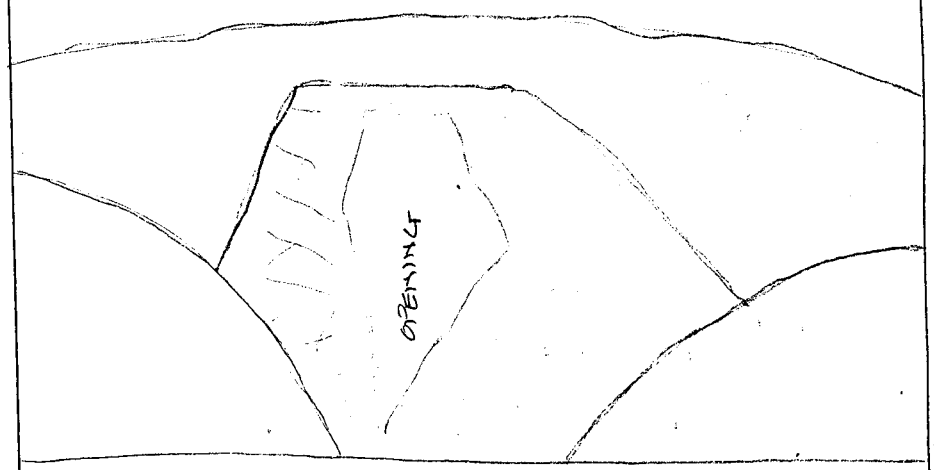

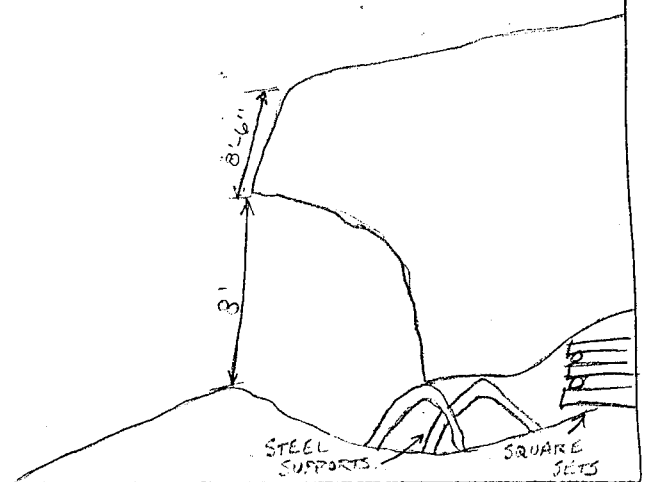

ENTRANCE MEASUREMENTS			_____ FEET INSIDE MEASUREMENTS		
Width at top entrance	1	7'	Width at top inside	5	4'
Width at bottom entrance	2	10.5'	Width at bottom inside	6	5'
Height left entrance	3	8'	Height left inside	7	4'
Height right entrance	4	7'	Height right inside	8	4'
Cover height above adit	9	8.5'			
Type of Cover		FRIABLE SANDSTONE	Depth or Length	10	??

TAG NO. P 35 14/9 30 H01

DATE 8/20/97

PAGE _____ OF _____

PHOTOGRAPH NUMBERS:

ROLL C

PICTURE(S) 22 & 23

INVENTORIED BY

STATE OF UTAH
DEPARTMENT OF NATURAL RESOURCES
DIVISION OF OIL, GAS AND MINING

ADIT OR TUNNEL
FIELD DESCRIPTION FORM

FEATURE DESCRIPTION FORM
SHAFT or ADIT

Site ID: AMR / _____ / _____

Tag No: _____

CURRENT CONDITIONS:

Access to Feature *(check all that apply)*:
- ■ no established trail
- □ foot trail
- □ ATV/motorcycle
- □ 4-WD road
- □ 2-WD dirt road
- □ paved road
- □ rubber-tired backhoe
- □ crawler (track) equipment
- □ helicopter
- □ wilderness restrictions

Condition of Entrance:
- □ Completely collapsed, no access to workings
- □ Partially collapsed or backfilled at portal, mine visible but not accessible
- □ Partially collapsed or backfilled at portal, mine workings accessible
- ■ Portal open for access with little or no backfill or collapse
- □ Obstruction at opening makes evaluation of condition impossible
- □ Existing wall/fence/grate *(circle one)*
  - □ intact, acceptable
  - □ intact, unacceptable
  - □ damaged, mine accessible
- □ Shaft collar competent (rock or cribbing)
- □ Shaft collar sloughing
- □ Signs of interior visitation (litter/graffiti) present
- □ Other _____

Stability of Opening/Host Rock:
- □ unconsolidated soil (unstable)
- □ friable (unstable)
- ■ highly jointed, fractured (unstable)
- □ somewhat jointed (fairly stable)
- □ massive (stable, competent)

Depth to Competent Rock: _____ feet

Water *(check all that apply)*:
- ■ no water present
- □ dry, but appears to have occasional water
- □ seep/saturated soil (no flow)
- □ standing water in opening
- □ discharge flowing from opening
- □ discharge infiltrates w/in 50 ft of opening
- □ discharge flows into intermittent stream
- □ discharge flows into perennial stream
- □ water flows through/over waste rock
- □ water or ground surface discolored
- □ wetland vegetation present

Wildlife Observations In/Near Opening:
- □ bats: roosting/flying *(circle)*
- □ birds: nesting/roosting/flying *(circle)*
- □ guano/droppings/owl pellets
- □ mammal tracks
- □ herps
- ■ none observed

Apparent depth of workings: _____ feet
- □ terminus visible
- ■ workings extend beyond visibility limits
- □ crosscuts, other workings visible

Roof or collar support present:
- □ none visible
- □ wood props/caps (occasional)
- □ stulls or square sets
- □ box cribbing (continuous wood lining)
- □ log/timber cribbed shaft collar
- □ loose rock walls or cribbing
- □ concrete shaft collar or adit bulkhead
- ■ support is failing

MITIGATION/DESIGN CONSIDERATIONS:

Potential Mitigation Actions *(check all that apply)*:
- □ Masonry Bulkhead
- □ Backfill
- □ Bulkhead & Backfill
- □ Standard Adit Grate
- □ Bat Grate
- □ Cable Net
- □ Locking Adit Door
- □ Shaft Grate
- □ PUF Shaft Plug
- □ Blast
- □ Probe for mine opening (caved adit)
- □ Drainage Provisions Required
- □ Local Site Clean-up and Regrading
- □ Structure Demolition
- □ Surface Water Drainage Control
- □ Cultural Features Needing Protection Present
- □ No Action Required
- □ Other _____

Onsite Construction Material Availability:
- □ Stone suitable for bulkhead (w/in 100 ft)
- □ Backfill
- □ Materials not present

Backfill Material Source:
- □ mine dump
- □ dig or scale down from brow/adjacent slope
- □ blast from rock brow or adjacent rock face
- □ other _____

Mine Dump Size:
- □ small (<20 cubic yards)
- □ medium (20 - 100 cubic yards)
- □ large (>100 cubic yards)
- □ USFS Criteria A3 (>500 cubic yards)

AMR / _____ / _____

AMR PROGRAM INVENTORY FORM

Site Name P 36

ADIT OPENING

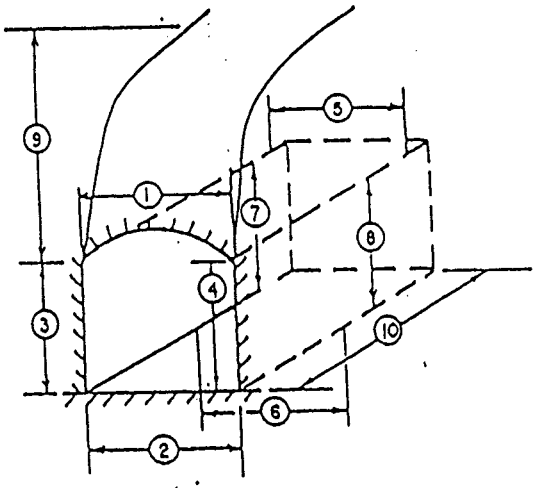

ENTRANCE MEASUREMENTS			_____ FEET INSIDE MEASUREMENTS		
Width at top entrance	1	8'	Width at top inside	5	~8'
Width at bottom entrance	2	8'	Width at bottom inside	6	~8'
Height left entrance	3	6	Height left inside	7	~6'
Height right entrance	4	6	Height right inside	8	~6'
Cover height above adit	9	~3' BUT INCREASES QUICKLY			
Type of Cover			Depth or Length	10	~80'

SITE SKETCH

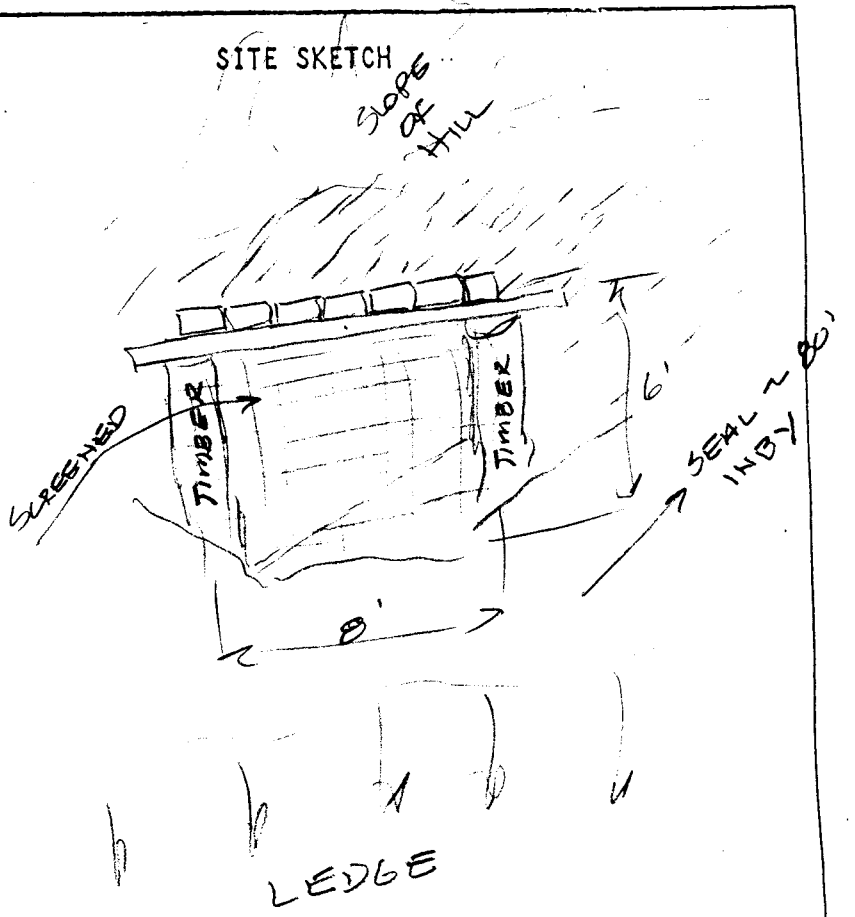

TAG NO. _____

DATE _____

PAGE _____ OF _____

PHOTOGRAPH NUMBERS:

ROLL _____

PICTURE(S) _____

INVENTORIED BY

STATE OF UTAH
DEPARTMENT OF NATURAL RESOURCES
DIVISION OF OIL, GAS AND MINING

ADIT OR TUNNEL
FIELD DESCRIPTION FORM

FEATURE DESCRIPTION FORM
SHAFT or ADIT

Site ID: AMR / _____ / _____

Tag No: _____

CURRENT CONDITIONS:

Access to Feature *(check all that apply)*:
- [x] no established trail
- [ ] foot trail
- [ ] ATV/motorcycle
- [ ] 4-WD road
- [ ] 2-WD dirt road
- [ ] paved road
- [ ] rubber-tired backhoe
- [ ] crawler (track) equipment
- [ ] helicopter
- [ ] wilderness restrictions

Condition of Entrance:
- [ ] Completely collapsed, no access to workings
- [ ] Partially collapsed or backfilled at portal, mine visible but not accessible
- [ ] Partially collapsed or backfilled at portal, mine workings accessible
- [x] Portal open for access with little or no backfill or collapse (To SEAL)
- [ ] Obstruction at opening makes evaluation of condition impossible
- [ ] Existing wall/fence/grate *(circle one)*
  - [ ] intact, acceptable
  - [ ] intact, unacceptable
  - [ ] damaged, mine accessible
- [ ] Shaft collar competent (rock or cribbing)
- [ ] Shaft collar sloughing
- [ ] Signs of interior visitation (litter/graffiti) present
- [ ] Other _____

Stability of Opening/Host Rock:
- [ ] unconsolidated soil (unstable)
- [x] friable (unstable)
- [ ] highly jointed, fractured (unstable)
- [ ] somewhat jointed (fairly stable)
- [ ] massive (stable, competent)

Depth to Competent Rock: _____ feet

Water *(check all that apply)*:
- [x] no water present
- [ ] dry, but appears to have occasional water
- [ ] seep/saturated soil (no flow)
- [ ] standing water in opening
- [ ] discharge flowing from opening
- [ ] discharge infiltrates w/in 50 ft of opening
- [ ] discharge flows into intermittent stream
- [ ] discharge flows into perennial stream
- [ ] water flows through/over waste rock
- [ ] water or ground surface discolored
- [ ] wetland vegetation present

Wildlife Observations In/Near Opening:
- [ ] bats: roosting/flying *(circle)*
- [ ] birds: nesting/roosting/flying *(circle)*
- [ ] guano/droppings/owl pellets
- [ ] mammal tracks
- [ ] herps
- [ ] none observed

Apparent depth of workings: _____ feet
- [x] terminus visible (SEAL)
- [ ] workings extend beyond visibility limits
- [ ] crosscuts, other workings visible

Roof or collar support present:
- [ ] none visible
- [x] wood props/caps (occasional)
- [x] stulls or square sets
- [ ] box cribbing (continuous wood lining)
- [ ] log/timber cribbed shaft collar
- [ ] loose rock walls or cribbing
- [ ] concrete shaft collar or adit bulkhead
- [ ] support is failing

MITIGATION/DESIGN CONSIDERATIONS:

Potential Mitigation Actions *(check all that apply)*:
- [ ] Masonry Bulkhead
- [ ] Backfill
- [ ] Bulkhead & Backfill
- [ ] Standard Adit Grate
- [ ] Bat Grate
- [ ] Cable Net
- [ ] Locking Adit Door
- [ ] Shaft Grate
- [ ] PUF Shaft Plug
- [ ] Blast
- [ ] Probe for mine opening (caved adit)
- [ ] Drainage Provisions Required
- [ ] Local Site Clean-up and Regrading
- [ ] Structure Demolition
- [ ] Surface Water Drainage Control
- [ ] Cultural Features Needing Protection Present
- [ ] No Action Required
- [ ] Other _____

Onsite Construction Material Availability:
- [ ] Stone suitable for bulkhead (w/in 100 ft)
- [ ] Backfill
- [ ] Materials not present

Backfill Material Source:
- [ ] mine dump
- [ ] dig or scale down from brow/adjacent slope
- [ ] blast from rock brow or adjacent rock face
- [ ] other _____

Mine Dump Size:
- [ ] small (<20 cubic yards)
- [ ] medium (20 - 100 cubic yards)
- [ ] large (>100 cubic yards)
- [ ] USFS Criteria A3 (>500 cubic yards)

AMR / _____ / _____

AMR PROGRAM INVENTORY FORM

Site Name P 37

ADIT OPENING

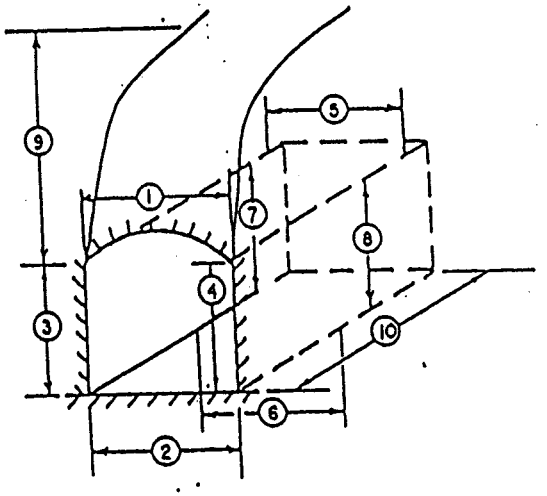

SITE SKETCH

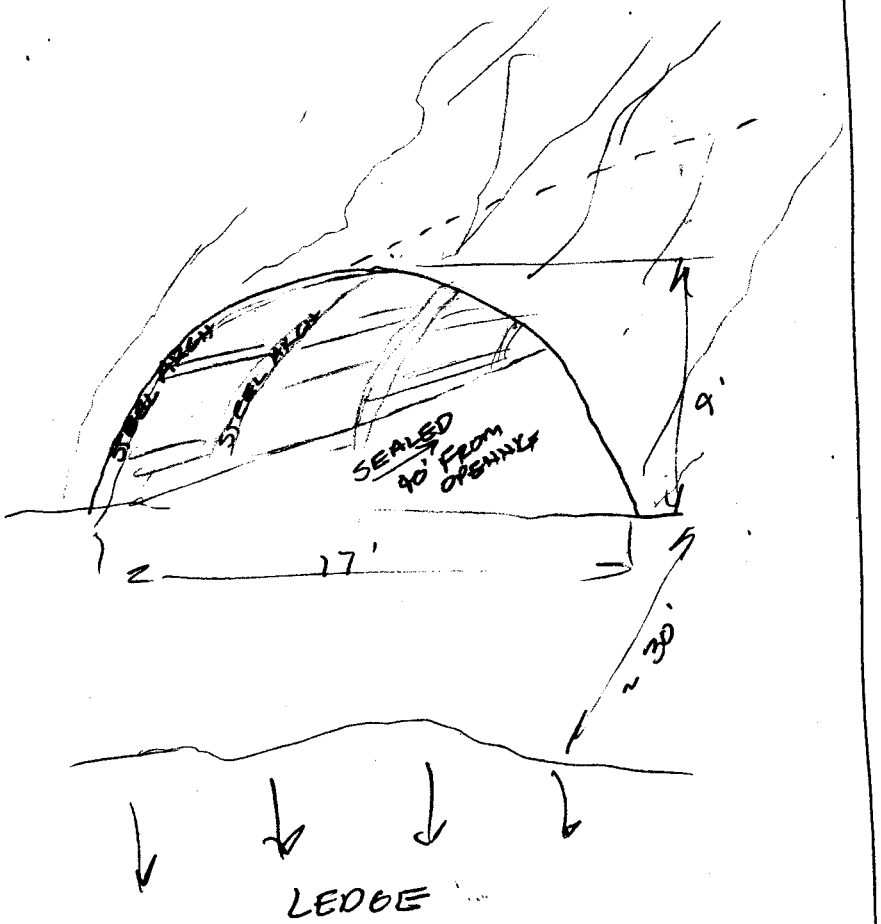

ENTRANCE MEASUREMENTS			40' FEET INSIDE MEASUREMENTS		
Width at top entrance	1	—	Width at top inside	5	—
Width at bottom entrance	2	17	Width at bottom inside	6	17
Height left ~~entrance~~ CTR	3	9	Height left ~~inside~~ CTR	7	9
Height right entrance	4	—	Height right inside	8	—
Cover height above adit	9	5'			
Type of Cover			Depth or Length	10	~30'

TAG NO. _____

DATE _____

PAGE _____ OF _____

PHOTOGRAPH NUMBERS:

ROLL _____

PICTURE(S) _____

INVENTORIED BY

STATE OF UTAH
DEPARTMENT OF NATURAL RESOURCES
DIVISION OF OIL, GAS AND MINING

ADIT OR TUNNEL
FIELD DESCRIPTION FORM

FEATURE DESCRIPTION FORM
SHAFT or ADIT

Site ID: AMR / _____ / _____

Tag No: _____

CURRENT CONDITIONS:

Access to Feature *(check all that apply)*:
- ☐ no established trail
- ☒ foot trail
- ☐ ATV/motorcycle
- ☐ 4-WD road
- ☐ 2-WD dirt road
- ☐ paved road
- ☐ rubber-tired backhoe
- ☐ crawler (track) equipment
- ☐ helicopter
- ☐ wilderness restrictions

Condition of Entrance:
- ☐ Completely collapsed, no access to workings
- ☐ Partially collapsed or backfilled at portal, mine visible but not accessible
- ☐ Partially collapsed or backfilled at portal, mine workings accessible
- ☒ Portal open for access with little or no backfill or collapse (TO SEAL)
- ☐ Obstruction at opening makes evaluation of condition impossible
- ☐ Existing wall/fence/grate *(circle one)*
  - ☐ intact, acceptable
  - ☐ intact, unacceptable
  - ☐ damaged, mine accessible
- ☐ Shaft collar competent (rock or cribbing)
- ☐ Shaft collar sloughing
- ☐ Signs of interior visitation (litter/graffiti) present
- ☐ Other _____

Stability of Opening/Host Rock:
- ☐ unconsolidated soil (unstable)
- ☐ friable (unstable)
- ☐ highly jointed, fractured (unstable)
- ☐ somewhat jointed (fairly stable)
- ☒ massive (stable, competent)
  STEEL ARCH

Depth to Competent Rock: _____ feet

Water *(check all that apply)*:
- ☒ no water present
- ☐ dry, but appears to have occasional water
- ☐ seep/saturated soil (no flow)
- ☐ standing water in opening
- ☐ discharge flowing from opening
- ☐ discharge infiltrates w/in 50 ft of opening
- ☐ discharge flows into intermittent stream
- ☐ discharge flows into perennial stream
- ☐ water flows through/over waste rock
- ☐ water or ground surface discolored
- ☐ wetland vegetation present

Wildlife Observations In/Near Opening:
- ☐ bats: roosting/flying *(circle)*
- ☐ birds: nesting/roosting/flying *(circle)*
- ☐ guano/droppings/owl pellets
- ☐ mammal tracks
- ☐ herps
- ☒ none observed

Apparent depth of workings: _____ feet
- ☒ terminus visible (SEAL)
- ☐ workings extend beyond visibility limits
- ☐ crosscuts, other workings visible

Roof or collar support present:
- ☐ none visible
- ☐ wood props/caps (occasional)
- ☐ stulls or square sets
- ☐ box cribbing (continuous wood lining)
- ☐ log/timber cribbed shaft collar
- ☐ loose rock walls or cribbing
- ☐ concrete shaft collar or adit bulkhead
- ☐ support is failing

MITIGATION/DESIGN CONSIDERATIONS:

Potential Mitigation Actions *(check all that apply)*:
- ☐ Masonry Bulkhead
- ☐ Backfill
- ☐ Bulkhead & Backfill
- ☐ Standard Adit Grate
- ☐ Bat Grate
- ☐ Cable Net
- ☐ Locking Adit Door
- ☐ Shaft Grate
- ☐ PUF Shaft Plug
- ☐ Blast
- ☐ Probe for mine opening (caved adit)
- ☐ Drainage Provisions Required
- ☐ Local Site Clean-up and Regrading
- ☐ Structure Demolition
- ☐ Surface Water Drainage Control
- ☐ Cultural Features Needing Protection Present
- ☐ No Action Required
- ☐ Other _____

Onsite Construction Material Availability:
- ☐ Stone suitable for bulkhead (w/in 100 ft)
- ☐ Backfill
- ☐ Materials not present

Backfill Material Source:
- ☐ mine dump
- ☐ dig or scale down from brow/adjacent slope
- ☐ blast from rock brow or adjacent rock face
- ☐ other _____

Mine Dump Size:
- ☐ small (<20 cubic yards)
- ☐ medium (20 - 100 cubic yards)
- ☐ large (>100 cubic yards)
- ☐ USFS Criteria A3 (>500 cubic yards)

AMR / _____ / _____

AMR PROGRAM INVENTORY FORM

Site Name P38 or P39

ADIT OPENING

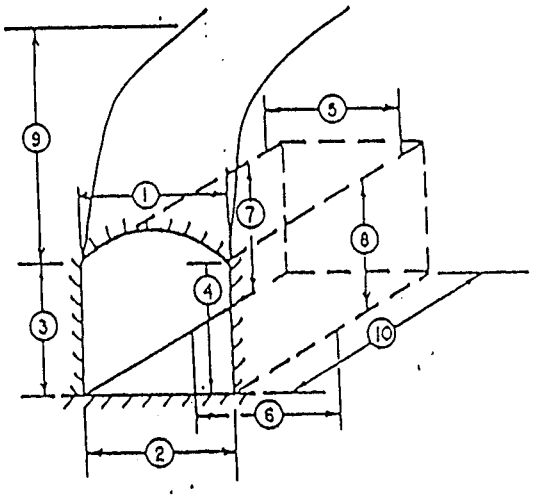

ENTRANCE MEASUREMENTS			_____ FEET INSIDE MEASUREMENTS		
Width at top entrance	1		Width at top inside	5	
Width at bottom entrance	2		Width at bottom inside	6	
Height left entrance	3	7'	Height left inside	7	
Height right entrance	4		Height right inside	8	
Cover height above adit	9				
Type of Cover			Depth or Length	10	

SITE SKETCH

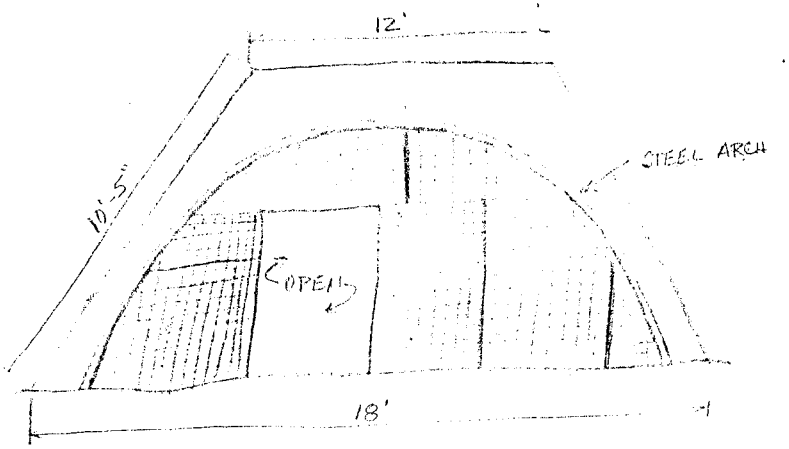

TAG NO. _____

DATE _____

PAGE _____ OF _____

PHOTOGRAPH NUMBERS:

ROLL D

PICTURE(S) 8-1, 2, 3, 4

INVENTORIED BY

STATE OF UTAH
DEPARTMENT OF NATURAL RESOURCES
DIVISION OF OIL, GAS AND MINING

ADIT OR TUNNEL
FIELD DESCRIPTION FORM

FEATURE DESCRIPTION FORM
SHAFT or ADIT

Site ID: AMR / _____ / _____

Tag No: _____

CURRENT CONDITIONS:

Access to Feature *(check all that apply)*:
- ☐ no established trail
- ☐ foot trail
- ☐ ATV/motorcycle
- ■ 4-WD road
- ☐ 2-WD dirt road
- ☐ paved road
- ☐ rubber-tired backhoe
- ☐ crawler (track) equipment
- ☐ helicopter
- ☐ wilderness restrictions

Condition of Entrance:
- ☐ Completely collapsed, no access to workings
- ☐ Partially collapsed or backfilled at portal, mine visible but not accessible
- ☐ Partially collapsed or backfilled at portal, mine workings accessible
- ☐ Portal open for access with little or no backfill or collapse
- ☐ Obstruction at opening makes evaluation of condition impossible
- ☐ Existing wall/fence/grate *(circle one)*
  - ☐ intact, acceptable
  - ☐ intact, unacceptable
  - ☐ damaged, mine accessible
- ☐ Shaft collar competent (rock or cribbing)
- ☐ Shaft collar sloughing
- ☐ Signs of interior visitation (litter/graffiti) present
- ■ Other SEALED

Stability of Opening/Host Rock:
- ☐ unconsolidated soil (unstable)
- ☐ friable (unstable)
- ☐ highly jointed, fractured (unstable)
- ☐ somewhat jointed (fairly stable)
- ☐ massive (stable, competent)

Depth to Competent Rock: _____ feet

Water *(check all that apply)*:
- ■ no water present
- ☐ dry, but appears to have occasional water
- ☐ seep/saturated soil (no flow)
- ☐ standing water in opening
- ☐ discharge flowing from opening
- ☐ discharge infiltrates w/in 50 ft of opening
- ☐ discharge flows into intermittent stream
- ☐ discharge flows into perennial stream
- ☐ water flows through/over waste rock
- ☐ water or ground surface discolored
- ☐ wetland vegetation present

Wildlife Observations In/Near Opening:
- ☐ bats: roosting/flying *(circle)*
- ☐ birds: nesting/roosting/flying *(circle)*
- ☐ guano/droppings/owl pellets
- ☐ mammal tracks
- ☐ herps
- ■ none observed

Apparent depth of workings: _____ feet
- ■ terminus visible
- ☐ workings extend beyond visibility limits
- ☐ crosscuts, other workings visible

Roof or collar support present:
- ☐ none visible
- ☐ wood props/caps (occasional)
- ☐ stulls or square sets
- ☐ box cribbing (continuous wood lining)
- ☐ log/timber cribbed shaft collar
- ☐ loose rock walls or cribbing
- ☐ concrete shaft collar or adit bulkhead
- ☐ support is failing

MITIGATION/DESIGN CONSIDERATIONS:

Potential Mitigation Actions *(check all that apply)*:
- ☐ Masonry Bulkhead
- ☐ Backfill
- ☐ Bulkhead & Backfill
- ☐ Standard Adit Grate
- ☐ Bat Grate
- ☐ Cable Net
- ☐ Locking Adit Door
- ☐ Shaft Grate
- ☐ PUF Shaft Plug
- ☐ Blast
- ☐ Probe for mine opening (caved adit)
- ☐ Drainage Provisions Required
- ☐ Local Site Clean-up and Regrading
- ☐ Structure Demolition
- ☐ Surface Water Drainage Control
- ☐ Cultural Features Needing Protection Present
- ☐ No Action Required
- ☐ Other _____

Onsite Construction Material Availability:
- ☐ Stone suitable for bulkhead (w/in 100 ft)
- ☐ Backfill
- ☐ Materials not present

Backfill Material Source:
- ☐ mine dump
- ☐ dig or scale down from brow/adjacent slope
- ☐ blast from rock brow or adjacent rock face
- ☐ other _____

Mine Dump Size:
- ☐ small (<20 cubic yards)
- ☐ medium (20 - 100 cubic yards)
- ☐ large (>100 cubic yards)
- ☐ USFS Criteria A3 (>500 cubic yards)

AMR / _____ / _____

AMR PROGRAM INVENTORY FORM

Site Name S1

SHAFT OPENING

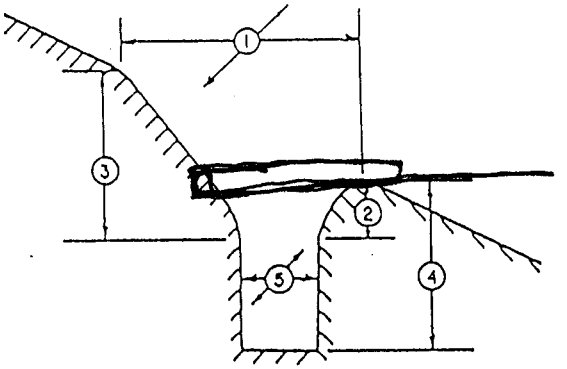

Length at top ① _____

Width at top ① _____

Depth of funnel (if present) Downhill Side ② _____

Depth of funnel (if present) Uphill Side ③ _____

Total depth ④ _____

Length ____ ft. inside ⑤ _____

Width ____ ft. inside ⑤ _____

SITE SKETCH

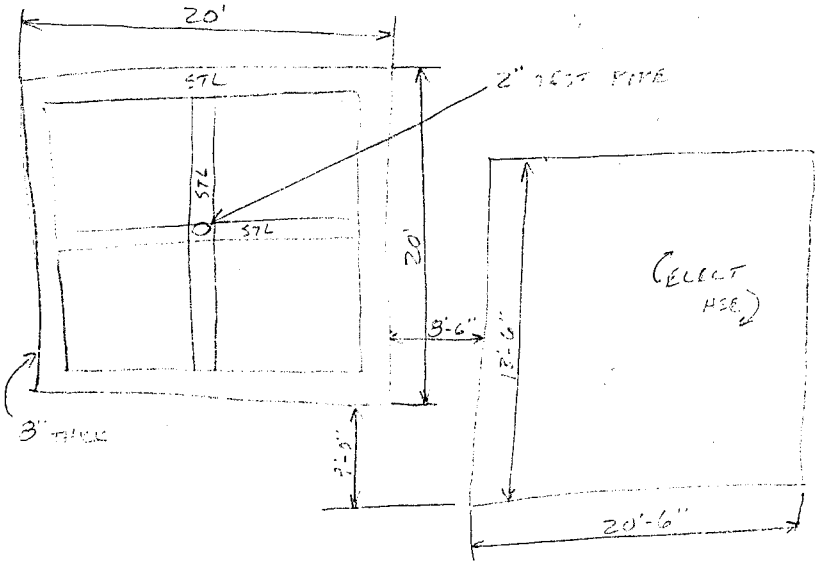

TAG NO. _____

DATE _____

PAGE _____ OF _____

PHOTOGRAPH NUMBERS:

ROLL B

PICTURE(S) 10 & 11

INVENTORIED BY

STATE OF UTAH
DEPARTMENT OF NATURAL RESOURCES
DIVISION OF OIL, GAS AND MINING

SHAFT
FIELD DESCRIPTION FORM

FEATURE DESCRIPTION FORM
SHAFT or ADIT

Site ID: AMR / _____ / _____

Tag No: _____

CURRENT CONDITIONS:

Access to Feature *(check all that apply)*:
- ☐ no established trail
- ☐ foot trail
- ☐ ATV/motorcycle
- ☐ 4-WD road
- ☒ 2-WD dirt road
- ☐ paved road
- ☐ rubber-tired backhoe
- ☐ crawler (track) equipment
- ☐ helicopter
- ☐ wilderness restrictions

Condition of Entrance:
- ☐ Completely collapsed, no access to workings
- ☐ Partially collapsed or backfilled at portal, mine visible but not accessible
- ☐ Partially collapsed or backfilled at portal, mine workings accessible
- ☐ Portal open for access with little or no backfill or collapse
- ☐ Obstruction at opening makes evaluation of condition impossible
- ☐ Existing wall/fence/grate *(circle one)*
  - ☐ intact, acceptable
  - ☐ intact, unacceptable
  - ☐ damaged, mine accessible
- ☐ Shaft collar competent (rock or cribbing)
- ☐ Shaft collar sloughing
- ☐ Signs of interior visitation (litter/graffiti) present
- ☒ Other CAPPED

Stability of Opening/Host Rock:
- ☐ unconsolidated soil (unstable)
- ☐ friable (unstable)
- ☐ highly jointed, fractured (unstable)
- ☐ somewhat jointed (fairly stable)
- ☐ massive (stable, competent)

Depth to Competent Rock: _____ feet

Water *(check all that apply)*:
- ☐ no water present
- ☐ dry, but appears to have occasional water
- ☐ seep/saturated soil (no flow)
- ☐ standing water in opening
- ☐ discharge flowing from opening
- ☐ discharge infiltrates w/in 50 ft of opening
- ☐ discharge flows into intermittent stream
- ☐ discharge flows into perennial stream
- ☐ water flows through/over waste rock
- ☐ water or ground surface discolored
- ☐ wetland vegetation present

Wildlife Observations In/Near Opening:
- ☐ bats: roosting/flying *(circle)*
- ☐ birds: nesting/roosting/flying *(circle)*
- ☐ guano/droppings/owl pellets
- ☐ mammal tracks
- ☐ herps
- ☐ none observed

Apparent depth of workings: _____ feet
- ☐ terminus visible
- ☐ workings extend beyond visibility limits
- ☐ crosscuts, other workings visible

Roof or collar support present:
- ☐ none visible
- ☐ wood props/caps (occasional)
- ☐ stulls or square sets
- ☐ box cribbing (continuous wood lining)
- ☐ log/timber cribbed shaft collar
- ☐ loose rock walls or cribbing
- ☐ concrete shaft collar or adit bulkhead
- ☐ support is failing

MITIGATION/DESIGN CONSIDERATIONS:

Potential Mitigation Actions *(check all that apply)*:
- ☐ Masonry Bulkhead
- ☐ Backfill
- ☐ Bulkhead & Backfill
- ☐ Standard Adit Grate
- ☐ Bat Grate
- ☐ Cable Net
- ☐ Locking Adit Door
- ☐ Shaft Grate
- ☐ PUF Shaft Plug
- ☐ Blast
- ☐ Probe for mine opening (caved adit)
- ☐ Drainage Provisions Required
- ☐ Local Site Clean-up and Regrading
- ☐ Structure Demolition
- ☐ Surface Water Drainage Control
- ☐ Cultural Features Needing Protection Present
- ☐ No Action Required
- ☐ Other _____

Onsite Construction Material Availability:
- ☐ Stone suitable for bulkhead (w/in 100 ft)
- ☐ Backfill
- ☐ Materials not present

Backfill Material Source:
- ☐ mine dump
- ☐ dig or scale down from brow/adjacent slope
- ☐ blast from rock brow or adjacent rock face
- ☐ other _____

Mine Dump Size:
- ☐ small (<20 cubic yards)
- ☐ medium (20 - 100 cubic yards)
- ☐ large (>100 cubic yards)
- ☐ USFS Criteria A3 (>500 cubic yards)

AMR / _____ / _____

AMR PROGRAM INVENTORY FORM

Site Name S2 2CYN SHAFT

SHAFT OPENING

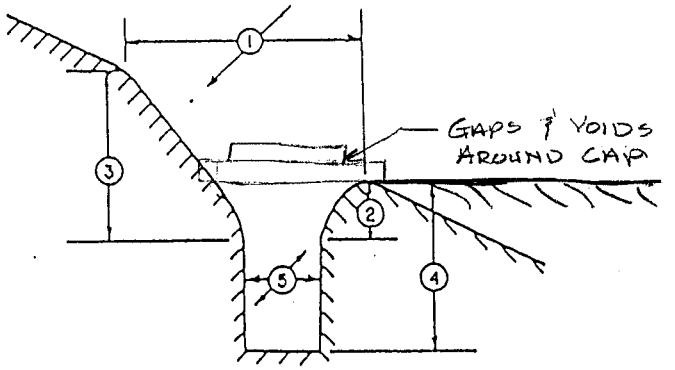

Length of top (1) _____

Width of top (1) _____

Depth of funnel (if present) Downhill Side (2) _____

Depth of funnel (if present) Uphill Side (3) _____

Total depth (4) _____

Length ____ ft. inside (5) _____

Width ____ ft. inside (5) _____

SITE SKETCH

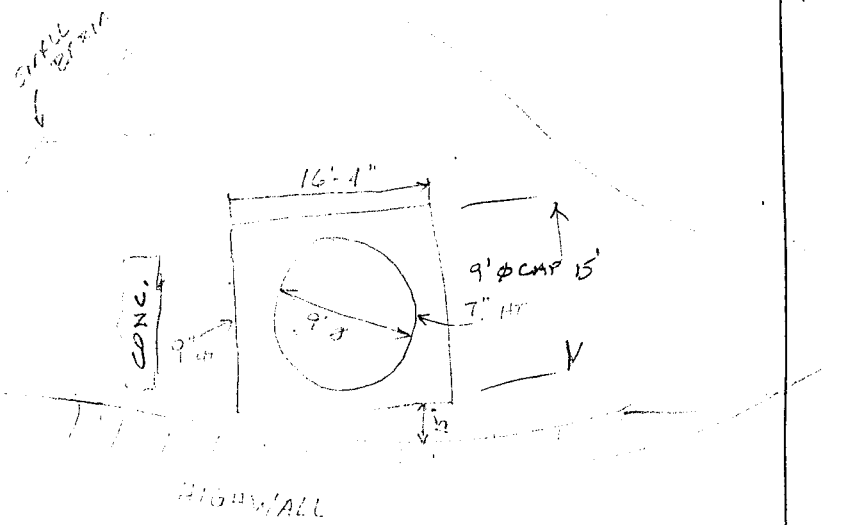

TAG NO. _____

DATE ____ _____

PAGE _____ OF _____

PHOTOGRAPH NUMBERS:

ROLL ____ B

PICTURE(S) 1, 2, 3 & 4

INVENTORIED BY

STATE OF UTAH
DEPARTMENT OF NATURAL RESOURCES
DIVISION OF OIL, GAS AND MINING

SHAFT
FIELD DESCRIPTION FORM

FEATURE DESCRIPTION FORM
SHAFT or ADIT

Site ID: AMR / _____ / _____

Tag No: _____

CURRENT CONDITIONS:

Access to Feature *(check all that apply)*:
- ☐ no established trail
- ☐ foot trail
- ☐ ATV/motorcycle
- ☐ 4-WD road
- ☐ 2-WD dirt road
- ☐ paved road
- ☐ rubber-tired backhoe
- ☐ crawler (track) equipment
- ☐ helicopter
- ☐ wilderness restrictions

Condition of Entrance:
- ☐ Completely collapsed, no access to workings
- ☐ Partially collapsed or backfilled at portal, mine visible but not accessible
- ☐ Partially collapsed or backfilled at portal, mine workings accessible
- ☐ Portal open for access with little or no backfill or collapse
- ☐ Obstruction at opening makes evaluation of condition impossible
- ☐ Existing wall/fence/grate *(circle one)*
  - ☐ intact, acceptable
  - ☐ intact, unacceptable
  - ☐ damaged, mine accessible
- ☐ Shaft collar competent (rock or cribbing)
- ☐ Shaft collar sloughing
- ☐ Signs of interior visitation (litter/graffiti) present
- ☐ Other _____

Stability of Opening/Host Rock:
- ☐ unconsolidated soil (unstable)
- ☐ friable (unstable)
- ☐ highly jointed, fractured (unstable)
- ☐ somewhat jointed (fairly stable)
- ☐ massive (stable, competent)

Depth to Competent Rock: _____ feet

Water *(check all that apply)*:
- ☐ no water present
- ☐ dry, but appears to have occasional water
- ☐ seep/saturated soil (no flow)
- ☐ standing water in opening
- ☐ discharge flowing from opening
- ☐ discharge infiltrates w/in 50 ft of opening
- ☐ discharge flows into intermittent stream
- ☐ discharge flows into perennial stream
- ☐ water flows through/over waste rock
- ☐ water or ground surface discolored
- ☐ wetland vegetation present

Wildlife Observations In/Near Opening:
- ☐ bats: roosting/flying *(circle)*
- ☐ birds: nesting/roosting/flying *(circle)*
- ☐ guano/droppings/owl pellets
- ☐ mammal tracks
- ☐ herps
- ☐ none observed

Apparent depth of workings: _____ feet
- ☐ terminus visible
- ☐ workings extend beyond visibility limits
- ☐ crosscuts, other workings visible

Roof or collar support present:
- ☐ none visible
- ☐ wood props/caps (occasional)
- ☐ stulls or square sets
- ☐ box cribbing (continuous wood lining)
- ☐ log/timber cribbed shaft collar
- ☐ loose rock walls or cribbing
- ☐ concrete shaft collar or adit bulkhead
- ☐ support is failing

MITIGATION/DESIGN CONSIDERATIONS:

Potential Mitigation Actions *(check all that apply)*:
- ☐ Masonry Bulkhead
- ☐ Backfill
- ☐ Bulkhead & Backfill
- ☐ Standard Adit Grate
- ☐ Bat Grate
- ☐ Cable Net
- ☐ Locking Adit Door
- ☐ Shaft Grate
- ☐ PUF Shaft Plug
- ☐ Blast
- ☐ Probe for mine opening (caved adit)
- ☐ Drainage Provisions Required
- ☐ Local Site Clean-up and Regrading
- ☐ Structure Demolition
- ☐ Surface Water Drainage Control
- ☐ Cultural Features Needing Protection Present
- ☐ No Action Required
- ☐ Other _____

Onsite Construction Material Availability:
- ☐ Stone suitable for bulkhead (w/in 100 ft)
- ☐ Backfill
- ☐ Materials not present

Backfill Material Source:
- ☐ mine dump
- ☐ dig or scale down from brow/adjacent slope
- ☐ blast from rock brow or adjacent rock face
- ☐ other _____

Mine Dump Size:
- ☐ small (<20 cubic yards)
- ☐ medium (20 - 100 cubic yards)
- ☐ large (>100 cubic yards)
- ☐ USFS Criteria A3 (>500 cubic yards)

AMR / ____ / ____

AMR PROGRAM INVENTORY FORM

Site Name S5

SHAFT OPENING

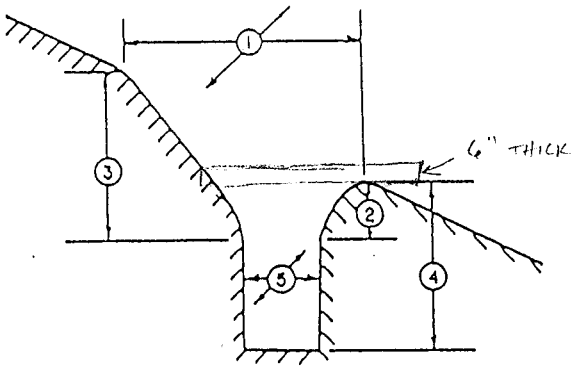

Length at top ① ____

Width at top ① ____

Depth of funnel (if present) Downhill Side ② ____

Depth of funnel (if present) Uphill Side ③ ____

Total depth ④ ____

Length ____ ft. inside ⑤ ____

Width ____ ft. inside ⑤ ____

SITE SKETCH

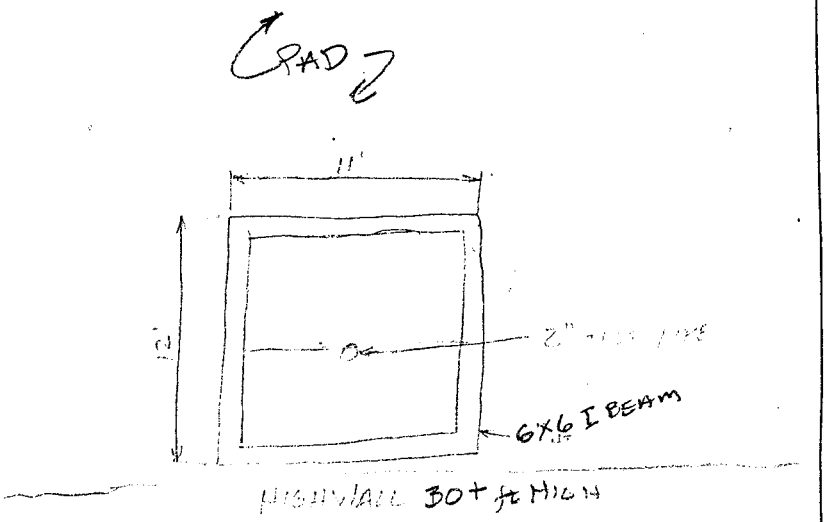

TAG NO. ____

DATE ____

PAGE ____ OF ____

PHOTOGRAPH NUMBERS:

ROLL ____ D

PICTURE(S) 16 & 17

INVENTORIED BY

STATE OF UTAH
DEPARTMENT OF NATURAL RESOURCES
DIVISION OF OIL, GAS AND MINING

SHAFT
FIELD DESCRIPTION FORM

FEATURE DESCRIPTION FORM
SHAFT or ADIT

Site ID: AMR / _____ / _____

Tag No: _____

CURRENT CONDITIONS:

Access to Feature *(check all that apply)*:
- ☐ no established trail
- ☐ foot trail
- ☐ ATV/motorcycle
- ☐ 4-WD road
- ☐ 2-WD dirt road
- ☐ paved road
- ☐ rubber-tired backhoe
- ☐ crawler (track) equipment
- ☐ helicopter
- ☐ wilderness restrictions

Condition of Entrance:
- ☐ Completely collapsed, no access to workings
- ☐ Partially collapsed or backfilled at portal, mine visible but not accessible
- ☐ Partially collapsed or backfilled at portal, mine workings accessible
- ☐ Portal open for access with little or no backfill or collapse
- ☐ Obstruction at opening makes evaluation of condition impossible
- ☐ Existing wall/fence/grate *(circle one)*
  - ☐ intact, acceptable
  - ☐ intact, unacceptable
  - ☐ damaged, mine accessible
- ☐ Shaft collar competent (rock or cribbing)
- ☐ Shaft collar sloughing
- ☐ Signs of interior visitation (litter/graffiti) present
- ☐ Other _____

Stability of Opening/Host Rock:
- ☐ unconsolidated soil (unstable)
- ☐ friable (unstable)
- ☐ highly jointed, fractured (unstable)
- ☐ somewhat jointed (fairly stable)
- ☐ massive (stable, competent)

Depth to Competent Rock: _____ feet

Water *(check all that apply)*:
- ☐ no water present
- ☐ dry, but appears to have occasional water
- ☐ seep/saturated soil (no flow)
- ☐ standing water in opening
- ☐ discharge flowing from opening
- ☐ discharge infiltrates w/in 50 ft of opening
- ☐ discharge flows into intermittent stream
- ☐ discharge flows into perennial stream
- ☐ water flows through/over waste rock
- ☐ water or ground surface discolored
- ☐ wetland vegetation present

Wildlife Observations In/Near Opening:
- ☐ bats: roosting/flying *(circle)*
- ☐ birds: nesting/roosting/flying *(circle)*
- ☐ guano/droppings/owl pellets
- ☐ mammal tracks
- ☐ herps
- ☐ none observed

Apparent depth of workings: _____ feet
- ☐ terminus visible
- ☐ workings extend beyond visibility limits
- ☐ crosscuts, other workings visible

Roof or collar support present:
- ☐ none visible
- ☐ wood props/caps (occasional)
- ☐ stulls or square sets
- ☐ box cribbing (continuous wood lining)
- ☐ log/timber cribbed shaft collar
- ☐ loose rock walls or cribbing
- ☐ concrete shaft collar or adit bulkhead
- ☐ support is failing

MITIGATION/DESIGN CONSIDERATIONS:

Potential Mitigation Actions *(check all that apply)*:
- ☐ Masonry Bulkhead
- ☐ Backfill
- ☐ Bulkhead & Backfill
- ☐ Standard Adit Grate
- ☐ Bat Grate
- ☐ Cable Net
- ☐ Locking Adit Door
- ☐ Shaft Grate
- ☐ PUF Shaft Plug
- ☐ Blast
- ☐ Probe for mine opening (caved adit)
- ☐ Drainage Provisions Required
- ☐ Local Site Clean-up and Regrading
- ☐ Structure Demolition
- ☐ Surface Water Drainage Control
- ☐ Cultural Features Needing Protection Present
- ☐ No Action Required
- ☐ Other _____

Onsite Construction Material Availability:
- ☐ Stone suitable for bulkhead (w/in 100 ft)
- ☐ Backfill
- ☐ Materials not present

Backfill Material Source:
- ☐ mine dump
- ☐ dig or scale down from brow/adjacent slope
- ☐ blast from rock brow or adjacent rock face
- ☐ other _____

Mine Dump Size:
- ☐ small (<20 cubic yards)
- ☐ medium (20 - 100 cubic yards)
- ☐ large (>100 cubic yards)
- ☐ USFS Criteria A3 (>500 cubic yards)

AMR / _____ / _____

AMR PROGRAM INVENTORY FORM

Site Name 57 & 58

SHAFT OPENING

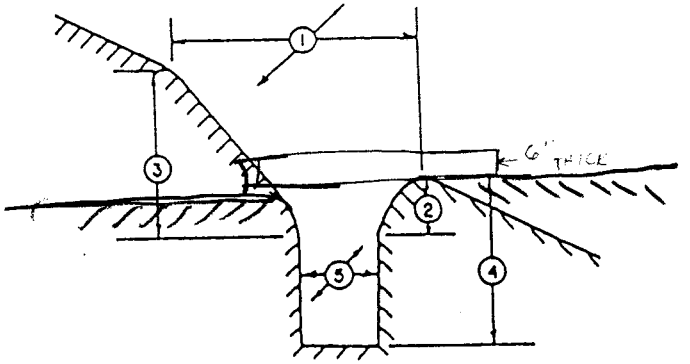

Length of top ① _____

Width of top ① _____

Depth of funnel (if present) Downhill Side ② _____

Depth of funnel (if present) Uphill Side ③ _____

Total depth ④ _____

Length ____ ft. inside ⑤ _____

Width ____ ft. inside ⑤ _____

SITE SKETCH

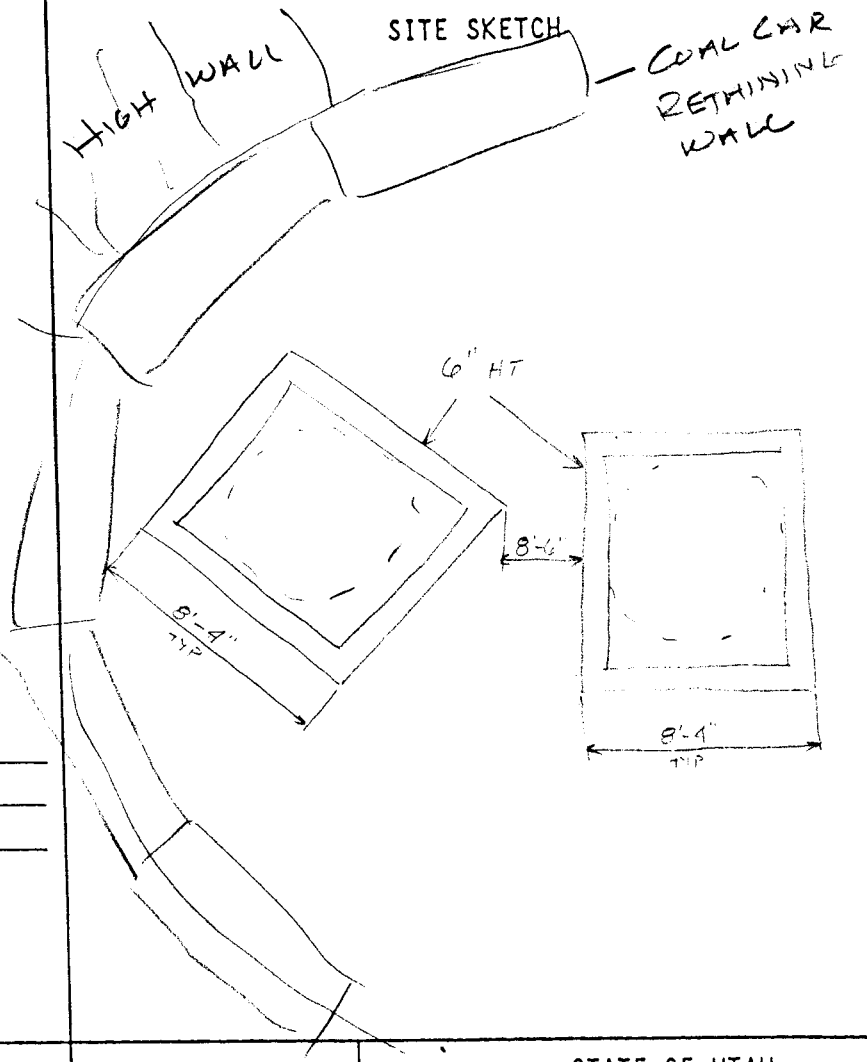

TAG NO. _____

DATE _____

PAGE _____ OF _____

PHOTOGRAPH NUMBERS:

ROLL B

PICTURE(S) 19 20 & 21

INVENTORIED BY

STATE OF UTAH
DEPARTMENT OF NATURAL RESOURCES
DIVISION OF OIL, GAS AND MINING

SHAFT
FIELD DESCRIPTION FORM

Contact People for Sunnyside Coal Portal Evaluation

Joe Fielder
General Manager
Kaiser/Sunnyside Coal Company
885 Valley View
Castle Dale, Utah 84513
(435) 381-2759

Darrell Leonard
Superintendent
Kaiser
Sunnyside, Utah 84539
(435) 888-4416

James O. Peterson
Safety Director
Kaiser
735 East 800 North
Price, UT 84501
(435) 637-2216

Bryon Allred
Chief Surveyor
Kaiser
307 East 200 North
Price, Utah 84501
(435) 637-1915

John S. Huefner, P.E.
Chief Engineer
Kaiser
905 North 600 East
Price, Utah 84501
(435) 637-0288

Gary Gray
Chief Engineer
Kaiser/Sunnyside Coal Company
1477 West 2060 North
Helper, Utah 84526
(435) 637-3119

Don McCourt
Employee
Kaiser/Sunnyside Coal Company
220 400 North
Columbia, Utah 84539
(435) 888-2075

Ivan McCourt
Employee
Kaiser/Columbia
21 Main
Columbia, Utah 84539
(435) 888-4488

Allen P.Childs
General Manager
Castle Valley Services
140 North Cedar Hills Drive
Price, Utah 84501
(435) 637-3557

Larry W. Johnson
Manager-Technical Services
Castle Valley Services
140 North Cedar Hills Drive
Price, Utah 84501
(435) 637-3557

Castle Valley Services

PO Box 922 • Price, Utah 84501
Phone (801) 637-3557 • Phone (801) 637-9300
Fax (801) 637-3593 • Fax (801) 637-2833

September 30, 1997

Steve Newton
Montgomery Watson
4525 South Wasatch Blvd Suite #200
Salt Lake City, UT 84124

Dear Steve,

Enclosed is a list of people we contacted for the Sunnyside Coal Portal Evaluation and a map showing the portals and shafts in their general areas. Please include these items in the binder in order to complete the Evaluation Report of Portals and Shafts.

Thank you for providing us with this opportunity to allow Castle Valley Services to work with Montgomery Watson. If you have any problems, concerns, or questions please give me a call at (801) 637-3557.

Sincerely,

Larry W. Johnson

Larry W. Johnson
Manager-Technical Services
Castle Valley Services

3595 So. Highland Dr.
Unit 4
Las Vegas, NV 89102
(702) 876-5955
FAX (702) 876-9509

P.O. Box 5307
951 Alpine Drive
Elko, NV 89801
(702) 778-0477
FAX (702) 778-0520

5475 Peoria St.
Bldg 2, Units I & J
Denver, CO 80239
(303) 373-5070
FAX (303) 373-5099

P.O. Box 1178
719 2nd Street
Paonia, CO 81428
(970) 527-3151
FAX (970) 527-6846

P.O. Box 539
110 North Main
Lyman, WY 82937
(307) 787-3304
FAX (307) 787-3245