RECEIVED
DEC 11 1981
DIVISION OF
OIL, GAS & MINING

EUREKA ENERGY COMPANY

A SUBSIDIARY OF PACIFIC GAS AND ELECTRIC

PLANS OF PROPOSED HAUL ROAD
DUGOUT CREEK ROAD

LENGTH = 8.683 MILES
GRADING, DRAINAGE & SURFACING

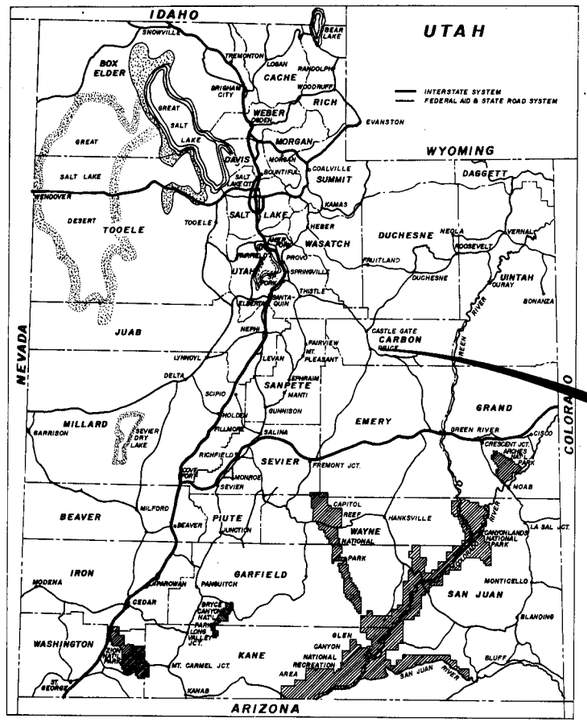

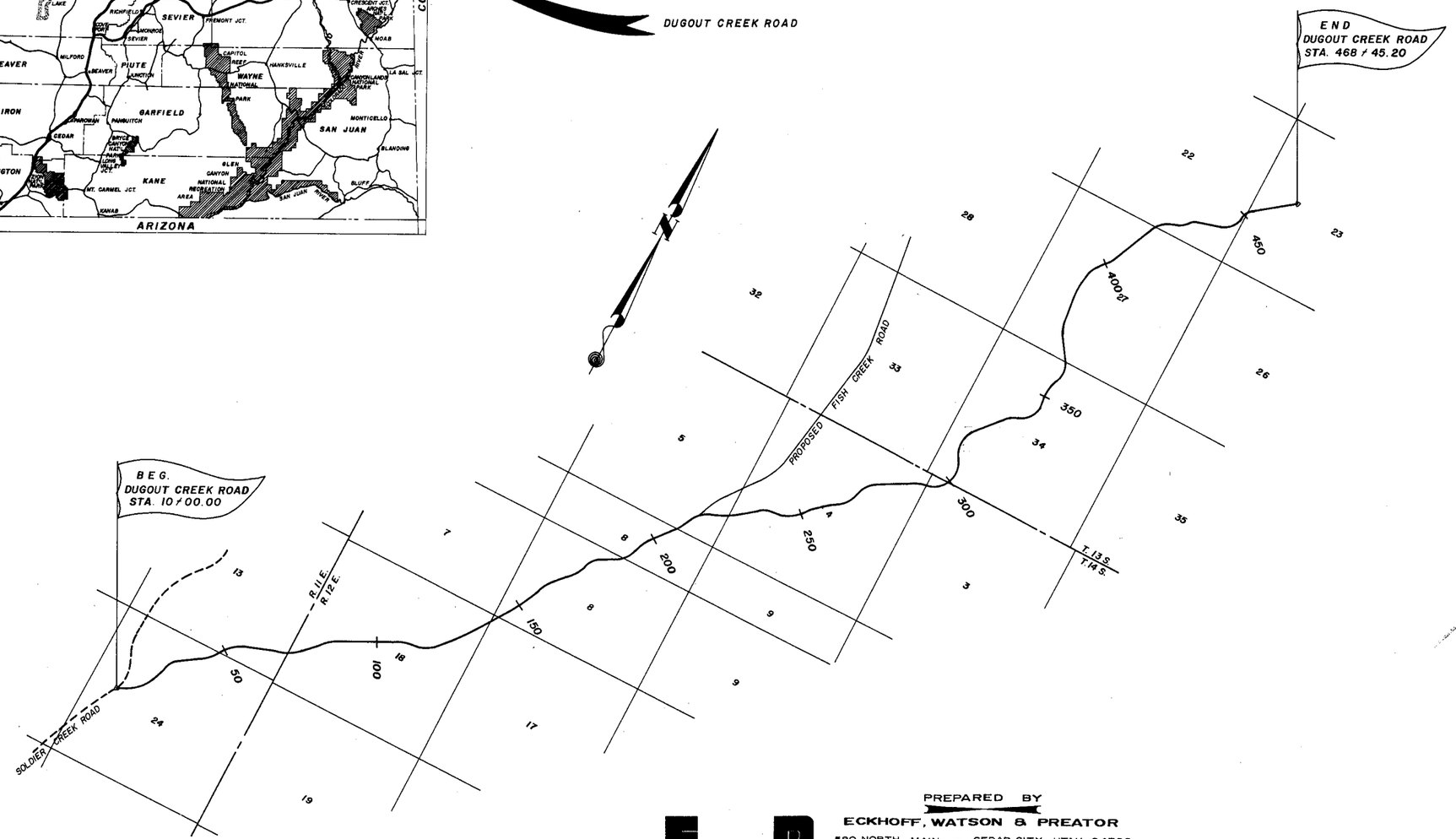

ROADWAY DRAWINGS	
SHEET NO.	DESCRIPTION
1	TITLE SHEET
2 - 2A	TYPICAL SHEETS
3 - 3E	SUMMARY SHEETS
4 - 19	PLAN & PROFILE SHEETS

STRUCTURE DRAWINGS		
DWG. NO.	NO. SHTS.	DESCRIPTION
H1	2	HEADWALL FOR 132" STRUCTURAL PLATE PIPE
H2	3	HEADWALL FOR 144" STRUCTURAL PLATE PIPE
H3	2	HEADWALL FOR 16'-7" x 10'-1" STR. PLATE PIPE ARCH

STANDARD DRAWINGS		
DWG. NO.	DATE	DESCRIPTION
605-1	2-5-80	FILL HEIGHTS FOR PIPE CULVERTS
605-2	9-6-77	METAL CULVERT END SECTIONS
605-20	1-25-79	REINFORCED CONCRETE CULVERTS
725-1	9-9-80	R W MARKER & MAIL BOX POSTS
726-2	10-14-80	DELINEATION OTHER THAN INTERSTATE
735-1	6-26-81	BEAM GUARDRAIL
735-2	12-5-72	GUARDRAIL APPROACH ELEMENT INSTALLATION
735-2A	1-23-80	TURN DOWN BRACKET FOR STEEL GUARDRAIL POSTS
745-1B	4-3-79	CONSTRUCTION NOTIFICATION SIGNS
745-1C	7-8-80	CONSTRUCTION SIGNING BARRICADES
745-41	3-11-80	TYPICAL PAVEMENT MARKINGS
745-60	6-30-81	HIGHWAY SIGNS OTHER THAN FREEWAYS
805-1	10-14-80	SUPERELEVATION AND WIDENING
1010	9-25-81	T.E.C. CONTOUR DITCHING AND TEMPORARY BERMS
1011	9-25-81	T.E.C. TEMPORARY SLOPE DRAINS
1012	9-25-81	T.E.C. SEDIMENT STRUCTURES
1013	9-25-81	T.E.C. SEDIMENT STRUCTURES
1014	9-25-81	T.E.C. CHECK DAMS

PREPARED BY
ECKHOFF, WATSON & PREATOR
580 NORTH MAIN — CEDAR CITY, UTAH 84720
801-586-3004
1798 SO. WEST TEMPLE - SALT LAKE CITY, UTAH 84115
801-486-5621
ENGINEERS - PLANNERS - SURVEYORS

ENGINEER'S CERTIFICATE

I, RALPH E. WATSON, REGISTERED ENGINEER NO. 3367 DO HEREBY CERTIFY THAT THESE PLANS HAVE BEEN PREPARED BY ME AND UNDER MY DIRECT SUPERVISION AND THEY ARE ACCURATE TO THE BEST OF MY KNOWLEDGE.

Ralph E. Watson — RALPH E. WATSON, P.E.
Oct. 20, 1981 — DATE

REGISTERED PROFESSIONAL ENGINEER
Ralph E. Watson
3367
State of Utah

ACCEPTED Gary L. Davis — Oct 27, 1981

LOG & POLE CHECK DAMS

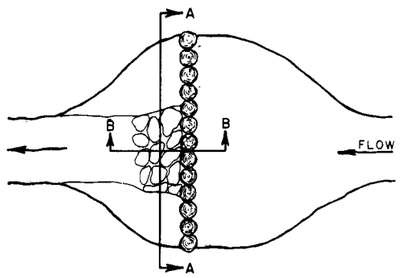

TOP VIEW

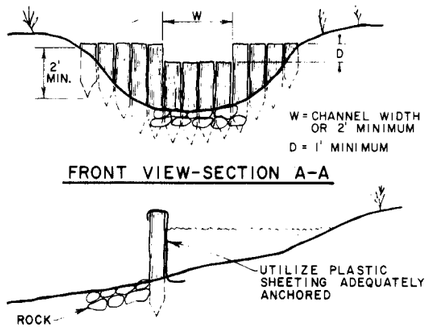

FRONT VIEW-SECTION A-A

SIDE VIEW-SECTION B-B

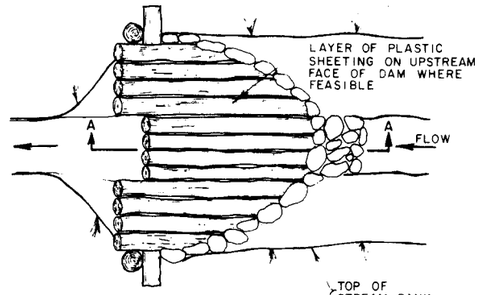

TOP VIEW

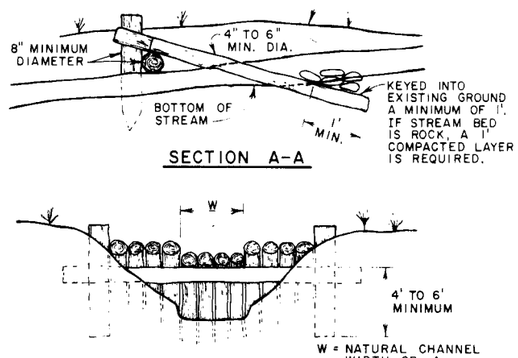

SECTION A-A

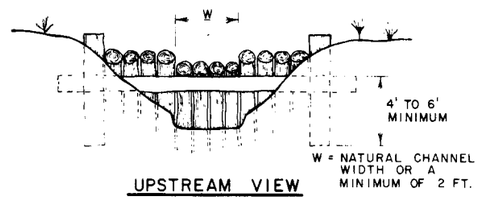

UPSTREAM VIEW

STONE CHECK DAM

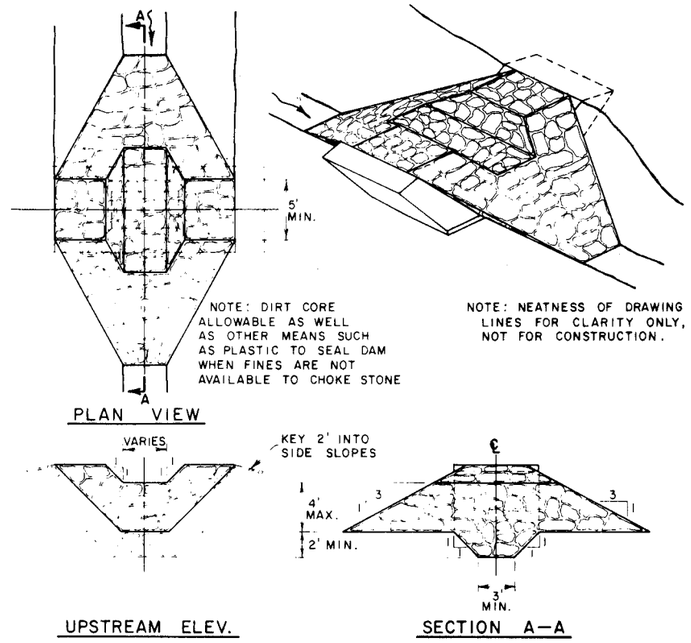

PLAN VIEW

UPSTREAM ELEV.

SECTION A-A

HAY OR STRAW CHECK DAM

TYPE "C"

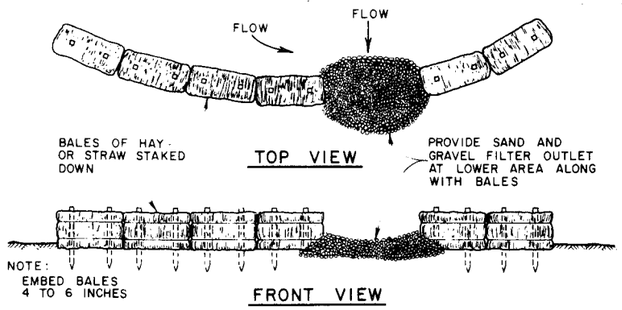

TOP VIEW

FRONT VIEW

HAY OR STRAW CHECK DAMS

TYPE "A"

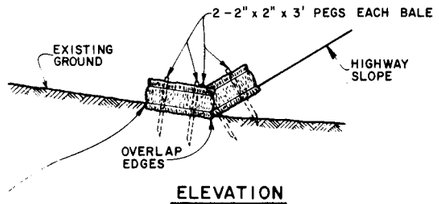

ELEVATION

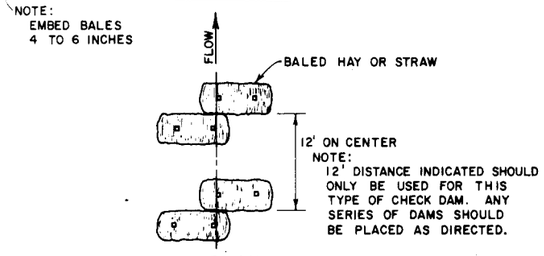

PLAN

TO BE USED WHERE THE EXISTING GROUND SLOPES TOWARDS THE HIGHWAY EMBANKMENT AS CALLED FOR ON PLANS.
BALES SHOWN IN THE ABOVE CONFIGURATION SHALL BE CONSIDERED AS ONE CHECK DAM WHEN MEASURED FOR PAYMENT.

TYPE "B"

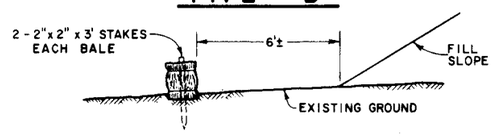

ELEVATION

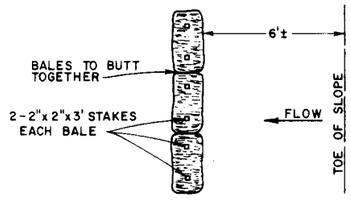

PLAN

TO BE USED WHERE THE EXISTING GROUND SLOPES AWAY FROM THE HIGHWAY EMBANKMENT AS CALLED FOR ON PLANS.

CHECK DAMS:

1- DEFINITION: A BARRIER COMPOSED OF LOGS AND POLES, LARGE STONES, SAND BAGS, OR OTHER MATERIALS PLACED ACROSS A NATURAL OR CONSTRUCTED DRAINWAY.

2- PURPOSE: CHECK DAMS ARE TO BE UTILIZED TO RETARD STREAM FLOW AND CATCH SMALL SEDIMENT LOADS.

3- CONDITIONS WHERE APPLICABLE: CHECK DAMS ARE TO BE USED ONLY TO ASSIST IN SEDIMENT CONTROL AND ARE NOT SUBSTITUTES FOR SEDIMENT DAMS, PONDS, OR TRAPS. WHEN USED UPSTREAM FROM SEDIMENT BASINS, THESE CHECK DAMS WILL IN NO WAY REDUCE THE REQUIRED SEDIMENT CAPACITY OF THE SEDIMENT BASIN.

CHECK DAMS MAY BE USED IN LOCATIONS SUCH AS:

A- IN NATURAL DRAINWAYS CLOSE TO THE DISTURBED AREA TO CATCH INITIAL SEDIMENT LOADS.

B- IN CHANNELS CARRYING WATER OFF THE BENCH TOWARD A NATURAL DRAINWAY.

C- OTHER LOCATIONS WHERE SMALL LOCALIZED SEDIMENTATION PROBLEMS EXIST.

STONE CHECK DAMS SHOULD NOT BE UTILIZED WHERE THE UPSTREAM DRAINAGE AREA EXCEEDS 50 ACRES. LOG AND POLE STRUCTURES SHOULD NOT BE USED IN A DRAINWAY WHERE THE UPSTREAM DRAINAGE AREA EXCEEDS 5 ACRES.

4- DESIGN CRITERIA: A DESIGN IS NOT NEEDED FOR LOG AND POLE STRUCTURES. GENERALLY THEY WILL FOLLOW THE ABOVE DETAILS.

A DESIGN IS NOT REQUIRED FOR STONE CHECK DAMS; HOWEVER, THE FOLLOWING CRITERIA WILL BE USED:

A- TWENTY-FIVE PERCENT OF THE ROCK WILL BE 18" OR LARGER. THE REMAINING 75% SHALL BE WELL GRADED MATERIAL CONSISTING OF SUFFICIENT ROCK SMALL ENOUGH TO FILL THE VOIDS BETWEEN THE LARGER ROCKS

4- DESIGN CRITERIA CONT.:

B- THE DAM WILL BE KEYED INTO THE SIDES AND BOTTOM OF THE CHANNEL A MINIMUM DEPTH OF 2 FEET. MINIMUM WIDTH OF THE KEY WILL BE 3 FEET

C- UPSTREAM SLOPE AND DOWNSTREAM SLOPE WILL BE 3 HORIZONTAL TO 1 VERTICAL.

D- A WIER THE WIDTH OF THE CHANNEL BUT AT LEAST 2 FEET WIDE, AND A MINIMUM OF ONE FOOT DEEP WILL BE POSITIONED AT THE CENTER OF THE DAM.

E- MAXIMUM HEIGHT WILL BE 4 FEET (FROM LOWEST POINT ALONG CENTERLINE OF DAM TO CREST OF WIER).

F- MINIMUM TOP WIDTH SHALL BE 5 FEET.

5- CONSTRUCTION METHODS: LOG CHECK DAMS WILL BE CONSTRUCTED FROM THE NATURAL MATERIALS AVAILABLE FROM THE CLEARING AND GRUBBING OPERATIONS. IF THE CLEARING AND GRUBBING ACTIVITIES ARE COMPLETE AND THE MATERIAL DISPOSED, THE CONTRACTOR MUST OBTAIN THIS MATERIAL FROM THE SOURCE OF HIS CHOOSING.

THE CONTRACTOR MAY OBTAIN THE ROCK NECESSARY FOR THIS CHECK DAM FROM THE UNCLASSIFIED EXCAVATION IF AVAILABLE OR FROM A BORROW PIT. THE CONTRACTOR MUST CLEAR THE SITE FOR CONSTRUCTION OF THE CHECK DAM AND EXCAVATE THE KEY ACCORDING TO THE ABOVE TYPICAL.

ANY OTHER TYPES OF MATERIALS AND METHODS UTILIZED TO CONSTRUCT CHECK DAMS MUST BE CLEARLY ILLUSTRATED IN THE CONTRACTOR'S EROSION CONTROL PLAN AND THUS, CAN BE REVIEWED AND APPROVED, APPROVED WITH MODIFICATIONS, OR DISAPPROVED IN CONJUNCTION WITH THE TOTAL PLAN. IN SOME CASES IT MIGHT BE ADVANTAGEOUS TO BUILD A SMALL NON-REINFORCED CONCRETE CHECK DAM SIMILAR TO THE VERTICAL LOG OR POLE STRUCTURE.

HAY OR STRAW CHECK DAMS:

1- DEFINITION: BALES OF HAY OR STRAW USED AS A MEANS OF CONTROLLING POLLUTION AND EROSION.

2- PURPOSE: TO OBSTRUCT THE FLOW OF WATER TO ALLOW DEPOSIT OF SEDIMENT AND/OR DIVERT WATER TO A SLOPE DRAIN, SEDIMENT BASIN, SEDIMENT TRAP, OR OTHER EROSION CONTROL STRUCTURE.

3- CONDITIONS WHERE APPLICABLE:

A- USE AT THE BOTTOM OF EMBANKMENT SLOPES TO DIVERT RUNOFF FROM SHEET FLOW AND ALSO CATCH SOME OF THE SEDIMENT PICKED UP IN THE SHEET FLOW.

B- AS CHECK DAMS IN SMALL DITCHES AND DRAINAGE AREAS.

C- ON THE LOWER SIDE OF CLEARED AREAS TO CATCH SEDIMENT FROM SHEET FLOW.

D- AS WATERPROOF CORES FOR STONE SEDIMENT DAMS.

4- DESIGN CRITERIA: NONE

5- CONSTRUCTION METHODS:
BALES OF HAY OR STRAW WILL BE UTILIZED TO CONTROL EROSION, TRAP SEDIMENT, AND DIVERT RUNOFF AS DIRECTED AND APPROVED BY THE PROJECT ENGINEER. WHEN USED TO TRAP SEDIMENT OR DIVERT RUNOFF, THE BALES MUST BE ADEQUATELY BRACED FROM BEHIND.

EUREKA ENERGY

SUPERSEDES	
REVISIONS	
Date	Appr.

TEMPORARY EROSION CONTROL (CHECK DAMS)

RECOMMENDED FOR APPROVAL: Ralph E. Watson 9-25 1981
PROJECT ENGINEER Date
ACCEPTED
Gary A. Dunn Oct. 27 1981
EUREKA ENERGY

STD. DWG. NO. 1014

SEDIMENT STRUCTURES

SEDIMENT DAMS

1- GENERAL NOTES:

A. THE MAXIMUM HEIGHT OF THE DAM FROM THE LOWEST POINT ALONG THE CENTERLINE OF THE DAM TO THE CREST OF THE EMERGENCY SPILLWAY WILL NOT EXCEED 15'.

B. THE MINIMUM DAM THICKNESS AT THE TOP WILL BE AS FOLLOWS:

HEIGHT-FT.	THICKNESS
2' - 5'	10'
5' - 10'	12'
10' - 15'	14'

C. THE MINIMUM UPSTREAM SLOPE OF THE DAM WILL BE 3:1 AND THE MINIMUM DOWNSTREAM SLOPE WILL BE 5:1 EXCEPT WHEN AN EMERGENCY SPILLWAY IS PROVIDED AROUND THE END OF THE DAM ALLOWING THE DOWNSTREAM SLOPE TO BE 2:1.

D. THE DAM WILL BE CONSTRUCTED OF IMPERVIOUS MATERIAL, USUALLY A-6 OR A-7 WHEN AVAILABLE. WHERE SPILLWAYS ARE PROVIDED OVER THE DAM, THESE SPILLWAYS MUST BE LINED WITH ROCK TO PREVENT EROSION. IN CASES WHERE A STANDPIPE IS PROVIDED AND THE EMERGENCY SPILLWAY GOES AROUND THE END OF THE DAM NO ROCK WILL BE REQUIRED TO LINE THE DAM. IN CASES WHERE A STANDPIPE IS PROVIDED AND NO EMERGENCY SPILLWAY IS REQUIRED, THE TOP OF THE DAM AS WELL AS THE DOWNSTREAM FACE MUST BE LINED WITH ROCK.

E. FOR DAMS LESS THAN 5' IN HEIGHT AND A DRAINAGE AREA LESS THAN 20 ACRES, A CONDUIT SPILLWAY IS NOT REQUIRED.

F. FOR DRAINAGE AREAS LESS THAN 20 ACRES AN EMERGENCY SPILLWAY IS NOT REQUIRED.

G. COMBINED CAPACITY OF THE PIPE AND EMERGENCY SPILLWAYS WILL; WHERE APPLICABLE, BE DESIGNED TO HANDLE A TEN-YEAR FREQUENCY STORM. RUNOFF WILL BE FIGURED BY AN ACCEPTABLE METHOD AND SHOULD BE BASED ON SOIL COVER CONDITIONS EXPECTED TO PREVAIL DURING THE ANTICIPATED EFFECTIVE LIFE OF THE STRUCTURE.

IF A Q VALUE FOR A FREQUENCY OF OTHER THAN 10 YEARS IS AVAILABLE FOR THE DRAINAGE AREA, AND LESS THAN 25% OF THE AREA HAS BEEN DISTURBED, THE TEN-YEAR STORM CAN BE APPROXIMATED BY THE FOLLOWING TABLE:

$Q_{10} = 1.2\ Q_5$

$Q_{10} = 0.9\ Q_{25}$

$Q_{10} = 0.8\ Q_{50}$

H. THE DESIGN HEIGHT OF THE DAM WILL BE INCREASED 5% TO ALLOW FOR SETTLEMENT.

I. KEYWAYS ARE TO BE PROVIDED ON ALL DAMS OVER FIVE FEET IN HEIGHT. THIS KEYWAY IS TO BE A MINIMUM OF FIVE FEET WIDE AND TWO FEET DEEP, AND EXTEND THE FULL WIDTH OF THE CHANNEL, OR LENGTH OF THE DAM, PLUS UP EACH SLOPE TO THE HEIGHT OF THE DAM.

2- CONDUIT - PRINCIPAL SPILLWAY

A. IF THE PRINCIPAL SPILLWAY IS A CONDUIT THROUGH THE DAM, THE CONDUIT SHOULD BE DESIGNED TO CARRY A MINIMUM FLOW OF 0.21 C.F.S. PER ACRE OF WATERSHED WITH THE MINIMUM SIZE CONDUIT BEING A 18".

B. IF A CONDUIT SPILLWAY IS USED, AN EMERGENCY SPILLWAY MUST BE PROVIDED WHEN THE DRAINAGE AREA EXCEEDS 20 ACRES. THE CREST ELEVATION OF THE EMERGENCY SPILLWAY MUST BE AT LEAST 1.5' ABOVE THE CREST ELEVATION OF THE PRINCIPAL SPILLWAY.

CONDUIT-PRINCIPAL SPILLWAY CONT.

C. WHEN THE PRINCIPAL SPILLWAY DESIGN IS A STANDPIPE ATTACHED TO A CONDUIT THE FOLLOWING MINIMUM REQUIREMENTS WILL BE OBSERVED:

DRAINAGE AREA-ACRES	PIPE CONDUIT DIA.-INCHES	STANDPIPE DIA.-INCHES	SQ. DROP INLET DIMENSIONS (FT.)	MINIMUM STANDPIPE HEIGHT (FT.)
0 - 100	18	30	2 x 2	3.0
100 - 150	24	36	2.5 x 2.5	4.0
150 - 200	30	42	3 x 3	5.0

3- RISER

A. THE CROSS-SECTIONAL AREA OF THE RISER MUST BE AT LEAST 1.5 TIMES THE CROSS-SECTIONAL AREA OF THE CONDUIT.

B. THE TOP 1/2 TO 2/3 OF THE RISER OR DROP INLET WILL BE PERFORATED WITH 1 1/2 INCH DIAMETER HOLES SPACED 8" VERTICALLY AND 10" TO 12" HORIZONTALLY.

C. AN ANTIVORTEX DEVICE MUST BE PROVIDED CONSISTING OF A THIN, VERTICAL PLATE NORMAL TO THE CENTERLINE OF THE DAM AND FIRMLY ATTACHED TO THE TOP OF THE RISER. THE PLATE DIMENSIONS ARE:

LENGTH = DIAMETER OF THE RISER PLUS 12"
HEIGHT = DIAMETER OF THE CONDUIT

D. THE RISE SHALL HAVE AN ATTACHED BASE WITH SUFFICIENT WEIGHT TO PREVENT FLOTATION OF THE RISER. TWO ACCEPTABLE BASES ARE:

1- A CONCRETE BASE 18" THICK WITH THE RISER IMBEDDED 6" INTO THE BASE. THE BASE SHOULD BE SQUARE WITH EACH DIMENSION 1 FT GREATER THAN THE RISER DIAMETER.

2- A 1/4" MINIMUM THICKNESS STEEL PLATE WELDED ALL AROUND THE BASE OF THE RISER TO FORM A WATERTIGHT CONNECTION. THE PLATE SHALL BE SQUARE WITH EACH SIDE EQUAL TO 2 TIMES THE RISER DIAMETER. THE PLATE SHALL HAVE 2' OF STONE, GRAVEL OR TAMPED EARTH PLACED ON IT TO PREVENT FLOTATION.

E. TRASH RACKS MUST BE ATTACHED TO THE TOP OF THE RISER WITH OPENINGS NO LARGER THAN 3/4 OF THE CONDUIT DIAMETER AND NO SMALLER THAN 4 INCHES.

F. THE LOWER 1/3 OF THE RISER MUST BE COVERED IN A CONE SHAPED MANNER WITH SUITABLE FILTER MATERIAL.

G. A MINIMUM OF ONE ANTI SEEP COLLAR MUST BE UTILIZED ON EACH CONDUIT THROUGH A SEDIMENT DAM AND SHOULD BE LOCATED AT THE CENTERLINE OF THE DAM.

4- EMERGENCY SPILLWAY

A. THE TOP OF THE DAM MUST BE AT LEAST 1' ABOVE THE MAXIMUM DESIGN FLOW ELEVATION OF THE EMERGENCY SPILLWAY.

B. THE MINIMUM BOTTOM WIDTH OF AN EMERGENCY SPILLWAY IS 8'.

C. THE MINIMUM LEVEL DISTANCE OF THE EMERGENCY SPILLWAY IN THE DIRECTION OF FLOW IS 20' UNLESS THE EMERGENCY SPILLWAY GOES OVER THE DAM.

D. THE EMERGENCY SPILLWAY MUST BE PLACED IN UNDISTURBED GROUND AND CANNOT BE PLACED IN EMBANKMENT AREAS.

TYPICAL SEDIMENT DAM
WITH PRINCIPAL SPILLWAY

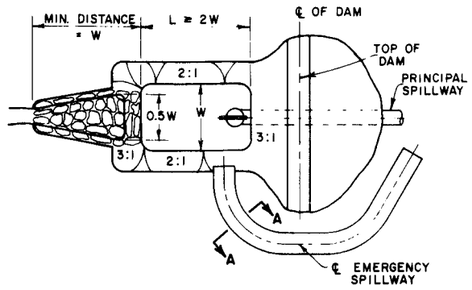

PLAN VIEW

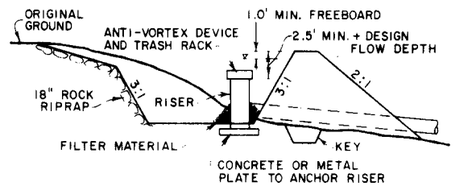

SIDE VIEW

TYPICAL SEDIMENT DAM
WITHOUT CONDUIT SPILLWAY

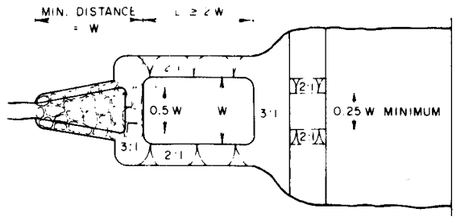

PLAN VIEW

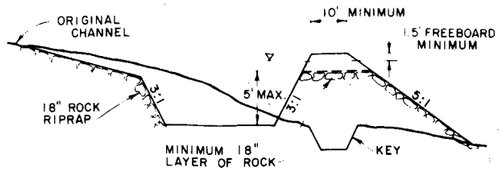

SIDE VIEW

EMERGENCY SPILLWAY

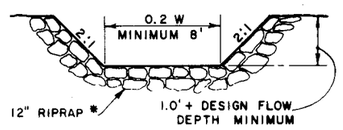

SECTION A-A

ROCK RIPRAP NOT REQUIRED IN OUTLET CHANNEL IF VELOCITY IS LESS THAN 6 F.P.S.
IF EMERGENCY SPILLWAY HAS TO BE BUILT OVER THE SEDIMENT DAM, THE DAM MUST BE LINED WITH AT LEAST 18" OF ROCK AND THE DOWNSTREAM FACE OF THE DAM MUST BE 5:1 SLOPE.

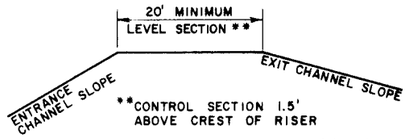

EMERGENCY SPILLWAY PROFILE

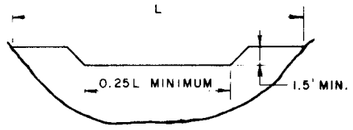

FRONT VIEW OF DAM

NO EMERGENCY SPILLWAY DESIGN
DOWNSTREAM FACE- 5:1 SLOPE LINED WITH ROCK

DETAIL OF KEYWAY

SEE SEDIMENT DAMS; GENERAL NOTE I

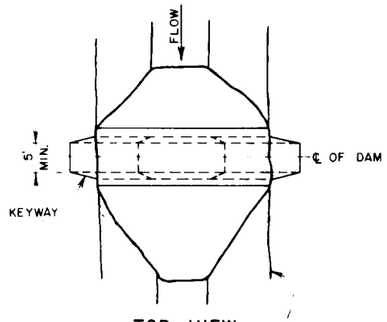

TOP VIEW

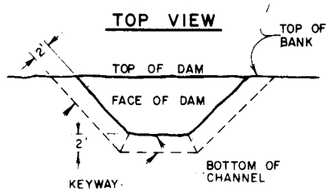

FRONT VIEW

SEDIMENT BARRIERS

1- "POST AND MESH" INSTALLATIONS SHALL BE SUPPORTED BY GALVANIZED STEEL WIRE MESH (14 GAGE MIN., 6" x 6" OPENINGS MAXIMUM) AND WOOD OR STEEL POSTS 5' IN LENGTH.

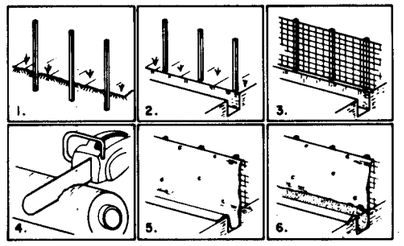

2- "BRUSH BARRIER" INSTALLATIONS SHALL BE SUPPORTED BY EITHER WINDROWS OF BRANCHES, BRUSH OR SIMILAR MATERIAL; OR BY ROWS OF STRAW BALES.

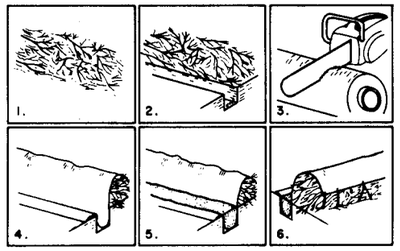

3- GENERAL NOTES:

A- FILTER FABRIC: STANDARD BURLAP (7-1/2 OZ. PER SQUARE FOOT) MAY BE USED FOR INSTALLATIONS OF SHORT DURATION. MORE ROT-RESISTANT FABRICS ARE ADVISED FOR INSTALLATION PERIODS IN EXCESS OF 2 TO 3 MONTHS. (NAMES OF SUGGESTED MANUFACTURES AND PRODUCTS ARE AVAILABLE UPON REQUEST.)

B- THE FABRIC IS CUT ON SITE TO THE DESIRED WIDTH, UNROLLED ALONG THE LENGTH OF THE BARRIER AND DRAPED OVER THE BARRIER. THE FABRIC TOE IS SECURED WITH ROCKS OR DIRT AND THE FABRIC COVERING THE BARRIER IS SECURED TO THE BARRIER WITH TWINE, STAPLES, OR SIMILAR DEVICES.

C- AFTER THE CONSTRUCTION AREA IS STABILIZED AND EROSION ACTIVITY CURTAILED, THE SEDIMENT BARRIERS ARE REMOVED AND THE CONTAINED SEDIMENT IS LEVELED, SEEDED, AND MULCHED. SPECIAL PROTECTION OF THE SEED BED MAY BE NECESSARY IF THE LAYERS ARE OVER A FOOT THICK.

EUREKA ENERGY

SUPERSEDES	
REVISIONS	
Date	Appr.

TEMPORARY EROSION CONTROL (SEDIMENT STRUCTURES)

RECOMMENDED FOR APPROVAL
Ralph Eustson — 9-25 19 81
PROJECT ENGINEER — DATE
ACCEPTED
George A. Dam — Oct 27 19 81
EUREKA ENERGY

STD. DWG. NO. 1013

SEDIMENT STRUCTURES

SEDIMENT STRUCTURES

1 - SEDIMENT TRAPS

A. DEFINITION:

A SMALL EXCAVATED STORAGE AREA WITHOUT SPECIAL INLET AND OUTLET CONTROLS OR DEFINED SIDE SLOPES AND IS LIMITED TO DRAINAGE AREAS OF 10 ACRES OR LESS.

B. DESIGN CRITERIA:

1 - MINIMUM WIDTH 5' AND MAXIMUM WIDTH 20'

2 - MINIMUM LENGTH 25' AND MAXIMUM LENGTH 200'

3 - MINIMUM DEPTH 2' AND MAXIMUM DEPTH 6'

2 - SEDIMENT PONDS

A. DEFINITION:

AN EXCAVATED STORAGE AREA WITH ROCK RIPRAP PLACED IN INLET AND OUTLET AREAS WITH DEFINED SIDE SLOPES AND IS LIMITED TO DRAINAGE AREAS OF 50 ACRES OR LESS.

B. DESIGN CRITERIA:

1 - INLET AND OUTLET CHANNELS MUST BE LINED WITH RIPRAP.

2 - SIDE SLOPES SHOULD BE 2:1

3 - LIMITED TO A MINIMUM WIDTH OF 20' AND A MINIMUM DEPTH OF 4' BUT NOT TO EXCEED 10'.

3 - SEDIMENT BASINS

A. DEFINITION:

CONSISTS OF A DAM CREATED TO IMPOUND WATER WITH OR WITHOUT AN EXCAVATED STORAGE AREA AND LIMITED TO DRAINAGE AREAS OF 200 ACRES OR LESS.

B. DESIGN CRITERIA:

1 - SHOULD BE DESIGNED TO ACCOMMODATE 1/2" OF RUNOFF FROM THE ENTIRE DRAINAGE AREA. THE REQUIRED VOLUME IN CUBIC FEET CAN BE OBTAINED BY MULTIPLYING THE DRAINAGE AREA IN ACRES BY 1,815.

2 - THE LENGTH SHOULD BE AT LEAST TWICE THE WIDTH AND A MINIMUM OF 50' LONG AND SHOULD HAVE A MINIMUM DEPTH OF 6'.

3 - WHEN POSSIBLE, THE MINIMUM AREA OF THE WATER SURFACE AT THE PRINCIPAL OUTLET ELEVATION SHOULD CONFORM TO THE FOLLOWING:

A (SQ. FT.) = 180 Q (CU. FT. PER SEC)

WHERE Q IS BASED ON A 5-YEAR FREQUENCY. IF A Q VALUE IS AVAILABLE FOR THE DRAINAGE AREA FOR A FREQUENCY OTHER THAN 5-YEARS, THE Q VALUE FOR A 5-YEAR FREQUENCY CAN BE APPROXIMATE USING THE FOLLOWING TABLE:

$Q_5 = 0.85\ Q_{10}$

$Q_5 = 0.75\ Q_{25}$

$Q_5 = 0.65\ Q_{50}$

IT SHOULD BE NOTED THAT RUNOFF CALCULATIONS TO SIZE PIPE ORDINARLY ASSUME FOREST OR MEADOWS IN RURAL AREAS. THEREFORE IF THE DRAINAGE AREA EXCEEDS 20 ACRES AND MORE THAN 25% OF THIS AREA HAS BEEN DISTURBED THE RUNOFF SHOULD BE RECALCULATED BASED ON ACTUAL CONDITIONS.

4 - GENERAL NOTES

A. PURPOSE:

SEDIMENT BASINS, PONDS, AND TRAPS ARE CONSTRUCTED TO TRAP AND STORE SEDIMENT FROM ERODIBLE AREAS IN ORDER TO PROTECT PROPERTIES AND STREAM CHANNELS BELOW THE INSTALLATION FROM EXCESSIVE SILTATION. THESE STRUCTURES TRAP AND STORE SEDIMENT THAT UNAVOIDABLY OCCURS IN SPITE OF TEMPORARY EROSION CONTROL MEASURES IN USE.

B. CONDITIONS WHERE APPLICABLE:

SEDIMENT BASINS, PONDS, AND / OR TRAPS SHOULD BE CONSTRUCTED AT ALL LOCATIONS WHERE WATER IS CONCENTRATED AND HAS BEEN COLLECTED FROM AN AREA WHERE IT WILL PICK UP PARTICLES. SEDIMENT STRUCTURES SHOULD BE CONSTRUCTED AS CLOSE AS POSSIBLE TO THE SOURCE OF SEDIMENT. WHEN POSSIBLE, SEDIMENT STRUCTURES SHOULD BE BUILT OUTSIDE THE EXISTING WATERCOURSES TO MINIMIZE THE QUANTITY OF WATER TO BE TREATED.

C. IN SOME AREAS THE MINIMUM DESIGN CRITERIA AS DEFINED HEREIN MAY BE UNFEASIBLE OR IMPOSSIBLE TO MEET. IN THESE CASES SEDIMENT STRUCTURES SHOULD BE CONSTRUCTED AS CLOSE AS POSSIBLE TO THE SPECIFIED DESIGN CRITERIA. UNDER THESE CIRCUMSTANCES IT WOULD BE DESIRABLE TO BUILD SEVERAL SMALL SEDIMENT STRUCTURES IN A SERIES TO ELIMINATE THE NEED FOR THE ONE LARGE STRUCTURE.

D. IN SPECIAL CASES WHERE SEDIMENT WOULD AFFECT HIGH QUALITY STREAMS THE STORAGE VOLUME, SURFACE AREA, AND DESIGN QUALITY OF DISCHARGE SHOULD BE INCREASED TO ASSURE THE CONTINUED HIGH QUALITY.

E. ALL SEDIMENT STRUCTURES MUST BE LOCATED AND DESIGNED SUCH THAT FAILURE OF THE STRUCTURE WOULD NOT RESULT IN LOSS OF LIFE; DAMAGE TO HOMES, COMMERCIAL OR INDUSTRIAL BUILDINGS, HIGHWAYS AND STREETS; OR IN INTERRUPTION OF THE USE OF SERVICE OR PUBLIC UTILITIES.

F. IN AREAS WHERE SEDIMENT STRUCTURES ARE CONSIDERED BY THE ENGINEER TO BE A SAFETY HAZARD TO THE PUBLIC OR TO CONSTRUCTION WORKERS, THEY ARE TO BE PROPERLY FENCED OR PROVIDED WITH ADEQUATE WARNING SIGNS, WHICHEVER IS DIRECTED BY THE ENGINEER

TYPICAL SEDIMENT TRAP

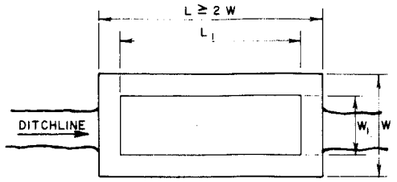

PLAN VIEW

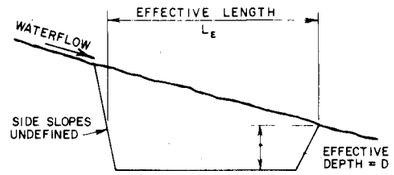

APPROXIMATION OF EFFECTIVE VOLUME

$$\frac{L_E\ W + L_1\ W_1}{2} + D$$

SIDE VIEW

DRAIN INLET SEDIMENT TRAPS

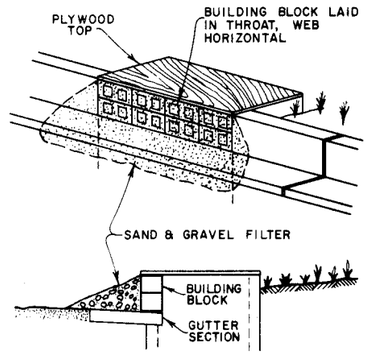

SAND AND GRAVEL FILTER INLET SEDIMENT TRAP

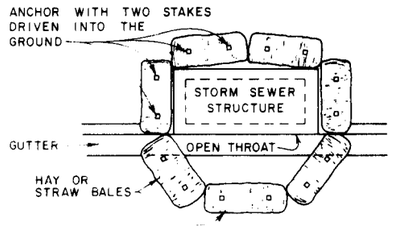

TEMPORARY BARRIER HAY OR STRAW BALES

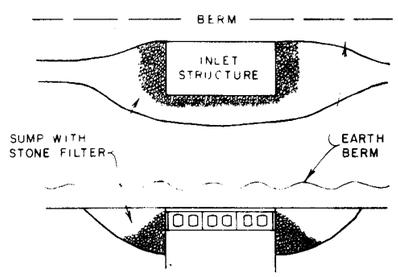

TEMPORARY SUMP — STONE FILTER INLET SEDIMENT TRAP

TYPICAL SEDIMENT POND

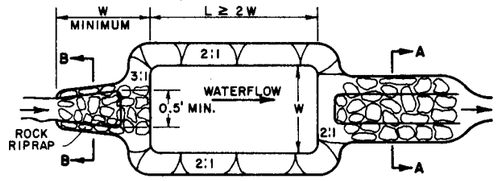

PLAN VIEW

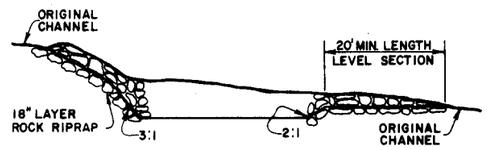

SIDE VIEW

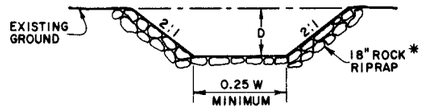

SECTION A-A

*WITH PROPER DESIGN CONSIDERATIONS, ROCK RIP-RAP CAN BE ELIMINATED IN OUTLET CHANNEL.

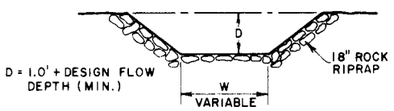

$W_{VARIABLE}$ - VARIES FROM WIDTH OF STREAM AT INLET TO ONE-HALF WIDTH OF POND AT OUTLET.

SECTION B-B

EUREKA ENERGY

SUPERSEDES

REVISIONS

Date Appr.

TEMPORARY EROSION CONTROL (SEDIMENT STRUCTURES)

RECOMMENDED FOR APPROVAL

PROJECT ENGINEER — Date 9-25 1981

ACCEPTED

EUREKA ENGINEER — Oct 27 1981

STD. DWG. NO. 1012

TEMPORARY SLOPE DRAINS

METAL, FLEXIBLE RUBBER, OR PLASTIC PIPE

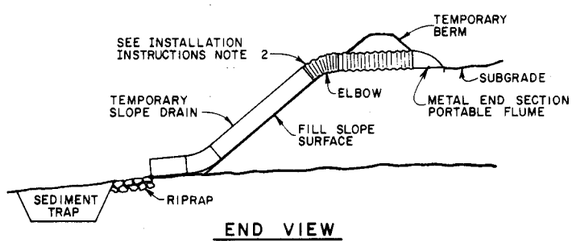

END VIEW

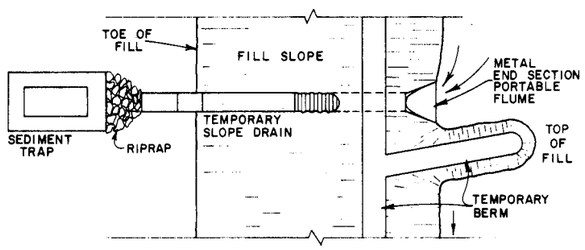

PLAN VIEW

TYPICAL INSTALLATION

FLEXIBLE SLOPE DRAIN

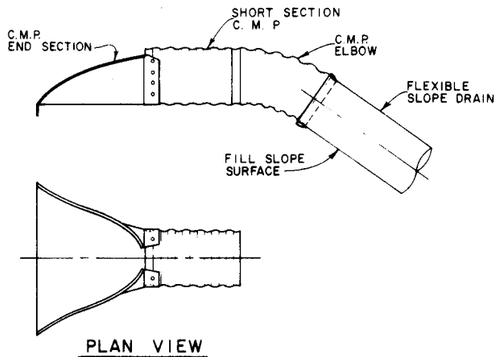

PLAN VIEW
C.M.P. END SECTION

TYPICAL DETAIL OF GROMMET ATTACHED TO FLEXIBLE PIPE

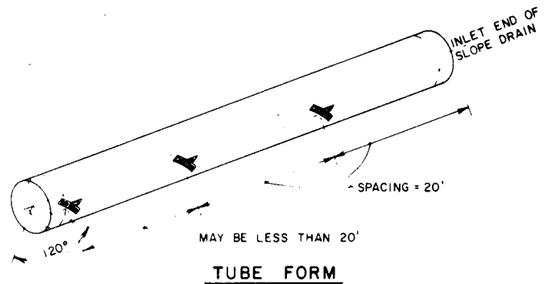

TUBE FORM

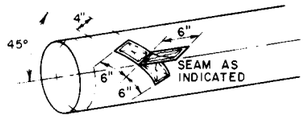

GROMMET DETAIL

EXAMPLE OF OPEN GUTTER SLOPE DRAIN

(HALF ROUND PIPE OR PLASTIC LINED)

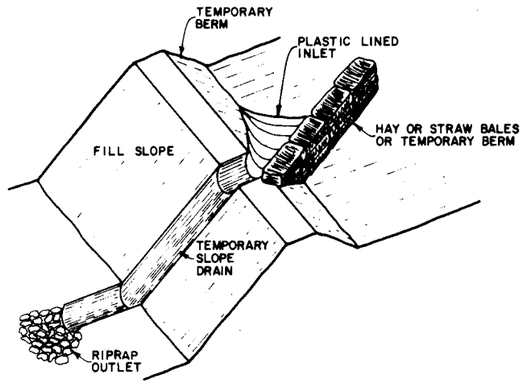

CORRUGATED METAL PIPE

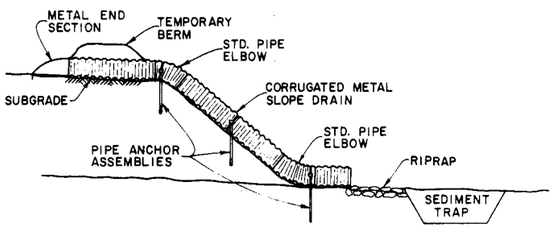

END VIEW

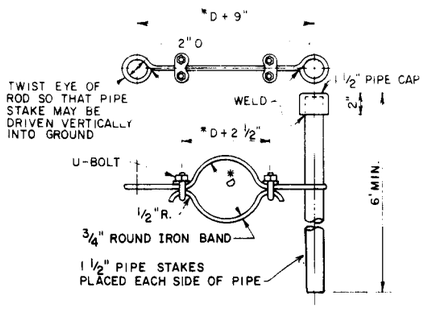

PIPE
ANCHOR ASSEMBLY

NOTES:

PIPE ANCHORS TO BE PLACED ON EACH ELBOW AND AT 10'± INTERVALS ALONG SLOPE DRAIN AS DIRECTED BY THE ENGINEER

A PIPE ANCHOR CONSISTS OF AN IRON BAND, 2 PIPE STAKES, AND ALL NECESSARY HARDWARE.

* D = DIAMETER OF PIPE PLUS 1/2"

DESIGN CRITERIA:

FOR SLOPE DRAINS CONSTRUCTED AT 1000 FOOT INTERVALS THE FOLLOWING ARE MINIMUM REQUIREMENTS.

A. USE 8" SMOOTH CONDUIT OR 12" CORRUGATED CONDUIT

B. MINIMUM SIZE HALF-ROUND SECTIONS OF PIPE SHALL BE 18"

C. FIBER MATTING AND PLASTIC SHEETING SHOULD NOT BE UTILIZED ON SLOPES STEEPER THAN 4:1 EXCEPT FOR, SHORT DISTANCES, 20' OR LESS, WHERE WATER CANNOT REACH EROSIVE VELOCITIES.

D. MINIMUM BOTTOM WIDTH OF A TEMPORARY GUTTER WILL BE 2' WITH A MINIMUM DEPTH OF GUTTER OF 8" WITH 2:1 SIDE SLOPES.

WHERE TEMPORARY SLOPE DRAINS ARE REQUIRED AT THE END OF CUT SECTIONS IT MAY BE NECESSARY TO INCREASE THE SIZE OF THE PIPE, HALF ROUND SECTION, OR GUTTER TO ACCOMMODATE A GREATER FLOW IF THE AREA TO BE DRAINED EXCEEDS 8 ACRES. THE CHART BELOW CAN BE USED AS A GUIDELINE FOR THE SIZES REQUIRED WHEN THE DRAINAGE AREA EXCEEDS 8 ACRES.

DRAINAGE AREA (ACRES)	SMOOTH PIPE SIZE	CORRUGATED PIPE SIZE	HALF ROUND PIPE SIZE	GUTTERS	
				DEPTH	WIDTH
0 — 8	8"	12"	18"	8"	2'
8 — 11	10"	15"	21"	1'	2'
12 — 16	12"	18"	24"	1'	4'
16 — 20	15"	21"	30"	1'	6'
20 — 24	18"	24"	36"	1'	8'

INSTALLATION INSTRUCTIONS

FLEXIBLE SLOPE DRAINS

1. FABRICATE ONE STAKE FOR EACH GROMMET. THE STAKES SHOULD BE MADE OF 1/2 INCH REINFORCING ROD OR EQUIVALENT. A CROSS PIECE OF 1/2 INCH ROD, 3 INCHES LONG, SHOULD BE WELDED 1 INCH FROM THE UPPER END OF THE STAKE. THE STAKE SHOULD BE ABOUT 1 FOOT LONG. IF USED IN SOFT OR SANDY SOILS THE STAKE MUST BE LONGER.

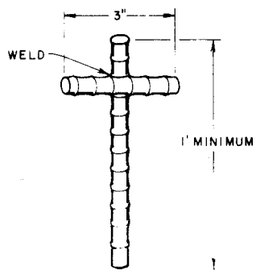

2. ATTACH THE INLET END OF THE SLOPE DRAIN TO THE CULVERT OUTLET WITH AN ELBOW AS SHOWN ABOVE.

3. UNROLL THE SLOPE DRAIN DOWN THE FILL SLOPE. MAKE SURE THAT THE OUTLET END IS ON SOLID GROUND, PREFERABLY ROCK. MAKE SURE ALSO THAT THE SLOPE DRAIN IS NOT IN A DITCH, IN A POSITION WHERE SLOUGH IS LIKELY TO COVER IT.

4. ONE STAKE REQUIRED FOR EACH GROMMET.

TEMPORARY PIPE

1. DEFINITION: A CONDUIT UTILIZED TEMPORARILY TO CARRY WATER UNDER A HAUL ROAD OR SEDIMENT DAM.

2. PURPOSE: TEMPORARY PIPE MAY BE USED AS THE PRINCIPAL SPILLWAY TO CARRY WATER THROUGH A SEDIMENT DAM AFTER THE SUSPENDED SOLIDS HAVE SETTLED OUT. THEY CAN ALSO BE USED TO PREVENT THE CONTRACTOR'S EQUIPMENT FROM COMING INTO DIRECT CONTACT WITH THE WATER WHEN CROSSING AN ACTIVE OR INTERMITTENT STREAM. AS WELL AS OTHER APPROVED PURPOSES.

3. DESIGN CRITERIA: THE SIZE OF TEMPORARY PIPE FOR USE AS PRINCIPAL SPILLWAYS SHALL BE DETERMINED IN ACCORDANCE WITH THE REQUIREMENTS SPECIFIED UNDER SEDIMENT BASINS ON STD. DWG. NO. 1013.

   THE SIZE OF TEMPORARY PIPE UNDER HAUL ROADS WILL BE LEFT TO THE CONTRACTOR'S DISCRETION, BUT SHOULD ACCOMMODATE A MINIMUM Q BASED ON A TWO-YEAR STORM.

4. CONSTRUCTION METHODS: ALL TEMPORARY PIPE SHALL BE INSTALLED IN THE SAME MANNER AS PERMANENT PIPES ARE INSTALLED ON THE PROJECT.

EUREKA ENERGY

SUPERSEDES

REVISIONS
Date Appr.

TEMPORARY EROSION CONTROL (TEMPORARY SLOPE DRAINS)

RECOMMENDED FOR APPROVAL:
Ralph E. Watson — 9-25 1981
PROJECT ENGINEER — Date
ACCEPTED
Gerry A. Dunn — Oct 27 81
EUREKA ENERGY

STD DWG NO 1011

EMBANKMENT CONSTRUCTION UTILIZING SILTATION CONTROLS

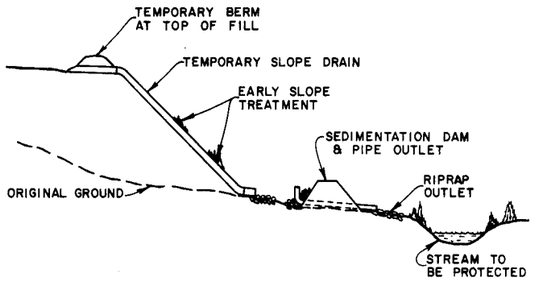

EXAMPLE OF PROTECTION

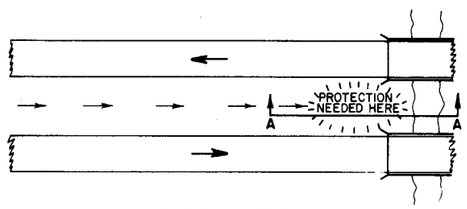

PLAN VIEW

TYPES OF PROTECTION

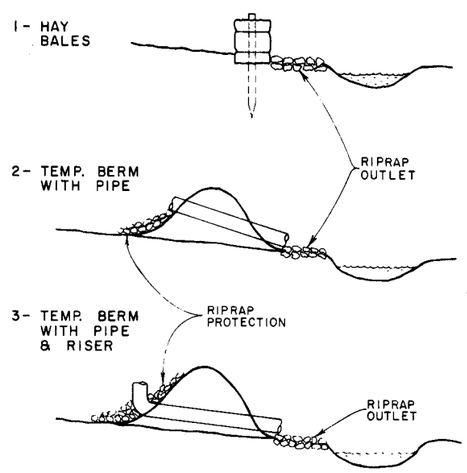

SECTION A-A

PROTECTION AT STREAM CROSSING MEDIAN & SIDE DITCHES

CONTOUR DITCHING

CROSS-SECTIONS

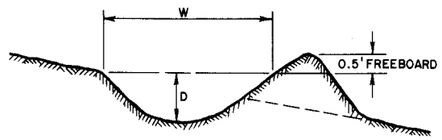

PARABOLIC

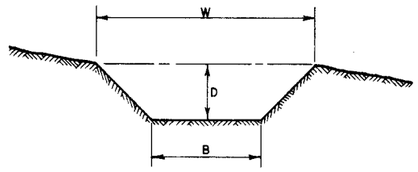

TRAPEZOIDAL

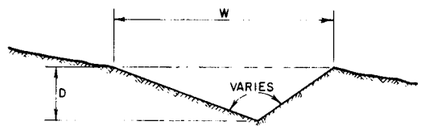

TRIANGULAR

DESIGN CRITERIA:

A. MAXIMUM GRADE — 1.5% IN BARE CHANNEL
2.5% IN VEGETATED CHANNEL
12 % IN ROCK-LINED CHANNEL

B. MINIMUM CHANNEL WIDTH (W) — 2 FEET

C. BACKSLOPE — 4:1 OR FLATTER

D. RIDGE SLOPE (CHANNEL SIDE) — 3:1 IF RIDGE IS UTILIZED

E. RIDGE SLOPE (DOWNHILL) — 2:1 OR FLATTER

F. MINIMUM DEPTH (D) — 1 FOOT

TEMPORARY BERMS

TYPE "A"

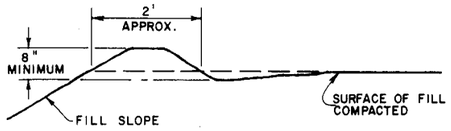

FILL BERM
END VIEW

TYPE "B"

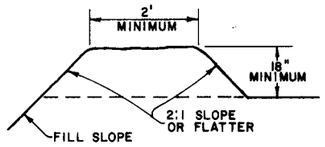

FILL BERM
END VIEW

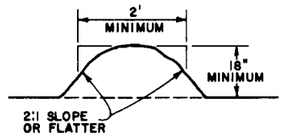

TRANSVERSE BERM
END VIEW

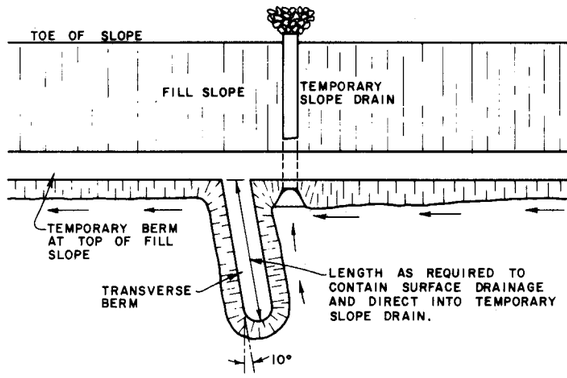

PLAN VIEW

DESIGN CRITERIA:

TYPE "B" TEMPORARY BERMS ARE DESIGNED TO ACCOMMODATE THE RUNOFF FROM APPROXIMATELY EIGHT (8) ACRES AND THE SPECIFIED INTERVAL FOR TEMPORARY SLOPE DRAINS OF 1000 FEET MAXIMUM WILL USUALLY KEEP THE DRAINAGE AREA WELL WITHIN THIS LIMITATION. IN SOME INSTANCES ON STEEP GRADES THE 1000 FOOT INTERVAL FOR TRANSVERSE TEMPORARY BERMS MAY BE INADEQUATE AND A CLOSER INTERVAL REQUIRED, AS DIRECTED BY THE PROJECT ENGINEER.

DIVERSION CHANNELS

SPECIFIC LINING SHALL BE LEFT TO THE CONTRACTORS CHOICE SUBJECT TO CONDITIONS STATED IN THE SPECIAL PROVISION COVERING THIS ITEM.

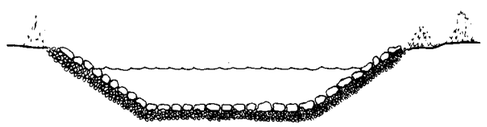

LARGE CHANNELS — USING RIPRAP LINING WITH GRAVEL FILTER MATERIAL

SMALL CHANNELS — USING GRAVEL

EUREKA ENERGY

SUPERSEDES

REVISIONS
Date Appr.

TEMPORARY EROSION CONTROL - CONTOUR DITCHING AND TEMPORARY BERMS

RECOMMENDED FOR APPROVAL:
PROJECT ENGINEER — Date 9-25 19 81
ACCEPTED
EUREKA ENERGY — Oct 27 19 81

STD. DWG. NO. 1010

SUPERELEVATION MINIMUM TRANSITION LENGTH

V=30 MPH						V=40 MPH					V=50 MPH					V=60 MPH						V=70 MPH						
D	R	E	W			D	E	W			D	E	W			D	E	W				D	E	W				
			20	30	40			20	30	40			20	30	40			20	30	40	50			20	30	40	50	60
0 15'	22918	NC	0	0	0	0 15'	NC	0	0	0	0 15'	NC	0	0	0	0 15'	NC	200	200	200	200	0 15'	RC	200	200	200	200	300
0 30'	11459	NC	0	0	0	0 30'	NC	0	0	0	0 30'	RC	150	150	0	0 30'	RC	200	200	200	200	0 30'	RC	200	200	200	250	300
0 45'	7639	NC	0	0	0	0 45'	RC	150	150	150	0 45'	RC	150	150	150	0 45'	RC	200	200	200	200	0 45'	.021	200	200	200	250	300
1 00'	5730	NC	0	0	0	1 00'	RC	150	150	150	1 00'	RC	150	150	150	1 00'	.023	200	200	200	250	1 00'	.028	200	200	250	350	400
1 30'	3820	RC	100	100	150	1 30'	RC	150	150	150	1 30'	.025	150	150	150	1 30'	.033	200	200	300	350	1 30'	.040	200	300	400	500	600
2 00'	2865	RC	100	100	150	2 00'	.023	150	150	150	2 00'	.031	150	200	200	2 00'	.041	200	250	350	450	2 00'	.050	250	400	500	600	700
2 30'	2292	RC	100	100	150	2 30'	.028	150	150	200	2 30'	.037	150	200	300	2 30'	.046	200	300	400	500	2 30'	.056	300	450	550	700	800
3 00'	1910	.022	100	150	150	3 00'	.032	150	150	250	3 00'	.042	150	250	350	3 00'	.053	250	350	450	600	3 00'	.060	300	450	600	750	900
3 30'	1637	.025	100	150	200	3 30'	.036	150	200	250	3 30'	.046	200	300	400	3 30'	.056	250	350	500	600	3 18'	.060	300	450	600	750	900
4 00'	1432	.027	100	150	200	4 00'	.039	150	200	300	4 00'	.050	200	300	400	4 00'	.059	250	400	500	650							
5 00'	1146	.032	150	200	250	5 00'	.045	200	250	350	5 00'	.056	250	350	450	4 36'	.060	250	400	500	650							
6 00'	955	.036	150	200	300	6 00'	.049	200	250	350	6 00'	.059	250	350	450													
7 00'	819	.040	150	250	300	7 00'	.053	200	300	350	6 54'	.060	300	350	500													
8 00'	716	.043	150	250	350	8 00'	.056	200	300	400																		
9 00'	637	.045	200	250	350	9 00'	.058	200	300	400																		
10 00'	573	.048	200	300	400	10 00'	.059	200	300	400																		
11 00'	521	.050	200	300	400	11 00'	.060	200	300	400																		
12 00'	477	.052	200	300	400	11 20'	.060	200	300	400																		
13 00'	441	.073	200	350	400																							
14 00'	409	.055	200	350	450																							
16 00'	358	.057	250	350	450																							
18 00'	318	.059	250	350	450																							
20 00'	286	.060	250	350	450																							
21 00'	273	.060	250	350	450																							

V - DESIGN SPEED.
D - DEGREE OF CURVATURE
R - RADIUS OF CURVE FEET.
E - SUPERELEVATION FOOT PER FOOT.
W - CROSS SECTIONAL DISTANCE IN FEET FROM AXIS OF ROTATION (NORMALLY THE CONTROL LINE) TO THE OUTER EDGE OF THE SHOULDER. USE THE GREATER SIDE AND ROUND UP TO A MULTIPLE OF 10.
L = TRANSITION LENGTH
NC = NORMAL CROWN
RC = REMOVE ADVERSE CROWN AND SUPERELEVATE AT NORMAL CROWN.

INSTRUCTIONS

1. USE SPIRALS WITH CURVES THAT FALL BELOW THE HEAVY LINE IN TABLE, DO NOT USE SPIRALS ON LOW VOLUME ROADS, FRONTAGE ROADS OR RAMPS REGARDLESS OF SUPER ELEVATION. IF SPIRALS ARE USED, THE SPIRAL LENGTH SHALL BE THE TRANSITION LENGTH.
2. ADJUST THE 0.6L AND 0.4L DIMENSIONS (SEE PROFILE SKETCH) SO THAT THE BEGIN AND END POINTS OF THE TRANSITION FALL ON EVEN OR HALF STATIONS. MAKE CROWN RUNOUT APPROX. 4W ADJUSTED TO A MULTIPLE OF 50' WHERE W IS THE VALUE DEFINED IN THE LEGEND.
3. CHECK FOR DRAINAGE IN THE ROADWAY WHERE THE CROSS SLOPE IS ZERO AND IN SIDE DITCHES.
4. THE LAST LINE OF EACH SECTION OF THE TABLE SHOWS MAXIMUM ALLOWABLE CURVATURE FOR THE GIVEN SPEED.
5. PLACE THE FOLLOWING INFORMATION CONSTRUCTION PLANS.
   RATE OF SUPPERELEVATION
   BEGIN AND END OF CROWN RUNOUT
   BEGIN AND END OF TRANSITION IF SPIRALS ARE NOT USED.

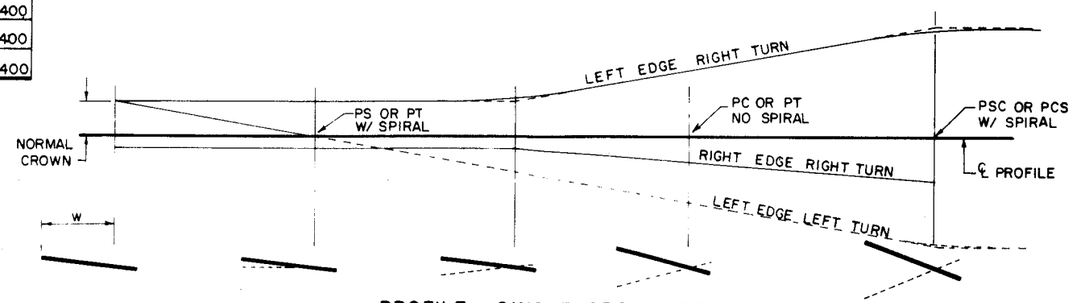

PROFILE - SINGLE CROWN ROAD

PAVEMENT WIDENING		
RADIUS ON INNER EDGE OF PAVEMENT	PAVEMENT WIDENING / FEET	
	1-LANE 1-WAY TURNING RDWY 14' PAVEMENT	2-LANE 2-WAY TURNING RDWY 24' PAVEMENT
50	6	11
75	4	8
100	3	6
150	2	5
200	2	3
300	1	2
400	1	2
500	1	1
TANGENT	0	0

CURVE WIDENING SHALL BE APPLIED TO THE INSIDE EDGE OF THE PAVEMENT WITH A SMOOTH TRANSITION EXTENDING THE SAME DISTANCE AS SUPERELEVATION RUNOFF.

NO WIDENING REQUIRED FOR 12' THROUGH TRAFFIC LANES WITHIN THE PERMISSIBLE LIMITS OF CURVATURE

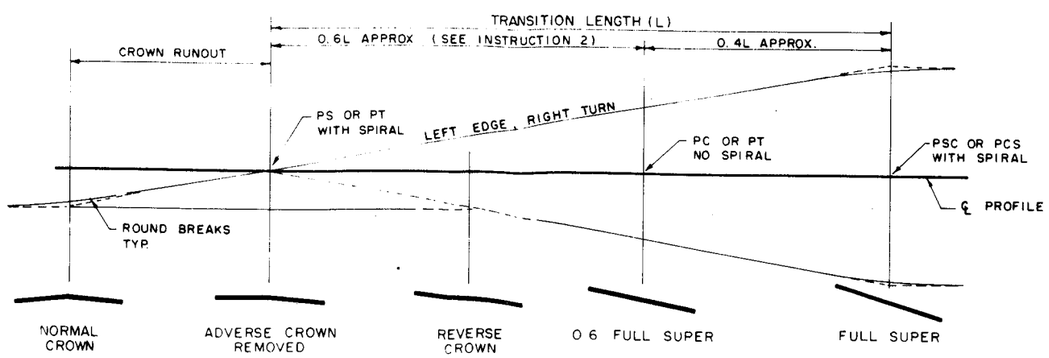

PROFILE - DOUBLE CROWN ROAD

10-14-80 R COLUMN UPPER LEFT

EUREKA ENERGY

SUPERSEDES
EX. 805 1A
" 1B
REVISIONS
Date Appr.
10 14 80

SUPERELEVATION AND WIDENING

RECOMMENDED FOR APPROVAL:
PROJECT ENGINEER — Date Oct 5 1981
ACCEPTED
EUREKA ENERGY — Oct 5 1981

STD. DWG. NO. 805-1

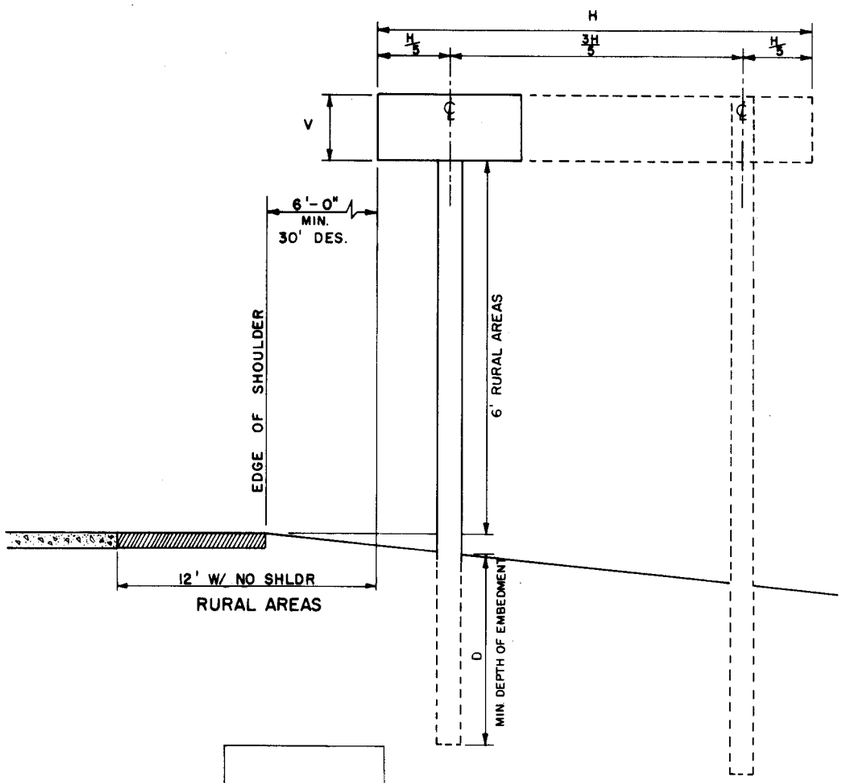

SIGN INSTALLATION

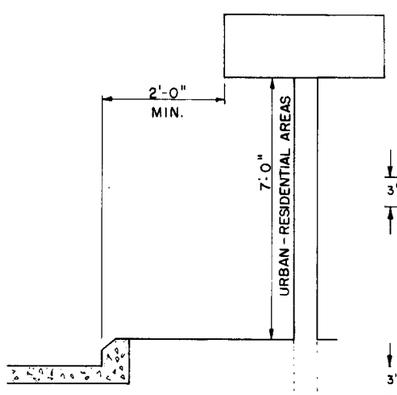

RESIDENTIAL - URBAN AREAS

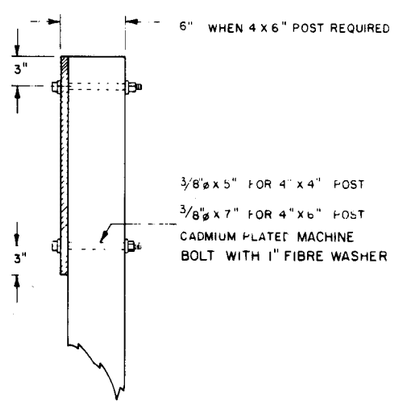

SIDE VIEW

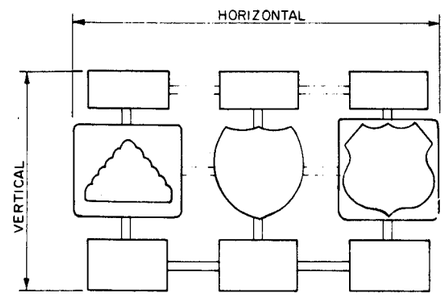

ROUTE MARKERS

SEE CHART FOR SIGN DIMENSIONS AND POSTS REQUIRED

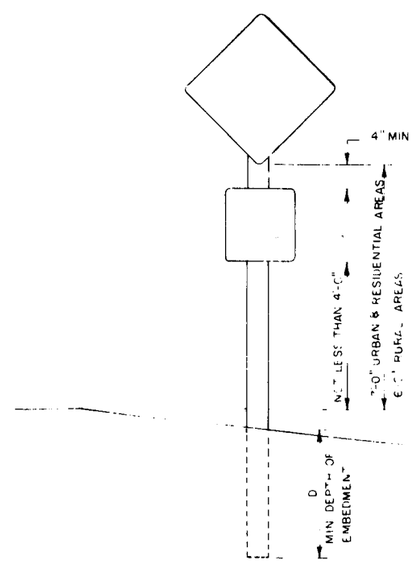

MULTIPLE SIGNS

SIGN AREA (SQ. FT.)	TYP. SIGN DIMENSIONS H HORIZONTAL (INCHES)	V VERTICAL (INCHES)	NUMBER OF POSTS REQUIRED	POST SIZE	EMBEDMENT (D) FEET
1.5	12	18	1	4 x 4	4
3.0	18	24	1	4 x 4	4
2.0	24	12	1	4 x 4	4
4.0	24	24	1	4 x 4	4
5.0	24	30	1	4 x 4	5
6.25	30	30	1	4 x 4	5
7.5	30	36	1	4 x 4	5
3.0	36	12	1	4 x 4	4
4.5	36	18	1	4 x 4	4
9.0	36	36	1	4 x 6	5
12.0	36	48	1	4 x 6	5
5.25	42	18	1	4 x 6	5
8.0	48	24	1	4 x 6	5
10.0	48	30	1	4 x 6	5
16.0	48	48	1	4 x 6	6
20.0	48	60	2	4 x 6	5
6.67	60	16	2	4 x 4	4
10.0	60	24	2	4 x 4	4
12.5	60	30	2	4 x 4	5
15.0	60	36	2	4 x 6	5
12.0	72	24	2	4 x 4	5
24.0	72	48	2	4 x 6	5
10.67	96	16	2	4 x 4	4
20.0	96	30	2	4 x 4	5
32.0	96	48	2	4 x 6	6

1. TRAFFIC SIGNS SHALL CONFORM TO THE REQUIREMENTS OF THE STANDARD SPECIFICATIONS
2. TIMBER POSTS SHALL CONFORM TO THE REQUIREMENTS OF THE STANDARD SPECIFICATIONS
3. MULTIPLE SIGN INSTALLATIONS, EXCLUDING ROUTE MARKERS, SHALL USE ONE 4"x6" POST.
4. DEPTH OF EMBEDMENT MAY BE REDUCED WITH WELL COMPACTED GRANULAR SOILS BUT NOT LESS THAN 4'-0"
5. SIGNS IN RESIDENTIAL OR URBAN AREAS SHALL HAVE A MINIMUM DISTANCE OF 2' FROM EDGE OF CURB TO EDGE OF SIGN

6 30 81 CHG OFFSET DIM
4 27 81 DEL REF TO SPEC SEC NO
1 9 79 PUT ON NOTE 5 AND REF URBAN DETAIL
1 4 77 30' DES OFFSET
12 6 74 FRAMED U.S. MARKER
6-1-71 CHANGED 'TAP' TO 'MACHINE' BOLT

EUREKA ENERGY

SUPERSEDES

REVISIONS

Date	Appr.
6-1-71	
12 6 74	
1 4 77	
1 9 79	
4 27 81	
6 30 81	

HIGHWAY SIGNS OTHER THAN FREEWAYS

RECOMMENDED FOR APPROVAL
PROJECT ENGINEER Oct 5 81
ACCEPTED
EUREKA ENERGY Oct 27 81

STD. DWG. NO. 745-60

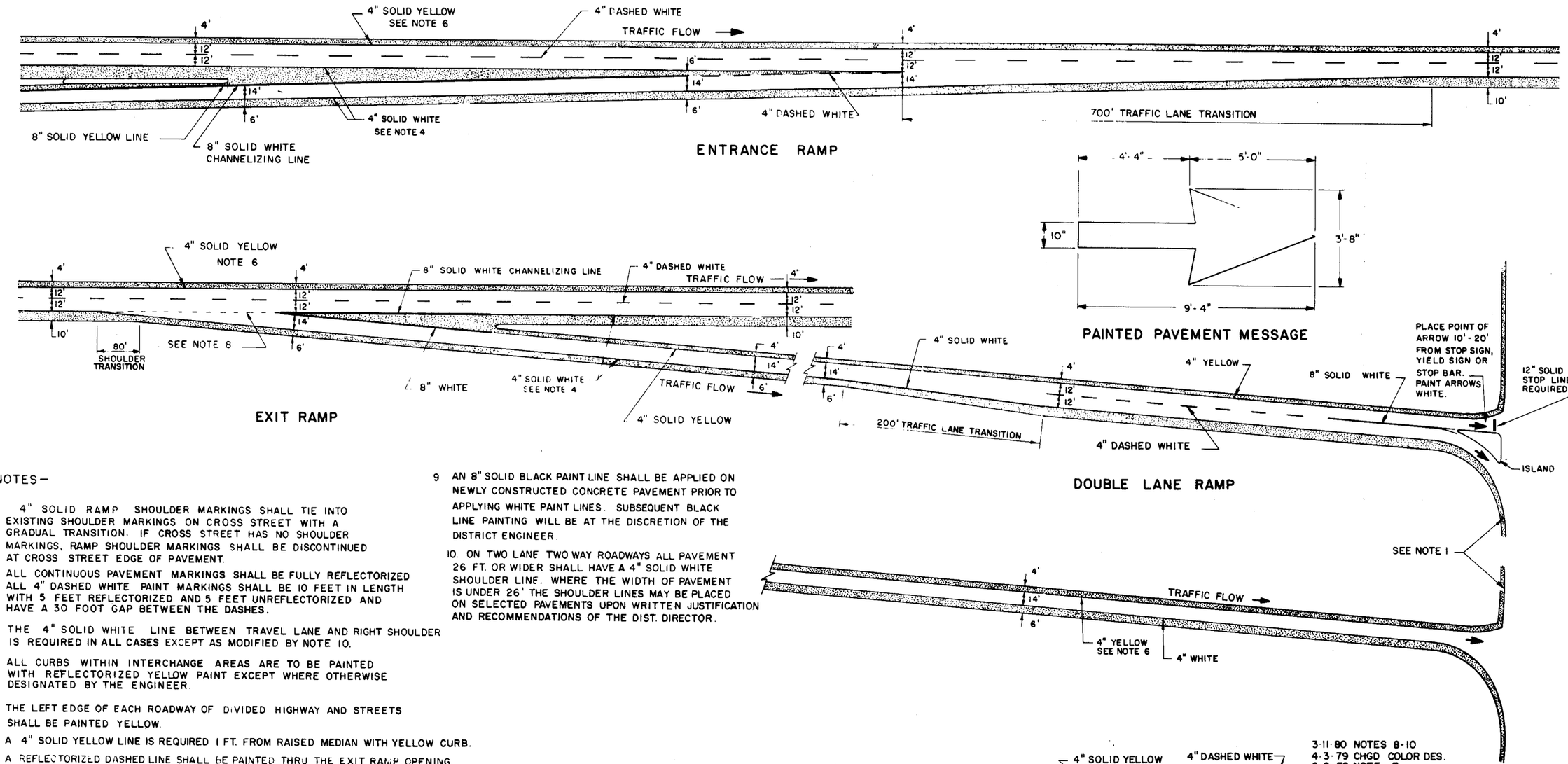

NOTES—

1. 4" SOLID RAMP SHOULDER MARKINGS SHALL TIE INTO EXISTING SHOULDER MARKINGS ON CROSS STREET WITH A GRADUAL TRANSITION. IF CROSS STREET HAS NO SHOULDER MARKINGS, RAMP SHOULDER MARKINGS SHALL BE DISCONTINUED AT CROSS STREET EDGE OF PAVEMENT.
2. ALL CONTINUOUS PAVEMENT MARKINGS SHALL BE FULLY REFLECTORIZED
3. ALL 4" DASHED WHITE PAINT MARKINGS SHALL BE 10 FEET IN LENGTH WITH 5 FEET REFLECTORIZED AND 5 FEET UNREFLECTORIZED AND HAVE A 30 FOOT GAP BETWEEN THE DASHES.
4. THE 4" SOLID WHITE LINE BETWEEN TRAVEL LANE AND RIGHT SHOULDER IS REQUIRED IN ALL CASES EXCEPT AS MODIFIED BY NOTE 10.
5. ALL CURBS WITHIN INTERCHANGE AREAS ARE TO BE PAINTED WITH REFLECTORIZED YELLOW PAINT EXCEPT WHERE OTHERWISE DESIGNATED BY THE ENGINEER.
6. THE LEFT EDGE OF EACH ROADWAY OF DIVIDED HIGHWAY AND STREETS SHALL BE PAINTED YELLOW.
7. A 4" SOLID YELLOW LINE IS REQUIRED 1 FT. FROM RAISED MEDIAN WITH YELLOW CURB.
8. A REFLECTORIZED DASHED LINE SHALL BE PAINTED THRU THE EXIT RAMP OPENING 2' IN LENGTH WITH 6' GAPS.
9. AN 8" SOLID BLACK PAINT LINE SHALL BE APPLIED ON NEWLY CONSTRUCTED CONCRETE PAVEMENT PRIOR TO APPLYING WHITE PAINT LINES. SUBSEQUENT BLACK LINE PAINTING WILL BE AT THE DISCRETION OF THE DISTRICT ENGINEER.
10. ON TWO LANE TWO WAY ROADWAYS ALL PAVEMENT 26 FT. OR WIDER SHALL HAVE A 4" SOLID WHITE SHOULDER LINE. WHERE THE WIDTH OF PAVEMENT IS UNDER 26' THE SHOULDER LINES MAY BE PLACED ON SELECTED PAVEMENTS UPON WRITTEN JUSTIFICATION AND RECOMMENDATIONS OF THE DIST. DIRECTOR.

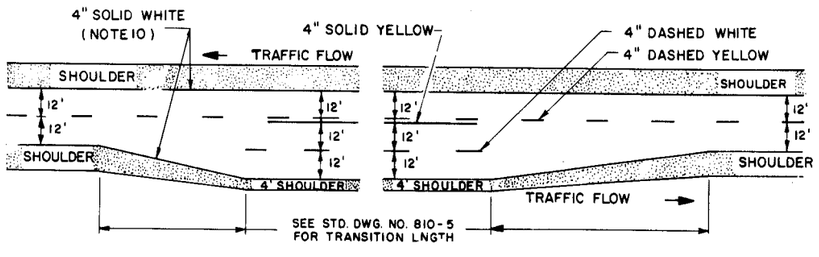

TWO LANE TWO WAY WITH TRUCK LANE

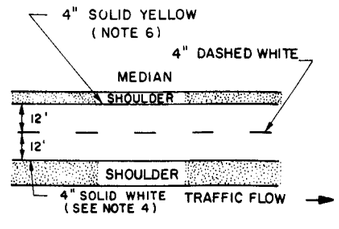

TWO LANES

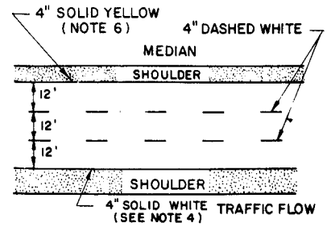

THREE LANES

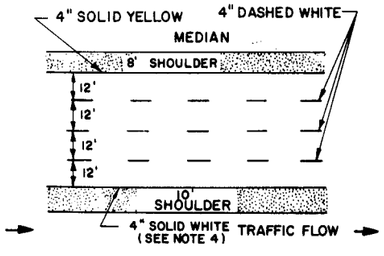

FOUR LANES

ROADWAY SECTIONS

3-11-80 NOTES 8-10
4-3-79 CHGD COLOR DES.
6-9-78 NOTE 7
5-9-78 CHANGED NOTE 4
2-23-78 WHITE ARROWS END OF RAMP
8-25-77 ADDED TRAFFIC FLOW ARROWS
6-5-77 CHANGED NOTE 3
3-8-77 YELLOW SHLDR - BLACK PAINT - REDRAWN

EUREKA ENERGY

SUPERSEDES

REVISIONS

Date	Appr.
3-8-77	
6-5-77	
8-25-77	
2-23-78	
5-9-78	
6-9-78	
4-3-79	
3-11-80	

TYPICAL PAVEMENT MARKINGS

RECOMMENDED FOR APPROVAL:
PROJECT ENGINEER — Date Oct 5 1981
ACCEPTED
EUREKA ENERGY — Oct 5 1981

STD. DWG. NO. 745-41

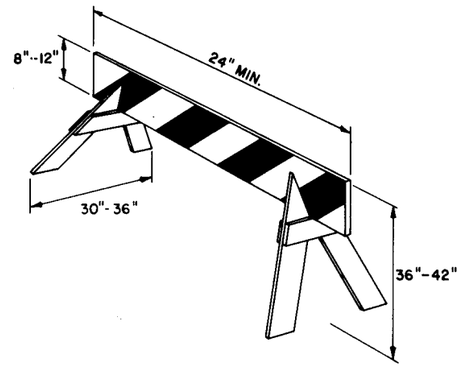

TYPE I

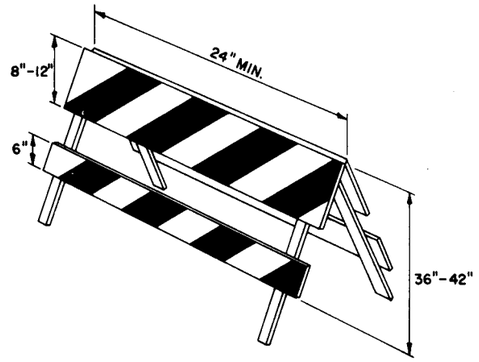

TYPE II

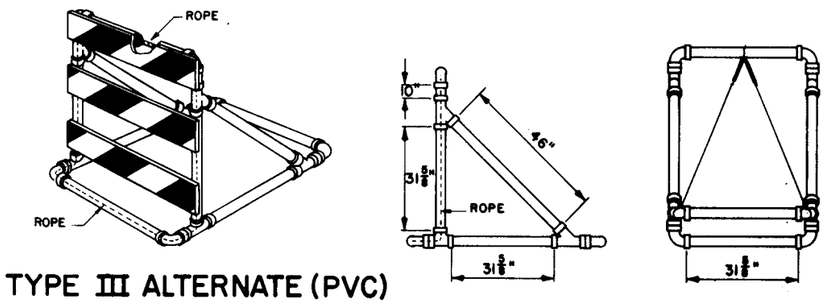

TYPE III ALTERNATE (PVC)

MATERIALS

30' - 3" PVC CONDUIT
6 - 3" PVC 90° ELBOWS
2 - 3" PVC TEES
4 - 3" PVC WYES
3 - 9" x 48" x .025" ANODIZED ALUMINUM FACE PANELS
12 - 1" NO. 14 PAN HEAD METAL SCREWS
15' - 3/16" NO. 6 SOLID BRAIDED NYLON ROPE
2 - 5/8" x 11" NO. 8 SPRING

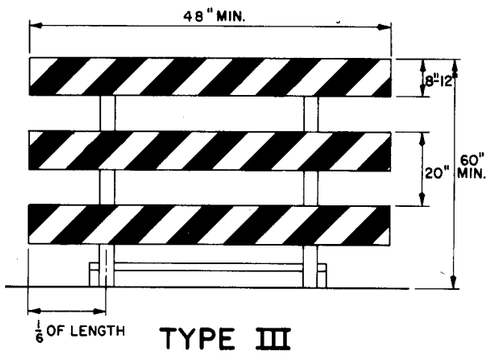

TYPE III

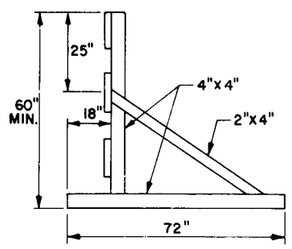

WOOD SUPPORT

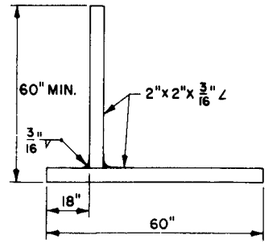

STEEL SUPPORT

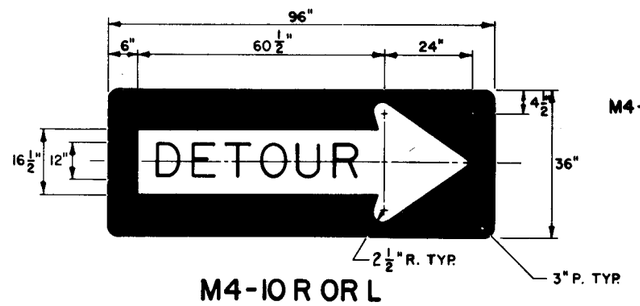

M4-10 R OR L

M4-10 R OR L: SERIES "D" LEGEND
BLACK LEGEND AND BACKGROUND
WITH REFLECTORIZED ORANGE ARROW.

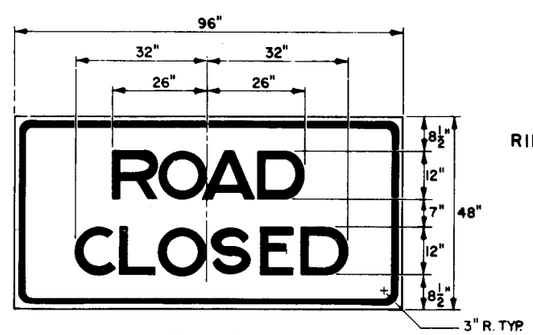

R11-2

R11-2: SERIES "D" LEGEND
BLACK LEGEND AND BORDER ON
REFLECTORIZE WHITE BACKGROUND.
ALTERNATE SIGN USE R11-4.

7·8·80 ENLARGED VIEW OF SIGN (LOWER LEFT)
9·11·79 TYPE III 48" MIN - 6" STRIPE (NOTE 1) (NOTE 9)
4·3·79 ADDED NOTE 8
8·15·78 CHANGED NOTE 5 ADDED NOTE 7
1-4-77 REDRAWN ADDED PVC BARRICADE

NOTES:

1. TYPE I, II & III BARRICADES: EACH BARRICADE RAIL SHALL BE MARKED WITH ALTERNATE REFLECTORIZED ORANGE AND WHITE STRIPES 6 INCHES IN WIDTH AND SLANTING DOWNWARD AT AN ANGLE OF 45°. ORANGE FLAGS MAY BE USED ON BARRICADES DURING DAYLIGHT HOURS. SEE NOTE 9
2. THE DETOUR BARRICADES SHALL CONSIST OF A R11-2 OR -4 ROAD CLOSED (96"x48"), TWO 96"x36" M4-10R OR M4-10L SIGNS POINTING IN THE DIRECTION TRAFFIC IS TO TURN, AND AS MANY TYPE III BARRICADES AS ARE NEEDED TO BARRICADE THE ROADWAY. ALL SIGNS AND BARRICADES SHALL BE REFLECTORIZED. THE DETOUR ROUTE SHALL BE COMPLETELY SIGNED WITH NECESSARY GUIDE AND WARNING SIGNS BEFORE REROUTING IS EFFECTED.
3. TYPE III BARRICADES MAY BE MOUNTED ON POSTS OR PORTABLE SUPPORTS AS DIRECTED BY THE ENGINEER. ALL SUPPORTS SHALL BE PROVIDED WITH SUFFICIENT BALLAST TO MAINTAIN BARRICADE IN INTENDED POSITION REGARDLESS OF CLIMATIC CONDITIONS OR WIND LOADS FROM PASSING TRAFFIC.
4. STRIPES SHALL SLANT DOWNWARD IN THE DIRECTION OF THE DETOUR WITH THE LETTER L OR R ADDED TO THE NUMBER.
5. TRAFFIC CONTROL DEVICES: ALL SIGNS, BARRICADES & OTHER DEVICES USED TO REGULATE, CONTROL, GUIDE OR WARN TRAFFIC SHALL CONFORM TO THE STANDARDS SET FORTH IN THE MANUAL ON UNIFORM TRAFFIC CONTROL DEVICES.
6. TYPE III ALTERNATE P.V.C. BARRICADE P.V.C CONDUIT SHALL BE TIED TOGETHER WITH ROPE THREADED INTO PIPE INTERIOR, AS INDICATED BY DOTTED LINE. USE # 6 3/16" DIA. SOLID BRAIDED NYLON OR EQUIVALENT
7. REFLECTORIZED ORANGE AND WHITE SHALL CONFORM TO STANDARD SPECIFICATIONS.
8. BALLAST SHALL NOT BE HIGHER THAN 12" ABOVE THE GROUND
9. FOR RAILS LESS THAN 3 FT. LONG USE 4" WIDE STRIPES.

EUREKA ENERGY

SUPERSEDES

REVISIONS

Date	Appr.
1-4-77	
8·15·78	
4·3·79	
9·11·79	
7·8·80	

CONSTRUCTION SIGNING BARRICADES

RECOMMENDED FOR APPROVAL: Ralph E. Williams Oct 5 1981
PROJECT ENGINEER Date
ACCEPTED: Gary A. Davis Oct 5 1981
EUREKA ENERGY

STD. DWG. NO. 745-1C

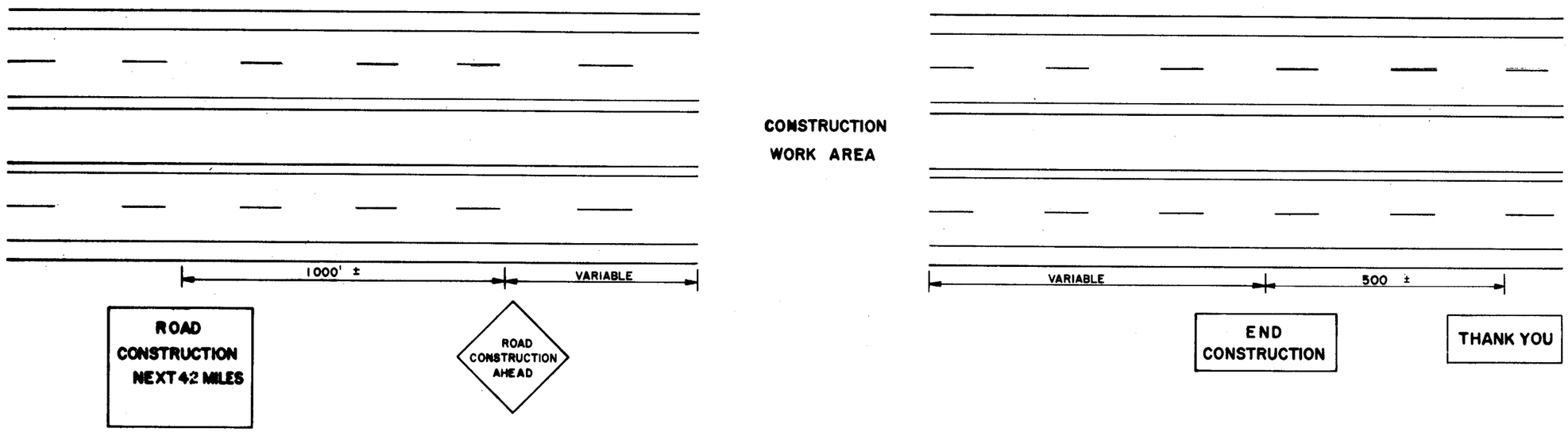

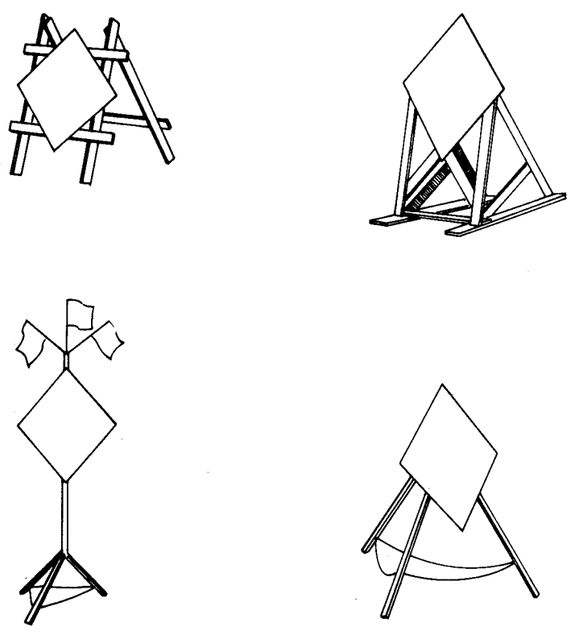

PORTABLE AND TEMPORARY MOUNTINGS

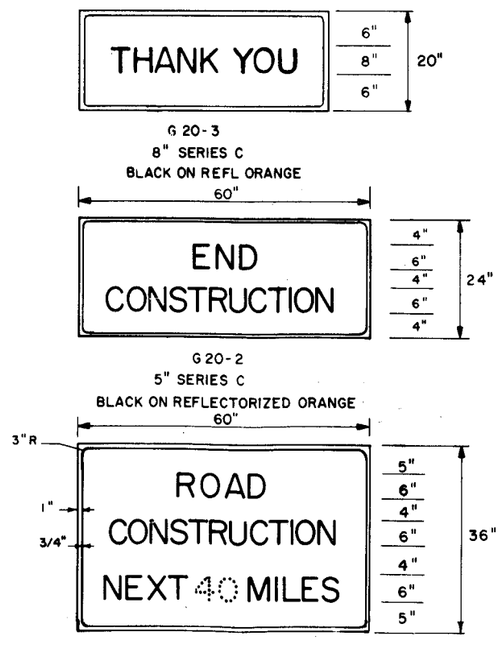

1. ALL SIGNS PLACED IN THE NORMAL TRAVELLED WAY SHALL BE CONSTRUCTED OF WOOD, PLASTIC OR FABRIC. METAL SIGNS SHALL NOT BE ALLOWED ON PORTABLE SUPPORTS.
2. ALL CONSTRUCTION PROJECTS THROUGH WHICH TRAFFIC MUST PASS, SHALL HAVE A BLACK ON REFLECTORIZED ORANGE G20-1 "ROAD CONSTRUCTION" ADVANCE NOTIFICATION SIGN MOUNTED ON POSTS. THIS SIGN SHALL ALSO BE SUPPLEMENTED BY A BLACK ON ORANGE "ROAD CONSTRUCTION AHEAD" SIGN ON POST(S). THE END OF "PASS THROUGH" CONSTRUCTION AREAS SHALL BE DESIGNATED BY THE BLACK ON REFLECTORIZED ORANGE (1) G20-2 "END CONSTRUCTION" SIGN AND (2) G 20-3 'THANK YOU'. ALL SIGNS SHALL BE MAINTAINED IN A CLEAN LEGIBLE PROPERLY MOUNTED INTACT CONDITION.
3. SPECIFIC REROUTING OR CHANNELIZING OF TRAFFIC THROUGH THE CONSTRUCTION WORK AREA SHALL COMPLY WITH THE MANUAL ON UNIFORM TRAFFIC CONTROL DEVICES OR AS DIRECTED BY THE ENGINEER.
4. ALL TRAFFIC CONTROL DEVICES USED TO REGULATE, CONTROL, GUIDE OR WARN TRAFFIC WHILE PASSING THROUGH THE CONSTRUCTION AREAS, SHALL CONFORM TO THE MANUAL ON UNIFORM TRAFFIC CONTROL DEVICES.
5. ALL TEMPORARY (PORTABLE MOUNTINGS) FOR CONSTRUCTION SIGNS SHALL HAVE SUFFICIENT BALLAST TO MAINTAIN THE INTENDED POSITION REGARDLESS OF CLIMATIC CONDITIONS OR WIND LOADS FROM PASSING TRAFFIC.
6. PORTABLE AND TEMPORARY SIGNS SHALL BE MOUNTED A MINIMUM OF 12" ABOVE THE ROADWAY TO BOTTOM OF SIGNS. SIGNS SHALL BE PLACED AT RIGHT ANGLES TO AND FACING THE LINE OF TRAFFIC THEY SERVE.
7. SEE STD. DWG. 745-60 FOR NO. OF POSTS REQUIRED FOR TEMPORARY INSTALLATION.
8. REFLECTORIZED ORANGE SHALL CONFORM TO STANDARD SPECIFICATIONS.
9. FABRIC SIGNS SHALL BE USED FOR DAYLIGHT OPERATIONS ONLY, IF WORK CONTINUES INTO NIGHTTIME, REFLECTORIZED SIGNS SHALL BE USED.

7-13-76 REMOVED CONTRACTOR'S NAME
8-15-73 ADDED NOTE 7

4-3-79 NOTE 9 ADDED - CHGED 6
8-15-78 CHANGED NOTES 3 & 4
ADDED NOTE 8

2-4-76 CONTR'S NAME-ORANGE

EUREKA ENERGY

SUPERSEDES

REVISIONS

Date	Appr.
8-15-73	
2-4-76	
7-13-76	
8-15-78	
4-3-79	

CONSTRUCTION NOTIFICATION SIGNS

RECOMMENDED FOR APPROVAL:
PROJECT ENGINEER — Oct 5 1981 (Date)
ACCEPTED
EUREKA ENERGY — Oct 27 1981

STD. DWG. NO. 745-1B

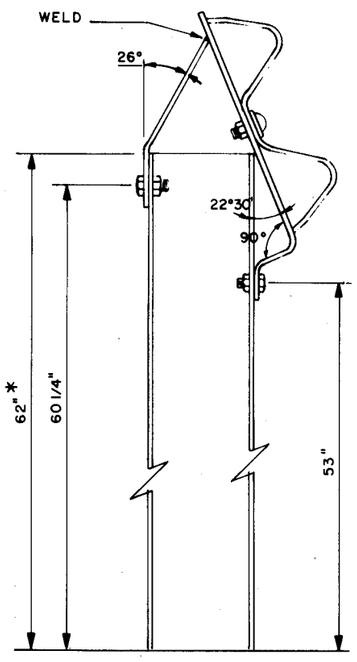

NO. 3

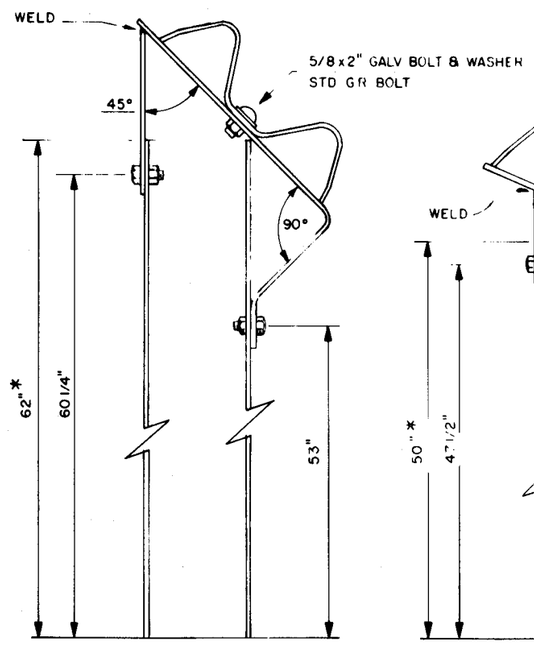

NO. 4

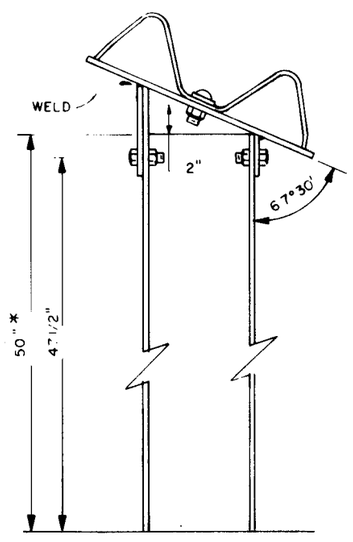

NO 5

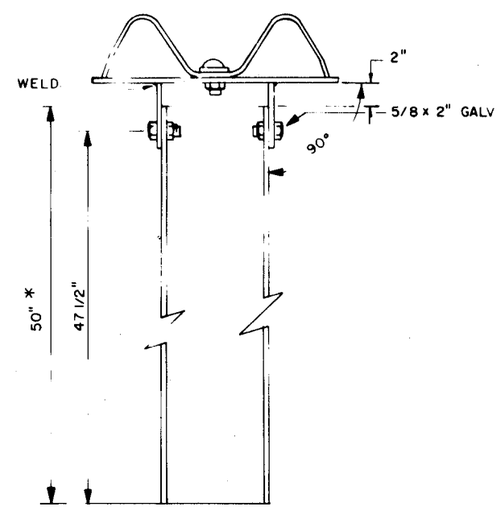

NO. 6

* SEE NOTE 3

1. FOR INSTALLATION DETAILS SEE STANDARD DWG 735-2.
2. THE BRACKET SHALL BE 7 1/2" x 1/4" AND SHALL HAVE A 1" OVERHANG ON EACH SIDE OF THE GUARDRAIL.
3. THESE ARE LENGTHS OF POSTS. DEPTH SHALL BE ADJUSTED TO PRODUCE A STRAIGHT LINE AT THE CENTER OF RAIL

1·23·80 CHANGED NO. 5 – ADDED NOTE 3
11·15·79 2" DIM.-RENUMBERED POSTS

EUREKA ENERGY

SUPERSEDES	

REVISIONS	
Date	Appr.
11·15·79	
1·23·80	

TURN DOWN BRACKET FOR STEEL GUARDRAIL POSTS

RECOMMENDED FOR APPROVAL:
Ralph Watson — Oct 5, 1981
PROJECT ENGINEER — Date
ACCEPTED
Jerry A. Dani — Oct 5, 1981
EUREKA / ENERGY

STD. DWG. NO. 735-2A

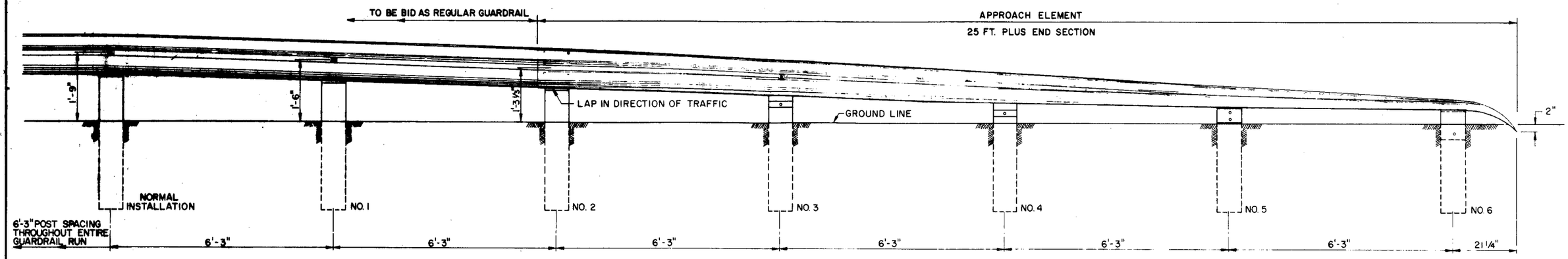

GUARDRAIL APPROACH ELEMENT
ELEVATION

POSTS 1 AND 2 SHALL BE FULL LENGTH
ADJUSTED TO PROPER HEIGHT

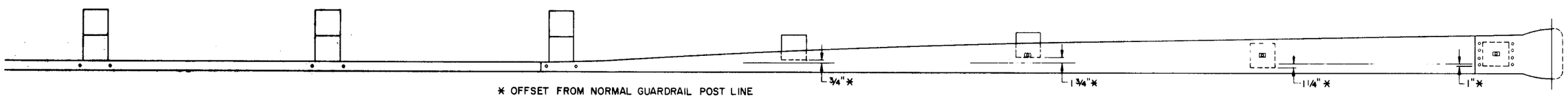

* OFFSET FROM NORMAL GUARDRAIL POST LINE

PLAN

··NOTES··

(1) THE APPROACH ELEMENT SHALL BE TWISTED TO HORIZONTAL AND SECURED TO THE POSTS, AS SHOWN, WITH THE END SECTION TIP BURIED.

(2) PLACE DELINEATOR POST ADJACENT TO THE BEGINNING OF THE APPROACH ELEMENT.

(3) THE APPROACH END ELEMENT SHALL BE TANGENT TO THE NORMAL GUARDRAIL LINE.

(4) FOR POST, RAIL AND TRAILING END ELEMENT DETAILS SEE STD. DWG. NO. 735-1. FOR GUARDRAIL INSTALLATION SEE STD. DWG NO. 735-3

(5) THE POST-RAIL BRACKET SHALL BE 7 1/2" WIDE AND HAVE A 1" OVERHANG ON EACH SIDE OF THE GUARDRAIL.

(6) THE ELEMENT SHALL BE INSTALLED ON THE APPROACH GUARD RAIL AND ON TRAILING END OF GUARD RAIL IN MEDIANS AND ON ALL GUARD RAIL ON TWO LANE ROADS.

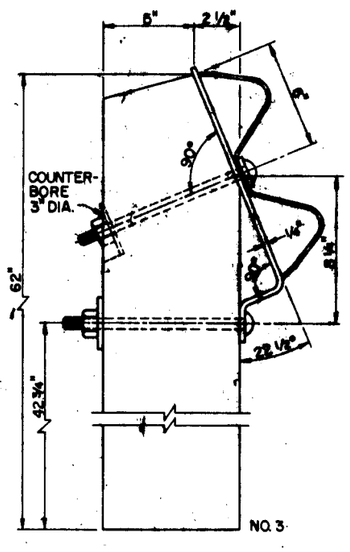

NO. 3

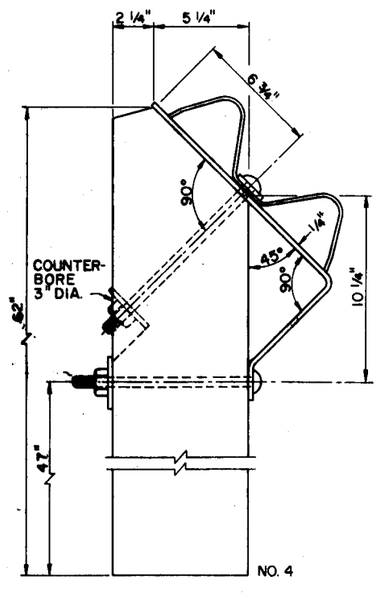

NO. 4

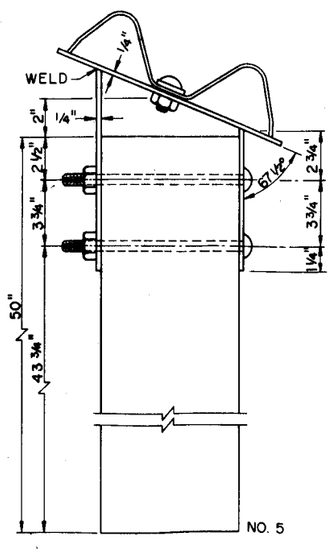

NO. 5

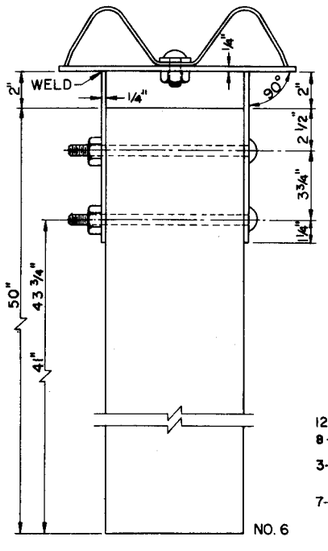

NO. 6

Date	Appr.
12-5-72	TOOK OFF STRIPING
8-8-72	CHANGED POST LENGTH
3-2-71	DIMENSIONED APPR. ELEMENT.
7-7-70	INDICATED LENGTH TO BE PAINTED.

8-1-67 RAISED GUARDRAIL & ADDED NOTE 6
2-7-67 LOWERED GUARDRAIL AND POSTS 1 AND 2

EUREKA ENERGY

SUPERSEDES

REVISIONS

Date	Appr.
2-7-67	
8-1-67	
7-7-70	
3-2-71	
8-8-72	
12-5-72	

GUARDRAIL APPROACH ELEMENT INSTALLATION

RECOMMENDED FOR APPROVAL:
Ralph E. Wilson
PROJECT ENGINEER
Oct. 5 1971
Date

ACCEPTED
Gary A. Dunn
EUREKA ENERGY
Oct 27 1971

STD. DWG. NO. 735-2

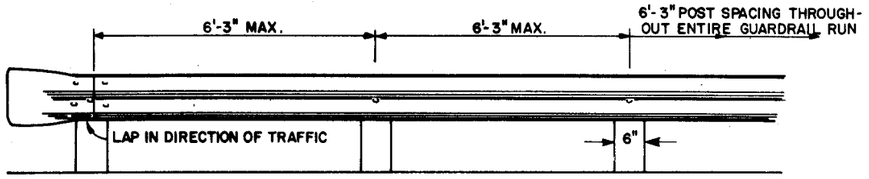

THE RAIL ELEMENTS SHALL BE SHOP CURVED TO FIT RADII FROM 20' TO 150'.
RAIL ELEMENT NOT TO EXCEED 26'-0 1/2".

TRAILING END ELEMENT

ALL POST SPACING 6'-3" MAX. THROUGHOUT RUN.
SEE STD. DWG 735-5 FOR STRUCT. APPROACH INSTALLATION.

GUARDRAIL PLACED ON WIDE FILLS SHALL BE 2' INSIDE SLOPE BREAK AND SHALL BE MEASURED FROM GROUNDLINE RATHER THAN TOP OF PAVEMENT SEE STD DWG 815-1

** ALL DIMENSIONS SHALL CONFORM TO REQUIREMENTS OF ASTM DES. A-568 AND SUBJECT TO MANUFACTURING TOLERANCE.

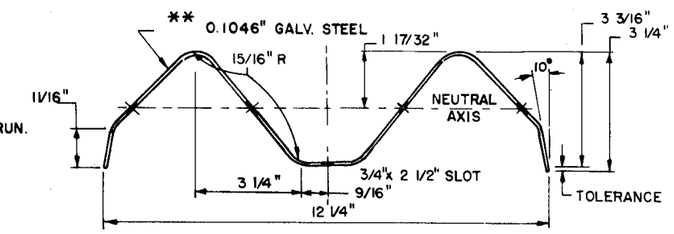

SECTION THRU RAIL ELEMENT

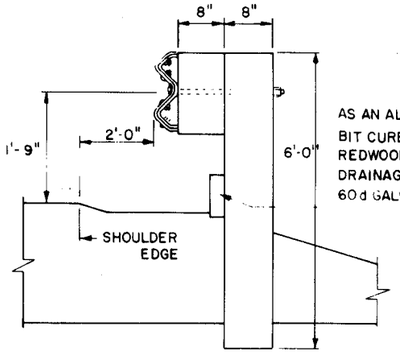

AS AN ALTERNATE TO BIT CURB USE A 2" x 6" REDWOOD PLANK IN DRAINAGE AREAS
60d GALV COM NAILS

WOOD POST AND BLOCK
(6'-3" MAX. POST SPACING)

POSTS AND BLOCKS SHALL BE TREATED WOOD IN ACCORDANCE W/ STD. SPECS.

DIMENSIONS: BLOCK - 6" x 8" x 13"
POST - 6" x 8" x 6'-0"
S 4 S OR ROUGH SAW

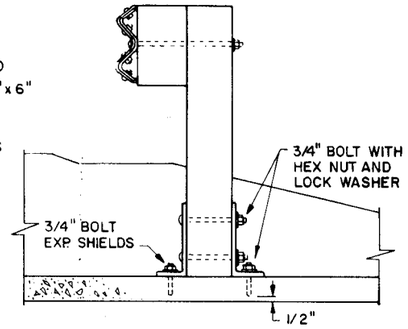

STRUCTURE MOUNTING BRACKET
(SEE BRACKET DETAIL BELOW)

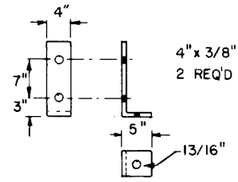

4" x 3/8" x 1'-5" GALV.
2 REQ'D PER POST

BRACKET DETAIL

(1) STEEL POSTS AND BLOCKS SHALL BE FABRICATED FROM MATERIAL CONFORMING TO AASHO M-183 (ASTM A-36) AND SHALL BE GALVANIZED AFTER FABRICATION IN ACCORDANCE WITH AASHO M-111 (ASTM A-123)

(2) EITHER STEEL POSTS AND BLOCKS OR WOOD POSTS AND BLOCKS MAY BE USED AT THE OPTION OF THE CONTRACTOR EXCEPT ONLY ONE TYPE OF POST AND BLOCK SHALL BE USED ON ANY ONE PROJECT.

(3) MANUFACTURED 3/4 x 035" ELECTRO GALV. TYPE I, CLASS B, GRADE II BAND IN ACCORDANCE WITH FED. SPEC. QQ S-781E. TIGHTEN TO DEPRESS POST CORNERS 1/8".

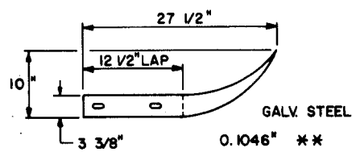

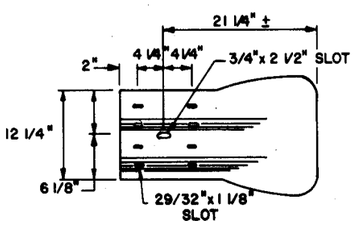

SINGLE GUARDRAIL

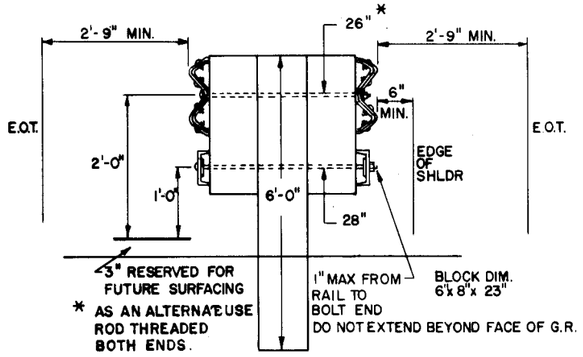

* AS AN ALTERNATE USE ROD THREADED BOTH ENDS.

DOUBLE RAIL INSTALLATION
(MEDIAN BARRIER)
FOR WIDTHS 8 FT. AND LESS THAN 16 FT.

DOUBLE GUARDRAIL EXTEND 6" EACH SIDE OF POST ℄

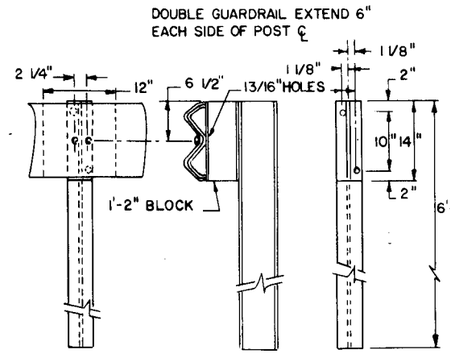

6 x 4 B 8.5 NO. 1 POST & BLOCK
ALL BOLTS 5/8" Ø WITH HEX NUT & LOCK WASHER (GALVANIZED)

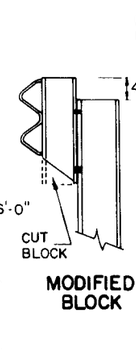

MODIFIED BLOCK

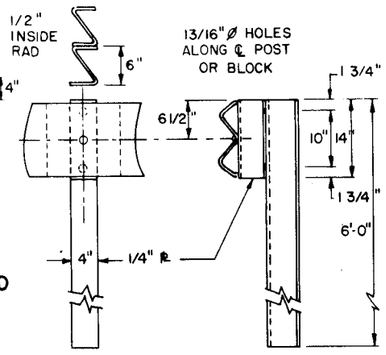

6" x 4" S SECTION POST & BLOCK
ALL BOLTS 5/8" Ø WITH HEX NUT & LOCK WASHER (GALVANIZED)

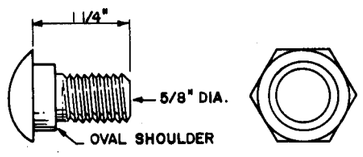

GALVANIZED SPLICE BOLT AND NUT

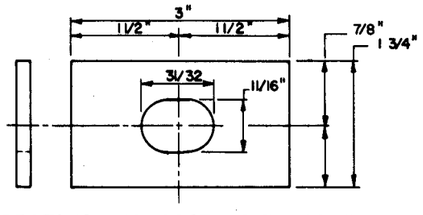

RECTANGULAR POST BOLT WASHER
(8 GAGE GALV.)

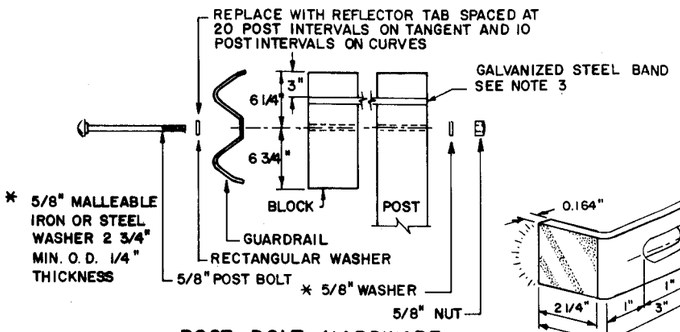

* 5/8" MALLEABLE IRON OR STEEL WASHER 2 3/4" MIN. O.D. 1/4" THICKNESS

POST BOLT HARDWARE
(GALVANIZED)

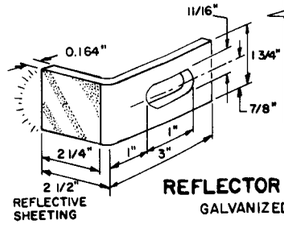

REFLECTOR TAB
GALVANIZED

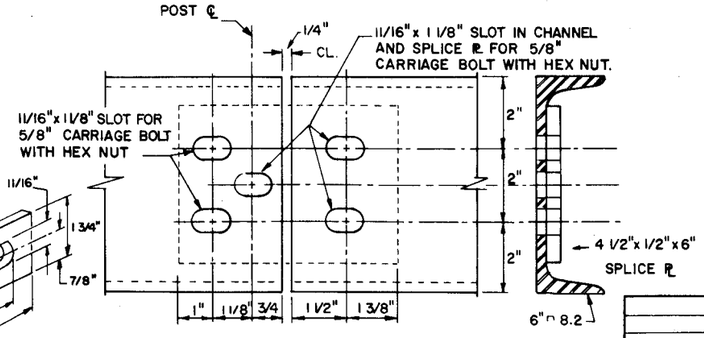

BOTTOM RAIL SPLICE
(RAIL SPLICES TO OCCUR AT POSTS ONLY)

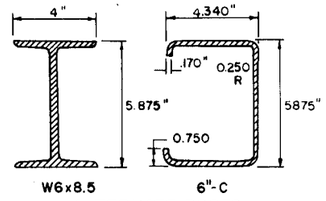

ALTERNATE POSTS

REDRAWN 6-26-81

EUREKA ENERGY

SUPERSEDES

REVISIONS

Date	Appr.

BEAM GUARD RAIL

RECOMMENDED FOR APPROVAL:
Ralph Watson — PROJECT ENGINEER — Oct 5 1981 (Date)
ACCEPTED
Gary A. Dami — EUREKA ENERGY — Oct 27 1981

STD. DWG. NO. 735-1

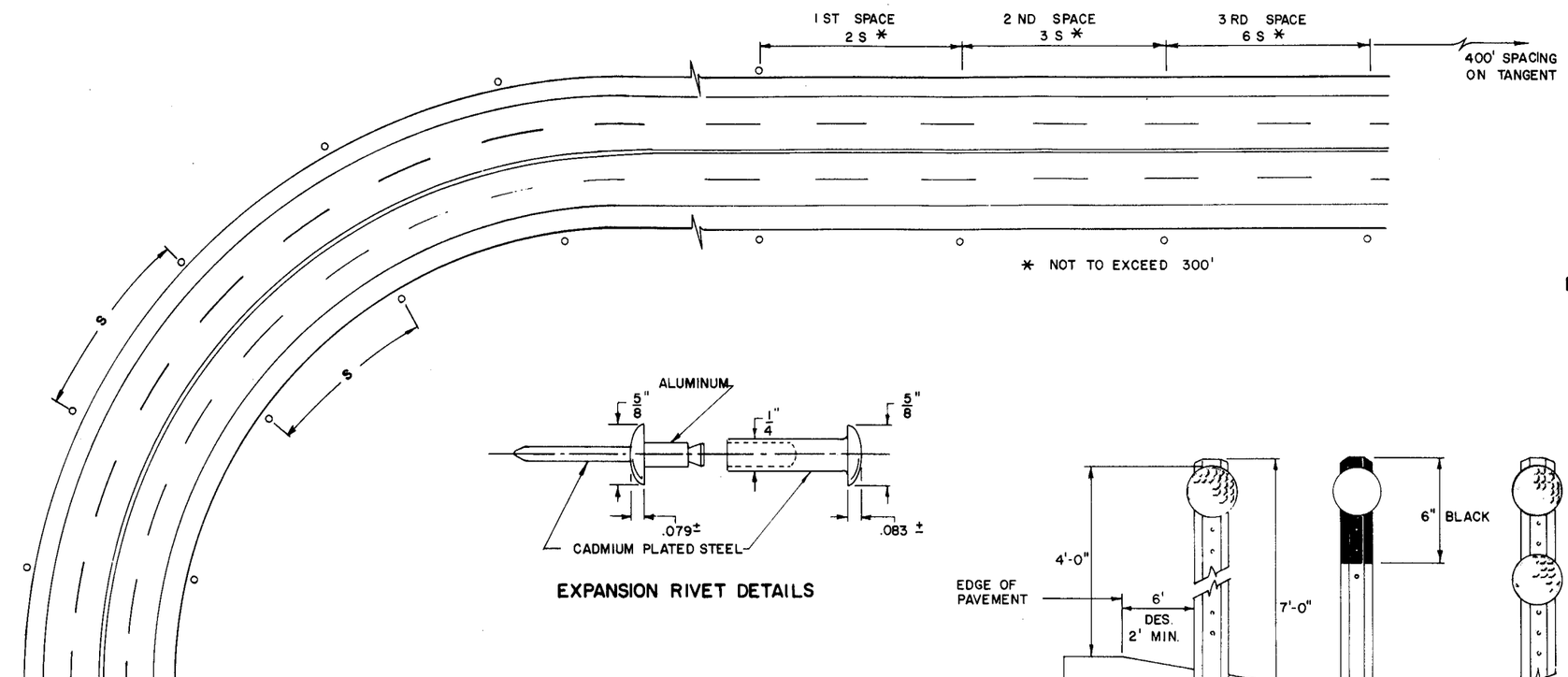

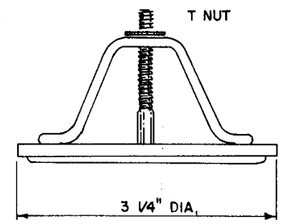

3/16"x 2 1/2" STAINLESS STEEL BOLT WITH ONE-WAY SLOT AND CADMIUM PLATED VANDAL RESISTANT NUT. THREADS SHALL BE DISTORTED AFTER INSTALLATION. EXPANSION RIVETS MAY BE USED AS A SUBSTITUTE FOR BOLTS - SEE DETAIL.

REFLECTOR ATTACHMENT WITH FLANGED CHANNEL POST

EXPANSION RIVET DETAILS

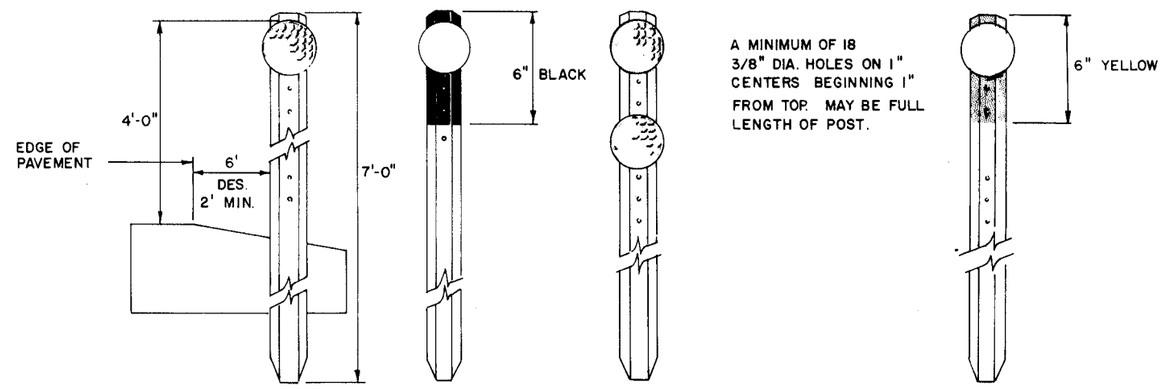

A MINIMUM OF 18 3/8" DIA. HOLES ON 1" CENTERS BEGINNING 1" FROM TOP. MAY BE FULL LENGTH OF POST.

TYPE I SINGLE UNIT (OF COLOR SPECIFIED)

CULVERT MARKER SEE NOTE 5

TYPE II DOUBLE UNIT (OF COLOR SPECIFIED)

NO PASSING SEE NOTE 8

POST SPACING				
DEGREE OF CURVE	SPACING ON CURVE (S)	SPACING IN ADV. & BEYOND CURVE		
		1st SPACE	2nd SPACE	3rd SPACE
0° 30'	240	300	300	300
1° 00'	220	300	300	300
1° 30'	200	300	300	300
2° 00'	185	300	300	300
2° 30'	165	300	300	300
3° 00'	150	300	300	300
3° 30'	135	270	300	300
4° 00'	125	260	300	300
4° 30'	110	220	300	300
5° 00'	105	210	300	300
5° 30'	105	210	300	300
6° 00'	100	200	300	300
6° 30'	100	200	300	300
7° 00'	95	190	285	300
7° 30'	95	190	285	300
8° 00'	90	180	270	300
8° 30'	90	180	270	300
9° 00'	85	170	255	300
9° 30'	80	160	240	300
10° 00'	75	150	225	300
11° 00'	70	140	210	300
12° 00'	65	130	195	300
13° 00'	60	120	180	300
14° 00'	60	120	180	300
15° 00'	55	110	145	300

DEGREES NOT SHOWN MAY BE INTERPOLATED FROM TABLE

1. THE COLOR OF DELINEATORS SHALL, IN ALL CASES, CONFORM TO THE COLOR OF EDGE LINES STIPULATED IN THE 1978 EDITION OF THE MANUAL ON UNIFORM TRAFFIC CONTROL DEVICES, SECTION 3B-6.
2. SPACING MAY BE REDUCED TO 200' IN HEAVY SNOW AREAS OR FOR SHORT TANGENT SECTIONS IN PREDOMINANTLY CURVILINEAR ALIGNMENT.
3. DELINEATOR POSTS SHALL BE SET 2' TO 6' FROM PAVEMENT EDGE AND SHALL MAINTAIN A STRAIGHT LINE ON TANGENT SECTIONS.
4. SPACING ON HORIZONTAL CURVES SHALL BE ACCORDING TO THE TABLE.
5. DELINEATORS SHALL BE LOCATED AT CULVERTS. THE TOP 6" OF THE POST SHALL BE PAINTED BLACK. THE CULVERT MARKER REFLECTOR BUTTON SHALL BE OF THE SAME COLOR AS THE DELINEATORS WITH WHICH IT IS ALIGNED.
6. WHERE DELINEATORS ARE MOUNTED ON BRIDGE RAIL OTHER THAN ALUMINUM THE MOUNTING BRACKET SHALL BE OF IDENTICAL METAL AS THE RAIL AND TREATED FOR CORROSION RESISTANCE. THE CENTER OF THE FIRST DELINEATOR SHALL BE 2 1/2" ABOVE THE RAIL.
7. FOR FREEWAY RAMP INSTALLATION SEE STANDARD DRAWING 726-1.
8. INSTALL AT BEGINNING AND END OF NO PASSING ZONE TO ASSIST CREWS IN ESTABLISHING PAINT LIMITS.

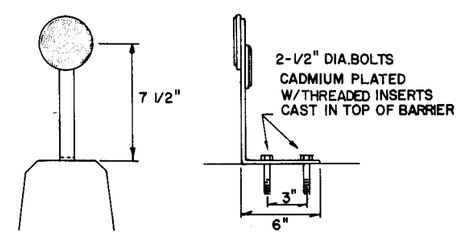

BRIDGE PARAPET OR MEDIAN BARRIER ATTACHMENT

10-14-80 ADDED NO PASSING DELINEATOR
5-8-80 POST SPACING (CHART) REDRAWN

EUREKA ENERGY

SUPERSEDES

REVISIONS

Date	Appr.
5-8-80	
10-14-80	

DELINEATION
OTHER THAN INTERSTATE

RECOMMENDED FOR APPROVAL: Ralph Wilkinson PROJECT ENGINEER — Oct 5 1981 Date

ACCEPTED: Gary A. Davis EUREKA ENERGY — Oct 27 1981

STD. DWG. NO. 726-2

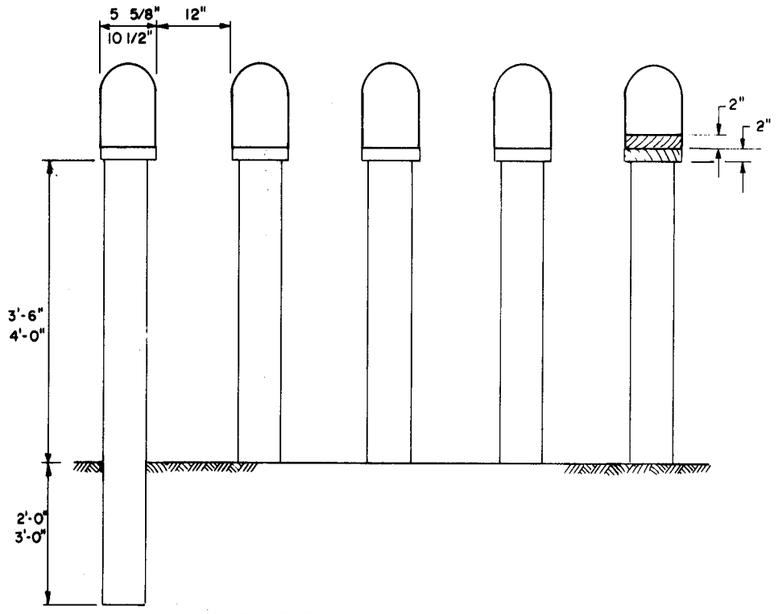

MULTIPLE MAILBOX ARRANGEMENT

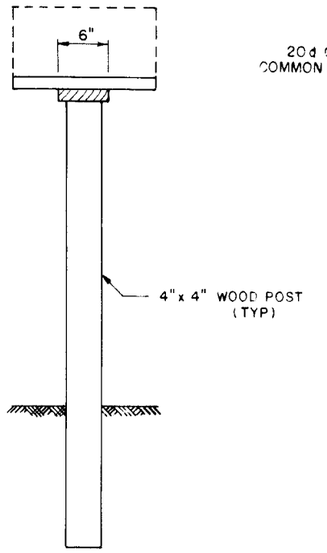

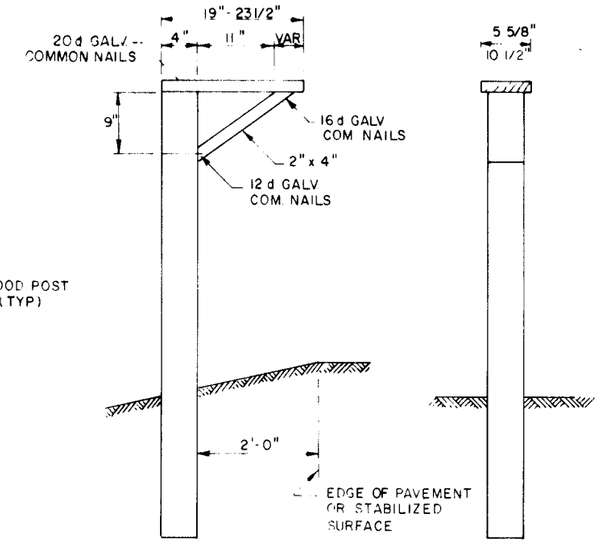

SINGLE MAILBOX SUPPORT

NOTES:

(1) FOR INFORMATION REGARDING MATERIAL, CONSTRUCTION AND TREATMENT OF POSTS, SEE STANDARD SPECIFICATIONS.

(2) RIGHT OF WAY MARKERS SHALL BE PLACED AT EACH ANGLE POINT IN A RIGHT OF WAY LINE WHERE THE RIGHT OF WAY PARALLELS THE CENTER LINE OF THE HIGHWAY AROUND A CURVE MARKERS SHALL BE PLACED ON EACH RIGHT OF WAY LINE OPPOSITE THE PS, SC, CS AND ST OR OPPOSITE THE PC AND PT.

(3) RIGHT OF WAY MARKERS SHALL BE PLACED IN ADDITION SO THAT NO INTERVAL WILL EXCEED 1,000 FEET. THESE INTERMEDIATE MARKERS SHOULD PREFERABLY BE ON SECTION LINES OR INTERSECTING PROPERTY LINES.

(4) ALL EXPOSED SURFACES OF THE BRONZE CAP ARE TO BE GROUND TO A SMOOTH SURFACE.

(5) ALL LETTERS ARE TO BE DEPRESSED A MINIMUM OF 1/16 INCH.

(6) 3/16 INCH LETTERS AND FIGURES SHALL BE USED.

(7) SET BRONZE CAP FLUSH WITH GROUND OR SURFACE WHEN SO DIRECTED BY THE ENGINEER AS INDICATED IN ALTERNATE 'A' INSTALLATION.

(8) USE ALTERNATE 'B' INSTALLATION WHEN PLACING MARKERS IN HEAVY BRUSH OR FOREST LANDS.

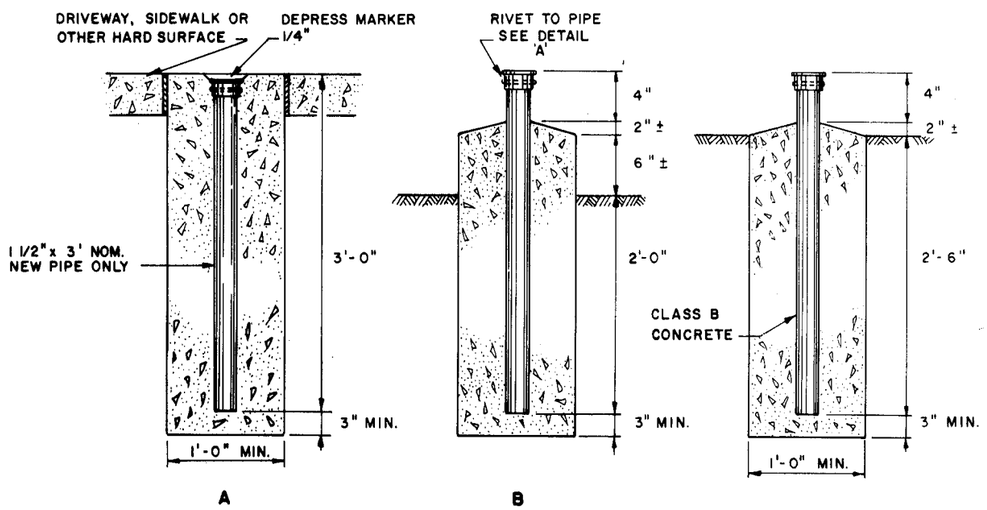

ALTERNATE INSTALLATIONS

STANDARD INSTALLATION

R/W MARKER ELEVATION INSTALLATION

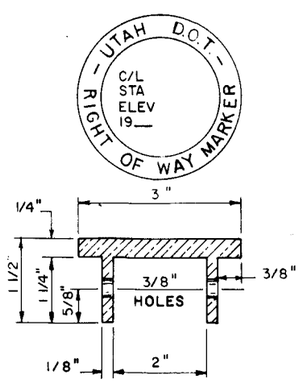

BRONZE CAP

DETAIL 'A'

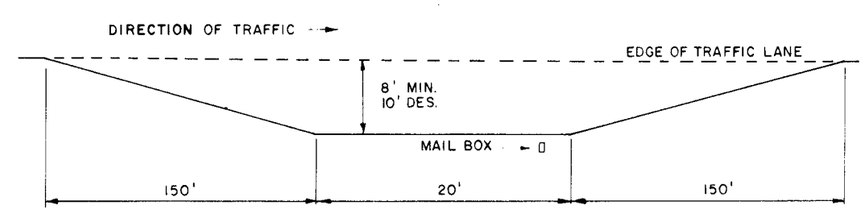

MAIL BOX TURN OUT

RECOMMENDED FOR 50 MPH ROADS & OVER WITH ADT OF 450

9-9-80 DELETED RAIL (MULTIPLE ARR.)
7-5-77 REDRAWN - ADDITIONAL DIM. & INSTAL. TO MARKER

EUREKA ENERGY

SUPERSEDES

REVISIONS

Date	Appr.
7-5-77	
9-9-80	

R/W MARKER & MAIL BOX POSTS

RECOMMENDED FOR APPROVAL:
PROJECT ENGINEER — Date: Oct 5, 81

ACCEPTED
EUREKA ENERGY — Oct 57, 81

STD. DWG. NO. 725-1

TABLE I

***PERMISSIBLE HEIGHT OF COVER (H) FOR REINFORCED CONCRETE PIPE (EMBANKMENT CONDITION)**

TYPE OF INSTALLATION	PIPE CLASS	BEDDING CLASS		
		CLASS C	CLASS B	CLASS A
POSITIVE PROJECTION	II	10'-0"	13'-0"	22'-0"
	III	14'-0"	17'-0"	27'-0"
	IV	21'-0"	26'-0"	40'-0"
	V	27'-0"	33'-0"	50'-0"
ZERO PROJECTION	III	18'-0"	21'-0"	33'-0"
	IV	28'-0"	33'-0"	49'-0"
	V	34'-0"	41'-0"	60'-0"
CUSHION TRENCH		CLASS C_1	CLASS B_1	
	III	28'-0"	35'-0"	
	IV	45'-0"	54'-0"	
	V	57'-0"	69'-0"	

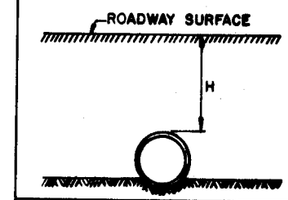

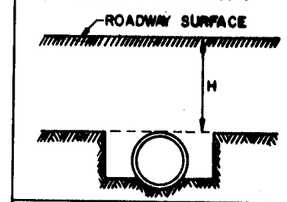

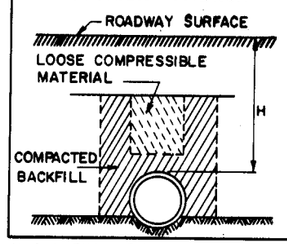

* ALL FILL HEIGHTS BASED ON ULTIMATE D - STRENGTH AND A 1.33 SAFETY FACTOR.

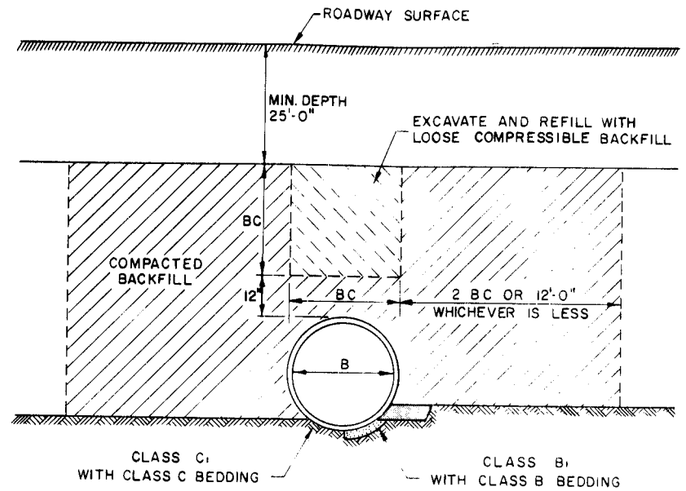

NOTES

(1) THE DESIGN TABLE COVERS INSTALLATIONS UNDER EMBANKMENT CONDITIONS AND WILL ORDINARILY BE ADEQUATE FOR TRENCH CONDITIONS. SPECIAL DESIGN SHOULD BE UTILIZED FOR UNUSUAL TRENCH INSTALLATIONS.

(2) THIS STANDARD COVERS REINFORCED CIRCULAR CONCRETE PIPE FROM 12" TO 108" INTERNAL DIAMETER WHICH SHALL BE AVAILABLE IN MULTIPLES OF 3" FROM 12" TO 18" AND IN 6" MULTIPLES FROM 18" TO 108".

(3) STRENGTH REQUIREMENTS SHALL BE IN ACCORDANCE WITH STANDARD SPECIFICATIONS CLASS II SHALL BE THE MINIMUM STRENGTH PERMITTED, AND ALL PIPE CALLED FOR IN THE PLANS OR PROPOSAL WITHOUT CLASS DESIGNATION SHALL BE DETERMINED BY HEIGHT OF COVER (H) SELECTED ACCORDING TO TABLE I.

(4) THE MAXIMUM PERMISSIBLE FILL HEIGHT, MEASURED FROM TOP OF PIPE TO ROADWAY SURFACE, IS OBTAINED FROM THE DESIGN TABLE FOR EACH COMBINATION OF PIPE CLASS AND BEDDING CLASS.

(5) THE MINIMUM HEIGHT OF FILL BETWEEN THE TOP OF CULVERT AND ROADWAY FINISHED GRADE SHALL BE 1.0 FT. WITH A CUSHION TRENCH INSTALLATION THE MINIMUM FILL ABOVE THE COMPRESSIBLE MATERIAL SHALL BE 25 FT.

(6) WHERE MULTIPLE LINES OF PIPE ARE USED THE ADJACENT SIDES SHALL BE AT LEAST ONE HALF THE INSIDE PIPE DIAMETER APART, TO A MAXIMUM OF 3 FT.

(7) SELECT BEDDING CLASS FROM TABLE I FOR EACH COMBINATION OF PIPE CLASS & HEIGHT OF COVER (H)

(8) CLASS A BEDDING SHALL PROVIDE A CONCRETE CRADLE OF 2000 LBS. CONCRETE OR BETTER, CONSTRUCTED MONOLITHICALLY WITHOUT HORIZONTAL CONSTRUCTION JOINTS. THE PIPE SHALL BE TEMPORARILY SUPPORTED TO LINE AND GRADE WITH APPROVED CRADLES AND THE CONCRETE POURED BENEATH THE PIPE TO INSURE UNIFORM BEARING.

(9) CLASS B BEDDING SHALL PROVIDE AN ACCURATELY SHAPED SAND OR FINE GRANULAR MATERIAL BEDDING OVER AN EARTH FOUNDATION WITH COMPACTABLE SOIL TAMPED UNDER THE HAUNCHES IN LAYERS NOT EXCEEDING 6".

(10) CLASS C BEDDING SHALL PLACE THE PIPE IN A SOIL FOUNDATION SHAPED TO FIT THE LOWER PORTION OF THE PIPE WITH SOIL MATERIAL PLACED BY HAND AND TAMPED TO COMPLETELY FILL ALL SPACES UNDER AND ADJACENT TO THE PIPE.

(11) CLASS B_1 OR C_1 (CUSHION TRENCH) BEDDING SHALL BE IN ACCORDANCE WITH CLASS B OR C AND THE FILL COMPACTED OVER AND ADJACENT TO THE PIPE AS SHOWN IN THE DETAIL. A TRENCH SHALL BE EXCAVATED EQUAL IN WIDTH TO THE OUTSIDE PIPE DIAMETER DIRECTLY OVER THE PIPE AND TO AN ELEVATION ONE FOOT ABOVE THE TOP OF THE PIPE. THE TRENCH WALLS SHALL BE KEPT AS NEARLY VERTICAL AS POSSIBLE. THE TRENCH SHALL THEN BE FILLED WITH LOOSE, HIGHLY COMPRESSIBLE SOIL MATERIAL. SAWDUST OR OTHER ORGANIC MATERIAL MAY BE USED TO FILL THE LOWER 1/4 TO 1/3 OF THE TRENCH IN ORDER TO INSURE HIGH COMPRESSIBILITY. THE TRENCH AND LOOSE BACKFILL SHALL NOT BE CARRIED CLOSER THAN 10 FT. (HORIZONTAL MEASUREMENT) TO THE OUTSIDE SLOPE OF FILL. THE OUTSIDE 10 FEET SHALL BE COMPOSED OF IMPERVIOUS MATERIAL THOROUGHLY COMPACTED. AFTER THE LOOSE BACKFILL IS COMPLETED, THE FILL SHALL BE COMPLETED BY NORMAL METHODS.

(12) BEDDING ON ROCK FOUNDATION WHERE UNYIELDING FOUNDATION IS ENCOUNTERED, THE EXCAVATION SHALL BE LOWERED AND AN EARTH CUSHION OF FINE COMPRESSIBLE MATERIAL PROVIDED TO THE DIMENSIONS SHOWN ON THE TYPICAL DETAIL. THIS CUSHION IS IN ADDITION TO THE REQUIREMENTS FOR THE SPECIFIED CLASS OF BEDDING.

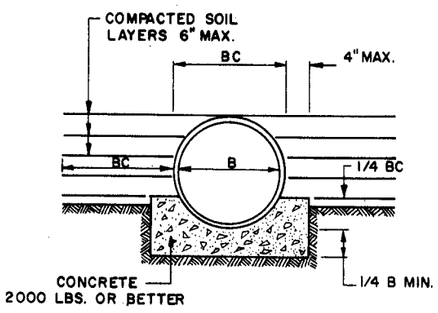

CLASS A BEDDING

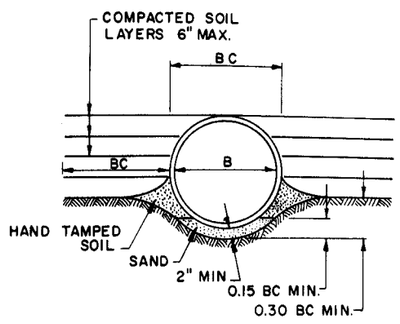

CLASS B BEDDING

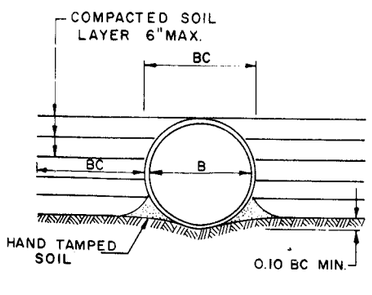

CLASS C BEDDING

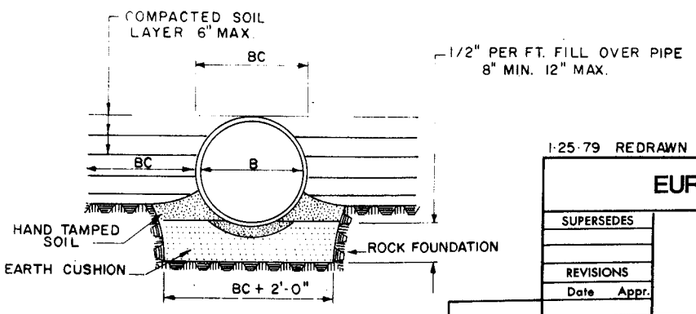

BEDDING ON ROCK FOUNDATION (CLASS C OR B MODIFIED)

1-25-79 REDRAWN NO REVISION

EUREKA ENERGY

SUPERSEDES

REVISIONS

Date	Appr.

REINFORCED CONCRETE CULVERTS

RECOMMENDED FOR APPROVAL: Ralph E. Watson, PROJECT ENGINEER — Date Oct 5, 1971

ACCEPTED: Gerry A. Davis, EUREKA ENERGY — Date Oct 27, 1971

STD. DWG. NO. 605-20

TABLE I

*** PERMISSIBLE HEIGHT OF COVER (H) FOR REINFORCED CONCRETE PIPE (EMBANKMENT CONDITION)**

TYPE OF INSTALLATION	PIPE CLASS	BEDDING CLASS		
		CLASS C	CLASS B	CLASS A
POSITIVE PROJECTION	II	10'-0"	13'-0"	22'-0"
	III	14'-0"	17'-0"	27'-0"
	IV	21'-0"	26'-0"	40'-0"
	V	27'-0"	33'-0"	50'-0"
ZERO PROJECTION	III	18'-0"	21'-0"	33'-0"
	IV	28'-0"	33'-0"	49'-0"
	V	34'-0"	41'-0"	60'-0"
CUSHION TRENCH		CLASS C_1	CLASS B_1	
	III	28'-0"	35'-0"	
	IV	45'-0"	54'-0"	
	V	57'-0"	69'-0"	

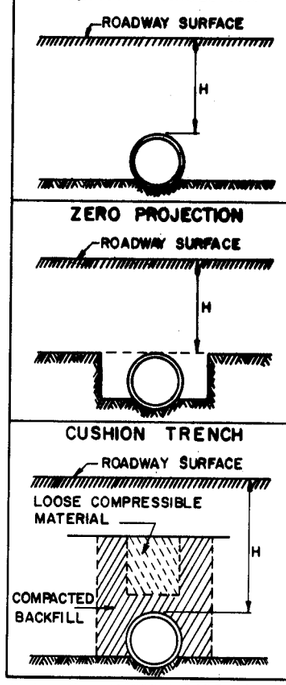

* ALL FILL HEIGHTS BASED ON ULTIMATE D - STRENGTH AND A 1.33 SAFETY FACTOR.

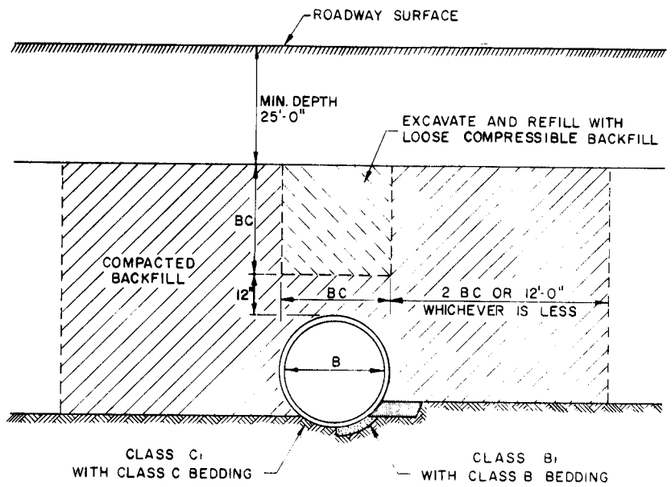

NOTES

(1) THE DESIGN TABLE COVERS INSTALLATIONS UNDER EMBANKMENT CONDITIONS AND WILL ORDINARILY BE ADEQUATE FOR TRENCH CONDITIONS. SPECIAL DESIGN SHOULD BE UTILIZED FOR UNUSUAL TRENCH INSTALLATIONS.

(2) THIS STANDARD COVERS REINFORCED CIRCULAR CONCRETE PIPE FROM 12" TO 108" INTERNAL DIAMETER WHICH SHALL BE AVAILABLE IN MULTIPLES OF 3" FROM 12" TO 18" AND IN 6" MULTIPLES FROM 18" TO 108".

(3) STRENGTH REQUIREMENTS SHALL BE IN ACCORDANCE WITH STANDARD SPECIFICATIONS CLASS II SHALL BE THE MINIMUM STRENGTH PERMITTED, AND ALL PIPE CALLED FOR IN THE PLANS OR PROPOSAL WITHOUT CLASS DESIGNATION SHALL BE DETERMINED BY HEIGHT OF COVER (H) SELECTED ACCORDING TO TABLE I.

(4) THE MAXIMUM PERMISSIBLE FILL HEIGHT, MEASURED FROM TOP OF PIPE TO ROADWAY SURFACE, IS OBTAINED FROM THE DESIGN TABLE FOR EACH COMBINATION OF PIPE CLASS AND BEDDING CLASS.

(5) THE MINIMUM HEIGHT OF FILL BETWEEN THE TOP OF CULVERT AND ROADWAY FINISHED GRADE SHALL BE 1.0 FT. WITH A CUSHION TRENCH INSTALLATION THE MINIMUM FILL ABOVE THE COMPRESSIBLE MATERIAL SHALL BE 25 FT.

(6) WHERE MULTIPLE LINES OF PIPE ARE USED THE ADJACENT SIDES SHALL BE AT LEAST ONE HALF THE INSIDE PIPE DIAMETER APART, TO A MAXIMUM OF 3 FT.

(7) SELECT BEDDING CLASS FROM TABLE I FOR EACH COMBINATION OF PIPE CLASS & HEIGHT OF COVER (H)

(8) CLASS A BEDDING SHALL PROVIDE A CONCRETE CRADLE OF 2000 LBS. CONCRETE OR BETTER, CONSTRUCTED MONOLITHICALLY WITHOUT HORIZONTAL CONSTRUCTION JOINTS. THE PIPE SHALL BE TEMPORARILY SUPPORTED TO LINE AND GRADE WITH APPROVED CRADLES AND THE CONCRETE POURED BENEATH THE PIPE TO INSURE UNIFORM BEARING.

(9) CLASS B BEDDING SHALL PROVIDE AN ACCURATELY SHAPED SAND OR FINE GRANULAR MATERIAL BEDDING OVER AN EARTH FOUNDATION WITH COMPACTABLE SOIL TAMPED UNDER THE HAUNCHES IN LAYERS NOT EXCEEDING 6".

(10) CLASS C BEDDING SHALL PLACE THE PIPE IN A SOIL FOUNDATION SHAPED TO FIT THE LOWER PORTION OF THE PIPE WITH SOIL MATERIAL PLACED BY HAND AND TAMPED TO COMPLETELY FILL ALL SPACES UNDER AND ADJACENT TO THE PIPE.

(11) CLASS B_1 OR C_1 (CUSHION TRENCH) BEDDING SHALL BE IN ACCORDANCE WITH CLASS B OR C AND THE FILL COMPACTED OVER AND ADJACENT TO THE PIPE AS SHOWN IN THE DETAIL. A TRENCH SHALL BE EXCAVATED EQUAL IN WIDTH TO THE OUTSIDE PIPE DIAMETER DIRECTLY OVER THE PIPE AND TO AN ELEVATION ONE FOOT ABOVE THE TOP OF THE PIPE. THE TRENCH WALLS SHALL BE KEPT AS NEARLY VERTICAL AS POSSIBLE. THE TRENCH SHALL THEN BE FILLED WITH LOOSE, HIGHLY COMPRESSIBLE SOIL MATERIAL. SAWDUST OR OTHER ORGANIC MATERIAL MAY BE USED TO FILL THE LOWER 1/4 TO 1/3 OF THE TRENCH IN ORDER TO INSURE HIGH COMPRESSIBILITY. THE TRENCH AND LOOSE BACKFILL SHALL NOT BE CARRIED CLOSER THAN 10 FT. (HORIZONTAL MEASUREMENT) TO THE OUTSIDE SLOPE OF FILL. THE OUTSIDE 10 FEET SHALL BE COMPOSED OF IMPERVIOUS MATERIAL THOROUGHLY COMPACTED. AFTER THE LOOSE BACKFILL IS COMPLETED, THE FILL SHALL BE COMPLETED BY NORMAL METHODS.

(12) BEDDING ON ROCK FOUNDATION WHERE UNYIELDING FOUNDATION IS ENCOUNTERED, THE EXCAVATION SHALL BE LOWERED AND AN EARTH CUSHION OF FINE COMPRESSIBLE MATERIAL PROVIDED TO THE DIMENSIONS SHOWN ON THE TYPICAL DETAIL. THIS CUSHION IS IN ADDITION TO THE REQUIREMENTS FOR THE SPECIFIED CLASS OF BEDDING.

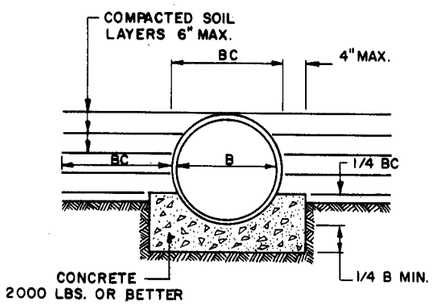

CLASS A BEDDING

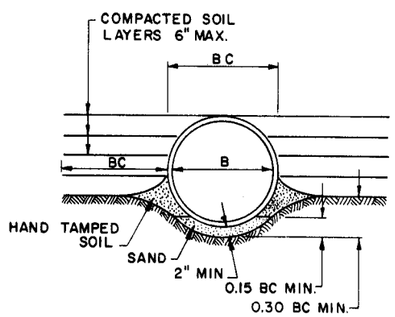

CLASS B BEDDING

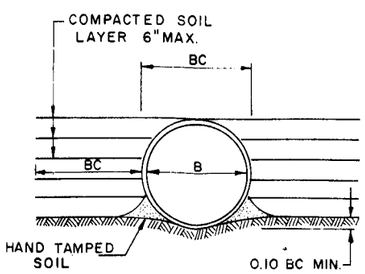

CLASS C BEDDING

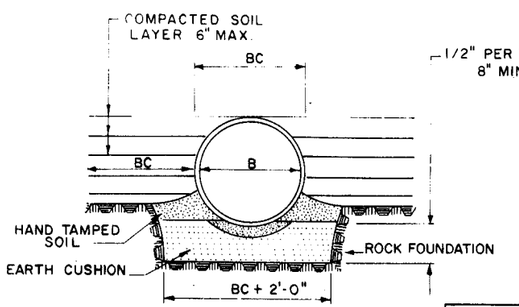

BEDDING ON ROCK FOUNDATION (CLASS C OR B MODIFIED)

1-25-79 REDRAWN NO REVISION

EUREKA ENERGY

SUPERSEDES

REVISIONS

Date	Appr.

REINFORCED CONCRETE CULVERTS

RECOMMENDED FOR APPROVAL:
Ralph E. Watson — Oct 5 1981
PROJECT ENGINEER — Date
ACCEPTED
Gerry A. Davis — Oct 27 1981
EUREKA ENERGY

STD. DWG. NO. 605-20

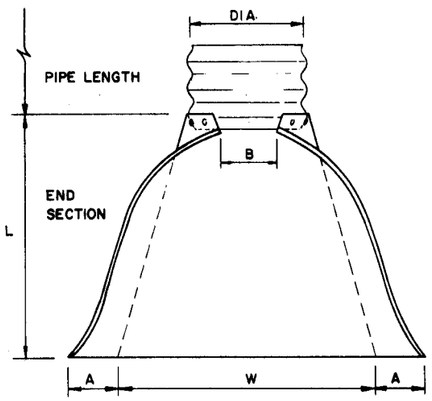

PLAN

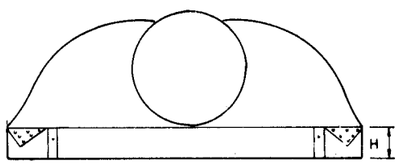

ELEVATION

PIPE DIA.	WT.	GAGE	END SECTION DIMENSIONS					
			A	B	H	L	W	TOE PLATE
12"	29#	16	4 3/4"	6"	6"	21"	24"	34"
15	39	16	6	8	6	26	30	40
18	52	16	7	9	6	31	36	46
21	63	16	8 1/4"	11	6	36	42	52
24	90	16	9 1/2"	12	6	42	48	58
30	145	14	12	15	7 1/2"	52 1/2"	60	70
36	274	14	14	18	9	63	72	85
42	417	12	16	21	10 1/2"	73 1/2"	84	103
48	502	12	18	27	12	78	90	114
54	630	12	18	30	12	84	102	130
60	826	12	18	33	12	87	114	146
66	914	12	18	36	12	87	120	162
72	998	12	18	39	12	87	126	178
78	1108	12	18	42	12	87	132	194
84	1200	12	18	45	12	87	138	210
TOLERANCE			1"	MAX.	1"	1 1/2"	2"	

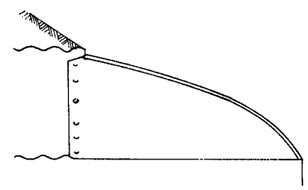

TYPICAL SECTION

CORRUGATED METAL PIPE (ROUND)

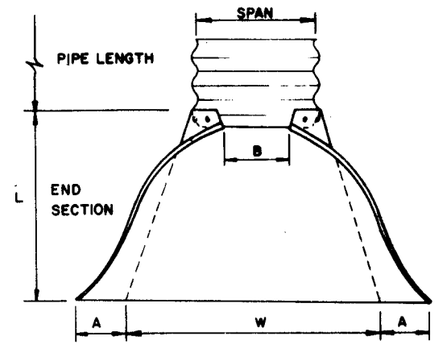

PLAN

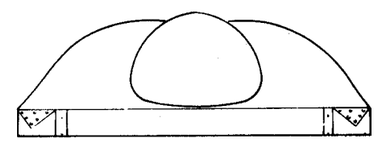

ELEVATION

SPAN	RISE	NOM DIA	WT.	GAGE	END SECTION DIMENSIONS					
					A	B	H	L	W	TOE PLATE
17	13	15"	32#	16	4 1/2"	9"	6"	19"	30"	40"
21	15	18	41	16	5 1/4	10	6	23	36	46
24	18	21	53	16	6 1/4	11 1/2	6	28	42	52
28	20	24	75	16	7	14	6	31 1/2	48	58
35	24	30	104	14	8 3/4	16	6	38 1/2	60	70
42	29	36	187	14	10 3/4	17 1/2	7 5/8	47	75	85
49	33	42	265	12	12 1/4	20	9 1/8	54	85	103
57	38	48	361	12	18	26	12	63	90	114
64	43	54	520	12	18	30	12	70	102	130
71	47	60	790	12	18	33	12	77	114	146
77	52	66	818	12	18	36	12	77	126	162
83	57	72	887	12	18	39	12	77	138	178
TOLERANCE					1"	MAX.	1"	1 1/2"	2"	

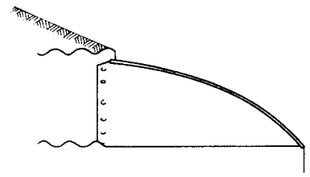

TYPICAL SECTION

CORRUGATED METAL PIPE ARCHES

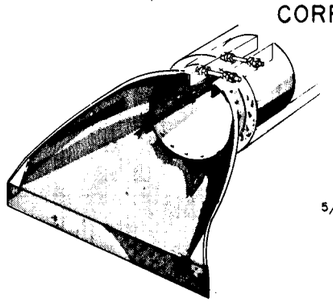

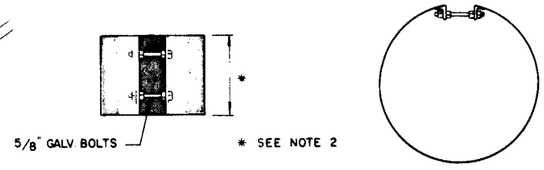

METAL INSERT

FOR CONNECTING CONCRETE PIPE TO METAL END SECTION

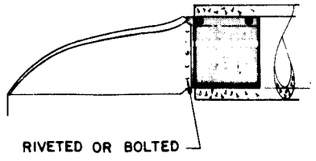

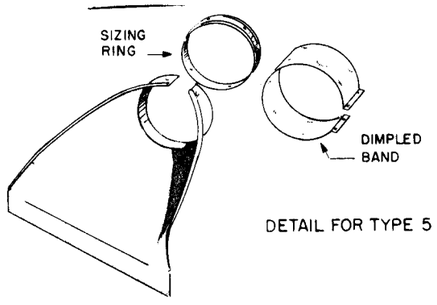

DETAIL FOR TYPE 5

NOTES

1. METAL CULVERT END SECTIONS SHALL MEET THE STANDARD SPECIFICATIONS.
2. METAL INSERTS SHALL BE USED TO CONNECT METAL END SECTIONS TO CONCRETE PIPES. FOR CONCRETE PIPE SIZES TO & INCLUDING 60" DIA. THE LENGTH OF THE INSERT SHALL BE 12" USING 2 BOLTS. FOR SIZES OVER 60" DIA. INSERT SHALL BE 18" & REQUIRES 3 BOLTS. THREE NUTS PER BOLT.
3. INSERT, BOLTS, WASHERS & RIVETS SHALL BE GALVANIZED.
4. GAGE OF INSERT SHALL BE THE SAME AS END SECTION.

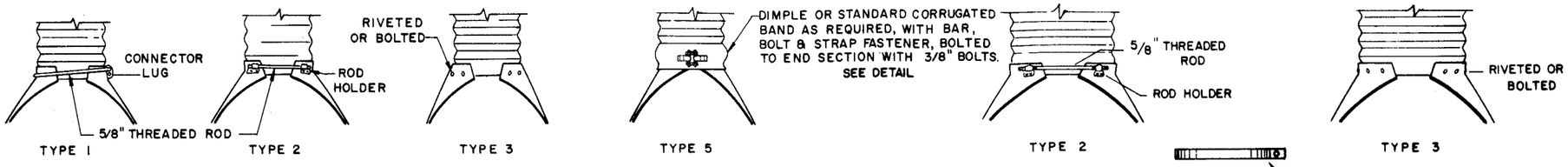

METHODS OF ATTACHING END SECTION TO PIPE

9-6-77	ADDED ALTERNATE BAND
5-7-74	ADDED DETAIL FOR TYPE 5 & CHANGED CHART
6-1-71	TOOK OFF TOE PLATE EXTENSION.
2-20-71	CHANGED NOTE RE: TOE PLATE EXT.
1-6-70	ADDED METAL INSERT

EUREKA ENERGY

SUPERSEDES

REVISIONS

Date	Appr.
1-6-70	
2-20-71	
6-1-71	
5-7-74	
9-6-77	

METAL CULVERT END SECTIONS

RECOMMENDED FOR APPROVAL: Ralph E. Watson, PROJECT ENGINEER — Date Oct. 5, 1971

ACCEPTED: Gary A. Dorr, EUREKA ENERGY — Date Oct. 27, 1971

STD. DWG. NO. 605-2

ROUND CORRUGATED STEEL PIPE

2 2/3" X 1/2" CORRUGATIONS

RIVETED, SPOT WELDED OR HELICAL LOCK SEAM FABRICATION

DIAMETER OR SPAN IN	MIN. COVER IN	MAXIMUM FILL HEIGHT (FT.) THICKNESS				
		0.064	0.079	0.109	0.138	0.168
12	12	84	91			
15	12	67	72			
18	12	55	60			
21	12	47	52	66		
24	12	41	45	58		
30	18	33	36	46		
36	18	27	30	39	40	
42	18	30	42	46	48	49
48	18	26	37	44	45	46
54	18		33	43	44	45
60	18			42	43	44
66	18			42	42	43
72	18				40	42
78	18					39
84	18					39

FOR 15"-36" DIAMETER & SPAN 18"-43" USE 4 1/2 RIVETS/FOOT.
FOR 42"-84" DIAMETER & SPAN 50"-85" USE 9 RIVETS/FOOT.

CORRUGATED STEEL PIPE ARCHES

2 2/3" X 1/2" CORRUGATIONS

RIVETED, WELDED OR HELICAL FABRICATION

PIPE DIM. SPAN-RISE INCHES	CORNER RADIUS INCHES	MIN. COVER INCHES	MIN. THICKNESS INCHES	MAX. FILL HEIGHT FEET
17 X 13	3	18	0.064	16
21 X 15	3	18	0.064	15
24 X 18	3	18	0.064	13
28 X 20	3	18	0.060	12
35 X 24	3	18	0.064	12
42 X 29	3 1/2	18	0.064	10
49 X 33	4	18	0.079	10
57 X 38	5	18	0.109	10
64 X 43	6	18	0.109	10
71 X 47	7	18	0.138	10
77 X 52	8	18	0.168	10
83 X 57	9	18	0.168	10

FOR 0.064 THICKNESS & 0.079 USE 5/16" DIAMETER RIVETS.
FOR 0.109, 0.138 & 0.168 THICKNESS USE 3/8" DIA. RIVETS.

FOR 12" THRU 36" DIA. & SPAN 18"- 43" USE 4 1/2 RIVETS / FT.

FOR 42" THRU 72" DIA. & SPAN 50"- 72" USE 9 RIVETS / FT.

FOR 0.060 & 0.075 THICKNESS USE 5/16" DIA. RIVETS.

FOR 0.105, 0.135 & 0.164 USE 3/8" DIA. RIVETS.

THE ABOVE SPECIFICATIONS ARE FOR "ROUND CORRUGATED ALUMINUM PIPE" AND "CORRUGATED ALUMINUM PIPE ARCHES."

ROUND CORRUGATED ALUMINUM STRUCTURAL PL. PIPE

9" X 2 1/2" CORRUGATIONS

BOLTED FABRICATION

PIPE DIAMETER INCHES	MIN. COVER INCHES	MAXIMUM FILL HEIGHT (FT.) THICKNESS						
		5 1/3"- 3/4" Ø ALUM. BOLTS / FT.			5 1/3" 3/4" Ø STEEL BLTS/FT.			
		0.100	0.125	0.152	0.175	0.200	0.225	0.250
60	18	26	34	44	48	52	56	60
66	18	23	31	38	42	44	47	50
72	18	20	27	34	41	46	51	56
84	18	19	25	32	38	43	47	51
96	18	17	22	28	33	38	41	45
108	24	15	19	25	29	33	37	40
120	24	13	17	22	26	30	33	36
132	24	12	16	20	24	27	30	33
144	24		14	18	22	25	28	30
156	24		13	17	20	23	25	28
168	24			16	19	21	24	26
180	24				18	20	22	24

ALUMINUM STRUCTURAL PLATE PIPE NOT ACCEPTABLE IF PAVED INVERT REQUIRED.

ROUND CORRUGATED STEEL PIPE

5"x 1" & 3"x 1" CORRUGATIONS

RIVETED, SPOT WELDED OR HELICAL LOCK SEAM FABRICATION

DIAMETER OR SPAN INCHES	MIN. COVER INCHES	MAXIMUM FILL HEIGHT (FT.) THICKNESS				
		0.064	0.079	0.109	0.138	0.168
36	18	48	60	79	91	103
42	18	41	51	65	72	80
48	18	36	45	57	62	67
54	18	32	40	52	56	59
60	18	29	36	49	52	54
66	18	26	32	47	49	51
72	18	24	30	44	47	49
78	18	22	28	41	46	47
84	18	21	26	38	45	46
90	18	19	25	35	42	45
96	18	18	22	33	40	44
102	24	17	21	31	37	42
108	24		20	29	35	39
114	24		19	28	33	37
120	24			26	32	35

CORRUGATED STEEL PIPE ARCHES

5"x 1" & 3"x 1" CORRUGATIONS

RIVETED, WELDED OR HELICAL FABRICATION

PIPE DIM. SPAN-RISE INCHES	CORNER RADIUS INCHES	MIN. COVER INCHES	MIN. THICKNESS INCHES	MAX. FILL HEIGHT FEET
43 X 27	5	18	0.064	12
50 X 31	6	18	0.064	12
58 X 36	7	18	0.064	12
65 X 40	8	18	0.064	12
72 X 44	9	18	0.064	12
73 X 55	12	18	0.064	16
81 X 59	14	18	0.079	15
87 X 63	14	18	0.079	14
95 X 67	16	18	0.109	13
103 X 71	16	24	0.109	12
112 X 75	18	24	0.109	11
117 X 79	18	24	0.109	10
128 X 83	18	24	0.138	9

USE 8 RIVETS/FOOT FOR ALL DIAMETERS
FOR 0.064 & 0.079 THICKNESS USE 3/8" DIAMETER RIVETS.
FOR 0.109, 0.138 & 0.168 THICKNESS USE 7/16" DIAMETER RIVETS.

ROUND CORRUGATED STEEL STRUCTURAL PLATE PIPE

6" X 2" CORRUGATIONS

BOLTED FABRICATION 4-3/4" Ø BOLTS / FOOT

PIPE DIAMETER INCHES	MIN COVER INCHES	MAXIMUM FILL HEIGHT (FT.) THICKNESS						
		0.109	0.138	0.168	0.188	0.218	0.249	0.280
60	18	42	62	81	93	108*	119	129
66	18	38	56	73	84	91	99	107
72	18	35	51	67	74	80	86	92
78	18	32	47	62	67	71	76	81
84	18	30	44	57	61	65	69	73
90	18	28	41	54	58	61	64	67
96	18	26	38	50	55	57	60	62
102	30	24	36	47	52	54	56	59
108	30	23	34	45	50	52	54	56
114	30	22	32	42	48	50	52	53
120	30	21	31	40	46	49	50	52
126	30	20	29	38	44	48	49	50
132	30	19	28	36	42	47	48	49
144	30	17	25	33	38	45	46	47
156	30	16	23	31	35	43	45	46
168	30	15	22	28	33	40	44	45
180	30	14	20	27	31	37	43	44
192	30		19	25	29	35	41	43
204	36		18	23	27	32	38	42
216	30		17	22	25	31	36	40
228	36			21	24	29	34	37
240	30			20	23	28	33	36
252	36				22	26	31	34

* FILL HEIGHTS OVER 100' USED ONLY AFTER THOROUGH INVESTIGATION OF FOUNDATION MATERIAL

ROUND CORRUGATED ALUMINUM PIPE

2 2/3" X 1/2" CORRUGATIONS

RIVETED, WELDED OR HELICAL FABRICATION

PIPE	MIN.	MAXIMUM FILL HEIGHT (FT) THICKNESS				
		0.060	0.075	0.105	0.135	0.164
12	12	45	48	79		
15	12	30	36	60		
18	12	25	30	43		
21	12	21	25	35	30	
24	12	18	22	30	33	
30	18	15	18	25	27	28
36	18	12	15	23	24	25
42	18		21	22	22	23
48	18				22	22
54	18				21	21
60	18				17	21
66	18				12	16
72	18					12

CORRUGATED ALUMINUM PIPE ARCHES

9" X 2 1/2" CORRUGATIONS

BOLTED FABRICATION *

PIPE DIMENSION SPAN-PISE FEET	CORNER RADIUS INCHES	MIN COVER INCHES	MIN. THICKNESS INCHES	MAX. FILL HEIGHT FEET
5-11 X 5-4	28.8	18	0.100	16
6-8 X 5-7	28.8	18	0.100	16
7-4 X 5-11	28.8	18	0.100	15
8-0 X 6-2	28.8	18	0.100	14
8-7 X 6-6	28.8	24	0.100	13
9-0 X 6-8	28.8	24	0.100	12
9-4 X 6-10	28.8	24	0.100	13
10-10 X 7-1	28.8	24	0.100	13
10-5 X 7-3	28.8	24	0.100	12
11-2 X 7-6	28.8	24	0.125	15
11-8 X 7-10	28.8	24	0.125	14
12-2 X 8-0	28.8	24	0.125	13
12-10 X 8-3	28.8	24	0.125	13
13-7 X 8-7	28.8	24	0.150	12
14-3 X 8-10	28.8	24	0.150	11
14-9 X 9-2	28.2	24	0.175	10
15-3 X 9-4	28.8	24	0.175	10
16-0 X 9-7	28.8	36	0.200	10
16-8 X 9-11	28.8	36	0.225	10
16-11 X 10-1	28.8	36	0.250	9

* THICKNESS TO 0.175 USE 5 1/3 - 3/4 Ø ALUM. BOLTS/FOOT
THICKNESS TO 0.200 & OVER USE 5 1/3 - 3/4 Ø STEEL BOLTS/FOOT

CORRUGATED STEEL PIPE ARCHES

6" X 2" CORRUGATIONS

BOLTED FABRICATION 4-3/4" Ø BOLTS / FOOT *

PIPE DIMENSION SPAN RISE FEET	CORNER RADIUS INCHES	MIN COVER INCHES	MIN. THICKNESS INCHES	MAX. FILL HEIGHT FEET
6-1 X 4-7	18	18	0.109	15
7-0 X 5-1	18	18	0.109	15
7-11 X 5-7	18	18	0.109	12
8-10 X 6-1	18	24	0.109	11
9-9 X 6-7	18	24	0.109	10
10-11 X 7-1	18	24	0.109	9
11-10 X 7-7	18	24	0.109	8
12-10 X 8-4	18	24	0.109	8
14-1 X 8-9	18	24	0.109	7
15-4 X 9-3	18	24	0.138	7
15-10 X 9-10	18	24	0.138	7
16-7 X 10-1	18	36	0.138	7
13-3 X 9-4	31	24	0.109	13
14-2 X 9-10	31	24	0.109	12
15-4 X 10-4	31	24	0.138	11
16-3 X 10-10	31	36	0.138	11
17-2 X 11-4	31	36	0.138	10
18-1 X 11-10	31	36	0.168	9
19-3 X 12-4	31	36	0.168	9
19-11 X 12-10	31	36	0.168	8
20-7 X 13-2	31	36	0.188	8

1. FILL HEIGHTS SHOWN ARE MAXIMUM FROM TOP OF PIPE TO TOP OF SUBGRADE FOR THICKNESS SHOWN FOR PIPE INSTALLED WITH ADEQUATE BEDDING AND BACKFILL IN ACCORDANCE WITH STATE STANDARD SPECIFICATIONS FOR ROAD AND BRIDGE CONSTRUCTION.

2. EXCEPT FOR STRUCTURAL PLATE PIPE, ONE THICKNESS SHALL BE USED FOR THE FULL LENGTH OF PIPE WHICH SHALL BE THE THICKNESS REQUIRED BY THE MAXIMUM HEIGHT OF FILL OVER THE PIPE.

3. THE NUMBER OF SPOT WELDS PER FOOT FOR SPOT WELDED PIPE SHALL BE AT LEAST EQUAL TO THE NUMBER OF RIVETS REQUIRED.

4. THE DEFLECTION OF THE PIPE SHALL NOT EXCEED 5% DURING CONSTRUCTION. IF IT EXCEEDS 5% IT SHALL BE CORRECTED AT THE CONTRACTORS EXPENSE.

5. FOR BEDDING DETAILS SEE STD. DWG. 605-20

6. GAGES SHOWN ARE ADEQUATE ONLY FOR FINISHED CONSTRUCTION DURING CONSTRUCTION MINIMUM COVER SHALL BE PROVIDED TO PROTECT STRUCTURE FROM DAMAGE.

CORRUGATED ALUMINUM PIPE ARCHES

2 2/3" X 1/2" CORRUGATIONS

RIVETED, WELDED OR HELICAL FABRICATION

PIPE DIM. SPAN RISE INCHES	CORNER RADIUS INCHES	MIN. COVER INCHES	MIN. THICKNESS INCHES	MAX FILL HEIGHT FEET
18 X 11	4 3/4	18	0.060	15
22 X 13	4 3/4	18	0.060	14
25 X 16	4 1/2	18	0.060	12
29 X 18	4 1/2	18	0.060	10
36 X 22	5	18	0.060	9
43 X 27	5 1/2	18	0.075	9
50 X 31	6	18	0.105	8
58 X 36	7	18	0.135	8
65 X 40	8	18	0.135	8
72 X 44	9	18	0.164	8

2-5-80 INC. 5x1 CORR.
5-7-74 INCLUDED 12" PIPE - CHANGED CHARTS
3 27 73 CHANGED CHARTS

EUREKA ENERGY

SUPERSEDES

REVISIONS

Date	Appr.
3 27 73	
5-7-74	
2.5.80	

FILL HEIGHTS FOR PIPE CULVERTS

RECOMMENDED FOR APPROVAL:
Ralph Wilson — Oct 5 1981
PROJECT ENGINEER — Date
ACCEPTED
Gary A. Dani — Oct 5 1981
EUREKA ENERGY

STD. DWG. NO. 605-1

LOC	MARK	SIZE	No. BARS	LENGTH	TOTAL LENGTH	a	b	SKETCH
APRON	D1	4	23	16'-5"	410'-5"	14'-4"	2'-1"	
	D2		1	15'-5"		13'-4"		
	D3			14'-11"		12'-10"		
	D4			14'-5"		12'-4"		
	D5			13'-11"		11'-10"		
	D6			13'-5"		11'-4"		
	D7			12'-11"		10'-10"		
	D8			12'-5"		10'-4"		
	D9			11'-11"		9'-10"		
	D10			11'-5"		9'-4"		
	D11			10'-11"		8'-10"		
	D12			10'-5"		8'-4"		
	D13			9'-11"	238'-4"	7'-10"		
	D14			9'-5"		7'-4"		
	D15			8'-11"		6'-10"		
	D16			8'-5"		6'-4"		
	D17			7'-11"		5'-10"		1 SET (D2-D27)= 238'-4"
	D18			7'-5"		5'-4"		
	D19			6'-11"		4'-10"		
	D20			6'-5"		4'-4"		
	D21			5'-11"		3'-10"		
	D22			5'-5"		3'-4"		
	D23			4'-11"		2'-10"		
	D24			4'-5"		2'-4"		
	D25			3'-11"		1'-10"		
	D26			3'-5"		1'-4"		
	D27	4	1	2'-11"		0'-10"	2'-1"	
	E1	4	1	26'-5"				
	E2			28'-5"				
	E3			30'-5"				
	E4			32'-5"				
	E5			34'-5"				
	E6			36'-5"				
	E7			38'-5"	499'-5"			
	E8			40'-5"				
	E9			42'-5"				1 SET (E1-E13)= 499'-5"
	E10			44'-5"				
	E11			46'-5"				
	E12			48'-5"				
	E13	4	1	50'-5"				
SHORT WING WALL	F1	4	1	14'-6"				
	F2			2'-8"				
	F3			4'-8"				
	F4			6'-8"				
	F5			8'-8"	60'-6"			
	F6			10'-8"				1 SET (F1-F7)= 60'-6"
	F7	4	1	12'-8"				
						a	b	
LONG WING WALL	F8	4	4	16'-10"	203'-4"	13'-10	3'-0"	90°
	F9	4	4	34'-0"		31'-9"	2'-3"	116° 1 SET (F8-F9)= 203'-4"
	F10	4	1	29'-7"				
	F11			24'-10"				
	F12			20'-2"				
	F13			15'-5"				
	F14			10'-9"	138'-5"			
	F15			6'-0"				1 SET (F10-F16)= 138'-5"
	F16	4	1	31'-8"				
						a	b	
WING WALLS	G a	7	6	8'-2"	49'-0"	4'-10"	3'-4"	
	G b	6	7	6'-6"	45'-6"	3'-10"	2'-8"	1 SET (G1-G13)= 146'-3"
	G c	5	7	4'-10"	33'-10"	2'-10"	2'-0"	
SHORT WING WALL	G1	5	1	14'-3"		10'-9"	3'-6"	
	G2			13'-9"		10'-3"		
	G3			13'-3"		9'-9"		
	G4			12'-9"		9'-3"		
	G5			12'-3"	146'-3"	8'-9"		
	G6			11'-9"		8'-3"		
	G7			11'-3"		7'-9"		
	G8			10'-9"		7'-3"		
	G9			10'-3"		6'-9"		
	G10			9'-9"		6'-3"		
	G11			9'-3"		5'-9"		
	G12			8'-9"		5'-3"		
	G13	5	1	8'-3"		4'-9"	3'-6"	

LOC	MARK	SIZE	No. BARS	LENGTH	TOTAL LENGTH	a	b	SKETCH
LONG WING WALL	G14	5	1	8'-0"		4'-6"	3'-6"	
	G15			8'-2"		4'-8"		
	G16			8'-5"		4'-11"		
	G17			8'-8"		5'-2"		
	G18			8'-10"		5'-4"		
	G19			9'-1"		5'-7"		
	G20			9'-4"		5'-10"		
	G21			9'-6"		6'-0"		
	G22			9'-9"		6'-3"		
	G23			10'-0"		6'-6"		
	G24			10'-2"		6'-8"		
	G25			10'-5"		6'-11"		
	G26			10'-8"		7'-2"		
	G27			10'-10"		7'-4"		
	G28			11'-1"		7'-7"		
	G29			11'-4"		7'-10"		
	G30			11'-7"		8'-1"		
	G31			11'-9"	336'-5"	8'-3"		
	G32			12'-0"		8'-6"		
	G33			12'-3"		8'-9"		
	G34			12'-5"		8'-11"		ONE SET (G14-G43) = 336'-5"
	G35			12'-8"		9'-2"		
	G36			12'-11"		9'-5"		
	G37			13'-1"		9'-7"		
	G38			13'-4"		9'-10"		
	G39			13'-7"		10'-1"		
	G40			13'-10"		10'-4"		
	G41			14'-0"		10'-6"		
	G42			14'-3"		10'-9"		
	G43	5	1	14'-6"		11'-0"	3'-6"	
FTG. & CUTOFF WALL								
	L1	4	3	58'-10"	176'-6"			
	L2	4	6	6'-0"	36'-0"			
	L3	4	3	13'-5"	40'-3"			
	L4	4	3	30'-0"	90'-0"			
HEAD WALL	T1	4	9	12'-1"	108'-9"			
	U1	8	4	27'-0"	108'-0"			
	U2	7	4	27'-0"	108'-0"			
	W1	5	4	5'-6"				
	W2			7'6"				
	W3			9'-6"	126'-0"			
	W4			5'-6"				
	W5	5	4	3'-6"				

REINFORCING STEEL QUANITIES

200'-11" OF #4 @ 0.668 lbs/FT. =	1337.5	lbs.
624'-6" OF #5 @ 1.043 lbs./FT. =	670.1	lbs.
45'-6" OF #6 @ 1.502 lbs./FT. =	68.3	lbs.
157'-0" OF #7 @ 2.044 lbs./FT. =	320.9	lbs.
108'-0" OF #8 @ 2.670 lbs/FT. =	288.4	lbs.
TOTAL =	2685	lbs.

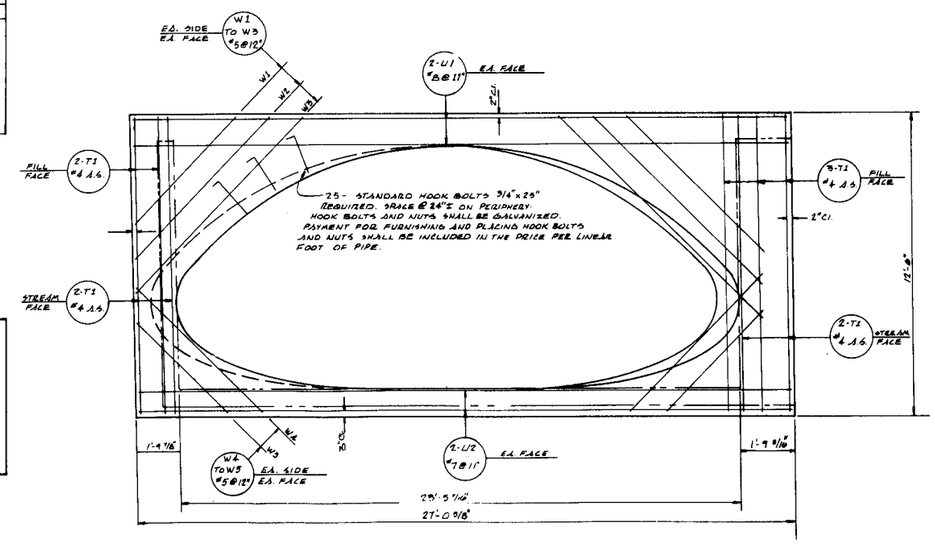

SECTION "C"

GENERAL NOTES

1- MATERIALS, CONSTRUCTION, AND WORKMANSHIP SHALL BE IN ACCORDANCE WITH THE STATE OF UTAH STANDARD SPECIFICATIONS FOR ROAD AND BRIDGE CONSTRUCTION, EDITION OF 1979, AND SUPPLEMENTS THERETO WHICH ARE IN EFFECT ON THE DATE OF REQUEST FOR BIDS.

2- ALL REINFORCING STEEL SHALL BE DEFORMED BILLET- STEEL BARS CONFORMING TO ASTM DESIGNATION A-615-68, GRADE 40.

3- TYPE II CEMENT (LOW ALKALI) REQUIRED.

4- PLACE FULL FILL AS FAR AS PRACTICAL BEFORE BUILDING HEADWALL. CURE CONCRETE 7 DAYS BEFORE BACKFILLING.

DESIGN DATA

THE DESIGN IS IN ACCORDANCE WITH THE AASHO SPECIFICATIONS OF 1969 AND INTERIM SPECIFICATIONS.

f_c = 1,200 p.s.i.
f_s = 20,000 p.s.i.
n = 10

QUANTITIES

(FOR ONE HEADWALL ONLY)

CLASS A CONCRETE (AE) = 35.36 CU. YD.
REINFORCING STEEL = 2685 LBS.

NOTE: 45° X-ING = AS SHOWN
135° X-ING = OPPOSITE HAND

No.	Revision	By	Date

EUREKA ENERGY CO.
A SUBSIDIARY OF PACIFIC GAS & ELECTRIC
215 MARKET STREET
SAN FRANCISCO, CALIF. 94106
415-981-9232
90 W. 100 NO. ST.
PRICE, UTAH 84501
801-637-6610

STANDARD HEADWALL for 16'-7"x 10'-1" STRUCTURAL PLATE PIPE

45° or 135° X-ING ANGLE

ACCEPTED 10/27/81

Designed	Checked	Approved	Date	Sheet
R.E.W.	J.Mc.	Ralph E. Dixon	Oct. 5, 1981	2 of 2
Drawn	Date	Scale	Project Number	DRAWING NO.
C.A.	7-80	No Scale	P.E. 10-01-02	H-3

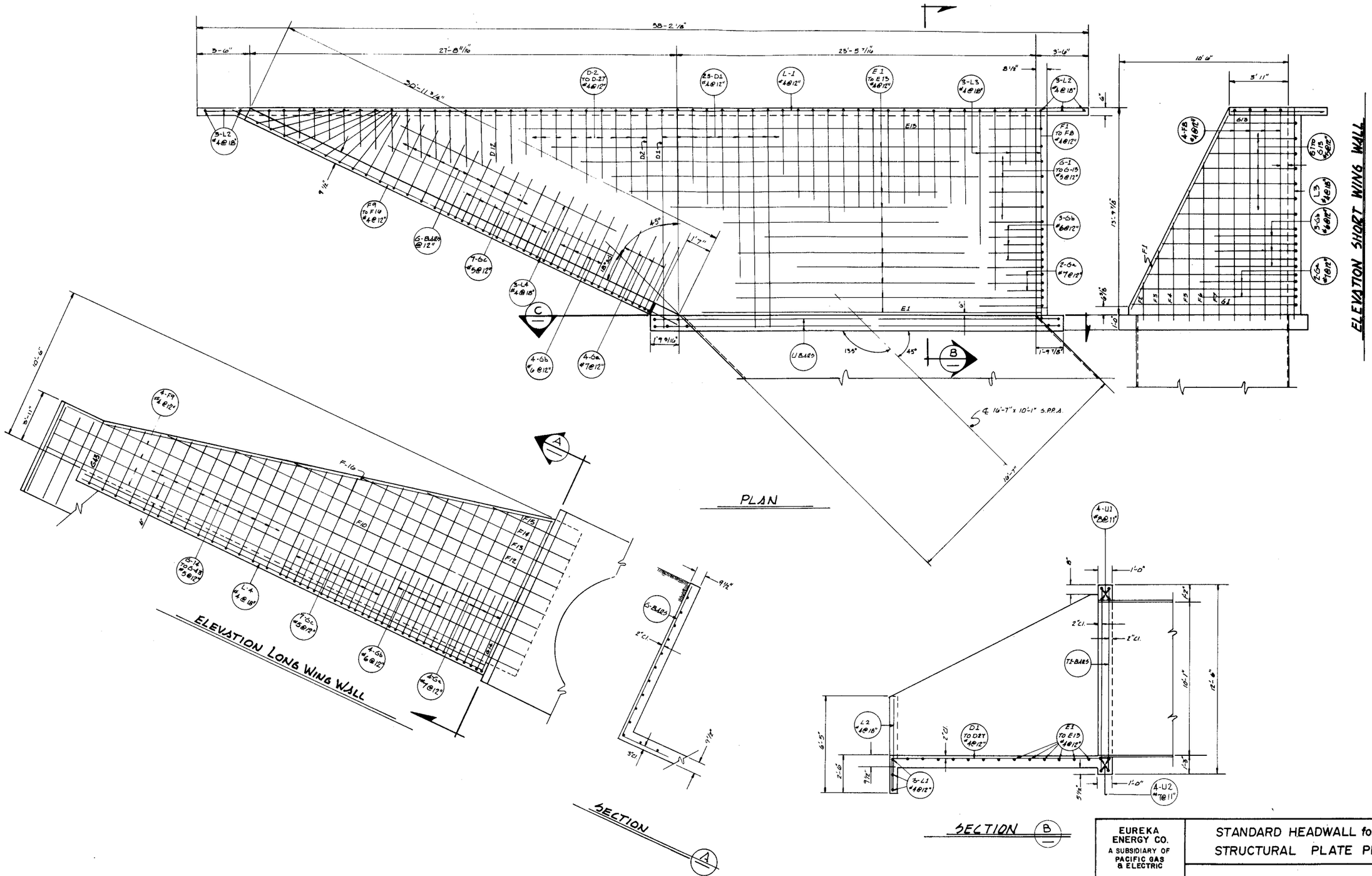

No.	Revision	By	Date

EUREKA ENERGY CO.
A SUBSIDIARY OF PACIFIC GAS & ELECTRIC
215 MARKET STREET, SAN FRANCISCO, CALIF. 94106
415-981-5232
90 W. 100 NO. ST. PRICE, UTAH 84501
801-637-4810

STANDARD HEADWALL for 16'-7" x 10'-1" STRUCTURAL PLATE PIPE

45° x 135° X-ING ANGLE

ACCEPTED 10/30/81

Designed	Checked	Approved	Date	Sheet
R. E. W.	J.M.L.	Ralph Erickson	Oct. 5, 1981	1 of 2
Drawn	**Date**	**Scale**	**Project Number**	**DRAWING NO.**
C.A.	7-80	NO SCALE	RE 10-01-02	H-3

LOC.	MARK	SIZE	NO. BARS	LENGTH	TOTAL LENGTH	a	SKETCH
APRON	D1	4	18	18'-1"	325'-6"	16'-0"	1 Set(D2-D29)= 280'-0"
	D2		1	16'-9"		14'-8"	
	D3			16'-3"		14'-2"	
	D4			15'-9"		13'-8"	
	D5			15'-3"		13'-2"	
	D6			14'-9"		12'-8"	
	D7			14'-3"		12'-2"	
	D8			13'-9"		11'-8"	
	D9			13'-3"		11'-2"	
	D10			12'-9"		10'-8"	
	D11			12'-3"		10'-2"	
	D12			11'-9"		9'-8"	
	D13			11'-3"		9'-2"	
	D14			10'-9"		8'-8"	
	D15			10'-3"		8'-2"	
	D16			9'-9"	280'-0"	7'-8"	
	D17			9'-3"		7'-2"	
	D18			8'-9"		6'-8"	
	D19			8'-3"		6'-2"	
	D20			7'-9"		5'-8"	
	D21			7'-3"		5'-2"	
	D22			6'-9"		4'-8"	
	D23			6'-3"		4'-2"	
	D24			5'-9"		3'-8"	
	D25			5'-3"		3'-2"	
	D26			4'-9"		2'-8"	
	D27			4'-3"		2'-2"	
	D28	1	1	3'-9"		1'-8"	
	D29	4	1	3'-3"		1'-2"	
APRON	E1	4	1	19'-6"	324'-6"		1 Set(E1-E11) = 324'-6"
	E2		1	21'-6"			
	E3			23'-6"			
	E4			25'-6"			
	E5			27'-6"			
	E6			29'-6"			
	E7			31'-6"			
	E8			33'-6"			
	E9			35'-6"			
	E10			37'-6"			
	E11			39'-6"			
						L	
	E12			42'-6"	182'-0"	41'-6"	1'-0" / L
	E13			44'-6"		43'-6"	
	E14		1	46'-6"		45'-6"	
	E15	4	1	48'-6"		47'-6"	1 Set(E12-E15) = 182'-0"
SHORT WING WALL	F1	4	2	15'-11"	126'-10"		1 Set(F1-F7) = 63'-5"
	F2			2'-11"			
	F3			4'-11"			
	F4			6'-11"			
	F5			8'-11"			
	F6			10'-11"			
	F7	4	2	12'-11"			
						a	b	θ
	F8	4	6	17'-4"	603'-0"	14'-2"	3'-2"	90°
	F9			15'-10"		14'-2"	1'-8"	90°
	F10			34'-6"		31'-8"	2'-10"	154°
	F11	4	6	32'-10"		31'-8"	1'-2"	154°
LONG WING WALL	F12	4	2	29'-0"	279'-4"		1 Set(F8-F11) = 100'-6"
	F13			24'-6"			1 Set(F12-F18) = 139'-8"
	F14			20'-0"			
	F15			15'-6"			
	F16			11'-1"			
	F17			6'-7"			
	F18	4	2	33'-0"			
						h	a
WING WALLS	Ga	7	6	10'-5"	62'-6"	6'-3"	4'-5"
	Gb	6	6	9'-5'	56'-6"	5'-3"	
	Gc	5	15	8'-5"	126'-3"	4'-3"	
SHORT WING WALL	G1	5	1	17'-10"	204'-2"	13'-8"	1 Set(G1-G14) = 204'-2"
	G2			17'-4"		13'-2"	
	G3			16'-10"		12'-8"	
	G4			16'-4"		12'-2"	
	G5			15'-10"		11'-8"	
	G6			15'-4"		11'-2"	
	G7			14'-10"		10'-8"	
	G8			14'-4"		10'-2"	
	G9			13'-10"		9'-8"	
	G10			13'-4"		9'-2"	
	G11			12'-10"		8'-8"	
	G12			12'-4"		8'-2"	
	G13			11'-10"		7'-8"	
	G14	5	1	11'-4"		7'-2"	4'-5"
LONG WING WALL	G15	5	1	17'-10"	459'-2"	13'-8"	4'-5"
	G16			17'-7"		13'-5"	
	G17			17'-4"		13'-2"	
	G18			17'-2"		13'-0"	
	G19			16'-11"		12'-9"	
	G20			16'-8"		12'-6"	
	G21			16'-6"		12'-4"	
	G22			16'-3"		12'-1"	
	G23			16'-0"		11'-10"	
	G24			15'-10"		11'-8"	
	G25			15'-7"		11'-5"	
	G26			15'-4"		11'-2"	
	G27			15'-1"		10'-11"	
	G28			14'-11"		10'-9"	
	G29			14'-8"		10'-6"	
	G30			14'-5"		10'-3"	
	G31			14'-3"		10'-1"	
	G32			14'-0"		9'-10"	
	G33			13'-10"		9'-8"	
	G34	5	1	13'-7"		9'-5"	4'-5"

LOC.	MARK	SIZE	NO. BARS	LENGTH	TOTAL LENGTH	h	a	SKETCH
LONG WING WALL	G35	5	1	13'-4"		9'-2"	4'-5"	1 Set(G15-G46)= 459'-2"
	G36			13'-2"		9'-0"		
	G37			12'-11"		8'-9"		
	G38			12'-8"		8'-6"		
	G39			12'-5"		8'-3"		
	G40			12'-3"		8'-1"		
	G41			12'-0"		7'-10"		
	G42			11'-9"		7'-7"		
	G43			11'-7"		7'-5"		
	G44			11'-4"		7'-2"		
	G45	1	1	11'-1"		6'-11"		
	G46	5	1	10'-11"		6'-9"	4'-5"	
SHORT WING WALL	H1	4	1	13'-8"	145'-10"			1 Set(H1-H14) = 145'-10"
	H2			13'-2"				
	H3			12'-8"				
	H4			12'-2"				
	H5			11'-8"				
	H6			11'-2"				
	H7			10'-8"				
	H8			10'-2"				
	H9			9'-8"				
	H10			9'-2"				
	H11			8'-8"				
	H12			8'-2"				
	H13			7'-8"				
	H14	4	1	7'-2"				
LONG WING WALL	H15	4	1	13'-8"	325'-10"			1 Set(H15-H46) = 325'-10"
	H16			13'-5"				
	H17			13'-2"				
	H18			13'-0"				
	H19			12'-9"				
	H20			12'-6"				
	H21			12'-4"				
	H22			12'-1"				
	H23			11'-10"				
	H24			11'-8"				
	H25			11'-5"				
	H26			11'-2"				
	H27			10'-11"				
	H28			10'-9"				
	H29			10'-6"				
	H30			10'-3"				
	H31			10'-1"				
	H32			9'-10"				
	H33			9'-8"				
	H34			9'-5"				
	H35			9'-2"				
	H36			9'-0"				
	H37			8'-9"				
	H38			8'-6"				
	H39			8'-3"				
	H40			8'-1"				
	H41			7'-10"				
	H42			7'-7"				
	H43			7'-5"				
	H44			7'-2"				
	H45			6'-11"				
	H46	4	1	6'-9"				
FOOTING CUT-OFF AND WALL	J1	5	56	3'-7"	200'-8"			
	J2	4	2	16'-5"	108'-4"			
	J3	4	2	37'-9"				
	J4	4	4	3'-8"	14'-8"			1 Set(J2-J3) = 54'-2"
	L1	4	3	54'-7"	163'-9"			1'-0" / 53'-7"
	L2	4	6	8'-1"	48'-6"			
	L3	4	3	14'-6"	141'-0"			
	L4	4	3	32'-6"				1 Set(L2-L3) = 47'-0"
HEADWALL	T1	5	9	14'-6"	130'-6"			
	T2		4	9'-6"	38'-0"			
	T3		6	7'-6"	78'-0"			
	T4		6	5'-6"				
	T5		2	3'-6"	58'-0"			
	T6			10'-6"				
	T7			8'-6"				
	T8		2	6'-6"				
	T9		4	9'-0"	36'-0"			
	T10		6	7'-0"	72'-0"			
	T11		6	5'-0"				
	T12		2	3'-0"	54'-0"			
	T13			10'-0"				
	T14			8'-0"				
	T15	5	2	6'-0"				1 Set(T3-T4) = 13'-0" 1 Set(T5-T8) = 29'-0" 1 Set(T10-T11) = 12'-0" 1 Set(T12-T15) = 27'-0"
	U1	8	4	19'-9"	79'-0"			
	U2	7	4	19'-9"	79'0"			
JOINT DETAILS	V1	4	3	13'-10"	41'-6"			
	V2	4	13	3'-4"	43'-4"			2'-0" / 1'-7" / 154° / 9"
	V3	4	13	3'-4"	43'-4"			6" / 1'-5" / 1'-5"

79'-0"	of # 8 bars	2.670 lbs./ft. = 210.9 lbs.
141'6"	of # 7 bars	2.044 lbs./ft = 289.2 lbs.
56'-6"	of # 6 bars	1.502 lbs./ft. = 84.9 lbs.
1456'-9"	of # 5 bars	1.043 lbs./ft. = 1519.4 lbs.
3197'-3"	of # 4 bars	0.668 lbs./ft. = 2136.8 lbs.
		Total Weight = 4241.20 lbs.

Unless otherwise shown, all dimensions are out to out of bars.

GENERAL NOTES

1. Materials, construction and workmanship shall be in accordance with the State of Utah Standard Specifications for Road and Bridge Construction, Edition of 1979, and supplements thereto which are in effect on the date of request for bids.
2. All reinforcing steel shall be deformed billet steel bars conforming to A.S.T.M. designation A615-68, Grade 60.
3. Type II cement (low alkali) required.
4. Place entire fill as far as practical before building headwall.
5. Cure concrete 7 days before backfilling.

DESIGN DATA

1. The design is in accordance with A.A.S.H.O. specifications of 1973.

f_c = 1,400 p.s.i.
f_s = 24,000 p.s.i.
n = 8

QUANTITIES (One headwall only)

Class AA concrete (AE)	40.850 cu. yd.
Reinforcing steel	4241.20 lbs.

45° X-ING ∠ AS SHOWN
135° X-ING ∠ OPPOSITE HAND

No	Revision	By	Date

EUREKA ENERGY CO.
A SUBSIDIARY OF PACIFIC GAS & ELECTRIC
215 MARKET STREET SAN FRANCISCO, CALIF. 94106 415-781-3232
90 W. 100 NO. ST. PRICE, UTAH 84501 801-637-8810

STANDARD HEADWALL for 144" STRUCTURAL PLATE PIPE

45°-135° X-ING-ANGLE

ACCEPTED 10/25/91

Designed	Checked	Approved	Date	Sheet
R.E.W.	J.Mc.	Ralph Watson	Oct 5, 1991	3 of 3
Drawn	Date	Scale	Project Number	Drawing No.
D.G.	7-80	No Scale	PE-10-01-02	H-2

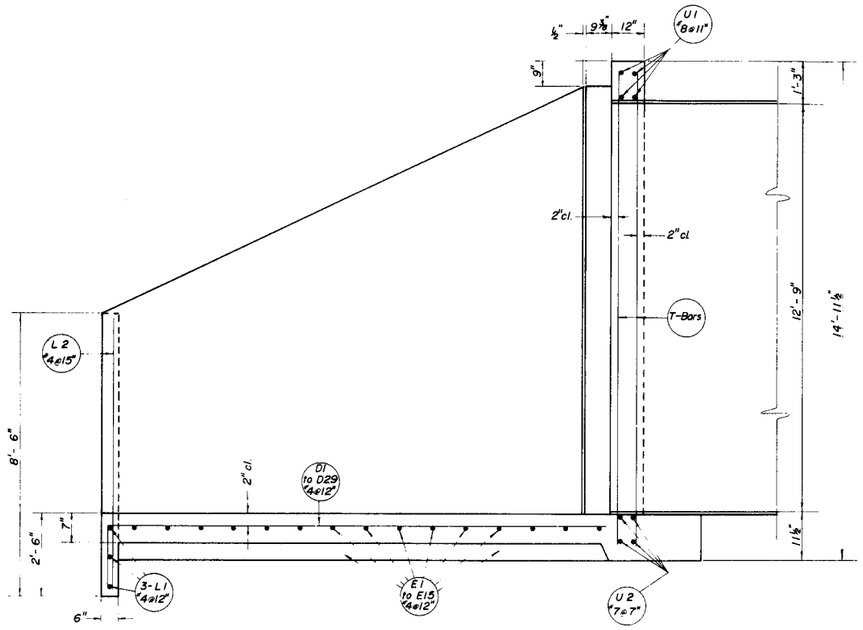

SECTION B

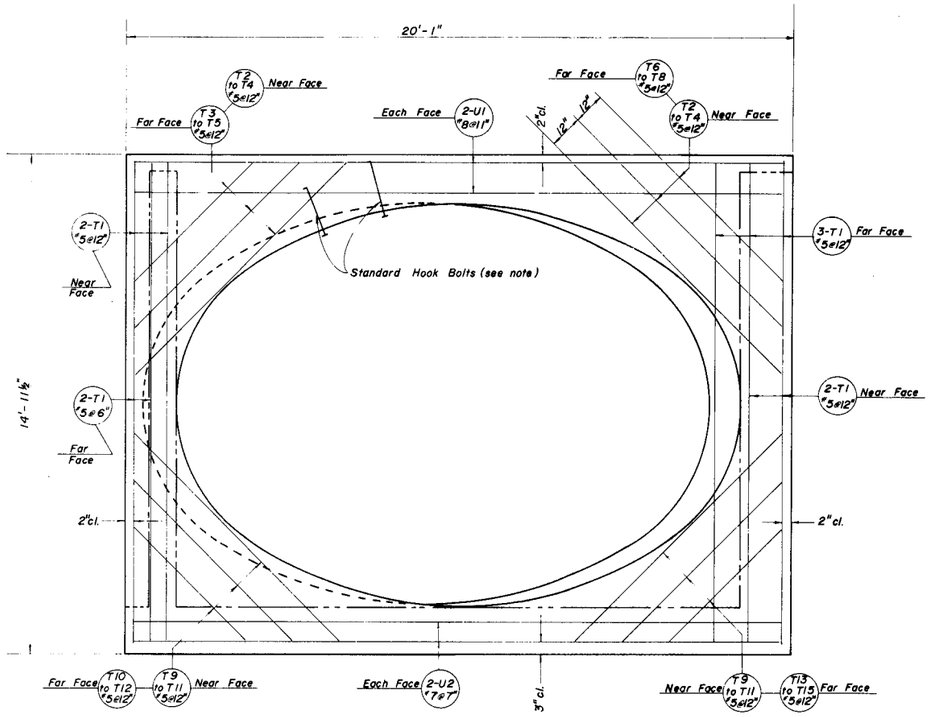

SECTION C

Note: 23- Standard Hook Bolts ¾" ø x 25" required. Space @ 24" ± on periphery and position hook bolts 6" from end of pipe. Hook bolts and nuts shall be galvanized. Payment for furnishing and placing hook bolts and nuts shall be included in the price per linear foot of pipe.

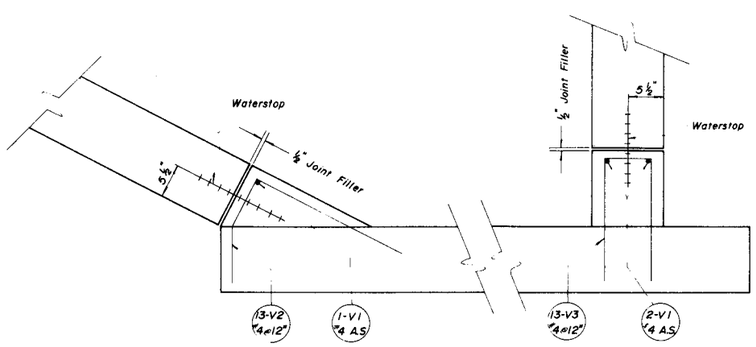

JOINT DETAILS

½" JOINT FILLER
4-Pieces 4½" x 13'-3" Joint filler shall be AASHO Designation M-123-65

WATERSTOP
2-Pieces 13'-3" long. Waterstop shall be sealtight DUO-PVC Type 6180-D or approved equal.

No.	Revision	By	Date

EUREKA ENERGY CO.
A SUBSIDIARY OF PACIFIC GAS & ELECTRIC
215 MARKET STREET, SAN FRANCISCO, CALIF. 94106
415-981-3232
90 W., 100 NO. ST. PRICE, UTAH 84501
801-637-6810

HEADWALL for 144"
STRUCTURAL PLATE PIPE

45° & 135° X-ING ANGLE

ACCEPTED Gary A. Dunn 10/27/81

Designed	Checked	Approved	Date	Sheet
R.E.W.	J.Mc.	Ralph Watson	Oct. 5, 1981	2 of 3
Drawn	Date	Scale	Project Number	Drawing No.
D.G.	7-80	No Scale	PE-10-01-02	H-2

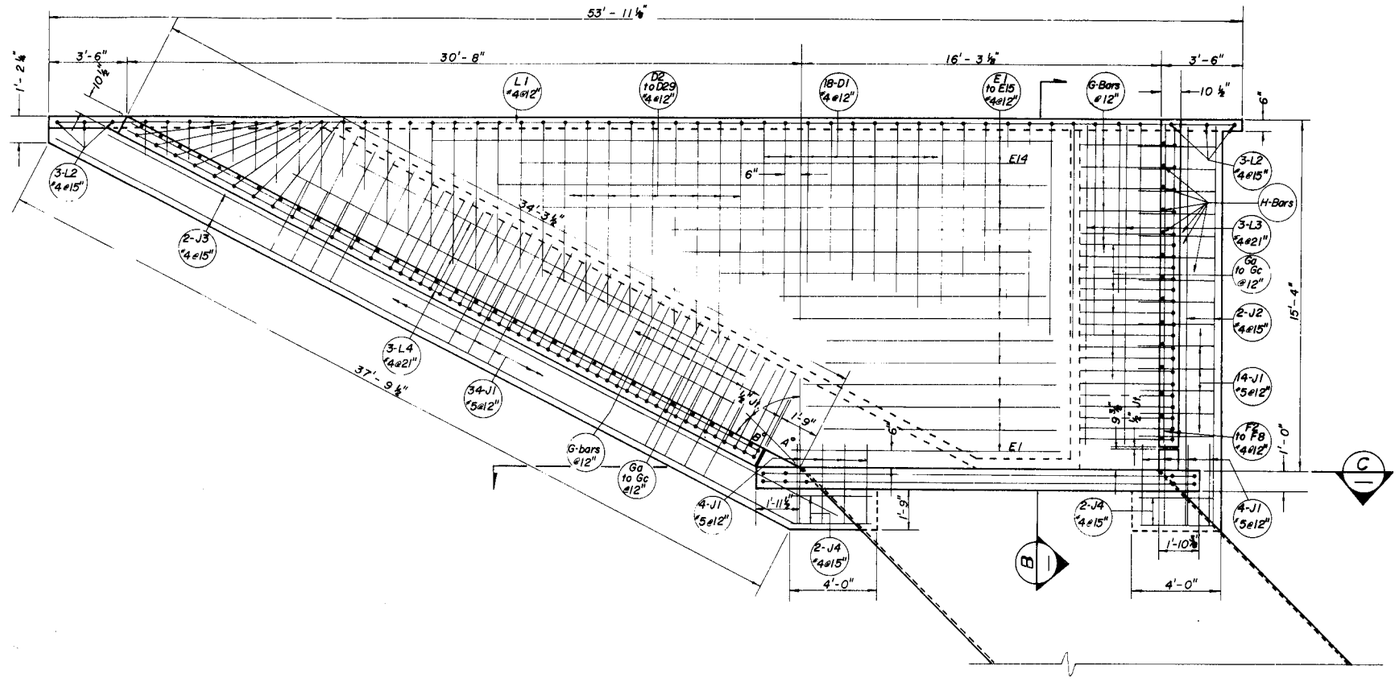

PLAN

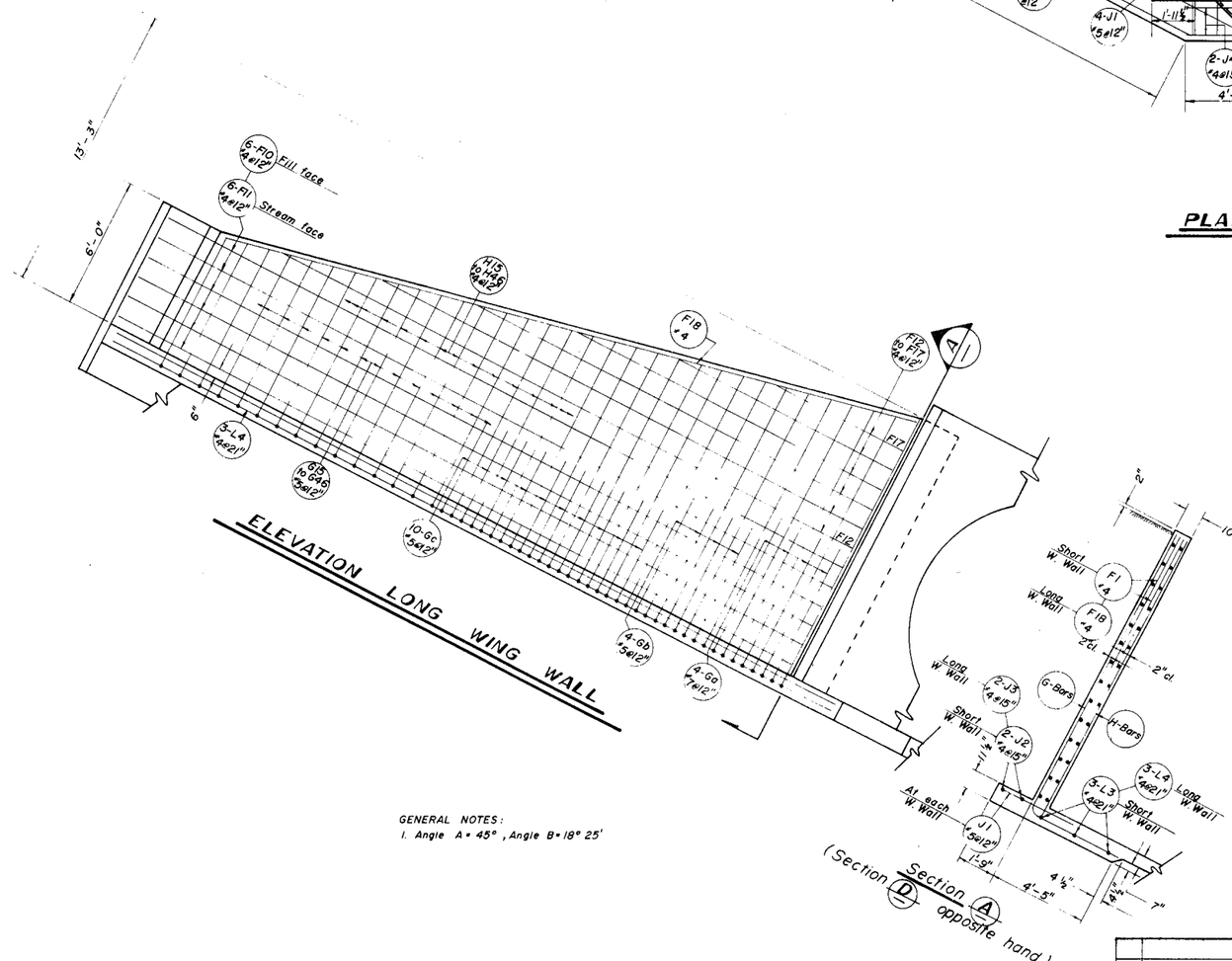

ELEVATION LONG WING WALL

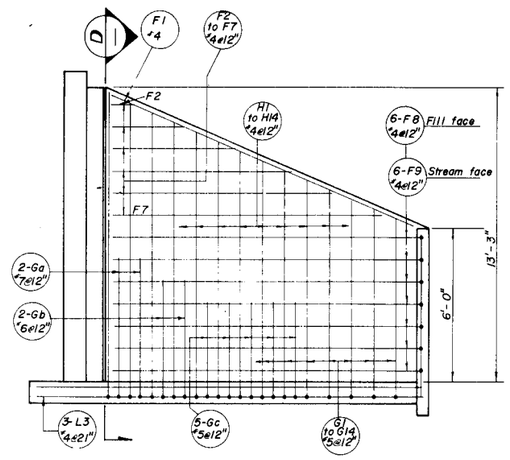

ELEVATION SHORT WING WALL

GENERAL NOTES:
1. Angle A = 45°, Angle B = 18° 25'

No.	Revision	By	Date

EUREKA ENERGY CO.
A SUBSIDIARY OF PACIFIC GAS & ELECTRIC
215 MARKET STREET
SAN FRANCISCO, CALIF.
94106
415-981-3232
80 W. 100 NO. ST.
PRICE, UTAH
84501
801-637-8610

STANDARD HEADWALL for 144" STRUCTURAL PLATE PIPE

45° - 135° X ING ANGLE

ACCEPTED 12/23/81

Designed	Checked	Approved	Date	Sheet
R.E.W.	J. Mc.	Ralph E. Wilson Oct. 5, '81		1 of 3
Drawn	Date	Scale	Project Number	Drawing No.
D.G.	7-80	NO SCALE	PE-10-01-02	H-2

LOC.	MARK	SIZE	NO. BARS	L'GTH.	TOTAL L'GTH	a	SKETCH
Apron	D1	4	15	15'-6	232'-6	13'-5	
	D2	↑	1	14'-1		12'-0	
	D3		↑	13'-7		11'-6	
	D4			13'-1		11'-0	
	D5			12'-7		10'-6	
	D6			12'-1		10'-0	
	D7			11'-7		9'-6	
	D8			11'-1'		9'-0	
	D9			10'-7		8'-6	
	D10			10'-1'		8'-0	
	D11			9'-7	190'-9	7'-6'	
	D12			9'-1'		7'-0	
	D13			8'-7		6'-6	
	D14			8'-1		6'-0	
	D15			7'-7		5'-6	
	D16			7'-1'		5'-0	
	D17			6'-7		4'-6	
	D18			6'-1'		4'-0	
	D19			5'-7		3'-6	
	D20			5'-1		3'-0	
	D21	↓	↓	4'-7		2'-6	
	D22	4	1	4'-1		2'-0	
Apron	E1	4	1	16'-5			
	E2	↑	↑	18'-5			
	E3			20'-5			
	E4			22'-5			
	E5			24'-5			
	E6			26'-5	329'-0		
	E7			28'-5			
	E8			30'-5			
	E9			32'-5			
	E10			34'-5			
	E11	↓	↓	36'-5			
	E12	4	1	38'-5			
Short Wing Wall	F1	4	1	15'-0			
	F2	↑	↑	4'-1			
	F3			6'-1	55'-5		
	F4			8'-1			
	F5		↓	10'-1			
	F6		1	12'-1			
						a / b / θ	
Long Wing Wall	F7		5	16'-3	81'-3	13'-5 / 2'-10 / 90°	
	F8		5	32'-10	164'-2	30'-0 / 2'-10 / 53°	
	F9		1	26'-2			
	F10		↑	21'-9			
	F11			17'-3	116'-3		
	F12			12'-9			
	F13	↓	↓	8'-4			
	F14	4	1	30'-0			
						a / h	
Wing Walls	Ga	7	5	8'-2	40'-10	3'-4 / 4'-10	
	Gb	6	6	6'-6	39'-0	2'-8 / 3'-10	
	Gc	5	12	4'-10	58'-0	2'-0 / 2'-10	
Short Wing Wall	G1	5	1	15'-2		3'-8 / 11'-6	
	G2	↑	↑	14'-8		11'-0	
	G3			14'-2		10'-6	
	G4			13'-8		10'-0	
	G5	↓	↓	13'-2		9'-6	
	G6	5	1	12'-8	149'-0	3'-8 / 9'-0	

1 set (D2-D22) = 190'-9"

1 set (E1-E12) = 329'-0"

1 set (F1-F6) = 55'-5"

1 set (F9-F14) = 116'-3"

1 set (G1-G12) = 149'-0"

LOC.	MARK	SIZE	NO. BARS	L'GTH.	TOTAL L'GTH	a	n	SKETCH
Short Wing Wall	G7	5	1	12'-2		3'-8	8'-6	
	G8	↑	↑	11'-8		↑	8'-0	
	G9			11'-2			7'-6	
	G10			10'-8			7'-0	
	G11	↓	↓	10'-2		↓	6'-6	
	G12	5	1	9'-8		3'-8	6'-0	
Long Wing Wall	G13	5	1	15'-2		3'-8	11'-6	
	G14	↑	↑	14'-11		↑	11'-3	
	G15			14'-8			11'-0	
	G16			14'-6			10'-10	
	G17			14'-3			10'-7	
	G18			14'-0			10'-4	
	G19			13'-9			10'-1	
	G20			13'-7			9'-11	
	G21			13'-4			9'-8	
	G22			13'-1			9'-5	
	G23			12'-11			9'-3	
	G24			12'-8			9'-0	
	G25			12'-5			8'-9	
	G26			12'-3			8'-7	
	G27			12'-0			8'-4	
	G28			11'-9			8'-1	
	G29			11'-7			7'-11	
	G30			11'-4			7'-8	
	G31			11'-1	330'-1		7'-5	
	G32			10'-11			7'-3	
	G33			10'-8			7'-0	
	G34			10'-5			6'-9	
	G35			10'-3			6'-7	
	G36			10'-0			6'-4	
	G37			9'-9			6'-1	
	G38	↓	↓	9'-6		↓	5'-10	
	G39	5	1	9'-4		3'-8	5'-8	
Extra & W. W. Flgs.	L1	4	3	46'-9	140'-3			
	L2	↑	6	7'-1	42'-6			
	L3	↓	3	12'-7	37'-9			
	L4	4	3	28'-1"	84'-3			
Headwall	T1	4	10	12'-3	122'-6			
	T2	↑	4	6'-0				
	T3		↑	7'-6	124'-0			
	T4	↓	↓	8'-0				
	T5	4	4	9'-6				
Headwall	U1	6	4	17'-6	70'-0			
	U2	5	4	17'-6	70'-0			

1 set (G13-G39) = 330'-1

1 set (T2-T5) = 31'-0

40'-10" of #7 bars @ 2.044 lb/ft = 83.5 Lb
109'-0" of #6 bars @ 1.502 lb/ft = 163.7 Lb
607'-1" of #5 bars @ 1.043 lb/ft = 633.2 Lb
1720'-7" of #4 bars @ 0.668 lb/ft = 1149.3 Lb

Total Weight = 2029.7 Lb

Unless otherwise shown, all dimensions are out to out of bars.

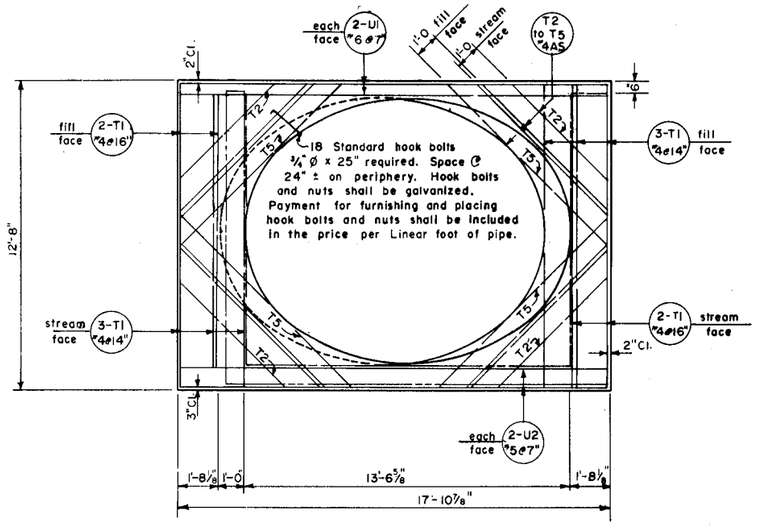

Section C

GENERAL NOTES

Materials, construction, and workmanship shall be in accordance with the Utah Department of Transportation Standard Specifications for Road and Bridge Construction, Edition of 1979 and supplements thereto which are in effect at the date of request for bids.

All reinforcing steel shall be deformed billet steel bars conforming to A.S.T.M. designation A615-68, Grade 40.

Type II cement (Low alkali) required.

Place full fill as practical before building headwall. Cure Concrete 7 days before backfilling.

DESIGN DATA

The design is in accordance with A.A.S.H.O. Specifications of 1965
fc = 1200 p.s.i. fs = 20,000 p.s.i n = 10

QUANTITIES
(One headwall only.)

Class A Concrete (A.E.)	27 Cu. yd.
Reinforcing Steel	2030 Lb.

Note:
45° X-ing ∠ as shown
135° X-ing ∠ opposite hand

No.	Revision	By	Date

EUREKA ENERGY CO.
A SUBSIDIARY OF PACIFIC GAS & ELECTRIC
215 MARKET STREET SAN FRANCISCO, CALIF. 94106 415-981-3232
90 W., 100 NO. ST. PRICE, UTAH 84501 801-637-5610

STANDARD HEADWALL for 120" STRUCTURAL PLATE PIPE

45° - 135° X - ING ANGLE

ACCEPTED 10/27/81

Designed	Checked	Approved	Date	Sheet
R.E.W	MA	Ralph E. Walton	Oct 5, 1981	2 of 2
Drawn	Date	Scale	Project Number	Drawing No.
MA	7-80	NOT TO SCALE	PE-10-01-02	H-1

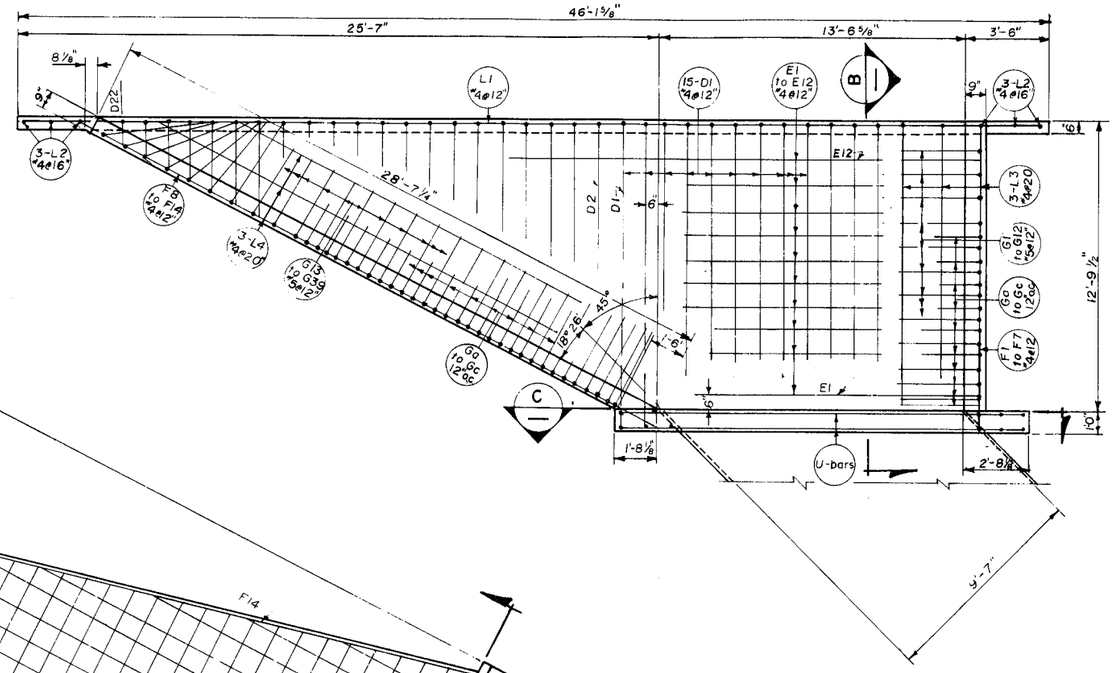

PLAN

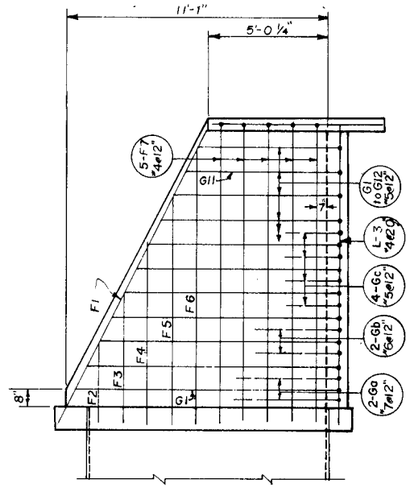

ELEVATION SHORT WING WALL

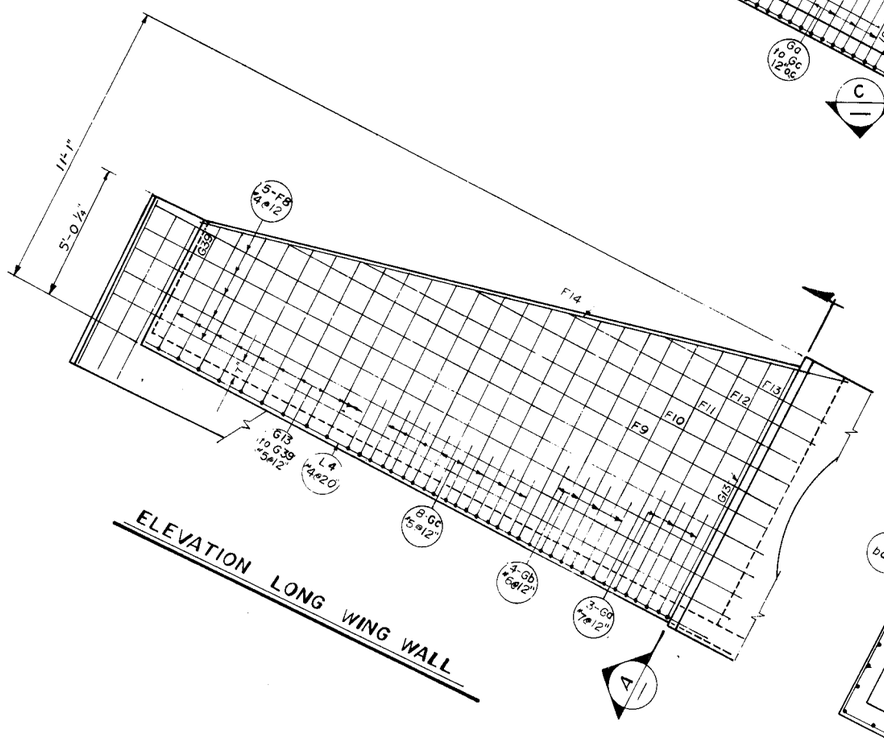

ELEVATION LONG WING WALL

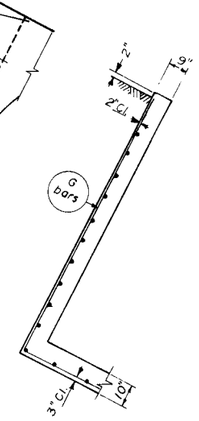

Section A

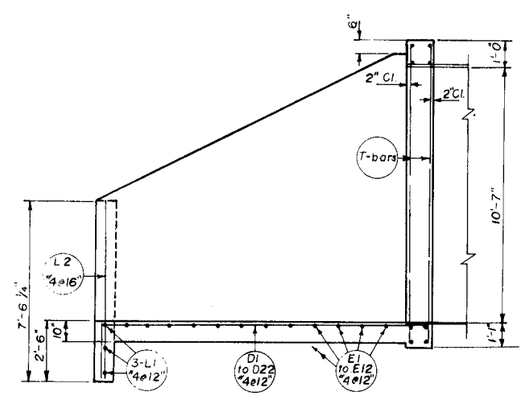

Section C

No.	Revision	By	Date

EUREKA ENERGY CO.
A SUBSIDIARY OF PACIFIC GAS & ELECTRIC
215 MARKET STREET
SAN FRANCISCO, CALIF. 94106
415-981-3232
90 W., 100 NO. ST.
PRICE, UTAH 84501
801-637-6610

STANDARD HEADWALL for 120" STRUCTURAL PLATE PIPE

45° - 135° X-ING ANGLE

ACCEPTED 10/07/81

Designed	Checked	Approved	Date	Sheet
R.E.W	J. Mc	Ralph E. Walton	Oct 5, 1981	1 of 2
Drawn	**Date**	**Scale**	**Project Number**	**Drawing No.**
M.A.	7-80	NOT TO SCALE	PE 10-01-02	H - 1

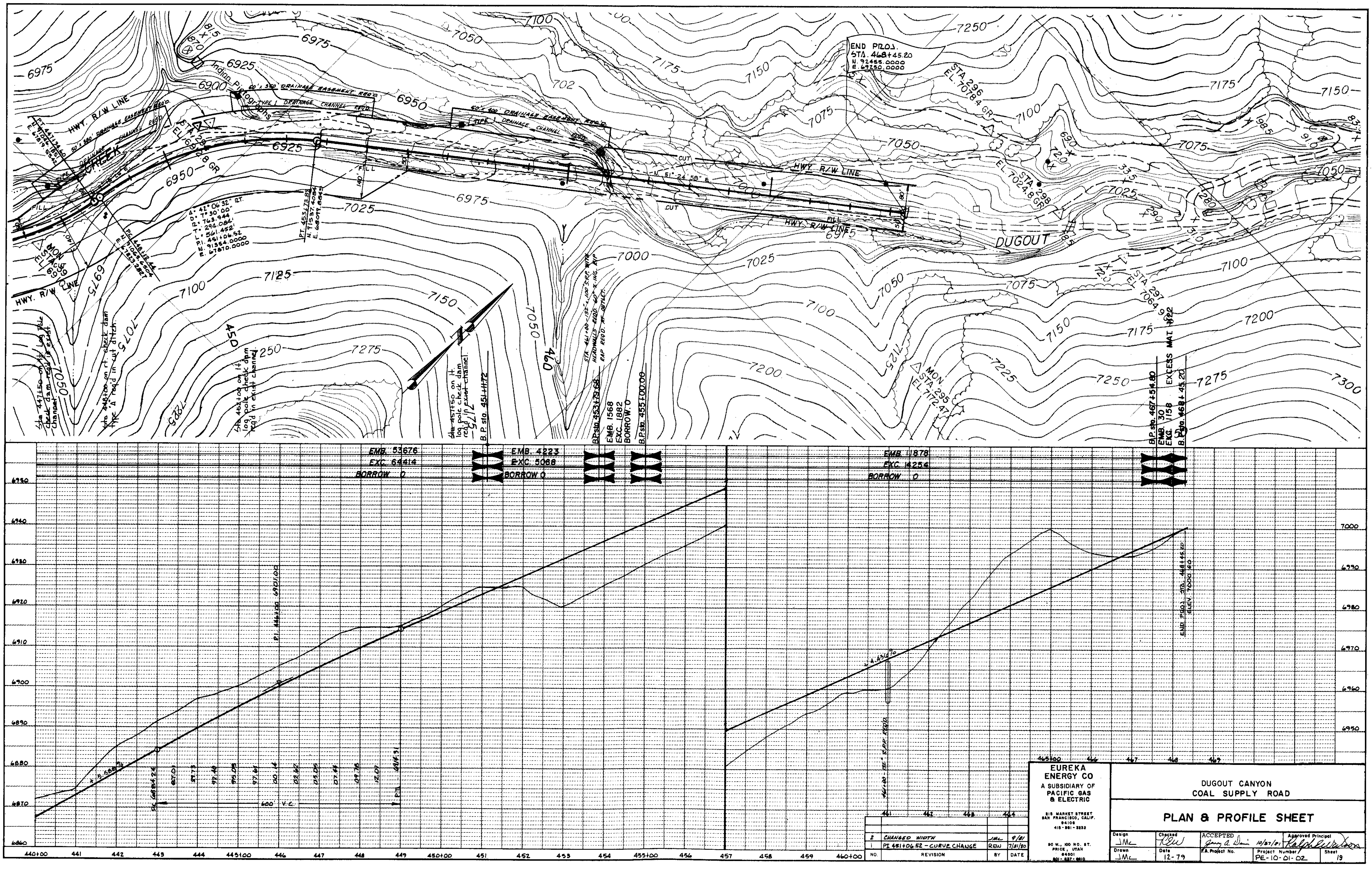

END PROJ. STA. 468+45.20
HWY. R/W LINE
DUGOUT
CREEK
Indian Pictographs
TYPE I DRAINAGE CHANNEL REQ'D
60' x 300' DRAINAGE EASEMENT REQ'D
60' x 400' DRAINAGE EASEMENT REQ'D
CUT
FILL
EMB. 53676
EXC. 64414
BORROW 0
EMB. 4223
EXC. 5068
BORROW 0
EMB. 1568
EXC. 1882
BORROW 0
EMB. 1878
EXC. 14254
BORROW 0
EMB. 30
EXC. 1158
EXCESS MAT'L 1122
600' V.C.
EUREKA ENERGY CO
A SUBSIDIARY OF PACIFIC GAS & ELECTRIC
DUGOUT CANYON COAL SUPPLY ROAD
PLAN & PROFILE SHEET
2 CHANGED WIDTH JMc 9/81
1 PI 451+06.52 - CURVE CHANGE REW 7/21/80
NO. REVISION BY DATE
Design JMc
Checked RLW
Drawn JMc
Date 12-79
Project Number PE-10-01-02
Sheet 19

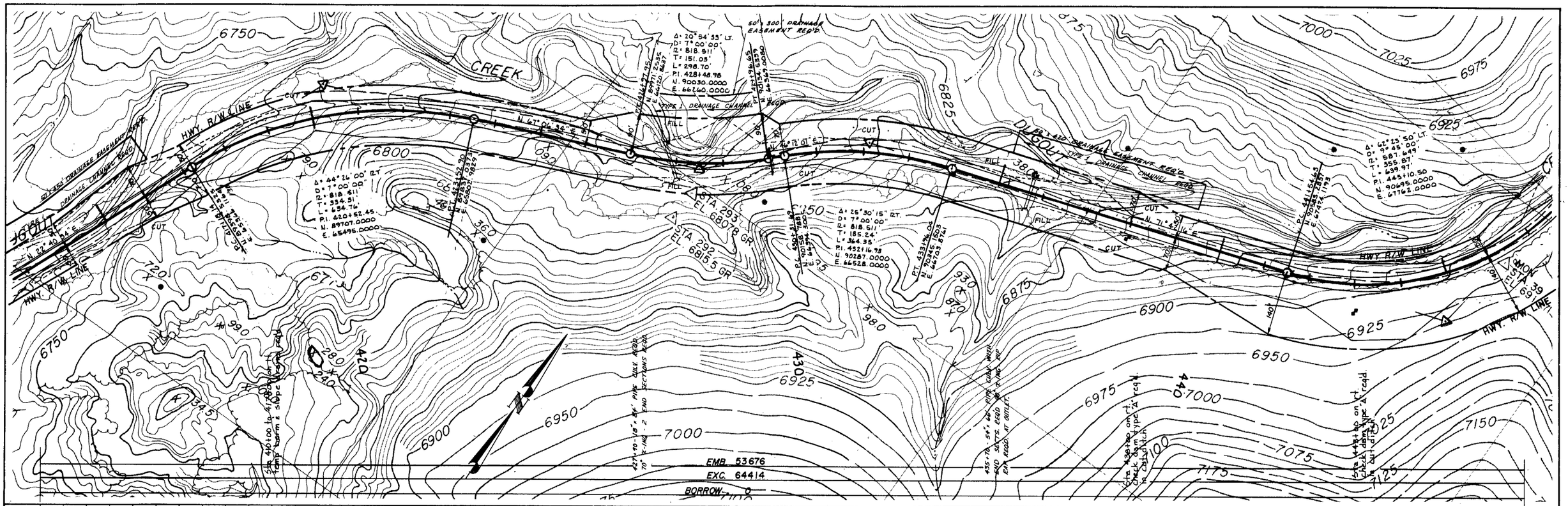

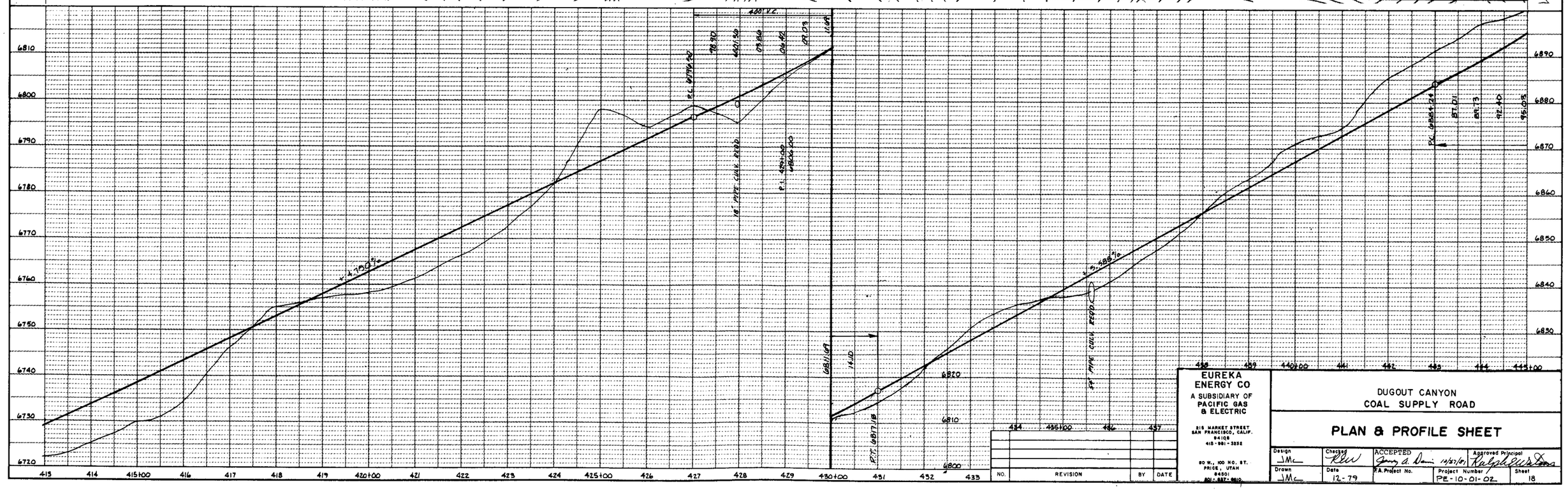

NO.	REVISION	BY	DATE

EUREKA ENERGY CO
A SUBSIDIARY OF
PACIFIC GAS & ELECTRIC
215 MARKET STREET
SAN FRANCISCO, CALIF.
94105
415 - 981 - 3252
80 W., 100 NO. ST.
PRICE, UTAH
84501
801 - 637 - 0610

DUGOUT CANYON
COAL SUPPLY ROAD

PLAN & PROFILE SHEET

Design	Checked	ACCEPTED	Approved Principal
JMc	RLW	Jerry A. Dunn 12/27/79	Ralph L. Wilson
Drawn	**Date**	**F.A. Project No.**	**Project Number / Sheet**
JMc	12-79		PE-10-01-02 / 18

PLAN — SURVEYED, PLOTTED, NOTE BOOK, No., DRAWN, CHECKED, R/W SURV. CHECKED, BY, ISSUE

PROFILE — SURVEYED, PLOTTED, NOTE BOOK, No., GRADE CHECKED, R. & L. NOTES, STRUCTURE DESIGNATIONS CHECKED, BY, ISSUE

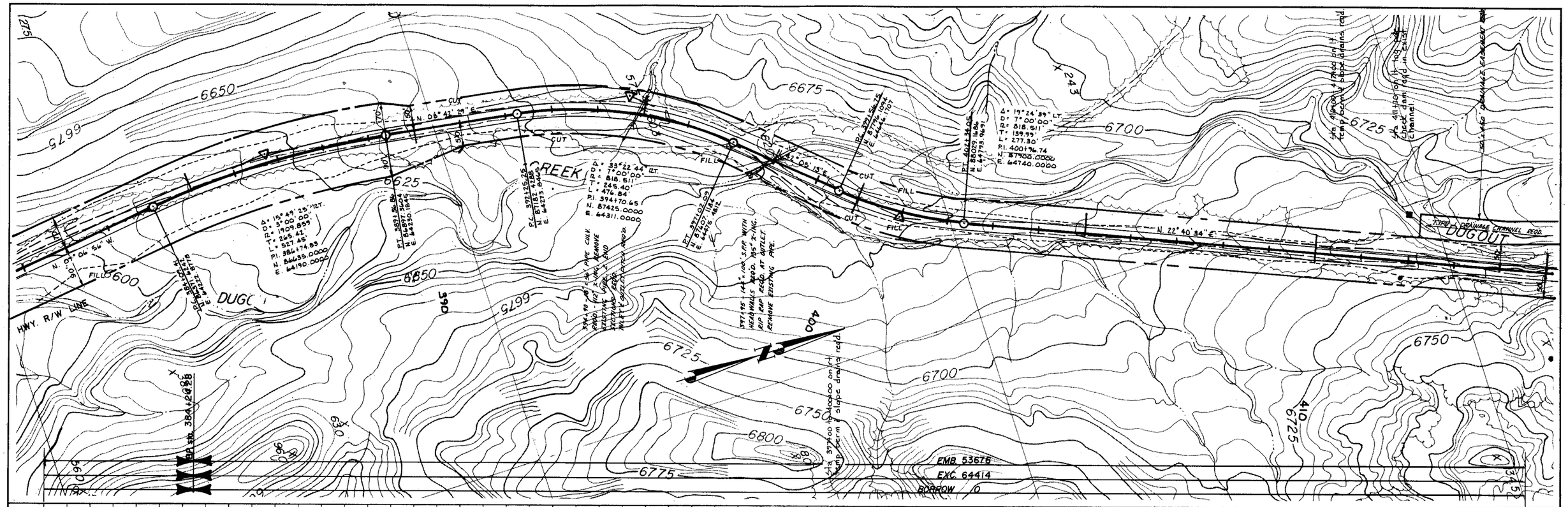

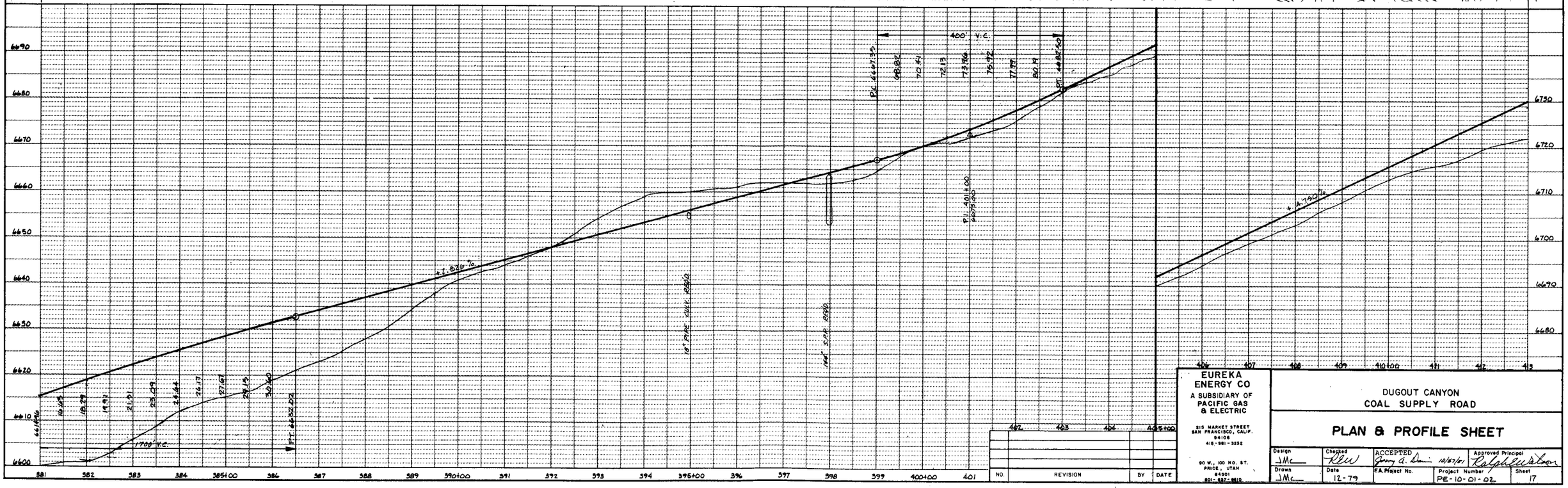

NO.	REVISION	BY	DATE

EUREKA ENERGY CO
A SUBSIDIARY OF PACIFIC GAS & ELECTRIC
315 MARKET STREET
SAN FRANCISCO, CALIF. 94106
415-981-3332

90 W., 100 NO. ST.
PRICE, UTAH 84501
801-637-8810

DUGOUT CANYON
COAL SUPPLY ROAD

PLAN & PROFILE SHEET

Design	Checked	ACCEPTED	Approved Principal
JMc	KLW	Jerry A. Dunn 10/30/81	Ralph E. Wilson
Drawn	**Date**	**F.A. Project No.**	**Project Number** / **Sheet**
JMc	12-79		PE-10-01-02 / 17

PLAN
NOTE BOOK
No.
SURVEYED:
PLOTTED:
DESIGN CHECKED:
R.W. CHECKED:
STRUCTURE ROTATIONS CHECKED:

PROFILE
NOTE BOOK
No.

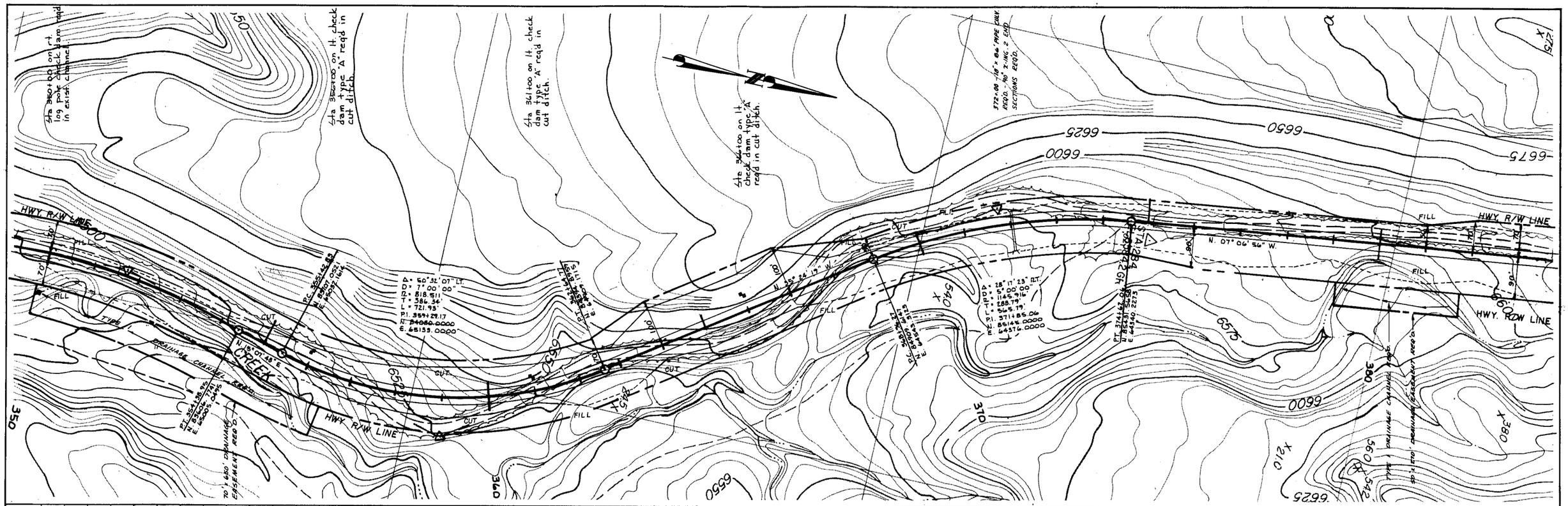

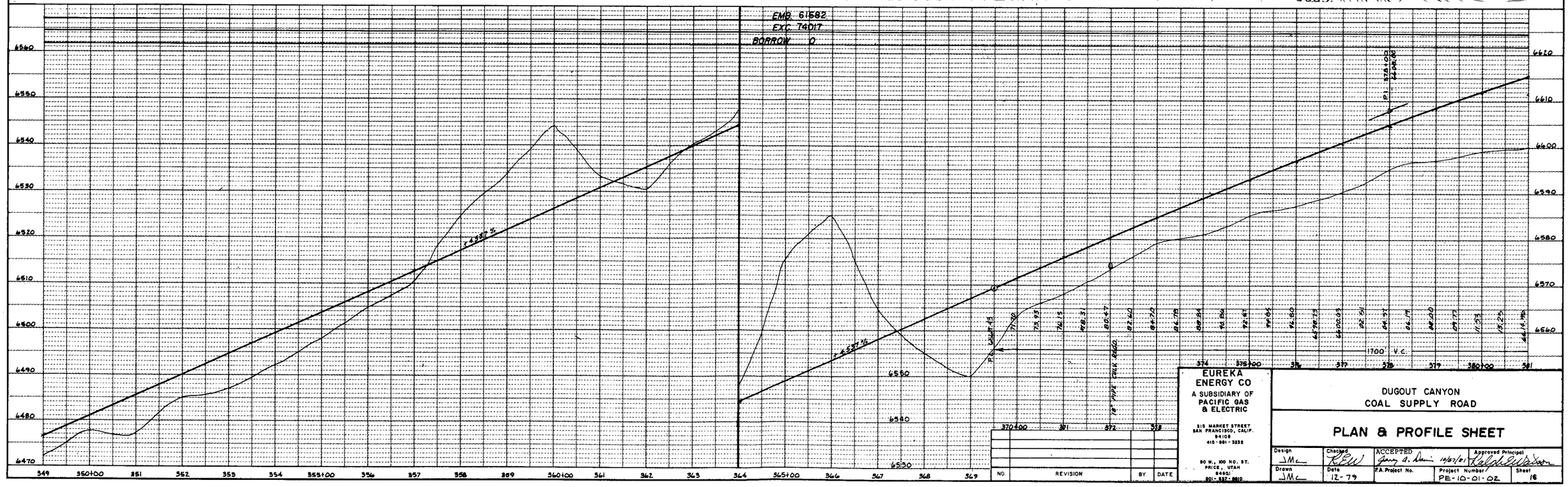

NO.	REVISION	BY	DATE

EUREKA ENERGY CO
A SUBSIDIARY OF PACIFIC GAS & ELECTRIC
215 MARKET STREET
SAN FRANCISCO, CALIF. 94106
415-981-3232
90 W. 100 NO. ST.
PRICE, UTAH 84501
801-637-8810

DUGOUT CANYON
COAL SUPPLY ROAD

PLAN & PROFILE SHEET

Design	Checked	ACCEPTED	Approved Principal
JMc	RBW	Gary A. Mann 10/27/81	Ralph Wilson
Drawn	Date	F.A. Project No.	Project Number / Sheet
JMc	12-79		PE-10-01-02 / 16

PLAN
NOTE BOOK No.
SURVEYED
PLOTTED
GRADE CHECKED
R.P. CHECKED
STRUCTURE LOCATIONS CHECKED
BY
DATE

PROFILE
NOTE BOOK No.
SURVEYED
PLOTTED
GRADE CHECKED
R.P. CHECKED
STRUCTURE LOCATIONS CHECKED
BY
DATE

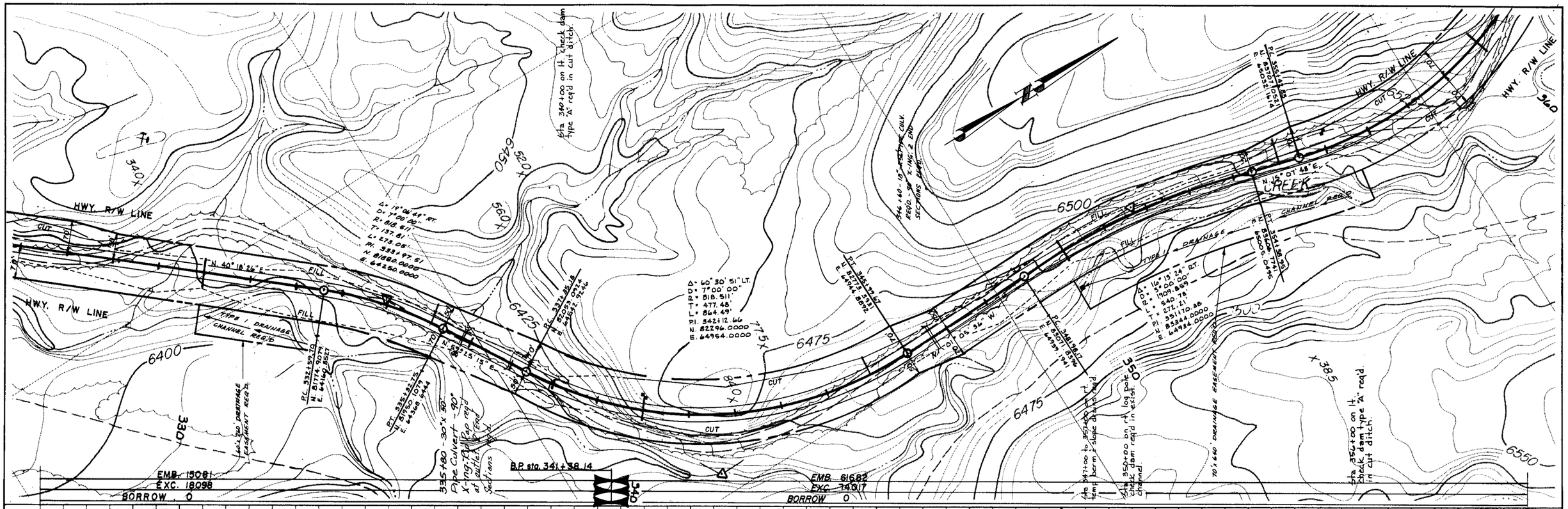

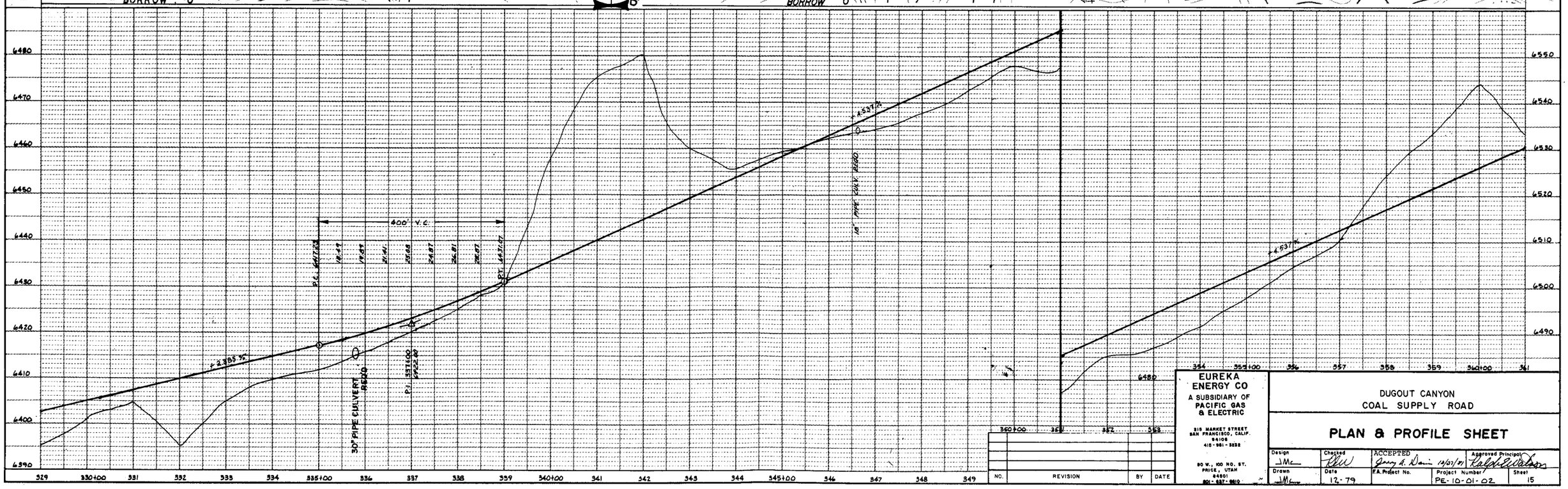

NO.	REVISION	BY	DATE

EUREKA ENERGY CO
A SUBSIDIARY OF
PACIFIC GAS & ELECTRIC
818 MARKET STREET
SAN FRANCISCO, CALIF.
94106
415-981-3838
80 W., 100 NO. ST.
PRICE, UTAH
84501
801-637-8610

DUGOUT CANYON
COAL SUPPLY ROAD

PLAN & PROFILE SHEET

Design	Checked	ACCEPTED	Approved Principal
JMc	RLW	Jerry A. Davis 12/21/79	Ralph E. Walters
Drawn	Date	F.A. Project No.	Project Number / Sheet
JMc	12-79		PE-10-01-02 / 15

PLAN
SURVEYED
PLOTTED
NOTE BOOK
No.
DRAWN
CHECKED
R/W CHECKED

PROFILE
SURVEYED
PLOTTED
NOTE BOOK
No.
GRADES CHECKED
B. & N.'s NOTED
STRUCTURE DIMENSIONS CHECKED

BY
DATE

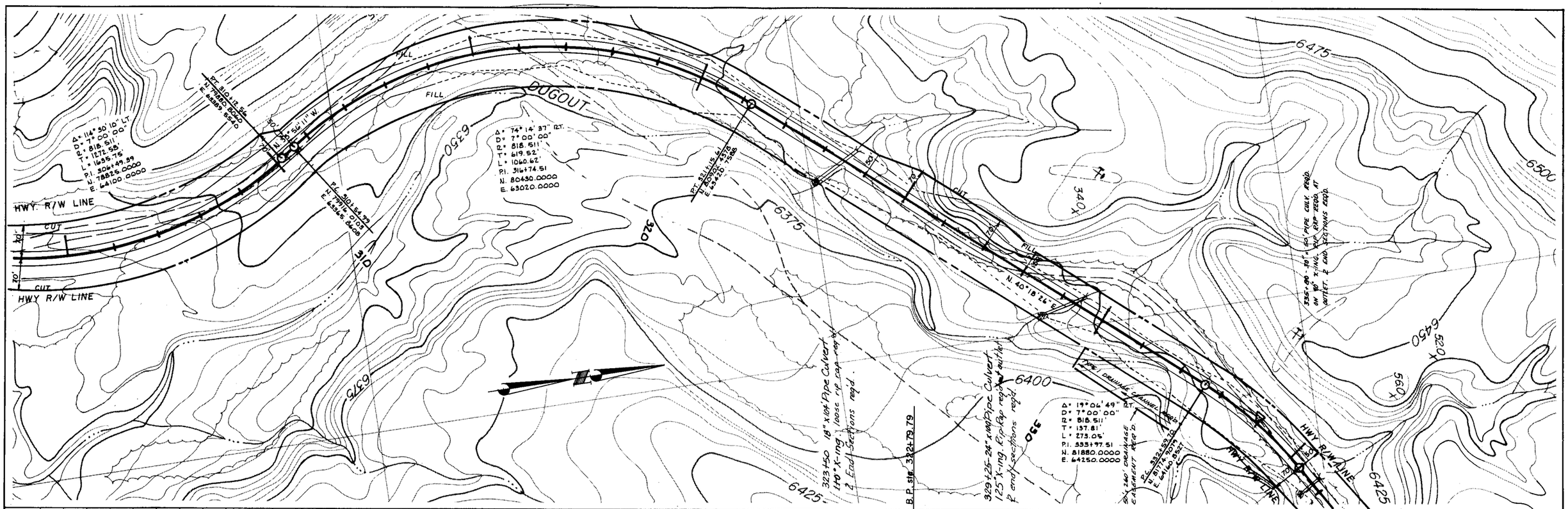

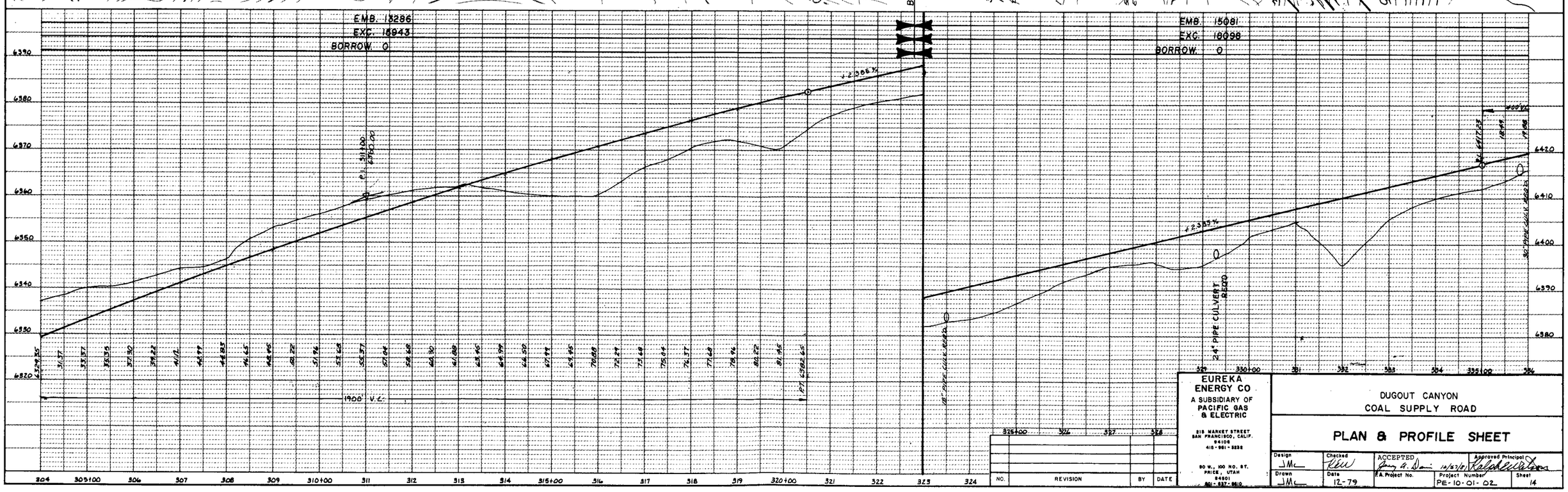

NO.	REVISION	BY	DATE

EUREKA ENERGY CO
A SUBSIDIARY OF PACIFIC GAS & ELECTRIC
215 MARKET STREET
SAN FRANCISCO, CALIF. 94106
415 - 981 - 8222
90 W., 100 NO. ST.
PRICE, UTAH 84501
801 - 637 - 8610

DUGOUT CANYON
COAL SUPPLY ROAD

PLAN & PROFILE SHEET

Design	Checked	ACCEPTED	Approved Principal
JMc	RLW	Gary A. Dan 10/27/81	Ralph E. Watson
Drawn	Date	E.A. Project No.	Project Number / Sheet
JMc	12-79		PE-10-01-02 / 14

PLAN
DRAWN BY
PLOTTED
NOTE BOOK
No.
DATE
BY

PROFILE
SURVEYED
PLOTTED
DRAWN BY
NOTE BOOK
No.
STRUCTURE NOTATIONS CHECKED

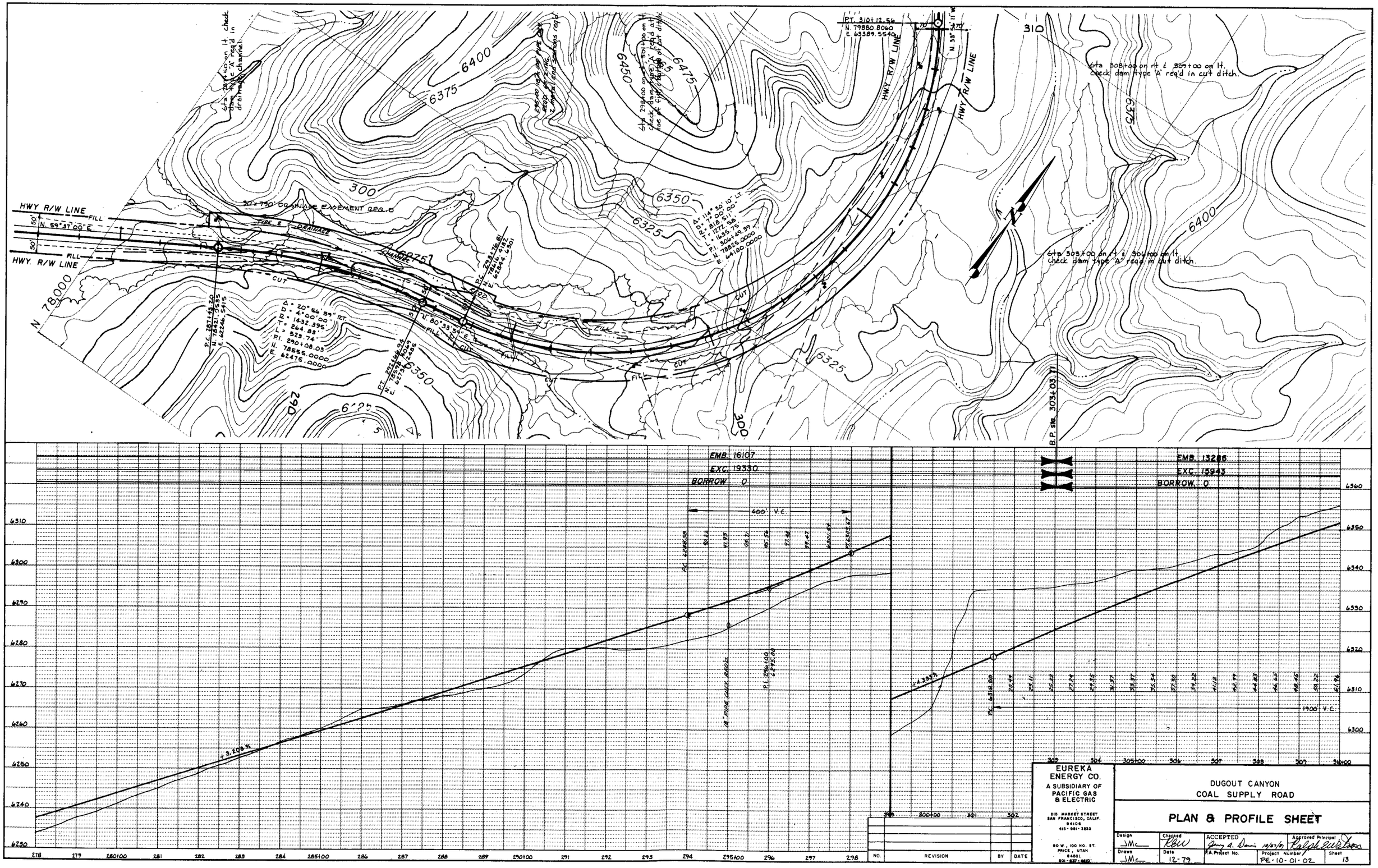
HWY R/W LINE
FILL
N. 59°37'00" E
HWY. R/W LINE
CUT
N. 80°33'54" E
30'x750' DRAINAGE EASEMENT REQ'D
SIDE DRAINAGE
Sta 298+50 on lt check dam type 'A' req'd in drainage channel.
Sta 298+00 on rt & 301+00 on lt check dam type 'A' req'd in cut ditch.
Sta 308+00 on rt & 309+00 on lt check dam type 'A' req'd in cut ditch.
Sta 303+00 on rt & 304+00 on lt check dam type 'A' req'd in cut ditch.
P.T. 3101+12.56
N. 79880.8060
E. 63389.5540
N. 33°54'11" W
P.C. 2971+43.20
N. 78421.0535
E. 62246.5415
Δ = 20°56'59" RT
D = 4°00'00"
R = 1432.395'
T = 264.82'
L = 523.74'
P.I. 290+08.03
N. 78555.0000
E. 62475.0000
P.T. 2921+66.24
N. 78598.8045
E. 62336.2485
P.C. 2833+76.81
N. 78616.4982
E. 62844.4501
Δ = 116°30'10" LT
D = 7°00'00"
R = 818.511'
T = 1272.58'
L = 1635.75'
P.I. 3061+49.39
N. 78825.0000
E. 64100.0000
B.P. Sta. 303+03.71
EMB. 16107
EXC. 19330
BORROW 0
400' V.C.
P.C. 2968+59
P.I. 2996+00
6295.00
14' PAVED WIDTH
+3.296%
EMB. 13286
EXC. 15943
BORROW 0
P.C. 6+18.83
+4.339%
1900' V.C.
EUREKA ENERGY CO.
A SUBSIDIARY OF PACIFIC GAS & ELECTRIC
315 MARKET STREET
SAN FRANCISCO, CALIF.
94106
415-981-3892
90 W. 100 NO. ST.
PRICE, UTAH
84501
801-637-2510
NO. REVISION BY DATE
DUGOUT CANYON
COAL SUPPLY ROAD
PLAN & PROFILE SHEET
Design JMc
Checked RBW
Drawn JMc
Date 12-79
ACCEPTED
F.A. Project No.
Approved Principal
Project Number PE-10-01-02
Sheet 13
PLAN
NOTE BOOK
No.
PROFILE
NOTE BOOK
No.

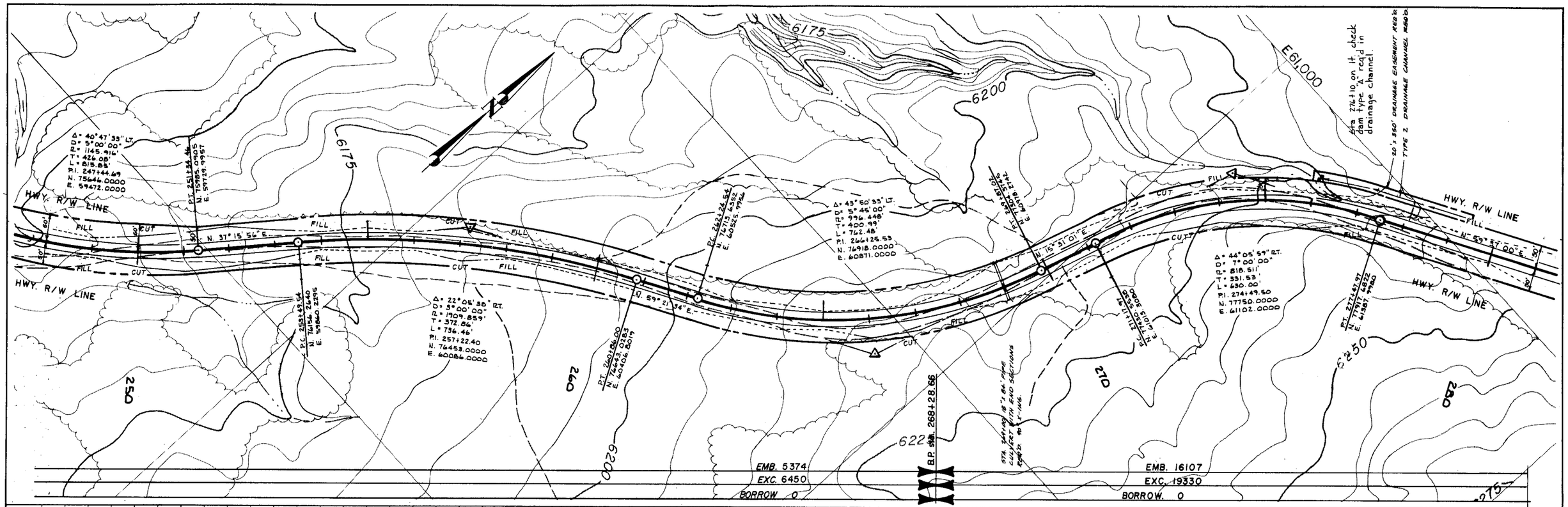

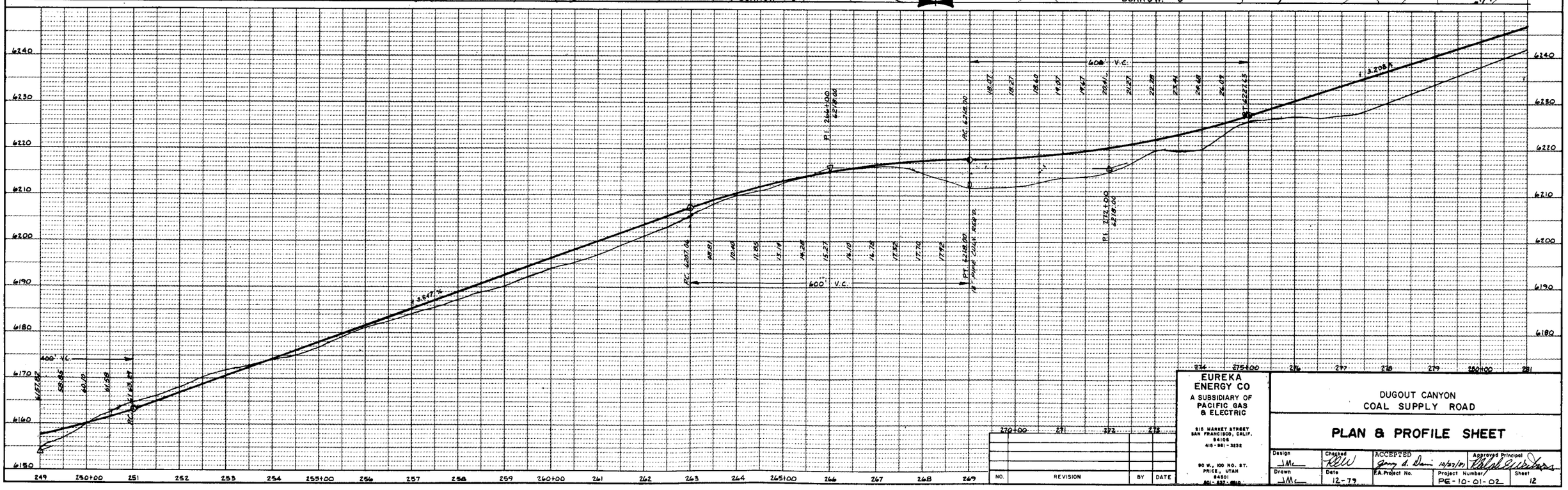

NO.	REVISION	BY	DATE

EUREKA ENERGY CO
A SUBSIDIARY OF
PACIFIC GAS & ELECTRIC
815 MARKET STREET
SAN FRANCISCO, CALIF.
94106
415-981-3232
90 W., 100 NO. ST.
PRICE, UTAH
84501
801-637-8510

DUGOUT CANYON
COAL SUPPLY ROAD

PLAN & PROFILE SHEET

Design	Checked	ACCEPTED	Approved Principal
JMc	KEW	Gerry D. Dunn 10/22/79	Ralph Gibbons
Drawn	Date	F.A. Project No.	Project Number / Sheet
JMc	12-79		PE-10-01-02 / 12

PLAN
SURVEYED
PLOTTED
DESIGN CHECKED
R. W. NOTED
STRUCTURE NOTATIONS CHECKED
NOTE BOOK
No.
DATE
BY

PROFILE
SURVEYED
PLOTTED
DESIGN CHECKED
R. W. NOTED
STRUCTURE NOTATIONS CHECKED
NOTE BOOK
No.
DATE
BY

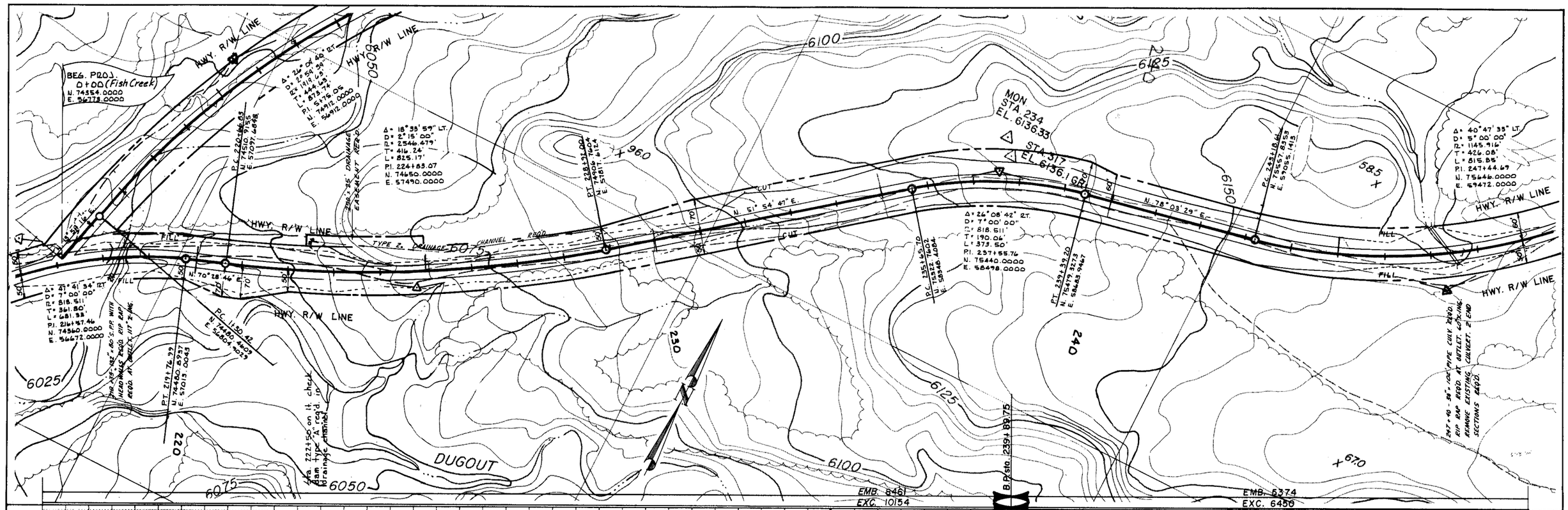

NO.	REVISION	BY	DATE

EUREKA ENERGY CO
A SUBSIDIARY OF PACIFIC GAS & ELECTRIC
215 MARKET STREET
SAN FRANCISCO, CALIF.
94106
415-981-3232

90 W., 100 NO. ST.
PRICE, UTAH
84501
801-637-8810

DUGOUT CANYON
COAL SUPPLY ROAD

PLAN & PROFILE SHEET

Design	Checked	ACCEPTED	Approved Principal
JMc	RLW	Jerry A. Davis 10/27/81	Ralph Wilkins
Drawn	Date	F.A. Project No.	Project Number / Sheet
JMc	12-79		PE-10-01-02 / 11

PLAN
SURVEYED
PLOTTED
NOTE BOOK
No.
REVISION
BY
DATE

PROFILE
SURVEYED
PLOTTED
GRADES CHECKED
B.M. VERIFIED
STRUCTURE LOCATIONS CHECKED
NOTE BOOK
No.
REVISION
BY
DATE

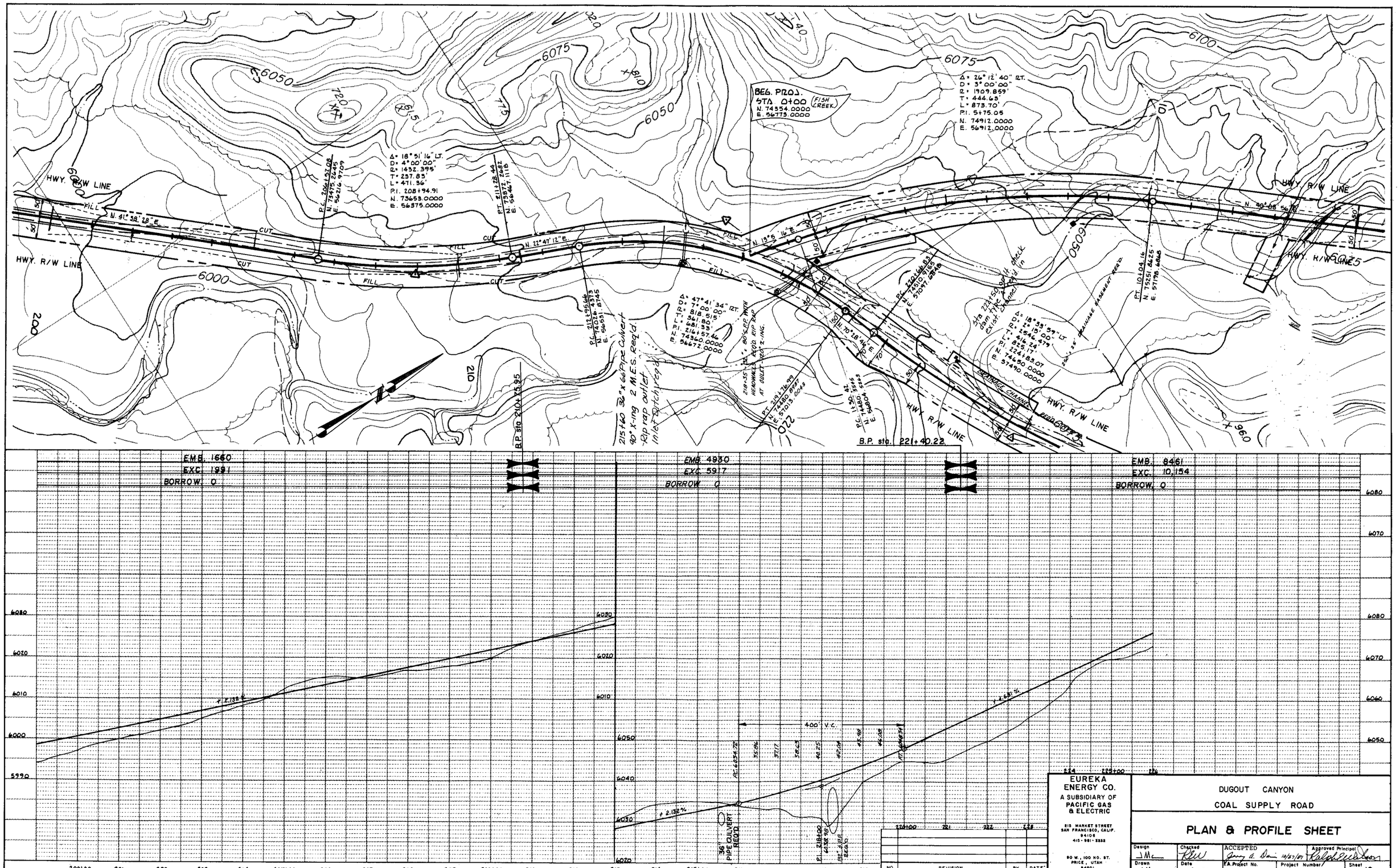

NO.	REVISION	BY	DATE

EUREKA ENERGY CO.
A SUBSIDIARY OF
PACIFIC GAS & ELECTRIC
215 MARKET STREET
SAN FRANCISCO, CALIF.
94106
415 - 981 - 2552
90 W. 100 NO. ST.
PRICE, UTAH
84501
801 - 637 - 8810

DUGOUT CANYON
COAL SUPPLY ROAD

PLAN & PROFILE SHEET

Design	Checked	ACCEPTED	Approved Principal
JMc	RLW	Gary A. Dan 11/23/80	Ralph L. Wilson
Drawn	Date	F.A. Project No.	Project Number / Sheet
JMc	12-79		PE-10-01-02 / 10

PLAN — SHEETED, PLOTTED, GRADES CHECKED, R. & L. NOTED, STRUCTURE DIMENSIONS CHECKED — NOTE BOOK No. — BY — DATE

PROFILE — SHEETED, PLOTTED, GRADES CHECKED, R. & L. NOTED, STRUCTURE DIMENSIONS CHECKED — NOTE BOOK No. — BY — DATE

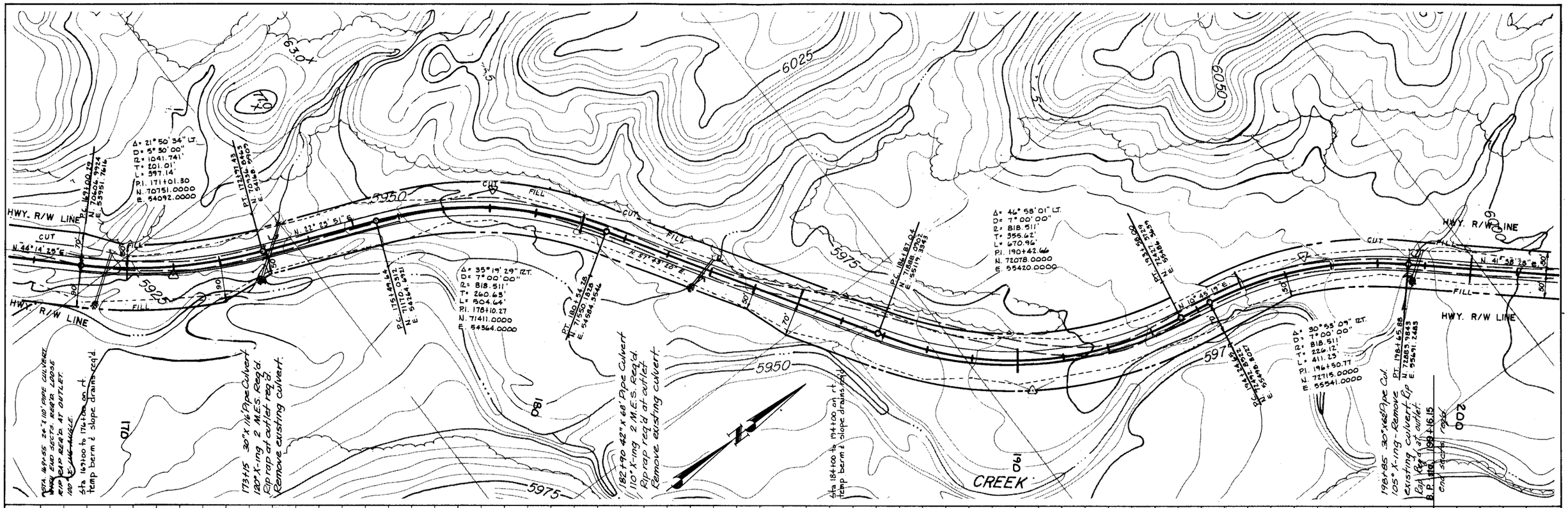

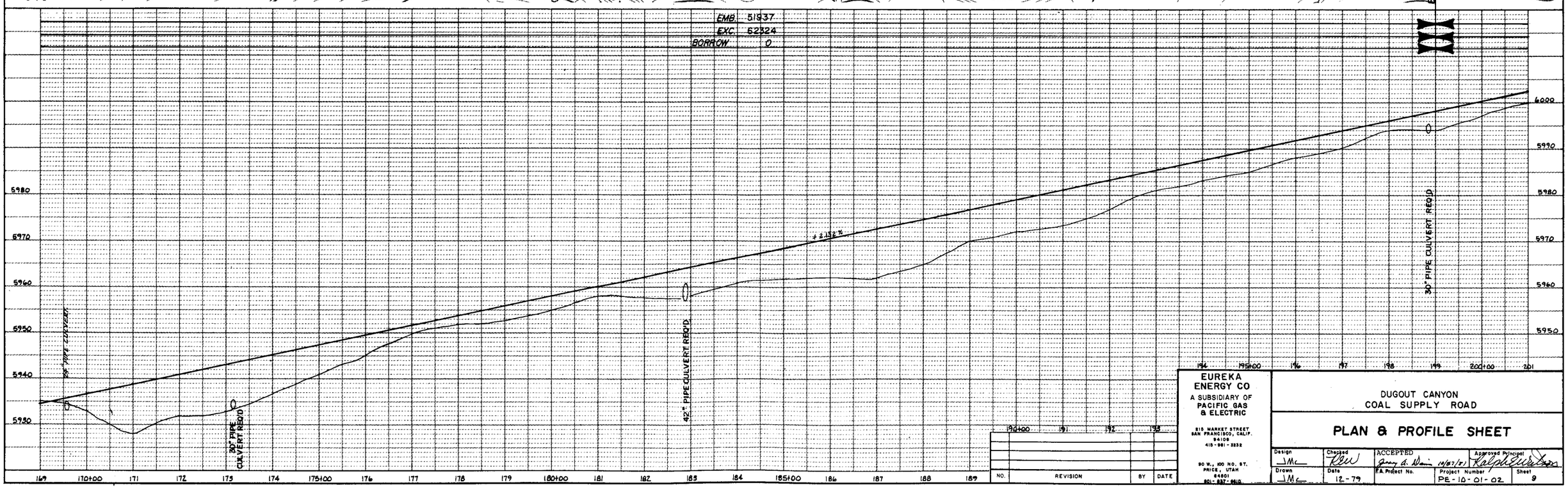

NO.	REVISION	BY	DATE

EUREKA ENERGY CO
A SUBSIDIARY OF PACIFIC GAS & ELECTRIC
815 MARKET STREET
SAN FRANCISCO, CALIF. 94106
415-981-3232
90 W., 100 NO. ST.
PRICE, UTAH 84501
801-637-9610

DUGOUT CANYON
COAL SUPPLY ROAD

PLAN & PROFILE SHEET

Design	Checked	ACCEPTED	Approved Principal
JMC	RGW	Gary A. Dorius 11/07/01	Ralph E. Watson
Drawn	Date	E.A. Project No.	Project Number / Sheet
JMC	12-79		PE-10-01-02 / 9

PLAN
SURVEYED
PLOTTED
NOTE BOOK
NO.
ALIGNMENT CHECKED
RE. OF WAY CHECKED

PROFILE
SURVEYED
PLOTTED
NOTE BOOK
NO.
GRADES CHECKED
X, M.'s NOTED
STRUCTURE EXCAVATIONS CHECKED

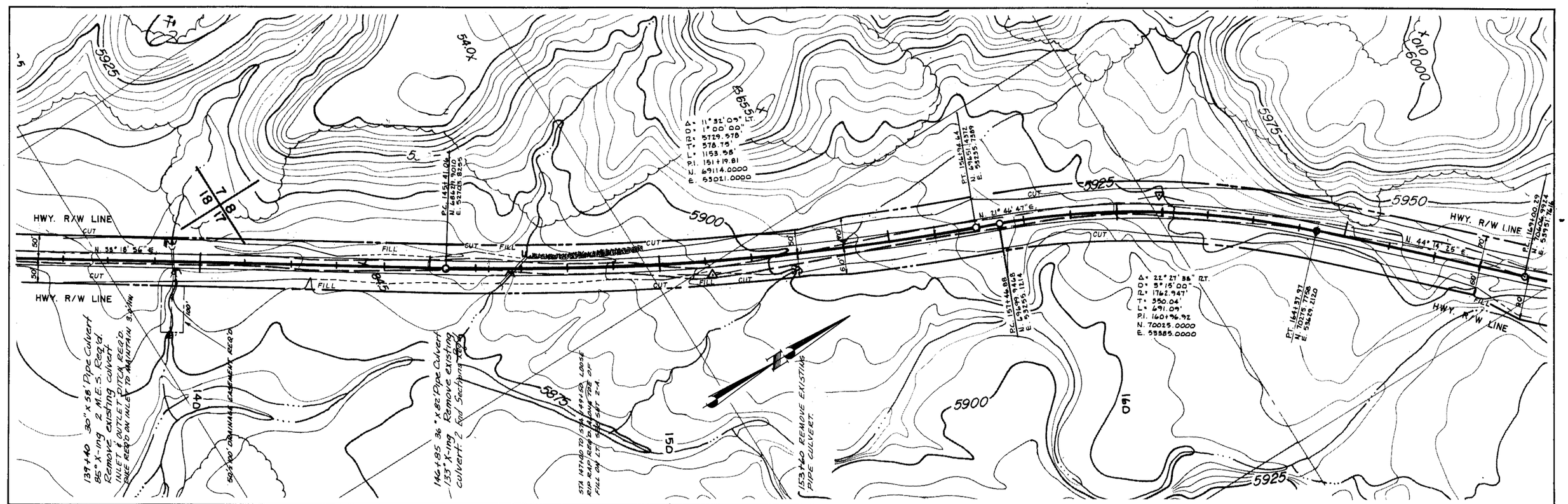

NO.	REVISION	BY	DATE

EUREKA ENERGY CO.
A SUBSIDIARY OF
PACIFIC GAS & ELECTRIC
215 MARKET STREET
SAN FRANCISCO, CALIF.
94105
415-981-3332
90 W. 100 NO. ST.
PRICE, UTAH
84501
801-637-8810

DUGOUT CANYON
COAL SUPPLY ROAD

PLAN & PROFILE SHEET

Design	Checked	ACCEPTED	Approved Principal
JML	RLW	Gary A. Davis 12/27/79	Ralph Erickson
Drawn	Date	F.A. Project No.	Project Number / Sheet
JML	12-79		PE-10-01-02 / 8

PLAN
NOTE BOOK
No.
SURVEYED
PLOTTED
DRAWN
ALIGNMENT CHECKED
R/W CHECKED
BY
DATE

PROFILE
NOTE BOOK
No.
SURVEYED
PLOTTED
DRAWN
GRADES CHECKED
R. & V. NOTED
STRUCTURE NOTATIONS CHECKED
BY
DATE

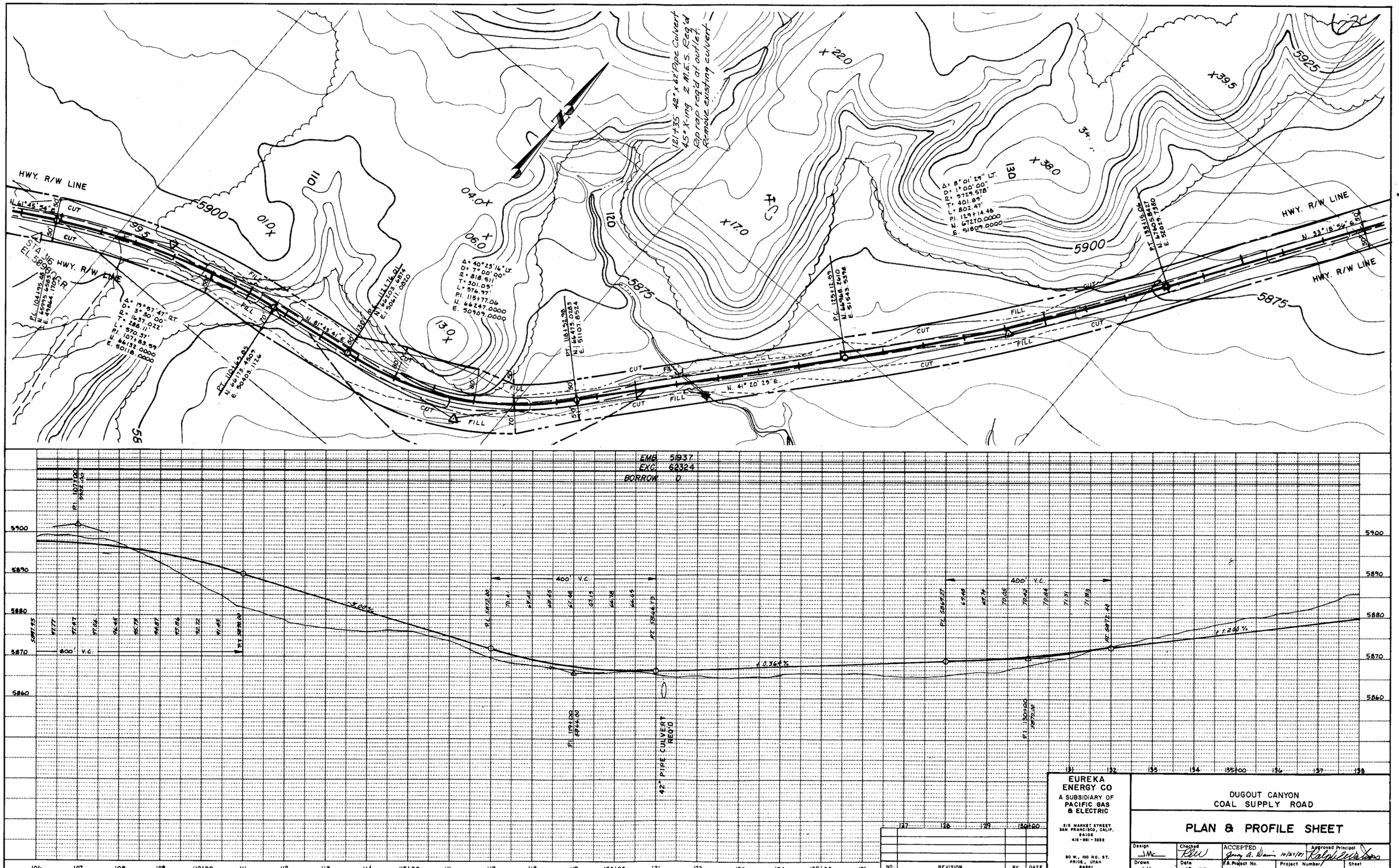

NO.	REVISION	BY	DATE

EUREKA ENERGY CO
A SUBSIDIARY OF
PACIFIC GAS & ELECTRIC

215 MARKET STREET
SAN FRANCISCO, CALIF.
94105
415-981-3232

90 W., 100 NO. ST.
PRICE, UTAH
84501
801-637-8810

DUGOUT CANYON
COAL SUPPLY ROAD

PLAN & PROFILE SHEET

Design	Checked	ACCEPTED	Approved Principal
JMc	RLW	Gary A. Davis 10/27/81	Ralph Watkins
Drawn	**Date**	**F.A. Project No.**	**Project Number** / **Sheet**
JMc	12-79		PE-10-01-02 / 7

PLAN — SURVEYED, DRAWN, NOTE BOOK, ASSISTANT CHIEFTAIN, No., RE. OF WAY CHECKER, DATE, BY

PROFILE — SURVEYED, DRAWN, NOTE BOOK, GRADES CHECKED, No., STRUCTURE LOCATIONS CHECKED, DATE, BY

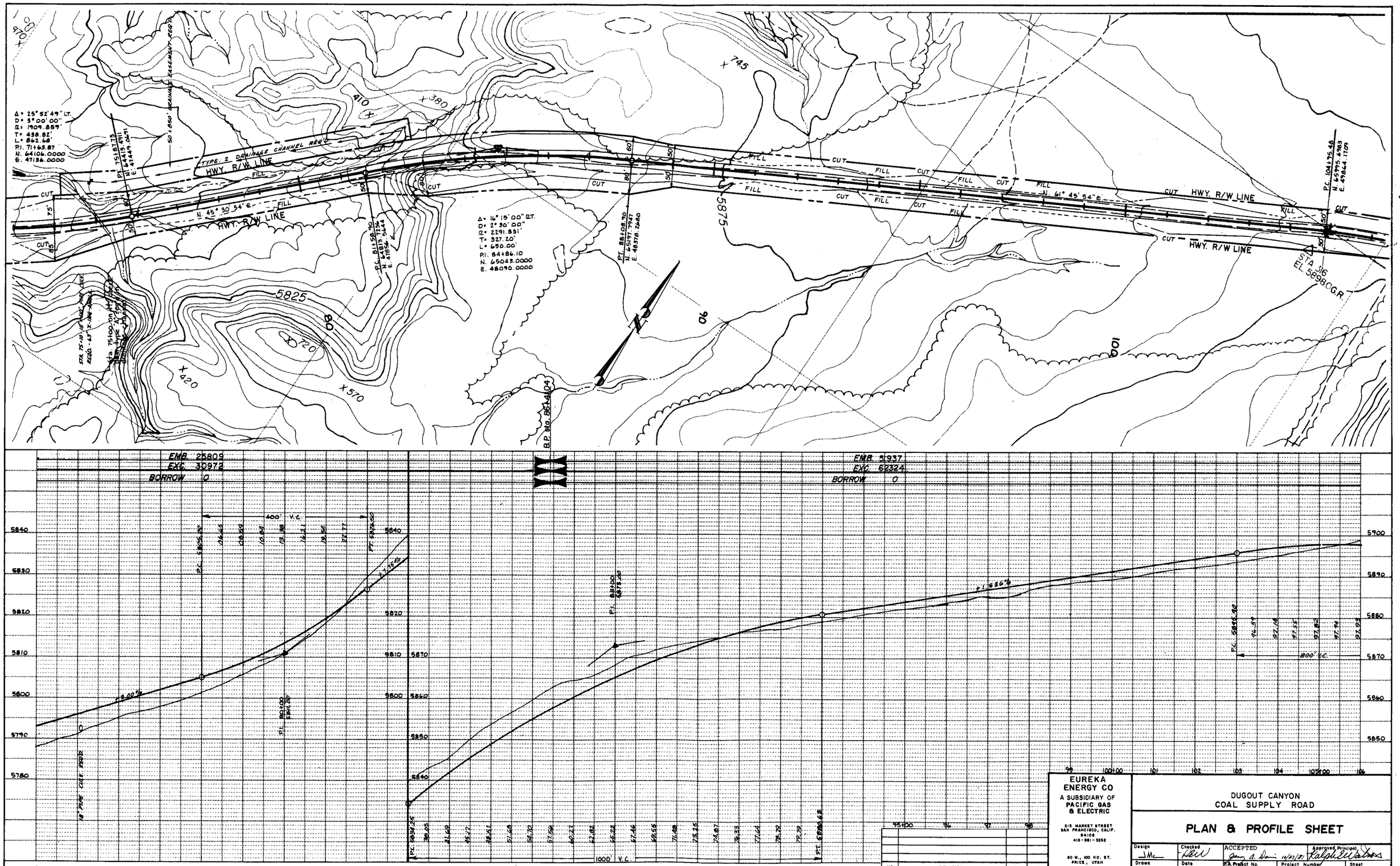
Δ = 25° 52' 49" LT.
D = 5° 00' 00"
R = 1909.859'
T = 438.82'
L = 862.68'
P.I. 71+63.87
N. 64106.0000
E. 47156.0000
P.T. 75+18.73
N. 64415.0491
E. 47449.0491
50' x 850' DRAINAGE EASEMENT REQ'D.
TYPE: 2 DRAINAGE CHANNEL REQ'D.
HWY. R/W LINE
N. 45° 30' 54" E.
Δ = 16° 15' 00" RT.
D = 2° 30' 00"
R = 2291.831'
T = 327.20'
L = 650.00'
P.I. 84+86.10
N. 65043.0000
E. 48090.0000
P.C. 81+58.90
N. 64813.7124
E. 47856.2444
P.T. 88+08.90
N. 65191.7947
E. 48318.2560
N. 61° 45' 54" E.
P.C. 104+75.48
N. 65795.4983
E. 49844.1709
STA. 75+00 ON HWY. 10
REQ'D. 48" x 144' PIPE CULVERT
B.P. 910 86+04
STA. 116
EL. 5898 G.R.
EMB. 25809
EXC. 30972
BORROW 0
EMB. 5937
EXC. 62324
BORROW 0
400' V.C.
1000' V.C.
800' V.C.
+9.00%
+15.00%
+16.26%
P.C. 5852.00
P.T. 5872.50
P.I. 80+00 5841.00
P.I. 88+00 5875.00
P.C. 5852.25
P.T. 5896.68
P.C. 5845.50
48" PIPE CULV. EXIST.
EUREKA ENERGY CO
A SUBSIDIARY OF PACIFIC GAS & ELECTRIC
215 MARKET STREET
SAN FRANCISCO, CALIF. 94106
415-981-3252
90 W., 100 NO. ST.
PRICE, UTAH 84501
801-637-9810
DUGOUT CANYON
COAL SUPPLY ROAD
PLAN & PROFILE SHEET
Design JMc
Drawn JMc
Checked
Date 12-79
ACCEPTED
Approved Principal
F.A. Project No.
Project Number PE-10-01-02
Sheet 6
NO. REVISION BY DATE
PLAN
NOTE BOOK
PROFILE
NOTE BOOK

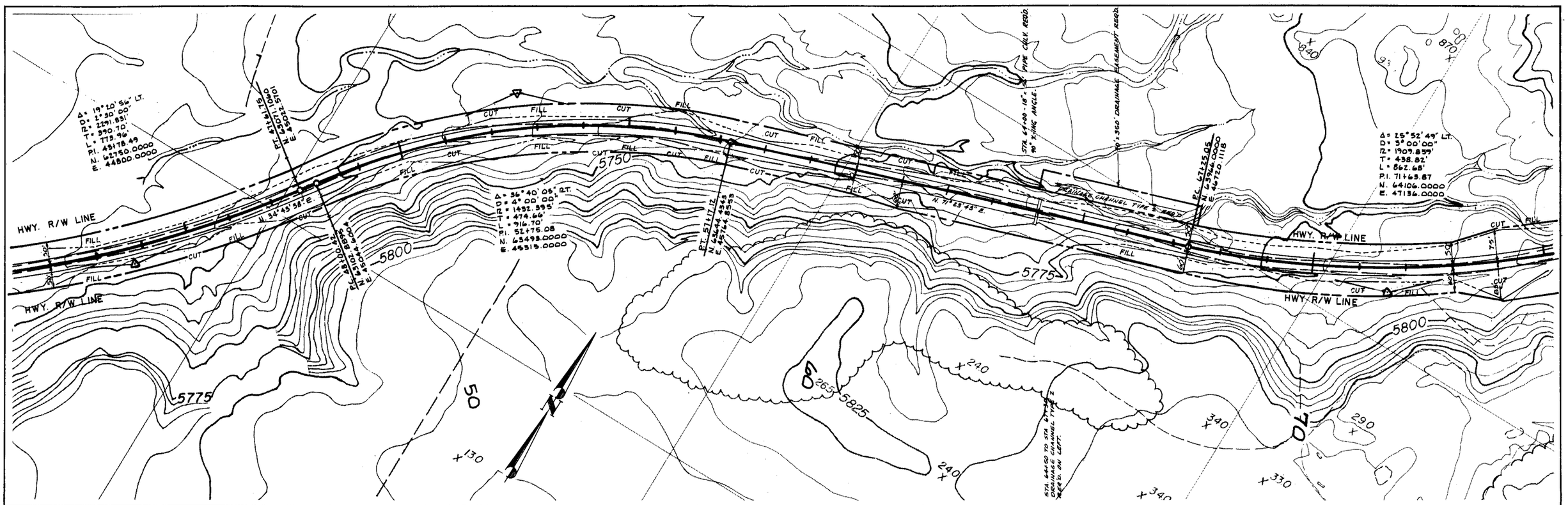

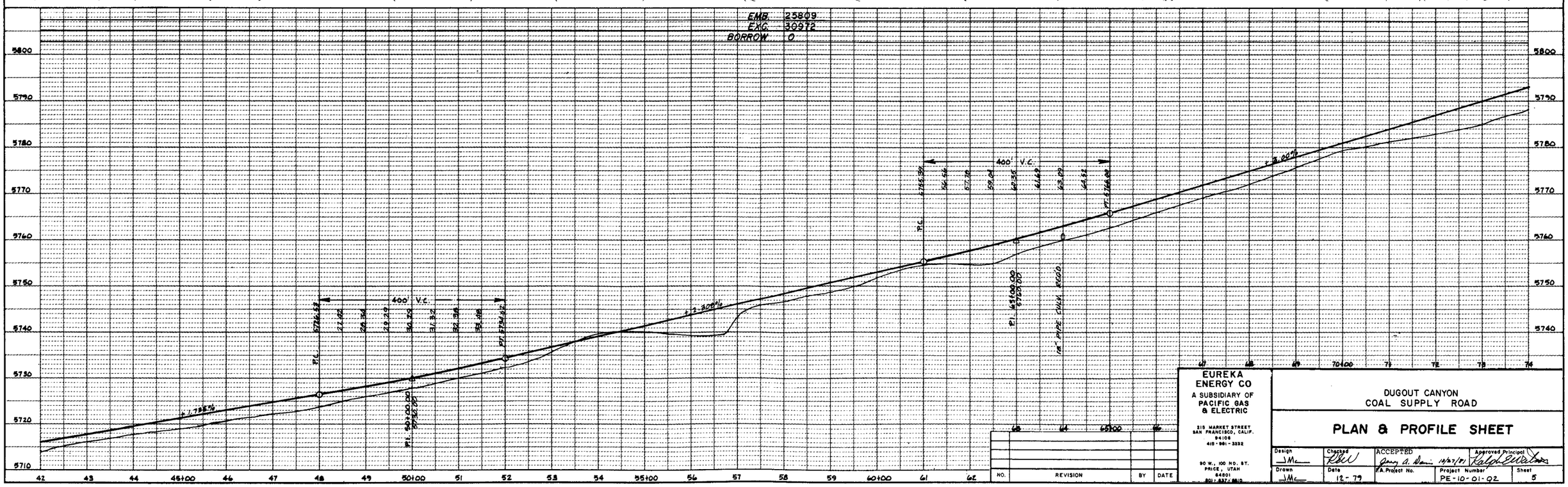

NO.	REVISION	BY	DATE

EUREKA ENERGY CO
A SUBSIDIARY OF PACIFIC GAS & ELECTRIC
215 MARKET STREET
SAN FRANCISCO, CALIF. 94106
415-981-3232
90 W., 100 NO. ST.
PRICE, UTAH 84501
801-637-5810

DUGOUT CANYON
COAL SUPPLY ROAD

PLAN & PROFILE SHEET

Design	Checked	ACCEPTED	Approved Principal
JMc	RBW	Jerry A. Dennis 12/27/79	Ralph E. Watson
Drawn	**Date**	**F.A. Project No.**	**Project Number** / **Sheet**
JMc	12-79		PE-10-01-02 / 5

PLAN
SURVEYED
PLOTTED
DESIGN CHECKED
R.O.W. VERIFIED
STRUCTURE LOCATIONS CHECKED
NOTE BOOK
No.
DATE
BY

PROFILE
SURVEYED
PLOTTED
DESIGN CHECKED
R.O.W. VERIFIED
STRUCTURE LOCATIONS CHECKED
NOTE BOOK
No.
DATE
BY

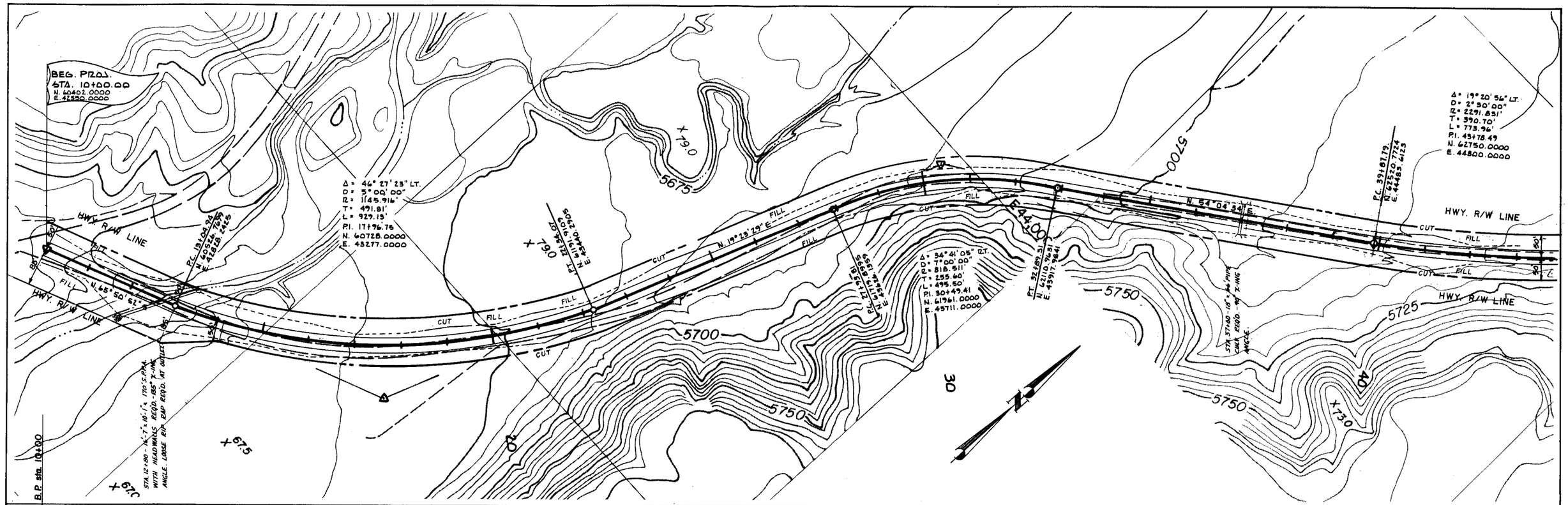

NO.	REVISION	BY	DATE

EUREKA ENERGY CO.
A SUBSIDIARY OF PACIFIC GAS & ELECTRIC
215 MARKET STREET
SAN FRANCISCO, CALIF.
94106
415-981-3232
90 W. 100 NO. ST.
PRICE, UTAH
84501
801-637-6810

DUGOUT CANYON
COAL SUPPLY ROAD

PLAN & PROFILE SHEET

Design	Checked	ACCEPTED	Approved Principal
JMc	KEW	Gerry A. Sim 12/27/71	Ralph Walton
Drawn	Date	F.A. Project No.	Project Number / Sheet
JMc	12-79		PE-10-01-02 / 4

PLAN
NOTE BOOK
No.
DRAWN
PLOTTED
PLANS CHECKED
R. OF WAY CHECKED

PROFILE
NOTE BOOK
No.
DRAWN
PLOTTED
PROFILE CHECKED
R. OF W. CHECKED
STRUCTURE NOTATIONS CHECKED

SUMMARY SHEET

RIGHT OF WAY MARKERS

STATION	DIST. LEFT FEET	DIST. RIGHT FEET	RIGHT OF WAY MARKERS EACH	CONSTRUCTION SOURCE REFERENCE
P.C.13+04.94	50	85	2	
14+00.00		50	1	
P.T. 22+34.07	50	50	2	
P.C. 27+93.81	50	50	2	
P.T. 32+89.31	50	50	2	
P.C.39+87.79	50	50	2	
P.T.47+61.75	50	50	2	
P.C.48+00.42	50	50	2	
P.T. 57+17.12	50	50	2	
60+00.0		50	1	
61+00.0		60	1	
P.C. 67+25.05	50	60	2	
73+00.0	50	60	2	
74+00.0	75	85	2	
P.T.75+87.73	60	50	2	
P.C.81+58.90	60	50	2	
83+00.0		80	1	
P.T. 88+08.90	60	80	2	
89+00.0	50	50	1	
97+00.0	50	50	2	
P.C.104+95.48	50	50	2	
109+00.0		50	1	
P.T.110+65.85	50	70	2	
P.C.112+76.01	50	70	2	
114+00.0	80		1	
116+00.0	80		1	
117+00.0	50	70	2	
P.T.118+52.98	50	50	2	
P.C.125+12.59	50	50	2	
P.T 133+15.06	50	50	2	
P.C.145+41.06	50	50	2	
153+00.0	50	50	2	
154+00.0	70	60	2	
P.T.156+94.64	70	60	2	
P.C.157+46.88	70	60	2	
P.T. 164+37.97	70	60	2	
168+00.0		60	1	
P.C.169+00.29	70	90	2	
170+00.0	50		1	
172+00.0		90	1	
P.T.172+97.43	50	50	2	
P.C.175+49.64	50	50	2	
P.T.180+54.28	50	50	2	

STATION	DIST. LEFT FEET	DIST. RIGHT FEET	RIGHT OF WAY MARKERS EACH	CONSTRUCTION SOURCE REFERENCE
184+00.0		50	1	
185+00.0		70	1	
P.C.186+87.04	50	70	2	
P.T.193+58.0	50	70	2	
P.C 194+24.65	50	70	2	
196+00.0		50	1	
P.T.198+65.88	50	50	2	
P.C. 206+57.08	50	50	2	
P.T.211+28.44	50	50	2	
P.C.212+95.66	50	50	2	
P.T.219+76.99	50	50	2	
P.C.220+66.83	50	70	2	
221+00.0		70	1	
222+00.0		50	1	
P.T. 228+92.0	50	50	2	
231+00.0	70		1	
P.C.235+65.20	70	50	2	
P.T.239+39.20	70	50	2	
240+00.0	60		1	
P.C.243+18.61	60	50	2	
P.T.251+34.46	50	50	2	
P.C.253+49.54	50	50	2	
P.T.260+86.0	50	50	2	
P.C.262+24.54	50	50	2	
P.T.269+87.02	50	50	2	
P.C. 271+17.97	50	50	2	
P.T.277+47.97	50	50	2	
P.C.287+43.20	50	50	2	
P.T.292+66.94	50	50	2	
P.T.293+76.81	70	70	2	
P.T. 310+12.56	70	70	2	
P.C.310+54.99	50	70	2	
P.T.321+15.61	50	70	2	
324+00.0	50		1	
325+00.0	70		1	
327+00.0	70		1	
328+00.0	50		1	
P.C.332+59.70	50	70	2	
P.T.335+32.75	50	70	2	
P.C.337+35.18	70	50	2	
P.T.345+99.67	70	50	2	
347+00.0	50	70	2	

STATION	DIST. LEFT FEET	DIST. RIGHT FEET	RIGHT OF WAY MARKERS EACH	CONSTRUCTION SOURCE REFERENCE
P.C.348+98.17	50	70	2	
P.T.354+38.95	50	70	2	
P.C.355+42.83	70	70	2	
P.T.362+64.77	70	70	2	
P.C.368+96.27	50	70	2	
P.T.374+62.06	50	70	2	
376+00.0		90	1	
381+00.0	50		1	
382+00.0	70		1	
P.C. 384+09.41	70	90	2	
P.T 389+36.86	70	90	2	
390+00.0	50		1	
391+00.0		50	1	
P.T.392+25.25	50	50	2	
P.T.397+02.09	50	50	2	
P.C.399+56.75	50	50	2	
P.T.402+34.05	50	50	2	
414+00.0	50		1	
416+00.0	70		1	
P.C.417+18.14	50	70	2	
P.T. 423+52.90	50	70	2	
426+00.0	50		1	
P.C.426+97.95	90	70	2	
P.T.429+96.65	90	70	2	
P.C.430+31.69	70	70	2	
P.T.433+96.04	70	70	2	
438+00.0	70		1	
439+00.0	50	70	2	
P.C.441+54.63	50	140	2	
446+00.0	50		1	
P.T.447+94.60	80	140	2	
P.C. 448+12.44	80	140	2	
P.T.453+76.79	80	140	2	
455+00.0		140	1	
456+00.0		50	1	
468+45.20	80	50	2	
367+00.0	100		1	
364+00.00	100		1	
			210	
TOTAL				
USE TOTAL			215	

GUARDRAIL

FROM STATION	TO STATION	LEFT	RIGHT	BEAM GUARDRAIL LIN. FT.	APPROACH ELEMENT EACH	DOUBLE GUARDRAIL LIN. FT.	CONSTRUCTION SOURCE REFERENCE
351+00	356+00		X	500	2		
368+00	372+00		X	400	2		
379+00	382+00		X	300	2		
413+00	418+00	X		500	2		
427+00	431+00	X		400	2		
447+00	455+00	X		800	2		
TOTAL				2900	12		
USE TOTAL				2900	12		

No.	Revision	By	Date

EUREKA ENERGY CO
A SUBSIDIARY OF PACIFIC GAS & ELECTRIC
215 MARKET STREET SAN FRANCISCO, CALIF. 94106 415-981-3232
90 W. 100 NO. ST. PRICE, UTAH 84501 801-637-6610

DUGOUT CANYON ROAD

SUMMARY SHEET

ACCEPTED 10/27/81 Jerry A. Davis

Designed	Checked	Approved	Date	Sheet
JMc	RBW	R.B. Watson	Oct 5, 1981	3E
Drawn	Date	Scale	Project Number	
LNR	2-5-80	Not to scale	PE 10-01-02	

SUMMARY SHEET

FOR INFORMATION ONLY

NO PASSING AREAS

LANE	FROM STA.	TO STA.	LINEAL FEET
NORTH	10+00	123+00	11,300.00'
NORTH	145+00	468+31.78	32331.28'
SOUTH	10+00	137+00	12700.00'
SOUTH	162+00	468+31.78	30631.78'
	TOTAL		86,963.56'

HIGHWAY TRAFFIC PAINT

FROM STA.	TO STA.	LENGTH	4" SOLID WHITE	4" SOLID YELLOW	4" DASHED YELLOW	PAVEMENT MARKING TAPE	CONSTRUCTION SOURCE REFERENCE
		FEET	325'/GAL.	325'/GAL.	1260'/GAL.	1'/100'	
10+00	468+31.78	45,831.78	282.04	267.58	3.10	458.32	
SUB TOTAL			552.72			458.32	
USE TOTAL			560.00			460	

TEMPORARY EROSION CONTROL

FROM STATION	TO STATION	LEFT	RIGHT	LOG & POLE CHECK DAMS EACH	HAY OR STRAW CHECK DAMS TYPE "A" EACH	TEMP. BERM & SLOPE DRAIN LIN. FT.			REMARKS	CONSTRUCTION SOURCE REFERENCE
75+00		X			1					
169+00	176+00		X			700'				
184+00	194+00		X			1000'				
222+50		X			1					
276+10		X			1					
287+50		X			1					
298+00			X		1					
303+00			X		1					
308+00			X		1					
301+00		X			1					
306+00		X			1					
309+00		X			1					
340+00		X			1					
347+00	357+00		X			1000'				
350+00			X	1						
356+00		X			1					
361+00		X			1					
366+00		X			1					
411+70		X		1						
397+00	400+00		X			300'				
410+00	417+00	X				700'				
438+00			X		1					
443+00			X		1					
448+00			X		1					
447+50		X		1						
452+00		X		1						
457+50		X		1						
TOTAL				5	17	3700				
USE TOTAL				5	18	3700				

No.	Revision	By	Date

EUREKA ENERGY CO.
A SUBSIDIARY OF PACIFIC GAS & ELECTRIC
315 MARKET STREET
SAN FRANCISCO, CALIF.
94105
415-981-5233
90 W., 100 NO. ST.
PRICE, UTAH
84501
801-637-6610

DUGOUT CANYON ROAD

SUMMARY SHEET

ACCEPTED 10/27/81

Designed	Checked	Approved	Date
JMc	RLW	Ralph E. Wilson	Oct. 5, 1981
Drawn	Date	Scale	Project Number
LNR	2-5-80	Not to scale	PE 10-01-02

Sheet 3 D

SUMMARY SHEET

DRAINAGE

STATION	X-ING ANGLE	HEIGHT OF COVER	PIPE CULVERT 18" (LINEAR FEET)	24"	30"	36"	42"		60"	"	96"	METAL END SECTION 18" (EACH)	24"	30"	36"	42"		54"	HEADWALL 16'-7"x10'-1" S.P.P.A. (EACH)	HEADWALL 132" S.P.P. (EACH)	HEADWALL 144" S.P.P. (EACH)	16'-7"x10'-1" STR PLATE PIPE (LN.FT.)	132" STR. PLATE PIPE (LN.FT.)	144" STR. PLATE PIPE (LN.FT.)	LOOSE RIP RAP (CU.YD.)	SURFACE DITCH (LN.FT.)	DRAINAGE CHANNEL (CU.YD.)	SMALL DITCH EXCAVATION (CU.YD.)	REMARKS	CONSTRUCTION SOURCE REFERENCE
427+25 to 429+50																										533.33		TYPE I	
435+25 To 439+25																										948.15		TYPE I	
447+25 To 450+00																										651.85		TYPE I	
452+00 To 454+75																										651.85		TYPE I	
457+50 To 461+00																										829.63		TYPE I	
147+00 To 149+50																								56				REQ'D IN CUT DITCH ON LEFT	
SHEET TOTAL																								56		3614.81			
TOTAL			810	210	388	148	130		66			14	4	10	4	4	0	2	2	4	2	170	180	100	949.6		8698.87	175		
USE TOTAL			810	210	388	148	130		66			14	4	10	4	4	0	2	2	4	2	170	180	100	950		8700	200		

FENCING & GATE

FROM STATION	DIST. OUT (FEET)	TO STATION	DIST OUT (FEET)	LEFT	RIGHT	TYPE "D" FENCE (LIN. FT.)	7' BRACED POSTS (EACH)	16' GATES (EACH)	REMARKS	CONSTRUCTION SOURCE REFERENCE
SHEET TOTAL										

No.	Revision	By	Date

EUREKA ENERGY CO.
A SUBSIDIARY OF PACIFIC GAS & ELECTRIC
215 MARKET STREET
SAN FRANCISCO, CALIF. 94106
415-981-3232
90 W. 100 NO. ST.
PRICE, UTAH 84501
801-637-5610

Dugout Canyon Road

SUMMARY SHEET

ACCEPTED Gerry A. Davis 10/21/81

Designed	Checked	Approved	Date	Sheet
JM	KBW	Ralph E. Watson	Oct. 5, 1981	3C
Drawn	Date	Scale	Project Number	
LNR	1-30-80	Not to scale	PE 10-01-02	

SUMMARY SHEET

DRAINAGE

STATION	X-ING ANGLE	HEIGHT OF COVER	PIPE CULVERT 18" (LINEAR FEET)	PIPE CULVERT 24"	PIPE CULVERT 30"	PIPE CULVERT 36"	PIPE CULVERT 42"	PIPE CULVERT "	PIPE CULVERT 54"	PIPE CULVERT '	PIPE CULVERT '	METAL END SECTION 18" (EACH)	METAL END SECTION 24"	METAL END SECTION 30"	METAL END SECTION 36"	METAL END SECTION 42"	METAL END SECTION '	METAL END SECTION 54"	HEADWALL 16'-7x10'-1 S.P.P.A (EACH)	HEADWALL 1.5:1 S.P. (EACH)	HEADWALL 144" S.P. (EACH)	16'-7x10'-1 STR PLATE PIPE (LIN.FT.)	132" STR. PLATE PIPE (LIN.FT.)	144" STR. PLATE PIPE (LIN.FT.)	LOOSE RIP RAP (CU.YD.)		DRAINAGE CHANNEL (CU.YD.)	SMALL DITCH EXCAVATION (CU.YD.)	REMARKS	CONSTRUCTION SOURCE REFERENCE
12+80	135°	5.7'																	2			170			290.4					
37+00	90°	2.1'	66																											
64+00	90°	1.5'	56																											
75+10	63°	2.9	110																											
121+35	45°	3.0'					82									2									3.2					
139+40	85°	1.5'			58									2														85	INLET & OUTLET DITCH REQ.D	
146+85	133°	2.4				82									2										2.9					
169+55	100°	3.5		110									2												2.2					
173+15	120°	8.1			116									2											2.6					
182+90	110°	3.3					68									2									3.2					
198+85	105°	2.5			62									2											2.6					
215+60	90°	2'				66									2										2.9			30	INLET DITCH REQ.D	
218+35	120°	2.5'																		2			80		144.1					
247+40	60°	3.9'			102									2											2.6					
323+50	110°	4.4'	104									2													2.2					
329+25	125°	4.7'		100									2												2.2					
335+80	90°	2.5'			50									2											2.6					
346+60	90°	1.5	56									2																		
372+00	90°	5.4	86									2																		
394+90	112°	1'	56'									2																60	INLET & OUTLET DITCH REQ.D	
397+95	135°	2.5'																			2			100	281.5					
427+90	70°	1.9'	84									2																		
435+70	90°								66									2							4.3					
461+00	60°	2.5'																		2			100		144.1					
64+50 to +30																											140.00		TYPE 2	
74+50 to 82+50																											400.0		TYPE 2	
222+50 to 234+50																											450.00		TYPE 2	
276+15 to 278+60																											122.50		TYPE 2	
287+40 to 299+75																											617.50		TYPE 2	
330+25 to 332+25																											474.07		TYPE 1	
350+50 to 355+75																											124444		TYPE 1	
379+25 to 381+25																											474.07		TYPE 1	
411+60 to 416+50																											1161.48		TYPE 1	
269+00	90°	4.5	84									2																		
295+00	65°	5'	108									2																		
			810	210	388	148	130		66			14	4	10	4	4	0	2	2	4	2	170	180	100	893.6		5084.05	175		

FENCING & GATE

FROM STATION	DIST. OUT (FEET)	TO STATION	DIST. OUT (FEET)	LEFT	RIGHT	TYPE "D" FENCE (LIN. FT.)	7' BRACED POSTS (EACH)	16' GATES (EACH)	REMARKS	CONSTRUCTION SOURCE REFERENCE
SHEET TOTAL										

No.	Revision	By	Date

EUREKA ENERGY CO.
A SUBSIDIARY OF PACIFIC GAS & ELECTRIC
216 MARKET STREET
SAN FRANCISCO, CALIF. 94106
415-981-3232

90 W., 100 NO. ST.
PRICE, UTAH 84501
801-637-6610

DUGOUT CANYON ROAD

SUMMARY SHEET

ACCEPTED Gary A. Norris 10/27/81

Designed	Checked	Approved	Date	Sheet
JMc	RCW	Ralph Watson	Oct. 5, 1981	3B
Drawn	Date	Scale	Project Number	
MA	2-80	Not to scale	PE 10-01-02	

SUMMARY SHEET

BITUMINOUS & SURFACING SUMMARY

FROM STATION	TO STATION	TYPICAL NO.	LENGTH	BITUMINOUS SURFACE COURSE 3/4" MAX.			UNTREATED BASE COURSE 3/4" or 1" MAX.			BITUMINOUS MATERIAL AC-5 or AC-10 VISC. GRADED ASPHALT		BITUMINOUS MATERIAL GRADE MC-70 or MC-250			BITUMINOUS ADDITIVE SUPER CONC.				GRANULAR BORROW			REMARKS
			FEET	AV. WIDTH FEET	DEPTH INCHES	TONS	AV. WIDTH FEET	DEPTH INCHES	TONS	%	TONS	AV. WIDTH FEET	APP.	TONS	%	LBS.			AV. WIDTH FEET	DEPTH INCHES	TONS	
10+00 85+50	68+00 109+00																					
116+50 167+50	167+50 217+00	1	18,200	31.85	4"	13,525.6	36.02	5	18,437.7	6	811.5	33.70	0.3	82.1	0.25	4057.5			39.60	7	27,957.9	NON PLASTIC & LOW PLASTIC AREAS (BELOW FISH CK.JCT.)
68+00 109+00	85+50 116+50	2	2,500	31.85	4"	1857.9	36.02	5	2532.7	6	111.5	33.70	0.3	11.3	0.25	557.5			44.13	32	19,564.3	
287+00 357+00	301+50 367+50	2	2,500	29.27	3 1/2"	1515.9	32.35	5	2274.6	6	91.0	30.54	0.3	10.2	0.25	455			39.96	32	17,715.6	MANCOS SHALE AREAS
224+00 432+00	268+00 468+45.20	4	8045.20	29.27	3 1/2"	4799.8	32.35	5	7307.7	6	288.0	30.54	0.3	32.8	0.25	1440						GRAVEL AREAS
217+00 268+00	224+00 287+00																					
301+50 367+50	357+00 432+00	3	14,600	29.27	3 1/2	8724.9	32.35	5	13,283.7	6	523.5	30.54	0.3	59.7	0.25	2617.5			35.07	5	14,187.3	NON PLASTIC & LOW PLASTIC AREAS (ABOVE FISH CK.JCT.)
	TOTAL					30,424.1			43,836.4		1825.5			196.1		9127.5					79,425.1	
	USE TOTAL					30,500			43,900		1850			200		9200					79,500	
CONSTRUCTION SOURCE REFERENCE																						

DELINEATORS

FROM STATION	TO STATION	DELINEATORS TYPE I EACH	CONSTRUCTION SOURCE REFERENCE
10+00	468+45.20	934	
TOTAL		934	
USE TOTAL		940	

BITUMINOUS & SURFACING SCHEDULE

TYPE	ASSUMED WEIGHT	AMOUNT	TYPE	ASSUMED WEIGHT	AMOUNT
BITUMINOUS SURFACE COURSE	3/4" MAX.	140 LBS./CU.FT.			
UNTREATED BASE COURSE	3/4" or 1" MAX.	135 LBS./CU.FT.	BITUMINOUS ADDITIVE SUPER CONCENTRATED		0.25% of ASPHALT
BITUMINOUS MTL. AC-5 or AC-10 VISC. GRADED ASPH.	234 GAL./TON	6% of MIX	GRANULAR BORROW	133 LBS/CU.FT.	
BIT. MAT. MC-70 or MC-250	249 GAL./TON	0.3 GAL./SQ.YD.			

EARTHWORK

FROM STATION	TO STATION	EMBANKMENT CU.YD.	EXC. CU.YD.	BORROW CU.YD.	EXCESS MATERIAL CU.YD.	REMARKS	CONSTRUCTION SOURCE REFERENCE
10+00	86+41.04	25809	30972	0			
86+41.04	199+16.15	51937	62324	0			
199+16.15	210+75.95	1660	1991	0			
210+75.95	221+40.22	4930	5917	0			
221+40.22	239+89.75	8461	10,154	0			
239+89.75	268+28.66	5374	6450	0			
268+28.66	303+03.71	16107	19,330	0			
303+03.71	322+79.79	13286	15943	0			
322+79.79	341+38.14	15081	18098	0			
341+38.14	384+24.28	61682	74017	0			
384+24.28	451+11.72	53676	64414	0			
451+11.72	453+79.68	4223	5068	0			
453+79.68	455+00.00	1568	1882	0			
455+00	467+54.80	11878	14254	0			
467+54.80	468+45.20	30	1158	0	1122		
TOTAL		275702 *	331972	0	1122		
USE TOTAL			332000	0	1150		

* SHOWN FOR INFORMATION ONLY

LINEAR SUMMARY

BEGINNING STATION	EQUATION STATION BACK	EQUATION STATION AHEAD	END STATION	TOTAL LENGTH FEET	STRUCTURE LENGTH FEET	ROADWAY LENGTH FEET
10+00			468+45.20	45845.20		45845.20
					⊕	5280
					LENGTH IN MILES	8.683

No.	Revision	By	Date

EUREKA ENERGY CO.
A SUBSIDIARY OF PACIFIC GAS & ELECTRIC
215 MARKET STREET
SAN FRANCISCO, CALIF. 94106
415-981-3232
80 W., 100 NO. ST.
PRICE, UTAH 84501
801-637-8810

DUGOUT CANYON ROAD

SUMMARY SHEET

ACCEPTED Gary A. Dunn 11/27/81

Designed	Checked	Approved	Date	Sheet
JMc	RGW	Ralph E. Watson	Oct. 5, 1981	3A
Drawn	Date	Scale	Project Number	
LNR	1-30-80	Not to scale	PE 10-01-02	

SUMMARY SHEET

SUMMARY OF ITEMS

DESCRIPTION	UNIT	QUANTITY	LINE NO.	CONSTRUCTION SOURCE REF.
MOBILIZATION	LUMP	●		
FLAGGING	HOUR	500		
ROADWAY EXCAVATION	CU. YD	332,000		
EXCESS MATERIAL	CU. YD.	1,150		
BITUMINOUS SURFACE COURSE 3/4 MAX	TON	30,500		
UNTREATED BASE 3/4" or 1" MAX.	TON	43,900		
VISCOSITY GRADED ASPHALT BITUMINOUS MATERIAL AC-5 or AC-10	TON	1850		
BITUMINOUS MATERIAL MC-70 or MC-250	TON	200		
GRANULAR BORROW	TON	79,500		
BITUMNOUS. ADDITVE SUPER CONCENTRATED	LBS.	9200		
DELINEATORS TYPE I	EACH	940		
18" PIPE CULVERT	LIN. FT.	810		
24" PIPE CULVERT	LIN. FT.	210		
30" PIPE CULVERT	LIN. FT.	388		
36" PIPE CULVERT	LIN. FT	148		
42" PIPE CULVERT	LIN. FT.	130		
54" PIPE CULVERT	LIN. FT.	66		
18" METAL END SECT.	EACH	14		
24" METAL END SECT.	EACH	4		
30" METAL END SECT.	EACH	10		
36" METAL END SECT.	EACH	4		
42" METAL END SECT.	EACH	4		
54" METAL END SECT.	EACH	2		
HEADWALL 16'-7"x10'-1" S.P.P.A.	EACH	2		
HEADWALL 132" S.P.P.	EACH	4		
HEADWALL 144" S.P.P.	EACH	2		
16'-7"x 10'-1" STR. PLATE PIPE	LIN. FT.	170		
132" STR. PLATE PIPE	LIN. FT.	180		
144" STR. PLATE PIPE	LIN. FT.	100		
LOOSE RIP RAP	CU. YD.	950		
DRAINAGE CHANNEL	CU. YD.	8700		
SMALL DITCH EXCAVATION	CU. YD.	200		
HIGHWAY TRAFFIC PAINT	GAL.	560		
PAVEMENT MARKING TAPE	LIN. FT.	460		
LOG & POLE CHECK DAMS	EACH	5		
HAY OR STRAW CHECK DAMS TYPE "A"	EACH	18		
TEMP. BERM & SLOPE DRAINS	LIN. FT.	3700		

SUMMARY OF ITEMS

DESCRIPTION	UNIT	QUANTITY	LINE NO.	CONSTRUCTION SOURCE REF.
RIGHT OF WAY MARKERS	EACH	215		
BEAM GUARDRAIL	LIN. FT.	2900		
GUARDRAIL APPROACH ELEMENTS	EACH	12		
CONTINGENT SUM PAY ITEM	LUMP	●		

MISCELLANEOUS SUMMARY

DESCRIPTION	UNIT	QUANTITY	LINE NO.	CONSTRUCTION SOURCE REF.
MOBILIZATION	LUMP	●		
FLAGGING	HOUR	500		
CONTINGENT SUM PAY ITEM	LUMP	●		

No.	Revision	By	Date

EUREKA ENERGY CO
A SUBSIDIARY OF PACIFIC GAS & ELECTRIC
215 MARKET STREET
SAN FRANCISCO, CALIF. 94106
415-981-3232
90 W. 100 NO. ST.
PRICE, UTAH 84501
801-637-8810

DUGOUT CANYON ROAD

SUMMARY SHEET

ACCEPTED 10/27/81

Designed	Checked	Approved	Date	Sheet
JMc	RCW	Ralph E. Watson	Oct. 5, 1981	3
Drawn	Date	Scale	Project Number	
LNR	1-31-80	Not to scale	PE 10-01-02	

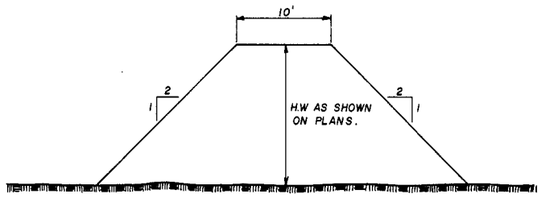

TYPICAL DIKE DETAIL

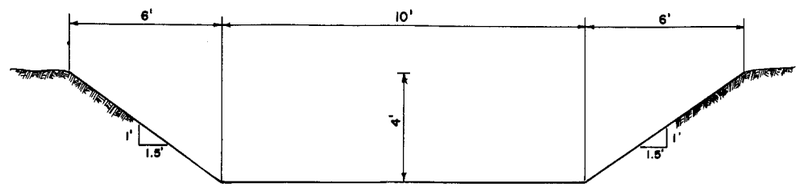

DRAINAGE CHANNEL TYPE I

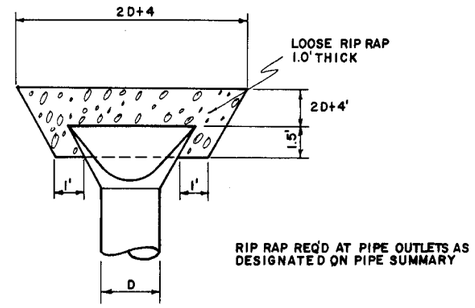

RIP RAP AT 24" TO 48" PIPE

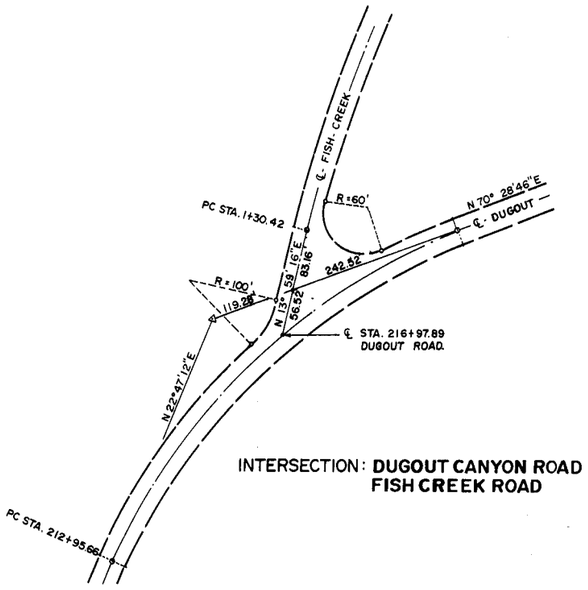

INTERSECTION: **DUGOUT CANYON ROAD**
FISH CREEK ROAD

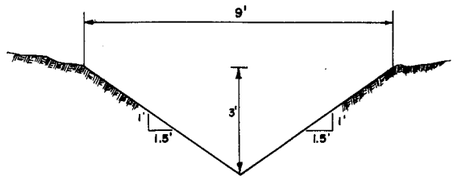

DRAINAGE CHANNEL TYPE 2

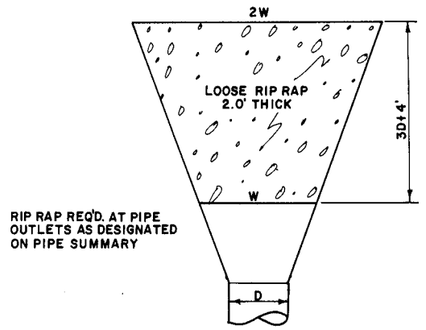

RIP RAP REQ'D. AT PIPE
OUTLETS AS DESIGNATED
ON PIPE SUMMARY

RIP RAP AT PIPE LARGER THAN 48"

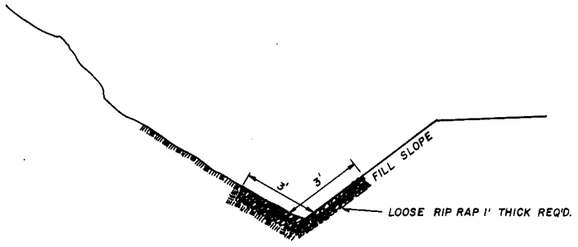

RIP RAP FILL SLOPE DETAIL.
STA. 147+00 TO 149+50 ON LT.

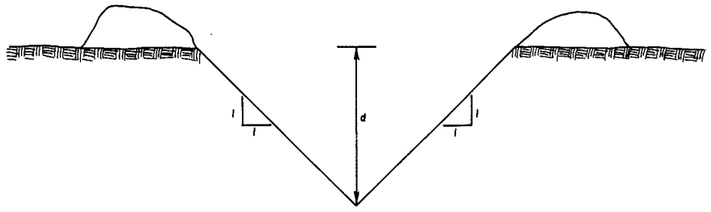

INLET & OUTLET DITCH

NOTE: d AND GRADE LINE FOR DITCH TO BE DETERMINED BY THE ENGINEER. GRADE TO DRAIN.

No.	Revision	By	Date

EUREKA ENERGY CO.
A SUBSIDIARY OF
PACIFIC GAS & ELECTRIC

215 MARKET STREET
SAN FRANCISCO, CALIF.
94106
415 - 981 - 3232

90 W., 100 NO. ST.
PRICE, UTAH
84501
801-637-6610

DUGOUT CANYON ROAD

TYPICAL DETAILS

ACCEPTED 11/27/81

Designed	Checked	Approved	Date	Sheet
JMc	RGW	Ralph E. Watson	Oct. 5, 1981	2A
Drawn	**Date**	**Scale**	**Project Number**	
DJG	2- 80	Not to scale	PE 10-01-02	

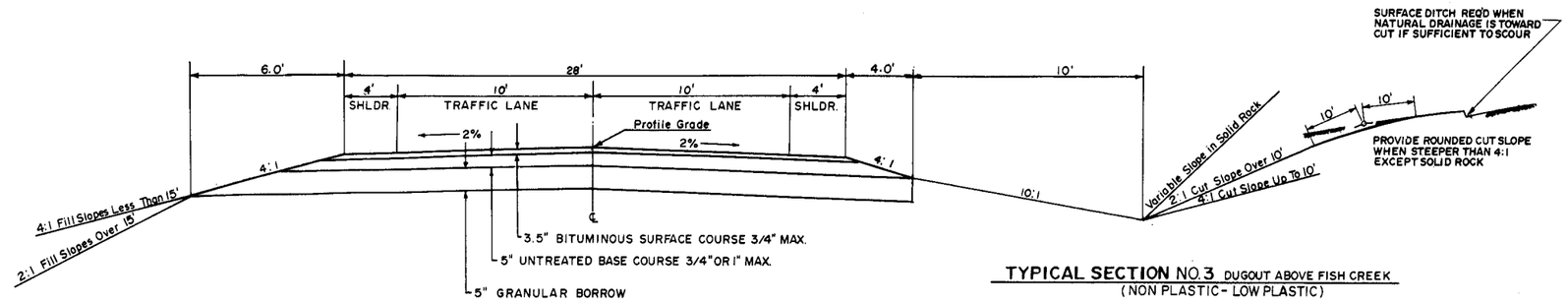

TYPICAL SECTION NO. 3 DUGOUT ABOVE FISH CREEK
(NON PLASTIC - LOW PLASTIC)

STA. 268+00 - 287+00, 301+50 - 357+00, 367+50 - 432+00, 217+00 — 224+00.

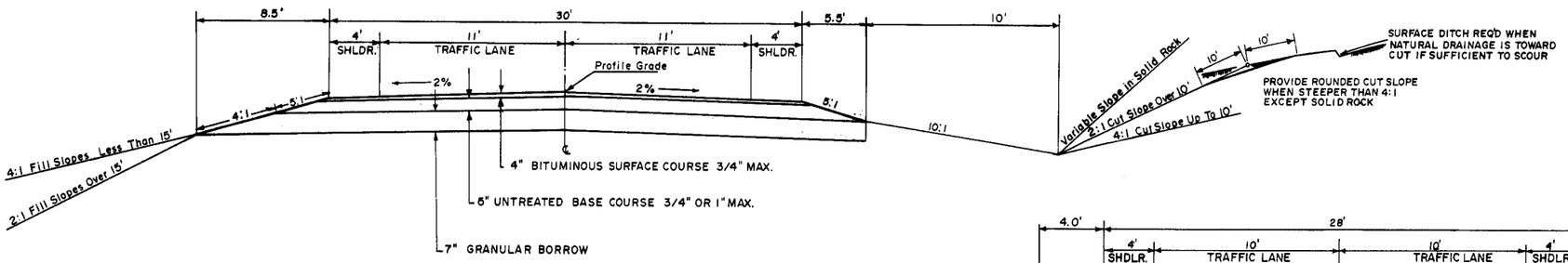

TYPICAL SECTION NO. 1 - NON PLASTIC - LOW PLASTIC

STA. 10+00 - 68+00, 85+50 - 109+00, 116+50 - 217+00
DESIGN SPEED 50 MPH

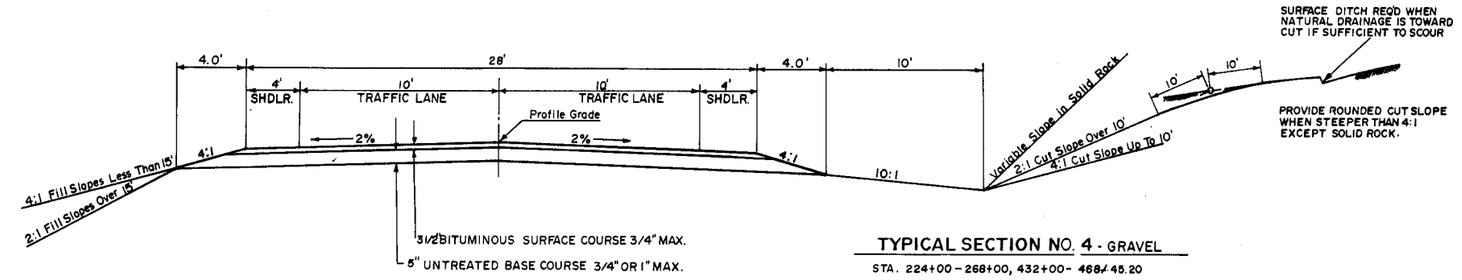

TYPICAL SECTION NO. 4 - GRAVEL

STA. 224+00 - 268+00, 432+00 - 468+45.20

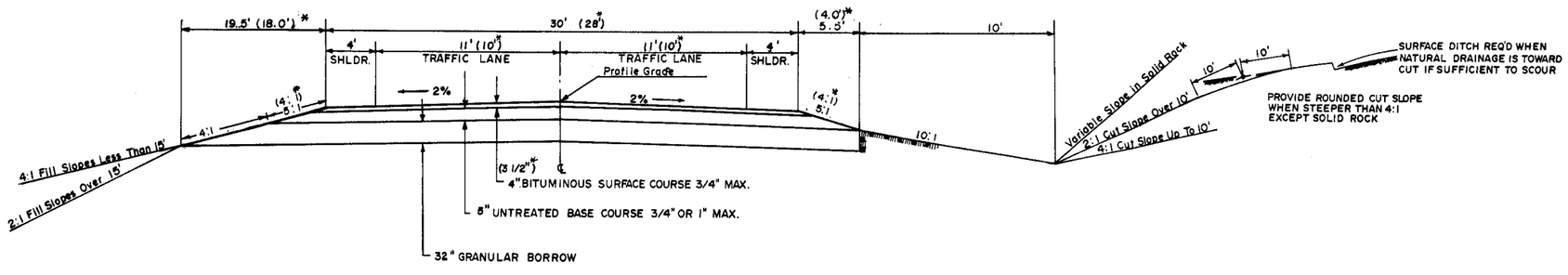

TYPICAL SECTION NO. 2 - MANCOS

STA. 68+00 - 85+50, 109+00 - 116+50, 287+00 - 301+50, 357+00 - 367+50
DESIGN SPEED 50 M.P.H.

* : USE THIS DIMENSION FROM STA. 287+00 TO STA. 301+50 AND FROM STA. 357+00 TO STA. 367+50

No.	Revision	By	Date

EUREKA ENERGY CO.
A SUBSIDIARY OF PACIFIC GAS & ELECTRIC
215 MARKET STREET
SAN FRANCISCO, CALIF. 94106
415 - 981 - 3252
90 W. 100 NO. ST.
PRICE, UTAH 84501
801 - 637 - 8810

DUGOUT CANYON ROAD

TYPICAL SECTION

ACCEPTED 10/27/81

Designed	Checked	Approved	Date	Sheet
JMc	RGW	Ralph Swanson	Oct 5, '81	2
Drawn	**Date**	**Scale**	**Project Number**	
LNR	1-20-80	Not to scale	PE 10 - 01 - 02	

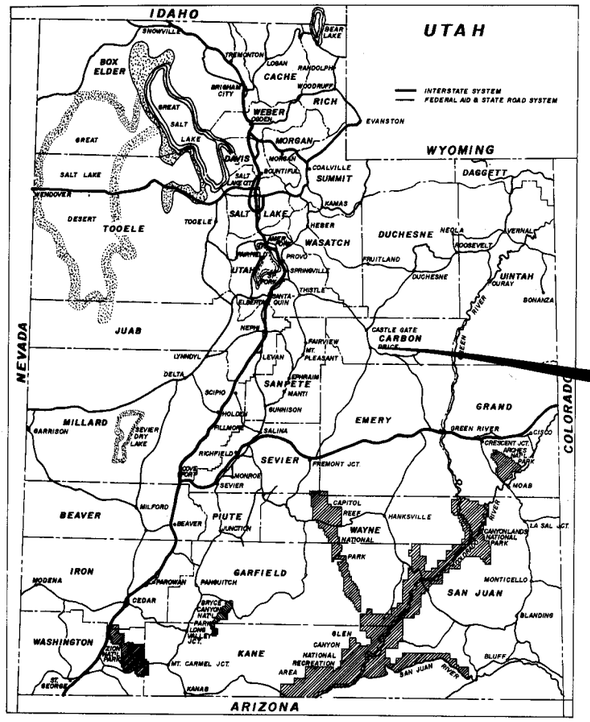

EUREKA ENERGY COMPANY

A SUBSIDIARY OF PACIFIC GAS AND ELECTRIC

PLANS OF PROPOSED HAUL ROAD
FISH CREEK ROAD

LENGTH = 3.954 MILES
GRADING, DRAINAGE & SURFACING

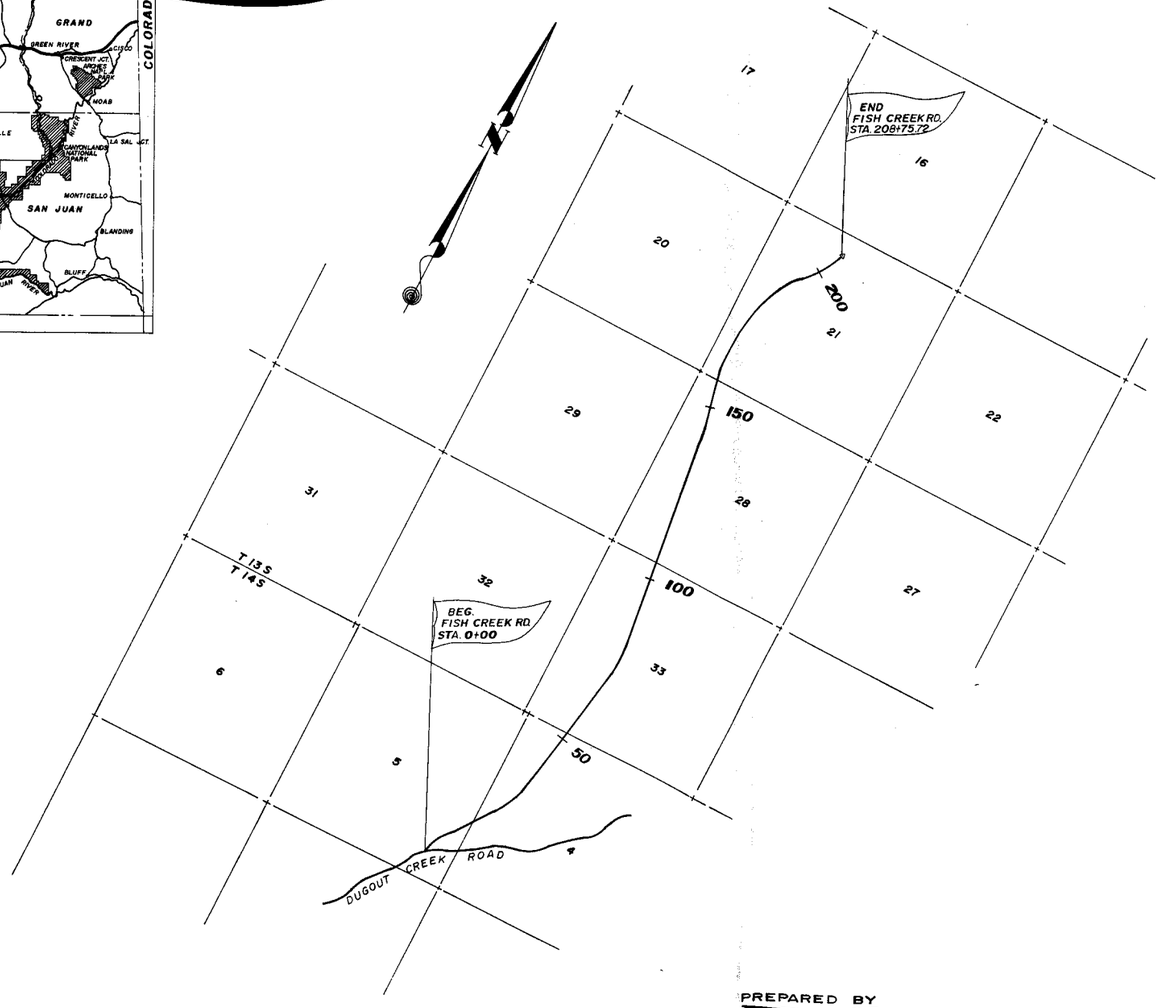

RECEIVED
DEC 11 1981
DIVISION OF
OIL, GAS & MINING

ROADWAY DRAWINGS	
SHEET NO.	DESCRIPTION
1	TITLE SHEET
2	TYPICAL SHEETS
3 - 3D	SUMMARY SHEETS
4 - 11	PLAN & PROFILE SHEETS

STRUCTURE DRAWINGS		
DWG. NO.	NO. SHTS.	DESCRIPTION
H1	2	HEADWALL FOR 120" STRUCTURAL PLATE PIPE

STANDARD DRAWINGS		
DWG. NO.	DATE	DESCRIPTION
605-1	2-5-80	FILL HEIGHTS FOR PIPE CULVERTS
605-2	9-6-77	METAL CULVERT END SECTIONS
605-20	1-25-79	REINFORCED CONCRETE CULVERTS
725-1	9-9-80	R.W. MARKER & MAIL BOX POSTS
726-2	10-14-80	DELINEATON OTHER THAN INTERSTATE
735-1	6-26-81	BEAM GUARDRAIL
735-2	12-5-72	GUARDRAIL APPROACH ELEMENT INSTALLATION
735-2A	1-23-80	TURN DOWN BRACKET FOR STEEL GUARDRAIL POSTS
745-1B	4-3-79	CONSTRUCTION NOTIFICATION SIGNS
745-1C	7-8-80	CONSTRUCTION SIGNING BARRICADES
745-41	3-11-80	TYPICAL PAVEMENT MARKINGS
745-60	6-30-81	HIGHWAY SIGNS OTHER THAN FREEWAYS
805-1	10-14-80	SUPERELEVATION AND WIDENING
1010	9-25-81	T.E.C. CONTOUR DITCHING AND TEMPORARY BERMS
1011	9-25-81	T.E.C. TEMPORARY SLOPE DRAINS
1012	9-25-81	T.E.C. SEDIMENT STRUCTURES
1013	9-25-81	T.E.C. SEDIMENT STRUCTURES
1014	9-25-81	T.E.C. CHECK DAMS

PREPARED BY
ECKHOFF, WATSON & PREATOR
580 NORTH MAIN — CEDAR CITY, UTAH 84720
801-586-3004
1798 SO. WEST TEMPLE-SALT LAKE CITY, UTAH 84115
801-486-5621
ENGINEERS-PLANNERS-SURVEYORS

ENGINEER'S CERTIFICATE

I, RALPH E. WATSON, REGISTERED ENGINEER NO. 3367 DO HEREBY CERTIFY THAT THESE PLANS HAVE BEEN PREPARED BY ME AND UNDER MY DIRECT SUPERVISION AND THEY ARE ACCURATE TO THE BEST OF MY KNOWLEDGE.

Ralph E. Watson — 10-15-81
RALPH E. WATSON, P.E. — DATE

REGISTERED PROFESSIONAL ENGINEER — Ralph E. Watson — 3367 — State of Utah

ACCEPTED Gary A. Dam 10/27/81

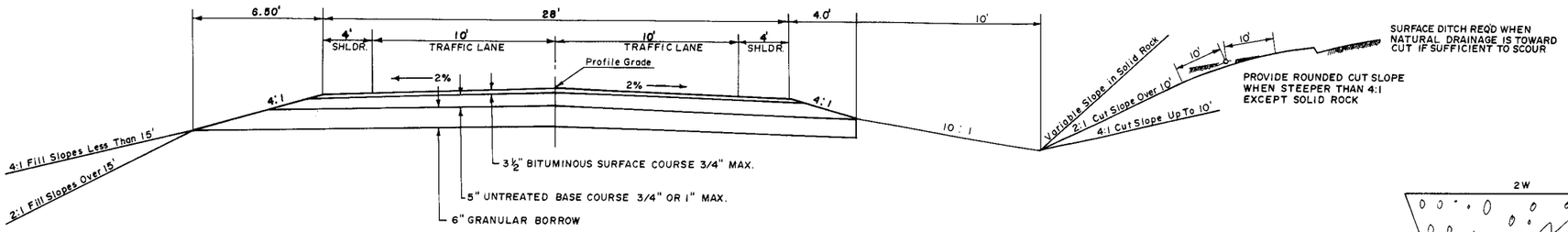

TYPICAL SECTION NO. 1 NON PLASTIC- LOW PLASTIC

STA. 0+00 - 98+00

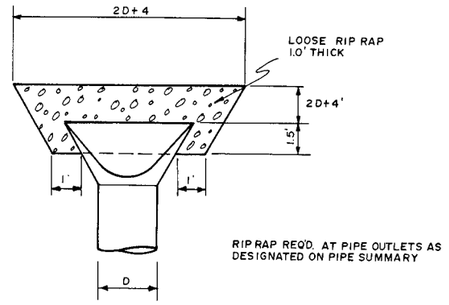

RIP RAP AT 24" TO 48" PIPE

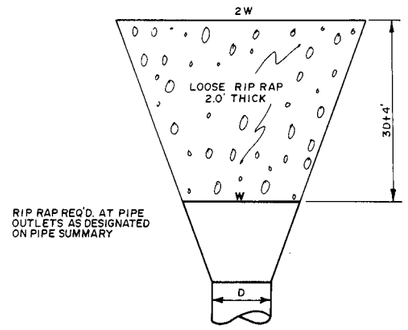

RIP RAP AT PIPE LARGER THAN 48"

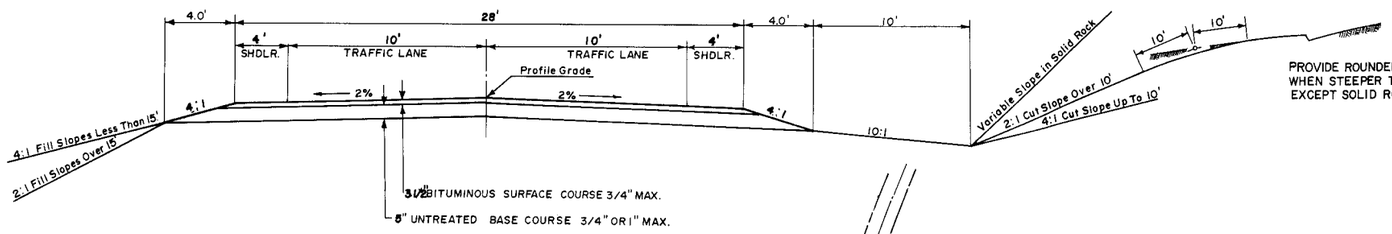

TYPICAL SECTION NO. 2 GRAVEL

STA. 98+00 208+75.72

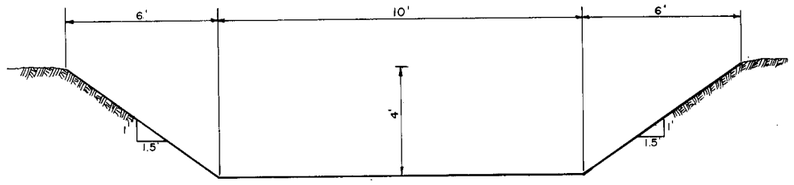

DRAINAGE CHANNEL TYPE 1

NOTE: WHEN CONSTRUCTING DRAINAGE CHANNEL TYPE 1, MAINTAIN NATURAL STREAM MEANDER AS MUCH AS POSSIBLE AND LEAVE SOME LARGE STONES AND BOULDERS IN THE CHANNEL BOTTOM TO DECREASE CHANNEL VELOCITY.

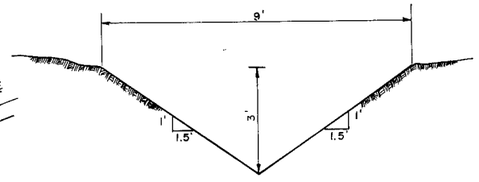

DRAINAGE CHANNEL TYPE 2

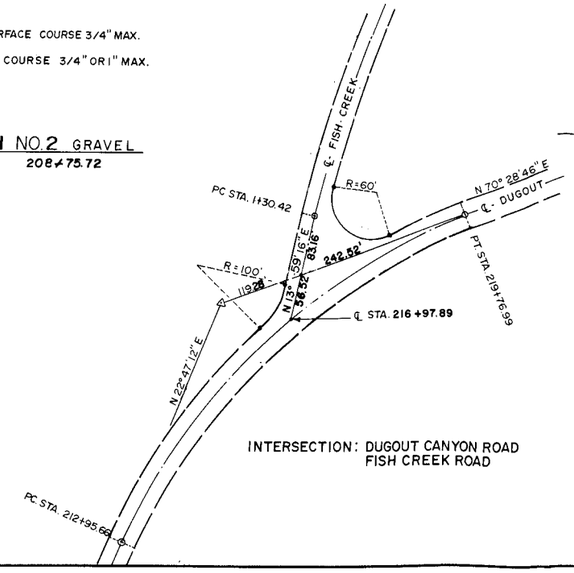

INTERSECTION: DUGOUT CANYON ROAD
FISH CREEK ROAD

No.	Revision	By	Date

EUREKA ENERGY CO.
A SUBSIDIARY OF PACIFIC GAS & ELECTRIC
215 MARKET STREET
SAN FRANCISCO, CALIF. 94106
415-981-3232
90 W. 100 NO. ST.
PRICE, UTAH 84501
801-637-6610

FISH CREEK ROAD

TYPICAL SECTIONS

ACCEPTED 10/27/81

Designed	Checked	Approved	Date	Sheet
JMc	RLW	Ralph Walton	Oct 5, 1981	2
Drawn L.N.R.	Date 2-80	Scale	Project Number	

SUMMARY SHEET

SUMMARY OF ITEMS

DESCRIPTION	UNIT	QUANTITY	LINE NO	CONSTRUCTION SOURCE REF.
MOBILIZATION	LUMP	●		
FLAGGING	HOUR	200		
ROADWAY EXCAVATION	CU. YD	140,900		
BORROW	CU. YD.	32,400		
SUPER BITUMINOUS ADDITIVE CONCENTRATE	L.B.S.	3,800		
BITUMINOUS SURFACE COURSE 3/4 MAX	TON	12,500		
UNTREATED BASE 3/4" or 1" MAX.	TON	19,000		
VISCOSITY GRADED ASPHALT BITUMINOUS MATERIAL AC-5 or AC-10	TON	750		
BITUMINOUS MATERIAL MC-70 or MC-250	TON	86		
GRANULAR BORROW	TON	11,500		
DELINEATORS TYPE I	EACH	210		
36" PIPE CULVERT	LIN. FT.	218		
18" PIPE CULVERT	LIN. FT.	216		
24" PIPE CULVERT	LIN. FT.	78		
30" PIPE CULVERT	LIN. FT.	130		
42" PIPE CULVERT	LIN. FT.	176		
48" PIPE CULVERT	LIN. FT.	96		
18" METAL END SECT.	EACH	2		
24" METAL END SECT.	EACH	2		
30" METAL END SECT	EACH	2		
42" METAL END SECT	EACH	4		
48" METAL END SECT.	EACH	2		
HEADWALL FOR 120" S.P.P.	EACH	4		
120 STRUCTURAL PLATE PIPE	LIN. FT.	324		
LOOSE RIP RAP	CU. YD.	430		
SURFACE DITCH	LIN. FT.	2100		
DRAINAGE CHANNEL	CU. YD.	4850		
36" METAL END SECTION	EACH	2		
HIGHWAY TRAFFIC PAINT	GAL.	204		
PAVEMENT MARKING TAPE	LIN. FT.	210		
LOG & POLE CHECK DAMS	EACH	4		
HAY OR STRAW CHECK DAMS TYPE "A"	EACH	25		
TEMP. BERM & SLOPE DRAINS	LIN. FT.	2000		
RIGHT OF WAY MARKERS	EACH	70		
BEAM GUARDRAIL	LIN. FT	2000		
GUARDRAIL APPROACH ELEMENTS	EACH	6		
CONTINGENT SUM PAY ITEM	LUMP	●		

SUMMARY OF ITEMS

DESCRIPTION	UNIT	QUANTITY	LINE NO	CONSTRUCTION SOURCE REF

MISCELLANEOUS SUMMARY

DESCRIPTION	UNIT	QUANTITY	LINE NO.	CONSTRUCTION SOURCE REF.
MOBILIZATION	LUMP	●		
FLAGGING	HOUR	200		
CONTINGENT SUM PAY ITEM	LUMP	●		

EUREKA ENERGY CO
A SUBSIDIARY OF PACIFIC GAS & ELECTRIC
215 MARKET STREET
SAN FRANCISCO, CALIF.
94106
415-981-3252
90 W., 100 NO. ST.
PRICE, UTAH
84501
801-637-6810

FISH CREEK ROAD

SUMMARY SHEET

ACCEPTED 10/07/81

Designed	Checked	Approved	Date
JMc	RW	Ralph Eckstrom	Oct 5, 1981
Drawn LNR	1-31-80	Not to scale	PE 10-01-02

3

SUMMARY SHEET

BITUMINOUS & SURFACING SUMMARY

FROM STATION	TO STATION	TYPICAL NO.	LENGTH	BITUMINOUS SURFACE COURSE 3/4" MAX.			UNTREATED BASE COURSE 3/4" or 1" MAX.			BITUMINOUS MATERIAL AC-5 or AC-10 VISC. GRADED ASPHALT		BITUMINOUS MATERIAL GRADE MC-70 or MC-250			BITUMINOUS ADDITIVE SUPER CONCENTRATED				GRANULAR BORROW			REMARKS
			FEET	AV. WIDTH FEET	DEPTH INCHES	TONS	AV. WIDTH FEET	DEPTH INCHES	TONS	%	TONS	AV. WIDTH FEET	APP.	TONS	%	LBS.	%	TONS	AV. WIDTH FEET	DEPTH INCHES	TONS	
0+00	98+00		9800	29.27	3 1/2"	58564	32.35	5	8916.5	6	351.4	30.54	0.3	40.1	0.25	1757			35.25	6	11486.2	NON-PLASTIC & LOW - PLASTIC
98+00	208+75.72		11075.72	29.27	3 1/2"	6618.9	32.35	5	10,077.3	6	397.1	30.54	0.3	45.3	0.25	1985.5						GRAVEL AREA
	TOTAL					12475.3			18,993.8		748.5			85.4		3742.5					11486.2	
	USE TOTAL					12,500			19,000		750			86		3800					11,500	
CONSTRUCTION SOURCE REFERENCE																						

DELINEATORS

FROM STATION	TO STATION	DELINEATORS TYPE I EACH	CONSTRUCTION SOURCE REFERENCE
0+00	208+75.72	208	
TOTAL		208	
USE TOTAL		210	

BITUMINOUS & SURFACING SCHEDULE

TYPE	ASSUMED WEIGHT	AMOUNT	TYPE	ASSUMED WEIGHT	AMOUNT
BITUMINOUS SURFACE COUSE	3/4" MAX.	140 LBS. / CU. FT.			
UNTREATED BASE COURSE	3/4" or 1" MAX.	135 LBS. / CU. FT.	BITUMINOUS ADDITIVE SUPER CONCENTRATED		0. 25 % of ASPHALT
BITUMINOUS MTL. AC-5 or AC-10 VISC. GRADED ASPH.	234 GAL. / TON	6% of MIX.	GRANULAR BORROW	133 LBS/CU.FT.	
BIT. MAT. MC-70 or MC-250	249 GAL. / TON	0.3 GAL. / SQ. YD.			

EARTHWORK

FROM STATION	TO STATION	EMBANKMENT CU. YD.	EXC. CU. YD.	BORROW CU. YD.	EXCESS MATERIAL CU. YD.	REMARKS	CONSTRUCTION SOURCE REFERENCE
0+00	19+00	14653	828	16756			
19+00	205+56.17	107511	129010	0			
205+56.17	206+99.11	12965	0	15558			
206+99.11	208+75.72	9152	10983	0			
TOTAL		144281 *	140821	32314	0		
USE TOTAL			140900	32400			

* : FOR INFORMATION ONLY

LINEAR SUMMARY

BEGINNING STATION	EQUATION STATION BACK	EQUATION STATION AHEAD	END STATION	TOTAL LENGTH FEET	STRUCTURE LENGTH FEET	ROADWAY LENGTH FEET
0+00			208+75.72	20875.72		20875.72
					÷	5280
					Length in miles	3.954

No.	Revision	By	Date

EUREKA ENERGY CO
A SUBSIDIARY OF PACIFIC GAS & ELECTRIC
215 MARKET STREET SAN FRANCISCO, CALIF. 94106 415-981-3232
90 W., 100 NO. ST. PRICE, UTAH 84501 801-637-6810

FISH CREEK ROAD

SUMMARY SHEET

ACCEPTED Gary A. Dean 11/27/81

Designed	Checked	Approved	Date	Sheet
JMc	RBW	Ralph E. Watson	Oct 5, 1981	3A
Drawn	Date	Scale	Project Number	
LNR	2-5-80	Not to scale	PE 10-01-02	

SUMMARY SHEET

DRAINAGE

STATION	X-ING ANGLE	HEIGHT OF COVER	PIPE CULVERT 18" (LINEAR FEET)	24"	30"	36"	42"	48"	METAL END SECTIONS 18" (EACH)	24"	30"	36"	42"	48"	HEADWALL FOR 120" S.P.P. (LN.FT.)	120" STR PLATE PIPE (LN.FT.)	LOOSE RIP RAP (CU.YD.)	SURFACE DITCH (LN.FT.)	DRAINAGE CHANNEL (CU.YD.)	REMARKS	CONSTRUCTION SOURCE REFERENCE
1+50 to 4+00																			593	TYPE 1	
8+40 to 9+50																			261	TYPE 1	
13+30	110°	5.0					76						2				3.18	100'			
14+20	120°	7.0						96						2			3.44				
16+50 to 19+00																			125	TYPE 2	
32+50	157°	2.0'	146						2												
31+50 to 40+50																		900'			
74+50 to 79+00																		450'			
95+60	65°	9.0					100						2				3.18				
132+10	125°	1.0'	70																		
132+50 to 139+00																		650			
155+15	23°	1.5'				218						2					2.9				
156+25 to 160+00																			188	TYPE 2	
176+65	68°	1.0'		78'						2							2.2				
179+50 to 181+00																			356	TYPE 1	
182+10	45°	3.0'													2	234	204				
185+00 to 191+50																			1541	TYPE 1	
194+30	135°	3.0'													2	90	204				
200+50 to 208+00																			1778	TYPE 1	
204+90	73°	9.5			130					2							2.55				
TOTAL			216	78	130	218	176	96	2	2	2	2	4	2	4	324	426	2100	4842		
USE TOTAL			216	78	130	218	176	96	2	2	2	2	4	2	4	324	430	2100	4850		

FENCING & GATE

FROM STATION	DIST. OUT (FEET)	TO STATION	DIST. OUT (FEET)	LEFT	RIGHT	TYPE "D" FENCE (LIN. FT.)	7' BRACED POSTS (EACH)	16' GATES (EACH)	REMARKS	CONSTRUCTION SOURCE REFERENCE
SHEET TOTAL										

EUREKA ENERGY CO.
A SUBSIDIARY OF PACIFIC GAS & ELECTRIC
215 MARKET STREET
SAN FRANCISCO, CALIF.
94106
415-981-3232
90 W. 100 NO. ST.
PRICE, UTAH
84501
801-637-6810

No.	Revision	By	Date

FISH CREEK ROAD

SUMMARY SHEET

ACCEPTED 10/21/81

Designed	Drawn	Approved	Date	Sheet
JML	RCW	Ralph Wilson	Oct 5, 1981	3B
Drawn LNR	Date 1-30-80	Scale Not to scale	Project Number PE 10-01-02	

SUMMARY SHEET

FOR INFORMATION ONLY

NO PASSING AREAS

LANE	FROM STA	TO STA.	LINEAL FEET
NORTH	0+00	28+00	2800
NORTH	54+00	69+00	1500
NORTH	151+00	208+75.72	5775.72
SOUTH	0+00	46+00	4600
SOUTH	72+00	86+00	1400
SOUTH	170+00	208+75.72	3875.72
	TOTAL		1995.44

HIGHWAY TRAFFIC PAINT

FROM STA.	TO STA.	LENGTH	4" SOLID WHITE	4" SOLID YELLOW	4" DASHED YELLOW	PAVEMENT MARKING TAPE	CONSTRUCTION SOURCE REFERENCE
		FEET	325'/GAL.	325'/GAL.	1260'/GAL.	1'/100'	
0+00	208+75.72	20875.72'	128.47	61.39	11.27	208.76'	
SUB TOTAL			128.47	61.39	11.27	208.76'	
USE TOTAL			130	62	12	210	

TEMPORARY EROSION CONTROL

FROM STATION	TO STATION	LEFT	RIGHT	LOG & POLE CHECK DAMS EACH	HAY OR STRAW CHECK DAMS TYPE "A" EACH	TEMP. BERM & SLOPE DRAIN LIN. FT.			REMARKS	CONSTRUCTION SOURCE REFERENCE
1+50			X	1						
8+20			X	1						
17+00		X			1					
20+00		X	X		2					
25+00		X	X		2					
32+00			X		1					
50+00		X	X		2					
60+00		X	X		2					
70+00		X	X		2					
80+00		X	X		2					
90+00		X	X		2					
100+00		X	X		2					
110+00		X	X		2					
120+00		X	X		2					
156+50			X		1					
179+00		X		1						
178+00	184+00	X				600				
185+00	191+00		X			600				
200+00		X		1						
202+00	208+75.72	X				675.72				
TOTAL				4	23	1875.72				
USE TOTAL				4	25	2000				

No.	Revision	By	Date

EUREKA ENERGY CO.
A SUBSIDIARY OF PACIFIC GAS & ELECTRIC
216 MARKET STREET
SAN FRANCISCO, CALIF. 94106
415 - 981 - 3232
90 W. 100 NO. ST.
PRICE, UTAH 84501
801 - 637 - 6610

FISH CREEK ROAD

SUMMARY SHEET

ACCEPTED 10/27/81

Designed	Checked	Approved	Date
JMc	RLW	Ralph L. Wahlstrom	Oct. 5, 1981
Drawn	**Date**	**Scale**	**Project Number**
LNR	2-5-80	Not to scale	PE 10-01-02

Sheet 3C