EST. 43-79
G-23

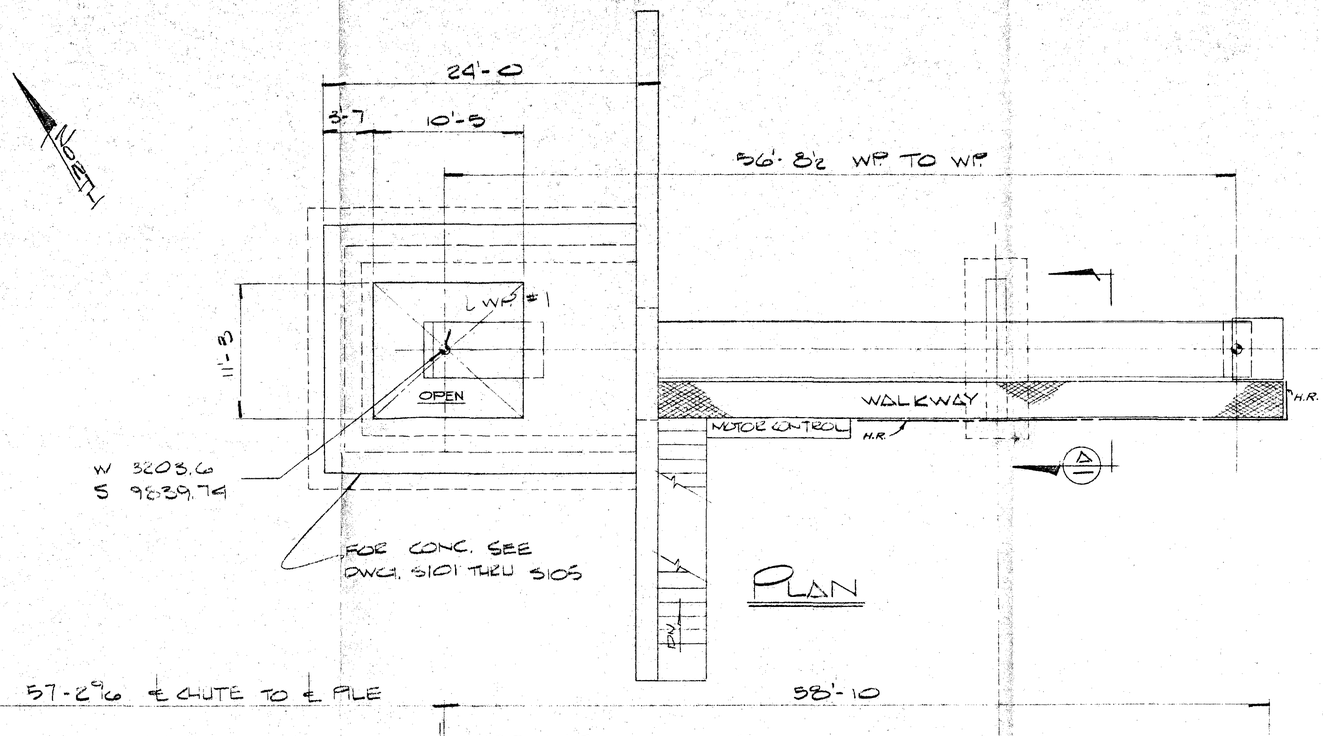

EQUIPMENT LIST

ITEM	QTY.	DESCRIPTION
A	1	HEAD PULLEY - "JEFFREY" 24" DIA. x 52" FACE LAG PULLEY W/ 3⁷⁄₁₆" DIA SHAFT
B	1	SNUB PULLEY - "JEFFREY" 14" DIA x 52" FACE DRUM TYPE W/ 2⁷⁄₁₆" DIA SHAFT
C	1	TAIL PULLEY - "JEFFREY" 20" DIA x 52" FACE SELF. CLEANING WING PULLEY W/ 3⁷⁄₁₆" DIA SHAFT
D	8	TROUGHING IDLER - 35° TYPE MD36351 CAT. Nº 770551
E	2	IMPACT IDLER - 35° TROUGHING TYPE MD36A551 CAT. Nº 770569 "JEFFREY"
F	2	TRANSITION IDLER - 20° TROUGHING TYPE MD36200 CAT. Nº 321758 JEFFREY OR EQUAL
G	1	TRAINING IDLER - JEFFREY 35° TROUGHING IDLER TYPE MD 36T351 CAT. Nº 770785
H	1	BELT SCALE - "AUTOWEIGH" 48" CONVEYOR SCALE
I	4	RETURN IDLER - JEFFREY TYPE MD60 CAT.# 765139
J	2	PILLOW BLOCK - SERIES 225C CAT. Nº 412890 JEFFREY
K	2	TAKE-UP - "JEFFREY" STYLE 4CDS2 CAT. Nº 768701
L	1	REDUCER - DOUBLE REDUCER CLALL II, UNIT 711SH15
M	1	MOTOR - 5HP 3PH, 60 HZ, 460V TEFC 1750 RPM NEMA "C" CLASS "F" INSULATION.
N	1	IMPACT IDLER - 20° TROUGHING TYPE MD36A200 CAT. 322308
O	1	DRIVE SHEAVE - 3V - 2 BELTS, W/ 4 P.D.
P	1	DRIVEN SHEAVE - 3V - 2 BELTS, W/ 4" P.D.
Q	1	BELT CLEANER - HEAD PULLEY - JEFFREY DUPLEX BLADE WIPER OR EQUAL

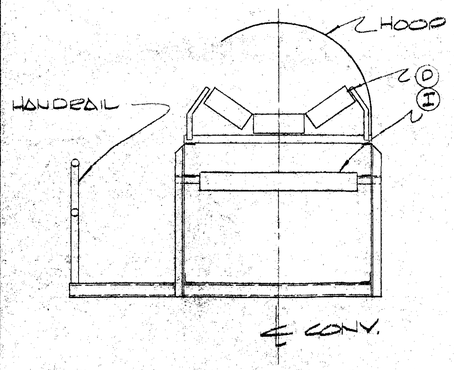

SECTION A

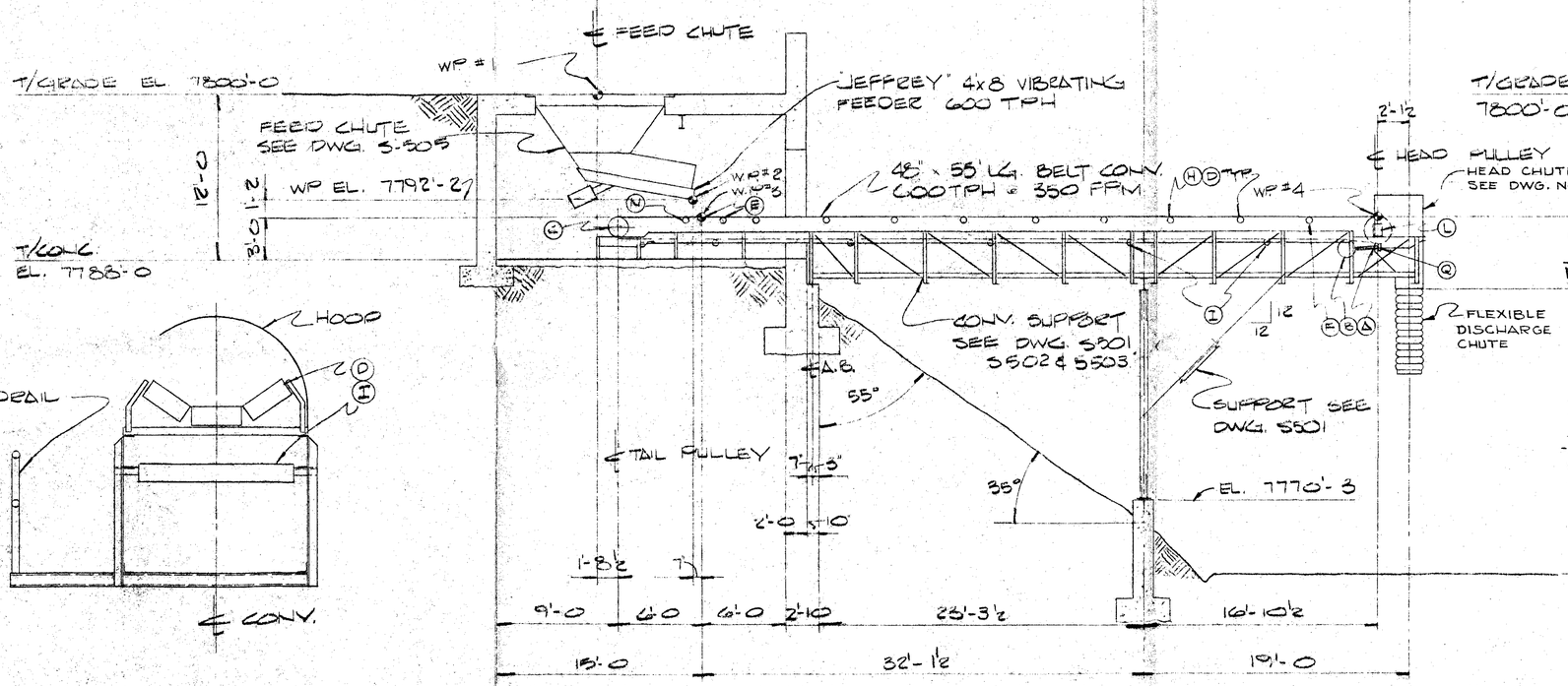

ELEVATION

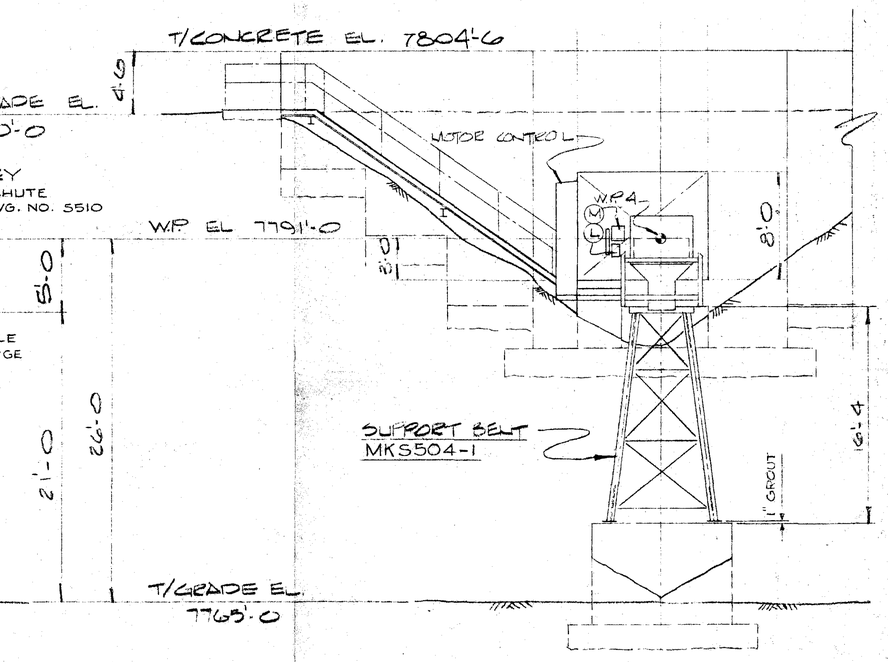

NOTE: FOR ALL HANDRAIL USE SPEED RAIL TYPE FITTINGS

REGISTERED PROFESSIONAL ENGINEER Nº 207 CHARLES J. JARINE STATE OF UTAH

1-22-81

REFERENCES				
DWG. NO.		DWG. NO.		
G-1	PLAN - OPTION Nº 1	S501	STEEL DETAILS	
S101	CONCRETE DETAILS	THRU	"	"
THRU	" "	S505	CHUTE DETAILS	
S105	" "	S510	" "	

REVISIONS		BY	DATE
1	PULLEY LENGTH CHANGED TO 52"	V.W.W.	4-7-81
2			
3			
4			
5			
6			
7			
8			

DRAWN	R. W. Wilson	12-8-80
CHECKED	R. Heaton	1-22-81
APPROVED		
APPROVED		

SHARON STEEL CORP.
MINING DIVISION
ENGINEERING DEPARTMENT, SALT LAKE CITY

U.S. FUEL CO., HIAWATHA, UTAH
KING MINE, Nº 6 TRUCK LOADOUT
CONV. FEED SYSTEM
GENERAL ARRANGEMENT

SCALE 3⁄16" = 1'-0
EST. 43-79
JOB G-23
REVISIONS 1