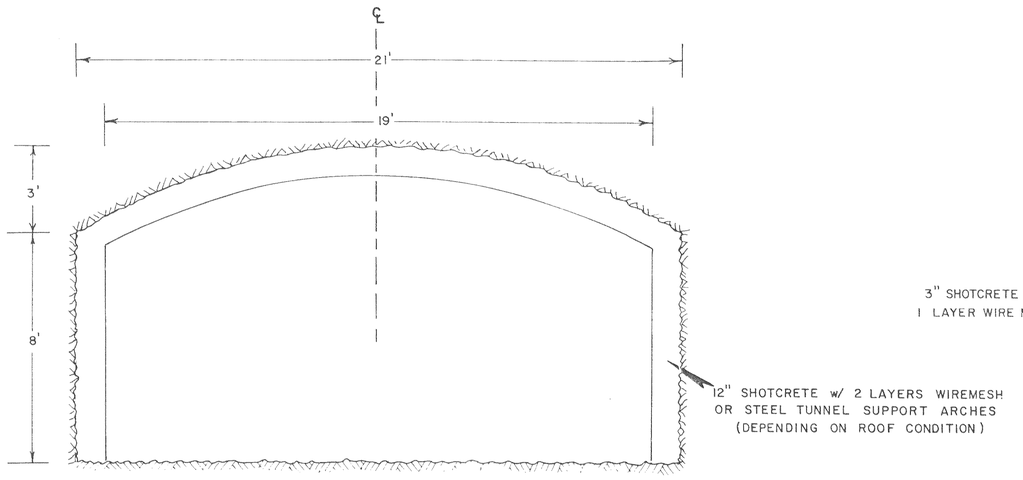

COAL SLOPE
(TYPICAL SECTION MANCOS SHALE)
COVER > 100'
SECTION A-A'
SCALE 1" = 3'

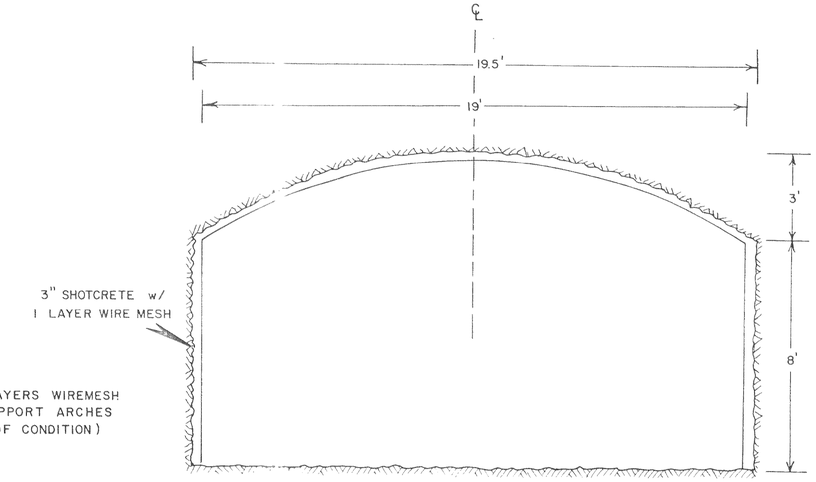

COAL SLOPE
(TYPICAL SECTION MANCOS SHALE)
COVER ≥ 100'
SECTION B-B'
SCALE 1" = 3'

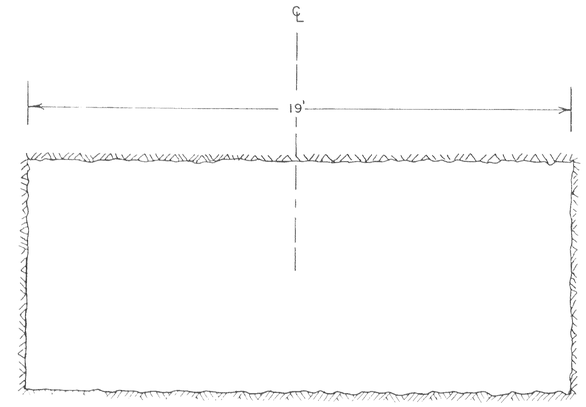

COAL SLOPE
(TYPICAL NON-MANCOS SHALE SECTION)
SECTION C-C'
SCALE 1" = 3'

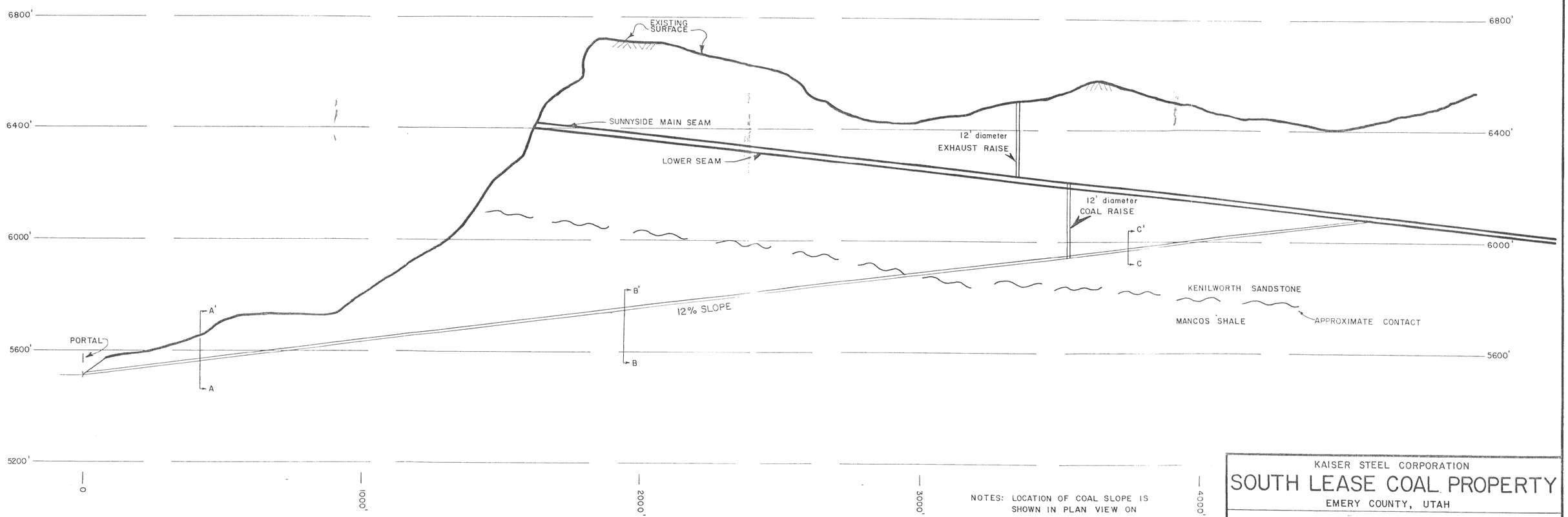

PROFILE
(LOOKING NORTHEAST)
VERTICAL 1" = 200'
HORIZONTAL 1" = 200'

NOTES: LOCATION OF COAL SLOPE IS SHOWN IN PLAN VIEW ON PLATE III-10

RAISES DEPICT POSITIONS RELATIVE TO COAL SEAM AND SLOPE. THESE ARE NOT TO SCALE

KAISER STEEL CORPORATION

SOUTH LEASE COAL PROPERTY

EMERY COUNTY, UTAH

FEB 2 0 2004

COAL SLOPE

SCALE: 1" = 200'

DATE: 8/12/81

PLATE III-12