UtahAmerican Energy, Inc.

Lila Canyon Project
P. O. Box 910
East Carbon, Utah 84501
Phone: (435) 888-4000
(435) 650-3157
Fax: (435) 888-4002

C/007/0013
Received 1/2/15
Tsk ID #4775

December 31, 2014

Daron Haddock
Permit Supervisor
1594 West North Temple, Suite 1210
P.O. Box 145801
Salt Lake City, Utah 84114-5801

Re: UtahAmerican Energy, Inc. Lila Canyon Mine, ACT/009-013, (Replace ditches with culverts (14-005) ID Task #4712

Dear Mr. Haddock:

Please find attached three (3) copies of a submittal replacing some ditches and culverts with larger culverts. In addition revisions have been made to add above ground power lines.

C1 and C2 forms and redline strikeout copies are included.

If you have any questions please give me a call.

Sincerely,

R. Jay Marshall

R. Jay Marshall P.E.
Project Manager / Chief Engineer
Lila Canyon Mine

GARY R. HERBERT
Governor

SPENCER J. COX
Lieutenant Governor

State of Utah

DEPARTMENT OF NATURAL RESOURCES

MICHAEL R. STYLER
Executive Director

Division of Oil, Gas and Mining

JOHN R. BAZA
Division Director

December 4, 2014

Jay Marshall, Resident Agent
UtahAmerican Energy, Inc.
P.O. Box 910
East Carbon, Utah 84520-0910

Subject: Replace Ditches with Culverts, UtahAmerican Energy Inc., Horse Canyon Mine, C/007/0013, Task ID #4712

Dear Mr. Marshall:

The Division has reviewed your application. The Division has identified deficiencies that must be addressed before final approval can be granted. The deficiencies are listed as an attachment to this letter.

The deficiencies authors are identified so that your staff can communicate directly with that individual should questions arise. The plans as submitted are denied. Please resubmit the entire application.

If you have any questions, please call me at (801) 538-5325.

Sincerely,

Daron R. Haddock
Coal Program Manager

DRH/sqs
O:\007013.HOR\WG4712\Deficiencies.docm

GARY R. HERBERT
Governor
GREG BELL
Lieutenant Governor

State of Utah
DEPARTMENT OF NATURAL RESOURCES
MICHAEL R. STYLER
Executive Director
Division of Oil, Gas and Mining
JOHN R. BAZA
Division Director

Technical Analysis and Findings

Utah Coal Regulatory Program

PID: C0070013
TaskID: 4712
Mine Name: HORSE CANYON MINE
Title: REPLACE DITCHES WITH CULVERTS

Operation Plan

Mining Operations and Facilities

Deficiencies Details:

R645-301-526.222; The Division is suggesting that the permittee provide a drawing of the pole configuration to be used at the mine for the transmission of high voltage electricity. The drawing should be included as an appendix to chapter 3 of the current MRP.

jhelfric

Hydrologic Diversion General

Deficiencies Details:

R645-301-742.300 Table 8, of appendix 7-4, shows design summaries of ditches 5a, 5b, and 5c, but a note at the bottom indicates that these ditches will be removed. If these ditches will be removed, the design summary for these sections of ditches should also be removed.

Plate 7-5 displays an undisturbed watershed, UA-6c, but it is not included in the relevant revised tables of appendix 7-4.

Table 2 indicates that DA-15a will be changed to DA-15, but this information has not been updated on plate 7-5. DA-18b is still on plate 7-5 but is no longer in Table 2. The plates and tables should be consistent.

Changes have been made to the disturbed area watersheds, but the sediment yield calculations found on page 45 of appendix 7-4 have not been updated. Please ensure that the correct sediment yield calculations are included in this table.

R645-301-731.700 Plate 7-5 was updated to display changes to culverts and ditches, as well as changes to watershed boundaries at the facility. Plates 7-2, 7-6, 7-6a, and 7-6b should be updated to include relevant updated information as well. Plates 7-2 and 7-6b show disturbed area watersheds that will be outdated if the changes shown on plate 7-5 are approved. Plates 7-6 and 7-6a display sediment pond #1, and its associated features. These maps should be consistent, but currently display differing ditches, inlets and culvert alignments.

R645-301-121.200 As plate 7-5 currently is shown, it is very difficult to view the exact locations of ditches and culverts due to the large amount of information on this plate. This plate should either be clarified or split into multiple plates.

adaniels

Response to Deficiencies
Task ID 4712 (14-002)

R645-301-526.222:

The Division is suggesting that the permittee provide a drawing of the pole configuration to be used at the mine for the transmission of high voltage electricity. The drawing should be included as an appendix to chapter 3 of the current MRP.

The Pole design will be added as Appendix 3-8 to the approved permit.

R645-301-742.300

Table 8 of appendix 7-4, shows design summaries of ditches 5a, 5b, and 5c, but a note at the bottom indicates that these ditches will be removed. If these ditches will be removed, the design summary for these sections of ditches should also be removed.

Table 8 of Appendix 7-4 has been revised removing the design of 5a, 5b, and 5c. TJS

Plate 7-5 displays an undisturbed watershed, UA-6c, but it is not included in the relevant revised tables of appendix 7-4.

Tables 1, 3, 5 have been updated with information on watershed UA-6c. TJS

Table 2 indicates that DA-15a will be changed to DA-15, but this information has not been updated on plate 7-5. DA-18b is still on plate 7-5 but is no longer in Table 2. The plates and tables should be consistent.

Plate 7-5 has been revised changing DA-15a to DA-15. As far as I can see, DA-18b is shown in both Plate 7-5 and Table 2 and is also shown in all other tables for ditch information. TJS.

Changes have been made to the disturbed area watersheds, but the sediment yield calculations found on page 45 of appendix 7-4 have not been updated. Please ensure that the correct sediment yield calculations are included in this table.

Sediment yield calculations were updated. TJS

R645-301-121.700

Plate 7-5 was updated to display changes to culverts and ditches, as well as changes to watershed boundaries at the facility. Plates 7-2, 7-6, 7-6a, and 7-6b should be updated to include relevant updated information as well.

Plate 7-6 is not a current plate in the M&RP. Plates 7-2, 7-6a, and 7-6b have been updated to reflect information on Plate 7-5.

Plate 7-2 and 7-6b show disturbed area watersheds that will be outdated if the changes shown on plate 7-5 are approved.

Plates 7-2 and 7-6b have been updated to reflect information on Plate 7-5.

Plate 7-6 and 7-6a display sediment pond #1 and, and its associated features. These maps should be consistent, but currently display different ditches, inlets and culvert alignments.

Plate 7-6 is not part of the current permit application. This is shown in the Table of Contents of the M&RP. It was replaced in April 2008 by Plate 7-6a. Plate 7-6 was for the proposed pond and had not been updated, so it was removed and replaced. Plate 7-6a is an updated drawing representing the existing pond and the ditches, inlets, and culvert alignments that are currently planned. TJS

R645-301-121.200

As plate 7-5 currently is shown, it is very difficult to view the exact locations of ditches and culverts due to the large amount of information on this plate. This plate should either be clarified or split into multiple plates.

Plate 7-5 has been cleaned=up to make it more readable. TJS

APPLICATION FOR PERMIT PROCESSING

Permit Change ☐	New Permit ☐	Renewal ☐	Transfer ☐	Exploration ☐	Bond Release ☐	Permit Number: ACT/007/013
Title of Proposal: Replace ditches with Culvert, Power Lines (14-005)						Mine: Horse Canyon
Task ID# 4712						Permittee: UtahAmerican Energy, Inc.

Description, include reason for application and timing required to implement.

Instructions: *If you answer yes to any of the first 8 questions (gray), submit the application to the Salt Lake Office. Otherwise, you may submit it to your reclamation*

☐ Yes	☐ No	1. Change in the size of the Permit Area? _____ acres Disturbed Area? _____ acres ☐ increase ☐ decrease.
☐ Yes	☐ No	2. Is the application submitted as a result of a Division Order? DO #
☐ Yes	☐ No	3. Does application include operations outside a previously identified Cumulative Hydrologic Impact Area?
☐ Yes	☐ No	4. Does application include operations in hydrologic basins other than as currently approved?
☐ Yes	☐ No	5. Does application result from cancellation, reduction or increase of insurance or reclamation bond?
☐ Yes	☐ No	6. Does the application require or include public notice/publication?
☐ Yes	☐ No	7. Does the application require or include ownership, control, right-of-entry, or compliance information?
☐ Yes	☐ No	8. Is proposed activity within 100 feet of a public road or cemetery or 300 feet of an occupied dwelling?
☐ Yes	☐ No	9. Is the application submitted as a result of a Violation? NOV #
☐ Yes	☐ No	10. Is the application submitted as a result of other laws or regulations or policies? Explain:
☐ Yes	☐ No	11. Does the application affect the surface landowner or change the post mining land use?
☐ Yes	☐ No	12. Does the application require or include underground design or mine sequence and timing? (Modification of R2P2?)
☐ Yes	☐ No	13. Does the application require or include collection and reporting of any baseline information?
☐ Yes	☐ No	14. Could the application have any effect on wildlife or vegetation outside the current disturbed area?
☐ Yes	☐ No	15. Does application require or include soil removal, storage or placement?
☐ Yes	☐ No	16. Does the application require or include vegetation monitoring, removal or revegetation activities?
☐ Yes	☐ No	17. Does the application require or include construction, modification, or removal of surface facilities?
☐ Yes	☐ No	18. Does the application require or include water monitoring, sediment or drainage control measures?
☐ Yes	☐ No	19. Does the application require or include certified designs, maps, or calculations?
☐ Yes	☐ No	20. Does the application require or include subsidence control or monitoring?
☐ Yes	☐ No	21. Have reclamation costs for bonding been provided for?
☐ Yes	☐ No	22. Does application involve a perennial stream, a stream buffer zone or discharges to a stream?
☐ Yes	☐ No	23. Does the application affect permits issued by other agencies or permits issued to other entities?

X Attach 3 complete copies of the application.

I hereby certify that I am a responsible official of the applicant and that the information contained in this application is true and correct to the best of my information and belief in all respects with the laws of Utah in reference to commitments, undertakings, and obligations, herein.

R. Jay Marshall 12/30/14
Signed - Name - Position - Date

Subscribed and sworn to before me this 30th day of December, 19 2014

Linda Kerns
Notary Public

My Commission Expires: 03.27.17
Attest: STATE OF Utah
COUNTY OF Carbon

LINDA KERNS
NOTARY PUBLIC • STATE of UTAH
COMMISSION # 683615
COMM. EXP. 03/27/2017

Received by Oil, Gas & Mining

ASSIGNED TRACKING NUMBER

Application for Permit Processing
Detailed Schedule of Changes to the MRP

Replace ditches with Culvert, Power Lines (14-005) Deficiencies to 14-002 Task ID# 4712	Permit Number: ACT/007/013 Mine: Horse Canyon Permittee: UtahAmerican Energy, Inc.

Provide a detailed listing of all changes to the mining and reclamation plan which will be required as a result of this proposed permit application. Individually list all maps and drawings which are to be added, replaced, or removed from the plan. Include changes of the table of contents, section of the plan, pages, or other information as needed to specifically locate, identify and revise the existing mining and reclamation plan. **Include page, section and drawing numbers as part of the description.**

			DESCRIPTION OF MAP, TEXT, OR MATERIALS TO BE CHANGED
☐ ADD	☐ REPLACE	☐ REMOVE	Chapter 3 Page 5 with new Page 5
☐ ADD	☐ REPLACE	☐ REMOVE	Chapter 5 Pages 8, 10,14,and 15 with new Pages 8, 10, 14, and 15.
☐ ADD	☐ REPLACE	☐ REMOVE	Appendix 3-8 to the end of Appendix 3-7
☐ ADD	☐ REPLACE	☐ REMOVE	Appendix 7-4 in its entirety
☐ ADD	☐ REPLACE	☐ REMOVE	Plate 5-2 with new Plate 5-2
☐ ADD	☐ REPLACE	☐ REMOVE	Plate 7-2 with new Plate 7-2
☐ ADD	☐ REPLACE	☐ REMOVE	Plate 7-5 with new Plate 7-5
☐ ADD	☐ REPLACE	☐ REMOVE	Plate 7-6a with new Plate 7-6a
☐ ADD	☐ REPLACE	☐ REMOVE	Plate 7-6b with new Plate 7-6b
☐ ADD	☐ REPLACE	☐ REMOVE	
☐ ADD	☐ REPLACE	☐ REMOVE	
☐ ADD	☐ REPLACE	☐ REMOVE	
☐ ADD	☐ REPLACE	☐ REMOVE	
☐ ADD	☐ REPLACE	☐ REMOVE	
☐ ADD	☐ REPLACE	☐ REMOVE	
☐ ADD	☐ REPLACE	☐ REMOVE	
☐ ADD	☐ REPLACE	☐ REMOVE	
☐ ADD	☐ REPLACE	☐ REMOVE	
☐ ADD	☐ REPLACE	☐ REMOVE	
☐ ADD	☐ REPLACE	☐ REMOVE	
☐ ADD	☐ REPLACE	☐ REMOVE	
☐ ADD	☐ REPLACE	☐ REMOVE	

Any other specific or special instructions required for insertion of this proposal into the Mining and Reclamation Plan?

WordPerfect Document Compare Summary

Original document: D:\DATA\Lila\Correspondance\2014\Submittals\14-002 Culvert Power Realignment\Chapter 3 13-003.wpd
Revised document: D:\DATA\Lila\Correspondance\2014\Submittals\14-002 Culvert Power Realignment\Chapter 3 14-002.wpd
Deletions are shown with the following attributes and color:
~~Strikeout~~, Blue RGB(0,0,255).
Deleted text is shown as full text.
Insertions are shown with the following attributes and color:
Double Underline, Redline, Red RGB(255,0,0).

The document was marked with 1 Deletion, 1 Insertion, 0 Moves.

sources or riparian areas in either the current permit area or the proposed addition, and according to verbal information from UEI's consultant, there are few, if any, willows or similar riparian-type vegetation associated with the seeps and springs in the proposed addition to the permit area. There may have been a few willows or shrubs, but there were no dense patches as would be required by southwestern willow flycatchers.

Lila Canyon Mine will have ~~below-ground~~both below and above ground electrical power lines. These lines will be constructed to minimize potential hazards to all raptors new to the site, all will be designed and constructed in accordance with the guidelines set forth in Environmental Criteria for Electric Transmission Systems or as approved by DOGM.

322.220. The permit area for Lila Canyon Mine is located within the Price River Resource Area. Surface water in the adjacent areas drains into Grassy Trail Creek and Cottonwood Wash, both tributaries of the Price River. The environment around the 42.6 acre mine site is within the Upper Sonovan life zone. The dominate Vegetation communities within the proposed disturbed area are pinyon-juniper and grass-shrub. Community types surrounding the proposed disturbed area are primarily pinyon-juniper, mixed conifer, spruce-fir, grass, and sagebrush-grass.

The Upper Sonovan life zone can provide habitat for approximately one hundred and forty-two species of wildlife. Two separate reports by the Utah Division of Wildlife Resources (DWR) identify species having potential to inhabit the region. The species that is considered to be of high interest in the local area is the Pronghorn. Pronghorns are found as year-long residents within and adjacent to the permit area. These

WordPerfect Document Compare Summary

Original document: D:\DATA\Lila\Correspondance\2014\Submittals\14-002 Culvert Power Realignment\Chapter 5 11-008.wpd
Revised document: D:\DATA\Lila\Correspondance\2014\Submittals\14-002 Culvert Power Realignment\14-002 To DOGM\Chapter 5 14-002.wpd
Deletions are shown with the following attributes and color:
~~Strikeout~~, Blue RGB(0,0,255).
Deleted text is shown as full text.
Insertions are shown with the following attributes and color:
Double Underline, Redline, Red RGB(255,0,0).

The document was marked with 5 Deletions, 6 Insertions, 0 Moves.

operation this section does not apply.

520. Operation Plan.

At first glance it would appear to a non-mining person that the best access to UEI's leases would be from the existing (sealed) Horse Canyon portals using the current Horse Canyon surface disturbance. However, the existing Horse Canyon site is not suitable for a large longwall operation. The old Horse Canyon Mine was not designed to produce 4.5 million tons as will be Lila. Some strategic pillars in the old mains were extracted upon retreat preventing any future access. The number of entries in the old works are not adequate for ventilation purposes. Portions of the old mine are flooded preventing reentry. The distance from the old portals to the current leases would result in unacceptable travel times for crews and supplies. Rehabilitating and maintaining an old mine is extremely hazardous and expensive. As a result of the conditions described above it has been determined that new portals at the Lila Canyon site is the most logical and only feasible access to the permittee's coal leases.

Mine Facilities List
Lila Canyon Mine

A list of new structures and facilities follows:

Buildings

1) Office/Bathhouse
2) Shop Warehouse
3) Security Shack

Utilities

4) Mine Substation
5) ~~Under Ground~~Surface Power Lines
6) Water Treatment Plant
7) Potable Water Tank
8) Process Water tank
9) Sewer Tank
10) Drain Field

Mine Facilities

11) Ventilation Fan

100' by 12". The facility will be designed to accommodate up to 200 employees working rotating shifts.

Shop Warehouse

The shop warehouse building is shown on plate 5-2. Parts and supplies consumed during the mining process will be stored in the warehouse to be issued as needed. The shop area will be used to perform minor equipment repairs and overhauls. The shop warehouse will be a prefab modular type building approximately 100' by 150' and will rest on a 4" concrete pad.

Security Shack

The Security Shack shown of Plate 5-2, when used will provide security to the mine site. The security shack will be used primarily at times when the mine is not in production. Security may be provided to protect the public from hazards associated with a mine site and to protect company property from unauthorized use. The security shack will be approximately 10' by 20' by 8'` and will be of prefab construction and will rest on a 4" concrete slab.

Mine Substation

The mine substation will be located as shown on Plate 5-2 will proved power to surface and underground areas of the mine property. The substation will comprise of approximately four transformers setting on a concrete pad approximately 20' by 20' by 12" and fully fenced. The total area of the substation is approximately 40' by 40'. Power will be fed into the transformers at 46 KVA and will be transformed down to usage voltages for both the surface and underground facilities. It is anticipated that voltages of 110, 220, 440 will be used on the surface and 12,470 volts will be utilized underground. The mine substation will be constructed in a way to fulfill all appropriate MSHA regulations.

Underground Power Lines

Within the disturbed area ~~it is anticipated all~~both surface and underground power lines will be ~~underground~~utilized. Underground lines will be run where feasible. As builds will be provided. Underground Power Lines will be left in place upon reclamation.

Water Treatment Plant

Coal Storage Bin

The coal storage bin is part of the truck loadout and is shown of Plate 5-2. The coal storage bin is where crushed coal is stored waiting to be loaded into coal haul trucks. The bin provides for surge capacity and allows for better control of crushing time. The coal storage bin provides for a enclosed dry location for temporary crushed coal storage. Coal is delivered from the crusher to the coal storage bin by use of a 60" covered surface conveyor running at a speed of approximately 700 FPM. The preliminary layout is shown on Plates 5-2 and 5-8.

Coal Stacking Tube.

The final design for the coal stacking tube is not yet complete. Preliminary design indicates that the stacking tube will be approximately 15' Diameter and approximately 80 feet high. Standard practice is to construct the tube of either concrete or steel. The preliminary layout is shown on Plates 5-2 and 5-8.

Culverts

A complete list and design for the culverts can be found in Appendix 7-4 Tables 9 and 10, and are shown on Plate 7-2. A summary of the culverts follows:

Culvert	Length	Size	
DC-1		30'	18"
DC-2		65'	18"
DC-3		33'	18"
DC-4		135'	18"
DC-5		50'	18"
DC-6		80'	24"
DC-7		110'	18"
DC-8		85'	24"
DC-9		35'	18"
DC-10		~~55'~~	~~18"~~ Removed due to Regrading
DC-11		~~65'~~	~~18"~~ Removed due to Regrading
DC-12		50'	18"
DC-13		30'	24"
DC-14		60'	18"
DC-15		60'	18"
DC-16		60'	18"
DC-17		75'	18"
DC-18		35'	18"
DC-19		40'	18"
DC-20		40'	18"
DC-21		270'	24"
DC-22		106'	24"
DC-23		154"	24"

DC-24	165'	24"
DC-25	430'	24"
Sp2-1	165'	18"
DC-26	75'	24"
UC-1	480'	60"

Guard Rails

Approximately 1,520 feet of Guard rails will be installed on the mine access road according to the detailed engineering plan being prepared. Appropriate MSHA and UDOT requirements will be taken into consideration.

Underground Pipes

Locations of the underground pipes have yet to be determined. Once detailed engineering design is completed the underground pipes will be added to Plate 5-2 or other appropriate Plates. Under ground pipes will be left in place upon reclamation.

Chain Link Fence

Approximately 1,500' of a six foot high chain link fence will be constructed as shown on Plate 5-2. The fence will be constructed to protect the public, and proved security along the section of county road that runs adjacent to the property.

Non-Coal Waste Area

An area for non-coal waste has been identified on Plate 5-2. Non-coal waste such as papers, timbers, cans, and miscellaneous scrap that is brought to the surface will be disposed of in a metal bin or "dumpster" located in the non-coal waste area identified on Plate 5-2. Metal will be separated from other forms of trash for salvage. Material not salvageable will be transported to the East Carbon Development Corporation (ECDC) dump or other approved disposal site for permanent disposal. Once a dumpster has reached capacity, the full dumpster will be replaced with an empty dumpster, and then the full dumpster will be hauled by a contract hauler to the specified disposal site.

Equipment & Supplies Storage Area

WordPerfect Document Compare Summary

Original document: D:\DATA\Lila\Correspondance\2014\Submittals\14-005 Responce to 14-002\Appendix 7-4 12-002.wpd
Revised document: D:\DATA\Lila\Correspondance\2014\Submittals\14-005 Responce to 14-002\14-005 Appendix 7-4-TJS.wpd
Deletions are shown with the following attributes and color:
~~Strikeout~~, Blue RGB(0,0,255).
Deleted text is shown as full text.
Insertions are shown with the following attributes and color:
Double Underline, Redline, Red RGB(255,0,0).

The document was marked with 748 Deletions, 727 Insertions, 0 Moves.

October 2014 TJS

2.2 Flow

Peak flows, flow depths, areas and velocities were calculated using the computer program "Office of Surface Mining Watershed Model", Storm, Version 6.21 by Gary E. McIntosh. All flows are based on the SCS - TR55 Method for both SCS 6-hour and NOAA Type II, 24-hour storms.

Time of concentration of storm events were calculated for each drainage area using the SCS upland curve method included as part of the Storm software. For the undisturbed areas UA-1 and UA-4 the watershed type was set at forested and the curve condition was set at bare ground. For UA-5, UA-6a and UA-6b and all DA watersheds, the watershed type was set as disturbed and the curve condition was set at bare ground.

2.3 Velocity

Flow velocities for each ditch structure were also calculated using the Storm computer program with Manning's Formula:

$$V = \frac{1.49}{n} R^{2/3} S^{1/3}$$

where:

V	=	Velocity (fps)
R	=	Hydraulic Radius (ft.)
S	=	Slope (ft. per ft.)
n	=	Manning's n; Table 3.1, p. 159,

"Applied Hydrology and Sedimentology for Disturbed Areas", Barfield, Warner & Haan, 1983.

Note: The following Manning's n were used in the calculations:

Structure	Manning's n
Culverts (cmp)	0.025
Unlined Disturbed Area Ditches	0.035

2.4 Drainage Areas

All drainage areas were ~~planimetered~~determined directly from ~~either~~ Plate 7-1, "Permit Area Hydrology Map", ~~and~~ Plate 7-2, "Disturbed Area Hydrology/Watershed", or Plate 7-5 "Proposed Sediment Control".

2.5 Slopes, Lengths

All slopes and lengths were measured directly from the topography on Plates 7-1 ~~and~~, 7-2, and/or 7-~~2~~5.

2.6 Runoff Volume

Runoff was calculated using the SCS Formula for NOAA Type II, 24-hour storms; using the Storm Version 6.21 computer program:

$$Q = \frac{(P - 0.2\,S)^2}{P + 0.8\,S}$$

where:

CN	=	Runoff Curve Number
Q	=	Runoff in inches
P	=	Precipitation in inches
S	=	$\frac{1000}{CN} - 10$

2.7 Runoff Curve Numbers

Two curve numbers were utilized for the undisturbed areas. Areas with milder slopes (less than 30%) were given a runoff curve number of 75. All other undisturbed areas (30% slope or greater) were given a runoff curve number of 83. These numbers were taken directly from the approved "Mining and Reclamation Plan, Horse Canyon Mine, Emery County, Utah, Volume III", submitted by I.P.A. The numbers in that plan were based on vegetation and soils data from on-site.

Two other runoff curve numbers have been used in the calculations. A runoff CN of 90 is used for all disturbed areas (including the areas designated as undisturbed which lie within the disturbed area boundary (~~S~~see Plate 7-2), and a runoff CN of 95~~3~~ is used for paved areas. These numbers are based on commonly used and approved values and from Table 2.20, (p. 82, Barfield, et al, 1983).

The following is a summary of runoff curve numbers used in these calculations:

Watershed	Runoff CN
Undisturbed (<30% slopes):	75
Undisturbed (>30% slopes):	83
Disturbed:	90
Paved:	95~~3~~

2.8 Culvert Sizing

Minimum culvert sizing is based on the either the inlet control nomograph or Manning's Equation. Culverts were evaluated for inlet control conditions to determine the minimum pipe size using the Culvert Nomograph included as Figure 1 of this Appendix. If the pipe had a HW/D ratio equal to or greater than 1.0 or the slope were less than 2% the ~~Haestad Methods, Flowmaster~~Hydraulic Toolbox, Version 64.0 or later version computer program was used to determine the pipe flow diameter using:

$$D = \left(\frac{2.16\ Q\ n}{\sqrt{s}}\right)^{0.35}$$

where:	D	=	Required Diameter (feet)
	Q	=	QP = Peak Discharge (cfs)
	n	=	Roughness Factor (0.025 for CMP)
	S	=	Slope (ft. per ft.)

2.9 Culverts

Culverts have been sized according to the calculations previously described, and are shown on Plate 7-5, "Proposed Sediment ~~Control Map"~~Control". Culverts carrying undisturbed drainages are designated with UC- Letters (i.e. UC-1). All undisturbed area drainage culverts will be fitted with trash racks to minimize plugging by rocks or other debris.

Trash racks will be provided at the inlet for all undisturbed drainage culverts. These will consist of 3/4" steel bars welded on 6" centers across the flared inlet structures of each culvert. Bars will be sloped from the front of the inlet structure up to the top of the culvert. This ramp configuration will allow trash, branches and other potential obstructions to be swept up and away from the inlet rather than being impinged against the grates during a flow event. Rip rap will be placed around the flared inlet structure and above it to a height of at least 6" above the required headwall for each culvert. (See Figure 4 for details). Trash racks will be checked on a routine schedule and following precipitation events and all trash, branches and other obstructions will be removed.

It should be noted that all undisturbed area culverts are adequately sized to handle the expected runoff from a 100 year - 6 hour event for maximum protection of the mine area, sediment pond and undisturbed drainage. This is well in excess of the 10 year - 6 hour event required by the regulations and is proposed as an extra measure of safety.

Disturbed area culverts and ditches are shown on the ~~"Sediment Control Map"~~"Proposed Sediment Control", Plate 7-5. Culverts carrying disturbed drainage are designated with a DC-number (i.e. DC-1). Calculations for all disturbed area culverts and ditches are also included with this report, along with design criteria. Disturbed drainage areas draining to culverts and ditches are marked with a DA-number (i.e. DA-1). Undisturbed drainage areas are marked with a UA-number (i.e. UA-1).

Culverts will be inspected regularly, and cleaned as necessary to provide for passage of drainage flows. Inlets and outlets shall also be maintained so as to prevent plugging or undue restriction of water flow.

All disturbed area culverts are temporary, and will be removed upon final reclamation.

2.10 Main Canyon Culvert - Outlet Structure

The outlet of culvert UC-1 has been designed to flow onto a rip-rap apron to protect against souring and to allow for energy dissipation. The rip-rap apron is designed to fit the natural channel configuration as closely as possible, and will allow runoff to re-enter the natural channel at a reduced velocity which is no greater than natural flow conditions. Runoff from the 100 year - 6 hour precipitation event in the canyon below the minesite has been calculated at 52.32 cfs, including sediment pond overflow.

2.11 Ditches

All ditches will carry disturbed area drainage to the pond. Ditches are shown on the ~~Proposed~~"Proposed Sediment ~~Control Map~~Control", Plate 7-5, and are designated with a DD-number (i.e. DD-1 for Disturbed Area Ditches) or UD-number (i.e. UD-1 for Undisturbed Area Ditches).

All ditches are designed to carry the expected runoff from a 10 year - 6 hour event with a minimum freeboard of 0.5' (See Table 8 and Figure 3).

Ditches which exhibit expected flow velocities of 5 fps or greater will be lined with rip-rap. A typical cross-section is shown on Figure 3 and flow depths and areas for all lined and unlined ditches are presented in Table 8 of this report.

Ditch slopes have been determined from Plates 7-2 and 7-5.

All ditches will be inspected regularly, and maintained to the minimum dimensions to provide adequate capacity for the design flow. All ditches are temporary and will be removed as described under the reclamation hydrology section. (Section 4)

TABLE 1

Undisturbed Watershed Summary		
Watershed	Drains To	Final
UA-1	UC-1	Right Fork Lila Canyon
UA-2a	DD-~~2~~7	Sediment Pond
~~UA-4~~UA-2b	DD-1	Sediment Pond
UA-4	Sediment Pond	~~UA-5DD-20~~Sediment Pond
UA-5a	DD-20	Sediment Pond
UA-5b	UA-1	By-Pass Culvert
UA-6a	DD-~~12~~7	Sediment Pond
UA-6b	DD-1~~1~~	Sediment Pond
UA-6c	DD-7	Sediment Pond
UA-8	ASCA Area	Left Fork Lila Canyon

TABLE 2

Disturbed Watershed Summary		
Watershed	Drains To	Final
DA-1a	DD-1a	Sediment Pond
DA-1b	DD-1b	Sediment Pond
DA-1c	DD-~~1c~~5a	Sediment Pond
DA-~~2a~~3	DD-~~2a~~3	Sediment Pond
DA-~~2b~~5a	~~DD-2b~~DD-5a & DC-20	Sediment Pond
DA-~~2c~~5b	~~DD-2c~~DC-22	Sediment Pond
DA-~~3~~5c	~~DD-3~~DC-23	Sediment Pond
DA-~~4a~~5d	~~DD-4a~~DC-24	Sediment Pond
DA-~~4b~~5e	~~DD-4b~~DC-25	Sediment Pond
DA-~~4c~~6a	~~DD-4c~~DC-21	Sediment Pond
DA-~~5a~~6b	DD-~~5a~~6b	Sediment Pond
DA-~~5b~~6c	DD-~~5b~~6c	Sediment Pond
DA-~~5c~~7	~~DD-5c~~DD-7 & DC-7	Sediment Pond
DA-~~6~~8a	DD-~~6~~8a	Sediment Pond
DA-~~6~~8b	DD-~~6~~8b	Sediment Pond
DA-~~6c~~9	DD-~~6c~~9	Sediment Pond
DA-~~7~~10	DD-~~7~~10	Sediment Pond
DA-~~8a~~11	DD-~~8a~~11	Sediment Pond
~~DA-8bDD-8bSediment PondDA-~~	~~DD-10Sediment PondDA-11DD-~~	Sediment Pond
DA-13~~a~~b	DD-13~~a~~b	Sediment Pond
DA-13~~b~~c	DD-13d	Sediment Pond
DA-13~~c~~d	DD-13e	Sediment Pond
UA-5 (future)	DD-20	Sediment Pond
DA-14a	DD-14a	Sediment Pond~~2~~
DA-14b	DD-14b	Sediment Pond~~2~~
DA-15~~a~~	DD-15~~a~~	Sediment Pond~~2~~
DA-1~~5b~~6a	DD-1~~5b~~6a	Sediment Pond~~2~~
DA-16~~a~~b	DD-16~~a~~b	Sediment Pond~~2~~
DA-1~~6b~~7a	DD-1~~6b~~7a	Sediment Pond~~2~~
DA-17~~a~~b	DD-17~~a~~b	Sediment Pond~~2~~
DA-1~~7b~~8a	DD-1~~7b~~8a	Sediment Pond~~2~~
~~DA-18aDD-18aSediment Pond~~	DD-18b	Sediment Pond~~2~~
Fan Portal	ASCA Area	Right Fork Lila Canyon
TS-1	Topsoil Berm	Sediment Pond
POND	Sediment Pond	Sediment Pond

TABLE 3

Watershed Parameters					
Watershed	Area (Acre)	Hydraulic Length (ft.)	Elevation Change (ft.)	% Slope	CN
Undisturbed Watersheds					
UA-1	248.82	9475	2020	21.3~~1~~2	75
~~UA-2~~UA-2a	7.66	~~10.011500~~1360	1000	~~66~~74.26	83
UA-2b	4.06	660	410	62.~~67~~12	83
UA-4	14.08	1950	595	30.51	83
UA-5a	~~2~~1.~~64~~05	~~650~~330	35	~~5~~9.86	90
UA-5b	1.~~38~~44	600	45	7.50	90
UA-6a	1.~~50~~13	230	80	34.78	90
UA-6b	0.40	90	30	33.33	90
UA-6c	0.44	340	170	50.00	90
UA-8	0.~~37~~54	100	30	30.00	90
Disturbed Watersheds					
DA-1a	~~0~~1.~~33~~13	6~~8~~60	~~15222~~85	12.~~35~~88	9~~5~~0
DA-1b	0.~~3142048~~38	~~11.4395DA-~~	~~DA-~~	15.~~10~~62	9~~5~~0
DA-3	0.~~30~~25	170	16	9.41	90
~~DA-~~	0.~~07~~70	~~180~~480	~~24~~53	11.04	~~13.3395~~93
DA-5b	~~0~~1.~~33~~1~~2~~5	~~1411.20~~430	26	6.05	9~~0~~3
DA-5c	0.29	166	36	21.69	93
DA-5d	0.42	~~570~~390	~~54~~46	11.79	~~9~~93
DA-5e	0.~~47~~18	285	30	10.53	9~~5~~3
DA-6a	0.~~28~~74	245	50	20~~0~~.41	~~5427.0090~~83
DA-6b	~~3~~2.3~~5~~4	760	70	9.21	90
DA-6c	2.51	690	70	10.14	90
DA-7	2.68	630	3~~0~~5	~~4~~5.~~76~~56	95
DA-8a	0.26	284	54	19.01	90
DA-8b	0.~~76~~63	670	52	7.~~8090DA-~~	90
DA-9	0.05	~~50~~100	~~6~~11	1~~2~~1.00	9~~5~~3
DA-10	2.~~89~~10	715	40	5.59	~~700202.86~~9~~5~~3
DA-11	0.~~78~~82	~~340~~480	~~16~~22	4.~~70~~58	9~~5~~3
DA-13a	1.~~97470~~94	770	24	3.12	~~2.5595DA-13b0.4928041.4~~ ~~3~~93

~~90DA-13c0.40460224.7890~~

TABLE 3 (Continued)

Watershed Parameters					
Watershed	Area (Acre)	Hydraulic Length (ft.)	Elevation Change (ft.)	% Slope	CN
Disturbed Watersheds					
DA-13b	1.36	450	75	16.67	83
DA-13c	0.49	375	40	10.67	90
DA-13d	0.40	460	22	4.78	90
DA-14a	0.36	390	34	8.7~~1~~2	95
DA-14b	0.75	540	16	2.96	95
DA-15~~a~~	~~0.38~~1.02	810	58	~~525509~~7.~~5295D~~	95
DA-16a	0.16	370	10	2.70	95
DA-16b	0.09	210	13	6.19	95
DA-17a	0.42	610	19	3.11	95
DA-17b	0.07	100	5	5.00	95
DA-18a	0.07	175	6	3.43	95
DA-18b	0.44	650	24	3.69	95
Fan Portal	0.60	195	25	12.8~~0~~2	90
TS-1	2.95	660	38	5.7~~5~~6	83
POND 1	1.92	380	50	13.16	~~95~~100
POND 2	0.24	50	8	16.00	100

TABLE 5

Runoff Summary Watershed Drainage to Sediment Pond				
Watershed	10 yr. / 6 hr. Peak Flow-cfs	25 yr. / 6 hr. Peak Flow-cfs	10 yr. / 24 hr. Peak Flow-cfs	10 yr. / 24 hr. Volume-ac-ft
Undisturbed Watersheds draining to Pond #1				
UA-2a	~~2~~0.~~11~~98	1.51	3.~~11~~29	~~6~~0.~~11~~40
UA-2b	0.~~5~~54	0.83	1.80	0.21
UA-4	3.14	4.65	9.20	0.74
~~UA-5~~UA-5a	0.43	0.56	0.88	0.09
UA-5b	0.68	0.87	1.~~28~~38	~~1.64~~2.~~41~~0.~~22~~12
UA-6a	0.47	0.60	0.95	0.12
UA-6b	0.10	0.13	0.21	0.03
UA-6c	0.23	0.30	0.47	0.04
Disturbed Watersheds ~~draining to Pond #1~~				
DA-1a	0.~~22~~52	0.~~26~~66	1.05	0.~~370.04~~10
DA-1b	0.~~200.240.330.04D~~	0.19	0.~~02DA-2a0.61~~31	0.~~731.~~03
~~0.11DA-~~	0.11	0.14	0.21	0.03
~~DA-4a~~DA-5a	0.~~060.080.110.02D~~	0.~~420.51~~49	0.7~~1~~2	0.07
DA-5~~a~~b	0.~~05~~68	0.~~06~~84	1.23	0.~~090.01~~12
DA-5~~b~~c	0.1~~1~~2	0.1~~4~~5	0.21	0.03
DA-5~~c~~d	0.~~29~~22	0.28	0.41	0.04
DA-5e	0.09	0.~~35~~11	0.~~49~~17	0.0~~5~~2
DA-6a	~~0.09~~0.12	0.18	0.35	0~~2~~.04
DA-6b	1.60	2.06	3.27	0.28
DA-6c	1.18	1.52	2.40	0.21
DA-7	1.98	2.39	3.36	0.31
DA-8a	0.10	0.12	0.19	0.02
DA-8b	0.36	0.47	0.74	0.06
~~DA-~~	0.04	0.05	0.07	0.01
DA-10	~~2~~1.36	1~~9~~.68	2.~~653.73~~49	0.~~33~~21
DA-11	0.~~52~~50	0.62	0.~~630.89~~92	0.0~~9~~8
DA-13a	1.~~46~~26	1.~~76~~56	2.~~47~~30	0.2~~3~~0
DA-13b	0.2~~3~~6	0.~~30~~38	0.75	0.07
DA-13c	0.20	0.26	0.4~~7~~1	0.04
DA-13~~c~~d	0.19	0.24	0.38	0.03
TS-1	0.65	0.96	1.90	0.15
POND 1	1.18	1.42	1.99	0.22
~~TOTAL~~POND 2	~~28~~0.~~2~~23	0.27	0.35	~~4.17~~0.04

TABLE 5 (Continued)

Runoff Summary Watershed Drainage to Sediment Pond				
Watershed	10 yr. / 6 hr. Peak Flow-cfs	25 yr. / 6 hr. Peak Flow-cfs	10 yr. / 24 hr. Peak Flow-cfs	10 yr. / 24 hr. Volume-ac-ft
Disturbed Watersheds ~~not draining to Pond #1~~				
Fan Portal	0.21	0.27	0.40	0.43
~~Disturbed~~	0.23	0.28	0.39	0.04
DA-14b	0.56	0.67	0.95	0.09
DA-15~~a~~	0.~~26~~76	0.~~31~~91	~~0~~1.~~440.04DA-~~	0.~~670.07~~12
DA-16a	0.11	0.14	0.19	0.02
DA-16b	0.06	0.07	0.10	0.01
DA-17a	0.31	0.38	0.53	0.05
DA-17b	0.05	0.06	0.09	0.01
DA-18a	0.06	0.07	0.10	0.01
DA-18b	0.33	0.40	0.56	0.05

~~TOTAL2.860.39~~

TABLE 6

Runoff Control Structure Watershed Summary		
Structure	Type	Contributing Watersheds/Structures
UC-1	Culvert	UA-1, Fan Portal, Sediment Pond Overflow
DD-1a	Ditch	DA-1a
DC-1	Culvert	DD-1a & UA-2b
DD-1b	Ditch	~~DD-1a~~DC-1, DA-1b, UA-6b
DC-2	Culvert	DD-1b
DD-~~1c~~3	Ditch	~~DC-2, DA-1c~~DA-3
DC-4	Culvert	Replaced DD-3
DD-~~2~~5a	Ditch	DA-~~2~~5a, ~~UA-2~~DC-2, DC-4
DC-20	Culvert	~~DD-2b~~DD-5a
DD-6a	Ditch	~~DD-2a,~~ DA-~~2b~~6a
DC-21	Culvert	~~DD-2b, UA-2DD-2cDitch~~DD-6a
~~DC-1~~DC-22	Culvert	DC-20, DC-21, DA-~~2c~~5b
DC-23	Culvert	~~DD-2cDD-3Ditch~~DC-22, DA-~~3~~5c
DC-24	Culvert	~~DD-3DD-4aDitchDA-4aDD-4bDitchDD-4a, DC-4, DA-4bDC-20CulvertDD-4bDD-4cDitch~~DC-20~~3~~, DA-~~4c~~5d
DC-~~9~~4	Culvert	~~DD-4cDD-5aDitchDA-5a~~DD-5b
DD-5b	Ditch	~~DD-5a, DA-5b~~DC-4
DC-5	Culvert	DD-5b
DD-5c	Ditch	DC-5~~, DA-5cDC-10CulvertDD-5c, DC-9DD-6aDitchDC-3, DD-1c, DA-6a~~
DC-6	Culvert	DD-~~6a~~5c
~~DD-6b~~DC-25	~~Ditch~~Culvert	DC-6, ~~DA-6b~~DC-24
DD-6b	Ditch	DA-6b
DD-6c	Ditch	DA-6c
DC-8	Culvert	DD-6b, DD-6c

TABLE 6

Runoff Control Structure Watershed Summary		
Structure	Type	Contributing Watersheds/Structures
DD-7	Ditch	DA-7, UA-6a, UA-6c
DC-7	Culvert	DD-7
DD-8a	Ditch	DA-8a
DD-8b	Ditch	DD-8a, DC-7, DA-8b
~~DD-8cDitchDD-8b, DC-8*, DA-8c~~DD-9	Ditch	~~DC-10, DD-5c,~~ DA-9
DC-~~11~~9	Culvert	DD-9
DD-10	Ditch	DA-10
DC-12	Culvert	DD-10
DD-11	Ditch	DA-11
~~DD-12DitchDD-7, UA-6a~~DD-13a	Ditch	~~DC-11,~~ DA-13a
DD-13b	Ditch	DD-13a, DD-11
DD-13c	Ditch	DD-13b, DC-12
DD-13d	Ditch	DD-13c, ~~DD-8c, DD-13b~~DA-13b, DA-13c
DC-13	Culvert	DD-13d
DD-13e	Ditch	DC-13, DA-13~~c~~d
DD-14a	Ditch	DA-14a
DD-14b	Ditch	DA-14b
DC-14	Culvert	DD-14a, DD-14b
DD-15~~a~~	Ditch	~~DA-15aDD-15bDitchDD-15a, DA-15b~~DA-15
DC-19	Culvert	DD-15~~b~~
DD-16a	Ditch	DA-16a
DC-15	Culvert	DD-16a

TABLE 6

Runoff Control Structure Watershed Summary		
Structure	Type	Contributing Watersheds/Structures
DD-16b	Ditch	DC-15, DA-16b
DD-17a	Ditch	DA-17a
DC-16	Culvert	DD-17a
DD-17b	Ditch	DC-16, DC-14, DA-17b
DC-17	Culvert	DD-17b, DD-16b
DD-18a	Ditch	DA-18a
DC-18	Culvert	DD-18a
DD-18b	Ditch	DC-18, DA-18b
DD-20	Ditch	DC-8, UA-5~~*~~a

Ditches DD-2, DD-4, DD-12 & ~~19~~DD-19 do not exist.

~~* DD-20 receives discharge from DC-8 during high flows which may overflow DD-8b and DD-8c and UA-5~~

Removed with changes in the overall plan

TABLE 7

Runoff Control Structure Flow Summary					
Structure	Type	10yr. / 6hr. Peak Flow-cfs	25yr. /6hr. Peak Flow-cfs	10yr. / 24hr. Peak Flow-cfs	~~25yr. / 6hr. Peak Flow-cfs~~100yr. / 6hr. Peak Flow-cfs
UC-1*	Culvert	35.46	38.82	54.07	~~38.82~~49.09
DD-1a	Ditch	0.~~22~~52	0.~~37~~66	~~0~~1.05	- -
DC-1	Culvert	1.06	1.49	2~~6~~.85	- -
DD-1b	Ditch	1.31	1.81	3.37	- -
DC-2	Culvert	1.31	1.81	3.37	- -
DD-3	Ditch	0.11	0.14	0.21	- -
DC-4	Culvert	0.11	0.14	0.21	- -
DD-5a	Ditch	1.81	2.44	4.30	- -
DC-20	Culvert	1.81	2.44	4.30	- -
DD-6a	Ditch	0.12	0.18	0.35	- -
DC-21	Culvert	0.12	0.18	0.35	- -
DC-22	Culvert	2.61	3.46	5.88	- -
DC-23	Culvert	2.73	3.61	6.09	- -
DC-24	Culvert	2.95	3.89	6.50	- -
DC-4	Culvert	0.09	0.11	0.17	- -
DD-5b	Ditch	0.09	0.11	0.17	- -
DC-5	Culvert	0.09	0.11	0.17	- -
DD-5c	Ditch	0.09	0.11	0.17	- -
DC-6	Culvert	0.09	0.11	0.17	- -
DC-25	Culvert	3.04	4.00	6.67	- -
DD-6b	Ditch	1.60	2.06	3.27	- -
DD-6c	Ditch	1.18	1.52	2.40	- -
DC-8	Culvert	2.78	3.58	5.67	- -
DD-7	Ditch	2.55	3.12	4.52	- -

TABLE 7

Runoff Control Structure Flow Summary					
Structure	Type	10yr. / 6hr. Peak Flow-cfs	25yr. /6hr. Peak Flow-cfs	10yr. / 24hr. Peak Flow-cfs	~~25yr. / 6hr. Peak Flow-cfs~~100yr. / 6hr. Peak Flow-cfs
DC-7	Culvert	2.55	3.12	4.52	- -
DD-8a	Ditch	0.10	0.12	0.19	- -
DD-8b	Ditch	3.01	3.71	5.45	- -
DD-9	Ditch	0.04	0.05	0.07	- -
DC-9	Culvert	0.04	0.05	0.07	- -
DD-10	Ditch	1.36	1.68	2.49	- -
DC-12	Culvert	1.36	1.68	2.49	- -
DD-11	Ditch	0.~~52~~50	0.62	0.92	- -
DD-13a	Ditch	1.26	1.56	2.30	- -
DD-13b	Ditch	1.76	2.18	3.22	- -
DD-13c	Ditch	3.12	3.86	5.71	- -
DD-13d	Ditch	3.58	4.50	6.87	- -
DC-13	Culvert	3.58	4.50	6.87	- -
DD-13e	Ditch	3.77	4.74	7.25	- -
DD-14a	Ditch	0.23	0.28	0.39	- -
DD-14b	Ditch	0.56	0.67	0.95	- -
DC-14	Culvert	0.79	0.95	1.34	- -
DD-15	Ditch	0.76	0.91	1.28	- -
DC-19	Culvert	0.~~63~~76	0.91	1.28	- -
DD-16a	Ditch	0.11	0.14	0.19	- -
DC-15	Culvert	0.11	0.14	0.19	- -
DD-16b	Ditch	0.17	0.21	0.29	- -
DD-17a	Ditch	0.31	0.38	0.53	- -

TABLE 7

Runoff Control Structure Flow Summary					
Structure	Type	10yr. / 6hr. Peak Flow-cfs	25yr. /6hr. Peak Flow-cfs	10yr. / 24hr. Peak Flow-cfs	~~25yr. / 6hr. Peak Flow-cfs~~100yr. / 6hr. Peak Flow-cfs
~~DC-2Culvert0.520.910.63--DD-1cDitch0.631.100.77--DD-2aDitch2.727.143.84--DD-2bDitch2.817.293.94--DC-1Culvert2.817.293.94--DD-2cDitch2.857.373.99--DC-3Culvert2.857.373.99--DD-3Ditch0.110.210.14--DC-4Culvert0.110.210.14--DD-4aDitch0.060.110.08--DD-4bDitch0.240.440.30--DC-20Culvert0.240.440.30--DD-4cDitch0.661.150.81--DC-9Culvert0.6~~	Culvert	0.31	0.~~53~~38	0.~~38~~53	- -

TABLE 7

Runoff Control Structure Flow Summary					
Structure	Type	10yr. / 6hr. Peak Flow-cfs	25yr. /6hr. Peak Flow-cfs	10yr. / 24hr. Peak Flow-cfs	~~25yr. / 6hr. Peak Flow-cfs~~100yr. / 6hr. Peak Flow-cfs
DD-17b	Ditch	~~1~~0.~~15~~53	~~1~~0.63	0.~~96~~1.~~39~~90	- -
DC-17	Culvert	~~1~~3.~~32~~74	~~2~~4.~~25~~84	~~1~~7.~~60~~86	- -
DD-18a	Ditch	0.06	0.07	0.10	- -
DC-18	Culvert	0.06	0.07	~~- -DC-18Culvert 0.06~~0.10	~~0.07~~- -
DD-18b	Ditch	0.39	0.~~66~~47	0.~~47~~66	- -
DD-20	Ditch	~~5.7213~~3.~~22~~1	~~7~~4.14	6~~9~~.55	- -
DC-26	Culvert	4.89	6.22	9.80	- -

Ditches DD-2, DD-4, DD-12 & ~~19~~DD-19 do not exist. Removed with changes in the overall plan

* UC-1flow values includes sum of peak flows for UA-1 from Table 4 and 25yr-6hr Sediment Pond 1 peak flow of 28.22 cfs & Fan Portal flow from Table 5.

TABLE 8

Disturbed Ditch Design Summary

Ditch	DD-1a	DD-1b	DD-1c*	DD-2a*	DD-2b*	DD-2c*
Slope (%)	11.42	11.20	~~10.00~~	~~12.06~~	~~10.29~~	~~14.29~~
Length (ft.)	~~68342020~~ ~~680~~378	3~~50~~27	~~105~~			
Manning's No.	0.035	0.0~~35~~40	~~0.035~~	~~0.035~~	~~0.035~~	~~0.035~~
Side Slope (H:V)	2:1	2:1	~~2:1~~	~~2:1~~	~~2:1~~	~~2:1~~
*Bottom Width (ft.)	0.00	~~0~~1.~~00~~50	~~0.00~~	~~2.00~~	~~2.00~~	~~2.00~~
Peak Flow 10/6 (cfs)	0.~~220.~~52	~~0~~1.~~632.72~~ ~~2.81~~31	~~2.85~~			
Peak Flow 10/24 (cfs)	1.05	3.37	~~0.91~~	~~1.10~~	~~7.14~~	~~7.297.37~~
Flow Depth (ft.) 10/6	0.~~200.~~27	0.~~30~~19	~~0.23~~	~~0.24~~	~~0.22~~	
Flow Depth (ft.) 10/24	0.~~24~~35	0.3~~4~~3	~~0.37~~	~~0.39~~	~~0.42~~	~~0.38~~
Flow Area (ft.^{2}) 10/6	0.~~080.~~15	0.~~18~~37	~~0.56~~	~~0.61~~	~~0.55~~	
Flow Area (ft.^{2}) 10/24	0.~~11~~25	0.~~23~~71	~~0.27~~	~~1.10~~	~~1.18~~	~~1.06~~
Velocity (fps) 10/6	~~2.84~~3.~~49~~5 2	3.5~~1~~7	~~4.81~~	~~4.61~~	~~5.18~~	
Velocity (fps) 10/24	~~3~~4.2~~3~~0	4.~~024.046 .496.18~~78	~~6.96~~			
Rip-Rap Req'd (Y/N)	N	~~N~~Y	~~N~~	~~N~~	~~N~~	~~Y~~
Rip-Rap D_{50}	-	~~-~~3"	-	~~-~~	~~-~~	~~6"~~

Note: Slope/Lengths from Plate 7-2.

* DD-1c, DD-2a, DD-2b, DD-2c removed due to grading changes

TABLE 8 (Continued)

Disturbed Ditch Design Summary							
Ditch	DD-3	DD-4a*	DD-4b*	DD-4c*	DD-5a	DD-5b	DD-5c
Slope (%)	0.60	~~11.00~~	~~10.26~~	~~10.00~~	~~13.11~~	~~11.11~~	~~9.52~~
Length (ft.)	~~1711002 7358018 3126~~176	~~567~~					
Manning's No.	0.035	~~0.035~~	~~0.035~~	~~0.035~~	~~0.035~~	~~0.035~~	~~0.035~~
Side Slope (H:V)	2:1	~~2:1~~	~~2:1~~	~~2:1~~	~~2:1~~	~~2:1~~	~~2:1~~
*Bottom Width (ft.)	0.00	~~0.00~~	~~0.00~~	~~0.00~~	~~0.00~~	~~0.00~~	~~0.00~~
Peak Flow 10/6 (cfs)	0.11	~~0.06~~	~~0.24~~	~~0.66~~	~~0.05~~	~~0.16~~	~~0.45~~
Peak Flow 10/24 (cfs)	0.21	~~0.11~~	~~0.44~~	~~1.15~~	~~0.09~~	~~0.30~~	~~0.79~~
Flow Depth (ft.) 10/6	0.~~260.12 0.210.30~~ 20	~~0.11~~	~~0.18~~	~~0.27~~			
Flow Depth (ft.) 10/24	0.~~340.15 0.~~26	~~0.38~~	~~0.14~~	~~0.22~~	~~0.33~~		
Flow Area (ft.^{2}) 10/6	0.~~14~~08	~~0.03~~	~~0.09~~	~~0.19~~	~~0.02~~	~~0.06~~	~~0.14~~
Flow Area (ft.^{2}) 10/24	0.~~23~~13	~~0.05~~	~~0.14~~	~~0.28~~	~~0.04~~	~~0.10~~	~~0.22~~
Velocity (fps) 10/6	~~0~~1.~~792.0 22.793.5 5~~35	~~2.06~~	~~2.59~~	~~3.17~~			
Velocity (fps) 10/24	~~0~~1.~~932.3 53.244.0 82.39~~59	~~3.04~~	~~3.65~~				
Rip-Rap Req'd (Y/N)	N	~~N~~	~~N~~	~~N~~	~~N~~	~~N~~	~~N~~
Rip-Rap D_{50}	-	~~-~~	~~-~~	~~-~~	~~-~~	~~-~~	~~-~~
Note: Slope/Lengths from Plate 7-2.							

* DD-4a, DD-4b, DD-4c, DD-5a, DD-5b, & DD-5c Removed

TABLE 8 (Continued)

Disturbed Ditch Design Summary							
Ditch	DD-6a	DD-6b	DD-6c	DD-7	DD-8a	DD-8b	DD-8c*
Slope (%)	~~18~~6.~~00~~4 0	~~2~~0.5~~6~~0	3.38	1.08	20.42	7.81	~~10.34~~
Length (ft.)	2~~0~~20	~~507~~278	~~532~~363	370	284	666	~~406~~
Manning's No.	0.~~0400.~~0 35	0.035	0.035	0.035	0.035	0.040	
Side Slope (H:V)	2:1	2:1	2:1	2:1	2:1	2:1	~~2:1~~
*Bottom Width (ft.)	~~3~~0.00	~~1~~0.00	1.00	1.00	0.00	1.00	~~2.00~~
Peak Flow 10/6 (cfs)	~~2~~0.12	1.~~944.54~~ 60	1.18	2.~~45~~55	0.10	~~2~~3.~~91~~01	~~6.12~~
Peak Flow 10/24 (cfs)	~~7~~0.~~55~~35	~~10~~3.~~82~~2 7	2.40	4.~~31~~52	0.19	5.~~24~~45	~~14.03~~
Flow Depth (ft.) 10/6	0.~~190.60~~ ~~0.28~~18	0.~~55~~75	0.46	0.77	0.13	0.~~37~~59	~~0.41~~
Flow Depth (ft.) 10/24	0.~~32~~26	0.9~~0~~7	0.~~41~~61	0.~~72~~95	0.17	0.~~49~~74	~~0.63~~
Flow Area (ft.^{2}) 10/6	0.~~62~~06	1.~~32~~11	0.4~~5~~3	1.1~~5~~8	0.03	0.~~63~~70	~~1.14~~
Flow Area (ft.^{2}) 10/24	0.14	1.~~172.52~~ 90	0.7~~5~~3	1.~~75~~81	0.06	~~0.98~~1.10	~~2.07~~
Velocity (fps) 10/6	~~4~~1.~~713~~9 6	1.4~~3~~4	2.~~64~~74	2.1~~2~~6	2.90	4.~~59~~28	~~5.35~~
Velocity (fps) 10/24	~~6~~2.~~47~~57	~~4~~1.~~29~~73	3.2~~1~~7	2.~~46~~50	3.40	~~5~~4.~~37~~97	~~6.78~~
Rip-Rap Req'd (Y/N)	~~Y~~N	N	N	N	N	Y	
Rip-Rap D_{50}	~~6"~~-	-	-	-	-	~~6~~3"	
Note: Slope/Lengths from Plate 7-2.							

* DD-8c Removed

TABLE 8 (Continued)

Disturbed Ditch Design Summary							
Ditch	DD-9	DD-10	DD-11	DD-13a	DD-13b	DD-13c	DD-13d
Slope (%)	10.00	3.~~02~~12	5.06	2.53	3.23	3.30	1.25
Length (ft.)	50	6~~96~~73	336	474	62	38	278
Manning's No.	0.035	0.035	0.035	0.035	0.035	0.035	0.035
Side Slope (H:V)	2:1	2:1	2:1	2:1	2:1	2:1	2:1
*Bottom Width (ft.)	0.00	1.00	0.00	1.00	1.00	1.00	3.00
Peak Flow 10/6 (cfs)	0.04	~~2~~1.~~19~~36	0.~~52~~50	1.26	1.72	3.~~06~~12	3.58
~~5.776.35~~Peak Flow 10/24 (cfs)	0.07	~~3~~2.~~73~~49	0.~~89~~92	2.30	3.22	5.~~27~~71	6.~~169.89~~ ~~14.50~~87
Flow Depth (ft.) 10/6	0.11	0.~~40~~50	0.32	0.50	0.5~~1~~4	0.6~~3~~7	0.~~57~~85
Flow Depth (ft.) 10/24	0.13	0.~~53~~62	0.39	0.6~~5~~3	0.6~~6~~8	0.8~~2~~4	~~0.89~~1.08
Flow Area (ft.^{2}) 10/6	0.02	0.~~73~~49	0.20	0.~~991.02~~ 51	0.58	0.90	1.44
~~2.36~~Flow Area (ft.^{2}) 10/24	0.03	~~1~~0.~~08~~79	0.~~3~~31	0.79	0.93	1.~~481.52~~ 42	2.~~154.25~~ 35
Velocity (fps) 10/6	1.76	~~3~~2.~~00~~75	2.57	2.50	2.~~59~~96	3.~~083.51~~ 4.~~01~~6	2.~~69~~49
Velocity (fps) 10/24	2.03	3.~~46~~20	2.~~97~~99	2.90	3.~~55~~46	4.0~~5~~2	~~4~~2.~~613.4~~ ~~1~~93
Rip-Rap Req'd (Y/N)	N	N	N	N	N	N	N
Rip-Rap D_{50}	-	-	-	-	-	-	-
Note: Slope/Lengths from Plate 7-2.							

TABLE 8 (Continued)

Disturbed Ditch Design Summary							
Ditch	DD-13e	DD-14a	DD-14b	DD-15a	DD-15b*	DD-16a	DD-16b
Slope (%)	4.78	8.72	3.15	9.70	~~4.07~~	2.97	6.06
Length (ft.)	460	390	540	5~~25~~93	~~270~~	370	165
Manning's No.	0.035	0.035	0.035	0.035	~~0.035~~	0.035	0.035
Side Slope (H:V)	2:1	2:1	2:1	2:1	~~2:1~~	2:1	2:1
*Bottom Width (ft.)	3.00	0.00	0.00	0.00	~~0.00~~	0.00	0.00
Peak Flow 10/6 (cfs)	~~6~~3.~~54~~77	0.23	0.56	0.~~26~~79	~~0.66~~	0.11	0.17
Peak Flow 10/24 (cfs)	~~14~~7.~~88~~25	0.39	0.95	~~0.44~~1.~~11~~28		0.19	0.29
Flow Depth (ft.) 10/6	0.~~40~~67	0.21	0.36	0.~~22~~33	~~0.36~~	0.20	0.20
Flow Depth (ft.) 10/24	0.~~63~~86	0.26	0.43	0.~~26~~39	~~0.44~~	0.24	0.25
Flow Area (ft.^{2}) 10/6	~~1.52~~0.91	0.09	0.25	0.~~09~~22	~~0.26~~	0.08	0.08
Flow Area (ft.^{2}) 10/24	~~2~~1.~~68~~48	0.13	0.38	0.~~14~~31	~~0.38~~	0.12	0.12
Velocity (fps) 10/6	4.~~31~~17	2.59	2.21	~~2~~3.~~78~~68	~~2.54~~	1.44	2.10
Velocity (fps) 10/24	~~5~~4.~~54~~91	2.96	2.52	~~3~~4.1~~8~~5	~~2.89~~	1.65	2.40
Rip-Rap Req'd (Y/N)	N	N	N	N	~~N~~	N	N
Rip-Rap D_{50}	-	-	-	-	-	-	-
Note: Slope/Lengths from Plate 7-2.							

*DD-15b Combined with DD-15

TABLE 8 (Continued)

Disturbed Ditch Design Summary							
Ditch	DD-17a	DD-17b	DD-18a	DD-18b	DD-20		
Slope (%)	2.68	4.12	2.86	3.54	4.88		
Length (ft.)	485	97	175	650	737		
Manning's No.	0.035	0.035	0.035	0.035	0.035		
Side Slope (H:V)	2:1	2:1	2:1	2:1	2:1		
*Bottom Width (ft.)	0.00	0.00	0.00	0.00	0.00		
Peak Flow 10/6 (cfs)	0.31	10.1553	0.06	0.39	53.7221		
Peak Flow 10/24 (cfs)	0.53	10.960	0.10	0.66	136.2255		
Flow Depth (ft.) 10/6	0.29	0.44	0.16	0.30	0.7863		
Flow Depth (ft.) 10/24	0.36	0.5440	0.19	0.37	10.0782		
Flow Area (ft.^{2}) 10/6	0.17	0.39	0.05	0.18	10.2380		
Flow Area (ft.^{2}) 10/24	0.26	0.5933	0.07	0.27	21.306		
Velocity (fps) 10/6	1.80	2.93	1.22	2.11	4.6603		
Velocity (fps) 10/24	2.05	32.3576	1.39	2.41	54.7582		
Rip-Rap Req'd (Y/N)	N	N	N	N	N		
Rip-Rap D_{50}	-	-	-	-	-		
Note: Slope/Lengths from Plate 7-2.							

TABLE 9

Disturbed Culvert Design Summary						
Culvert	DC-1	DC-2	DC-3	DC-4	DC-5	DC-6
Slope (%)	13.33	10.77	~~3~~50.0~~3~~0	~~21~~10.50	1~~2~~0.~~005.0~~ ~~0~~50	10.50
Length (ft.)	30	65	~~33~~130	1~~3~~5	~~50~~20	~~80~~30
Manning's No.	0.025	0.025	0.025	0.025	0.025	0.025
Peak Flow 10/6 (cfs)	~~2~~1.~~810~~06	1.~~522.85~~3 1	0.11	0.~~16~~09	~~2~~0.~~94~~09	0.09
Peak Flow 10/24 (cfs)	~~7~~2.~~29~~85	~~0.917~~3.37	0.21	0.~~30~~17	0.17	~~7.55~~0.17
Diam. Proposed (ft.)	1.50	1.50	1.50	1.~~50~~25	1.~~50~~25	1.2~~.00~~5
Velocity (fps) 10/24	~~10~~8.00	7.7~~2~~8	5.~~315.944~~ ~~.35~~83	3.~~95~~26	~~7~~3.~~27~~26	3.26
Rip-Rap D_{50}	6"	6"	~~6~~3"	~~N/A~~-	~~N/A~~-	~~6"~~-

Note: Slope/Lengths from Plate 7-5.
Culverts DC-3, -4, -5, and -6 replaced by DC-20, -21, and -22
Velocity: (Haestad Methods, Flowmaster~~, Version 6.0~~ Program)

TABLE 9 (Continued)

Disturbed Culvert Design Summary						
Culvert	DC-7	DC-8	DC-9	DC-10*	DC-11*	DC-12
Slope (%)	46.40	38.80	~~5.70~~~~14.25~~ 4.60			4.00
Length (ft.)	110	85	~~35~~65	~~55~~	~~65~~	50
Manning's No.	0.025	0.025	0.025	~~0.025~~	~~0.025~~	0.025
Peak Flow 10/6 (cfs)	2.~~45~~55	~~5~~2.7~~2~~8	0.~~66~~04	~~1.11~~	~~1.60~~	2.19
Peak Flow 10/24 (cfs)	4.~~3113.22~~ 52	~~1~~5.~~15~~67	~~1~~0.~~94~~07	~~2.80~~		3.73
Diam. Proposed (ft.)	1.50	2.00	1.50	~~1.50~~	~~1.50~~	1.50
Velocity (fps) 10/24	14.~~05~~25	~~17.69~~14.~~5~~ ~~5~~27	~~7~~1.~~33~~82			5.~~445.60~~0 1
Rip-Rap D_{50}	12"	12"	~~N/A~~-	~~6"~~	~~6"~~	~~6~~3"

Note: Slope/Lengths from Plate 7-5.
Velocity: (Haestad Methods, Flowmaster~~, Version 6~~ Program)

* DC-10 and DC-11 Culverts removed due to grading changes.~~0)~~

TABLE 9 (Continued)

Disturbed Culvert Design Summary						
Culvert	DC-13	DC-14	DC-15	DC-16	DC-17	DC-18
Slope (%)	3.33	3.33	3.33	3.33	~~4~~9.~~00~~50	5.70
Length (ft.)	30	60	60	60	75	35
Manning's No.	0.025	0.025	0.025	0.025	0.025	0.025
Peak Flow 10/6 (cfs)	~~6~~3.~~35~~58	0.79	0.11	0.31	~~1~~3.~~32~~74	0.06
Peak Flow 10/24 (cfs)	~~14~~6.~~50~~87	1.34	0.19	0.53	~~2~~7.~~25~~86	0.10
Diam. Proposed (ft.)	2.00	1.50	1.~~50~~25	1.~~501.50~~25	2.00	1.50
Velocity (fps) 10/24	~~7~~6.~~34~~08	3.93	2.~~20~~26	3.06	9.22	2.~~994.872.19~~24
Rip-Rap D_{50}	~~6~~3"	~~N/A~~-	~~N/A~~-	~~N/A~~-	~~N/A~~12"	~~N/A~~-
Note: Slope/Lengths from Plate 7-5. Velocity: (Haestad Methods, Flowmaster~~, Version 6.0~~ Program)						

TABLE 9 (Continued)

Disturbed Culvert Design Summary						
Culvert	DC-19	DC-20	DC-21	DC-22	DC-23	DC-24
Slope (%)	2.50	9.63	3.40	28.30	7.79	6.06
Length (ft.)	40	270	250	106	154	165
Manning's No.	0.025	0.025	0.025	0.025	0.025	0.025
Peak Flow 10/6 (cfs)	0.76	1.81	0.12	2.61	2.73	2.95
Peak Flow 10/24 (cfs)	1.28	4.30	0.35	5.88	6.09	6.50
Diam. Proposed (ft.)	1.50	2.0	2.0	2.0	2.0	2.0
Velocity (fps) 10/24	3.50	7.79	2.56	12.51	7.99	4.98
Rip-Rap D_{50}	-	N/A	N/A	N/A	N/A	N/A

Note: Slope/Lengths from Plate 7-5.
Source: (Haestad Methods, Flowmaster Program)

TABLE 9 (Continued)

Disturbed Culvert Design Summary						
Culvert	DC-25	SP2-1	DC-26			
Slope (%)	8.2~~.50~~6	0.50	7.50			
Length (ft.)	430	165	75			
Manning's No.	0.025	0.025	0.025			
Peak Flow 10/6 (cfs)	3.0~~.66~~4	-	4.89			
Peak Flow 10/24 (cfs)	~~1~~6.~~11~~67	2.86*	9.80			
Diam. Proposed (ft.)	~~1~~2.~~50~~00	1.50	2.0			
Velocity (fps) 10/24	~~3~~8.3~~6~~7	2.39	9.00			
Rip-Rap D_{50}	~~N/A~~6"	N/A	6"			

Note: Slope/Lengths from Plate 7-5.
* SP2-1 Peak Flow is a 25/6 event
Source: (Haestad Methods, Flowmaster~~, Version 6.0~~ Program)

DESIGN OF SEDIMENT CONTROL STRUCTURES

Design Specifications:

3.1 Design and Construction Specifications for Sedimentation Pond
3.2 Sediment Yield
3.3 Sediment Pond Volume
3.4 Sediment Pond Summary

Tables:

Table 11 Sediment Pond Design
Table 12a Sediment Pond #1 - Stage Volume Data
Table 12b Sediment Pond #2 - Stage Volume Data
Table 13a Sediment Pond #1 - Stage Discharge Data
Table 13b Sediment Pond #2 - Stage Discharge Data

Figures:

Figure 5.4 Depth of 2-year, 6-hour rainfall - Barfield et al.
Figure 5.15 Slope-effect Chart - Barfield et al.

NOTE: **Sediment pond plans are based on the original final grading. During the interium Phase I period, not all drainage structures can be constructed. Therefore, a series of minor adjustments have been installed to make the system work on a temporary basis. These temporary measures will be replaced as part of the Phase II construction. As part of the Phase II construction, final plans will be prepared which will demonstrate the adequacy of the sediment pond structures.**

SEDIMENT YIELD CALCULATIONS - USLE - Drainages to Sediment Pond ~~#1~~s

Drainage	R	K	~~Acres~~Area (ac)	Slope Length ~~Feet~~(Ft)	Slope (%)	LS	CP	A (T/ac)	Yield (ac-ft)
DA-1a	14.34	0.500	~~0~~1.~~33~~13	6~~8~~60	~~22.35~~12.	5~~0~~.15	1.20	~~107~~44.~~5~~	0.~~0163~~0
DA-1b	14.34	0.500	0.3~~1~~8	~~420~~365	~~11.433.3~~	5.19	1.20	~~28.390.~~	0.0078
DA-3	14.34	0.500	0.~~30~~25	170	9.41	1.6~~0~~2	1.20	13.~~77~~98	0.0019~~6~~
DA-~~4~~5a	14.34	0.500	0.~~14100~~	480	1~~2~~1.0~~0~~4	~~1~~3.~~80~~4	1.20	~~15~~29.~~49~~	0.00~~10~~9
DA-~~4~~5b	14.34	0.500	~~0~~1.1~~2~~5	~~270~~430	~~10.372~~6.	1.40	1.20	~~20.650~~1	0.0064
DA-5~~a~~c	14.34	0.500	0.~~07~~29	~~18013.33~~	21.~~80~~69	5.97	1.20	~~24.09~~51	0.00~~0~~68
~~DA-~~	14.34	0.500	0.42	~~570~~390	~~9.47~~11.7	3.~~00~~45	1.20	2~~5~~9.~~81~~6	0.~~0050~~0
DA-5e	14.34	0.500	0.18	285	10.53	2.48	1.20	21.38	0.0018
DA-6a	14.34	0.500	0.74	2~~8~~45	20~~0~~.41	~~27.009~~	1.20	~~81.74~~56	0.01~~05~~9
DA-6b	14.34	0.500	~~3~~2.3~~5~~4	7~~1~~60	9.21	3.~~20~~33	1.20	2~~7~~8.~~53~~6	0.~~0423~~0
DA-6c	14.34	0.500	2.51	690	10.14	3.6~~0~~5	1.20	3~~0~~1.~~97~~4	0.03~~57~~6
DA-7	14.34	0.500	2.68	630	~~4~~5.~~76~~56	1.~~25~~52	1.20	1~~0~~3.~~76~~1	0.01~~32~~6
DA-8a	14.34	0.500	0.26	284	19.01	~~4~~6.~~80~~2	1.20	~~41.30~~54	0.00~~49~~6
DA-8b	14.34	0.500	0.~~76~~63	670	7.~~80~~76	2.4~~0~~5	1.20	~~20.65~~21	0.~~0072~~
DA-9	14.34	0.500	0.05	~~50~~100	1~~2~~1.00	1.~~35~~57	1.20	1~~1~~3.~~62~~5	0.0003
DA-10	14.34	0.500	2.~~89~~10	715	5.59	~~7002~~1.	0.01	0.~~03~~12	0.000~~0~~1
DA-11	14.34	0.500	0.~~78~~82	~~340~~480	4.~~70~~58	0.8~~5~~7	1.20	7.~~31~~49	0.0026~~8~~
DA-13a	14.34	0.500	1.~~97470~~	770	~~2.55~~3.12	0.~~38~~69	0.01	0.0~~3~~5	0.0000
DA-13b	14.34	0.500	~~0~~1.~~4928~~	450	~~1~~16.67	6.~~43~~40~~:~~	1.20	~~1~~55.~~89~~0	0.0~~00~~34
DA-13c	14.34	0.500	0.49	375	10.67	2.91	1.20	25.01	0.0056
DA-13d	14.34	0.500	0.40	460	4.78	~~1~~0.~~05~~9	1.20	~~9~~7.~~03~~74	0.~~0017~~0
DA-14a	14.34	0.500	0.36	390	8.72	2.20	1.20	18.95	0.0031
DA-14b	14.34	0.500	0.75	50	2.96	0.23	1.20	1.97	~~UA-~~
DA-15	14.34	0.500	~~10.0115~~	810	7.16	2.41	1.20	20.73	0.0097
DA-16a	14.34	0.500	0.16	370	2.70	0.38	1.20	3.29	0.0002
DA-16b	14.34	0.500	0.09	210	6.19	1.01	1.20	8.69	0.0004
DA-17a	14.34	0.500	~~66~~0.42	610	3.11	0.~~67~~63	1.20	5.42	0.0010
DA-17b	14.34	0.500	0.07	~~75~~100	5.00	0.~~15~~53	1.20	4.58	0.0001
DA-18a	14.34	0.500	0.07	175	~~80~~3.43	0.42	1.20	3.63	0.0001
DA-18b	14.34	0.500	0.44	650	3.69	0.77	1.20	6.64	0.0013
UA-2a	14.34	0.500	7.66	1360	74.26	112.10	0.~~3707~~	120.56	0.4240
UA-2b	14.34	0.500	4.06	660	62.12	62.05	0.15	66.73	0.1244
UA-4	14.34	0.500	14.08	1950	~~47.7650~~	35.92	0.15	~~53~~38.~~78~~	0.~~3476~~2
UA-6a	14.34	0.500	1.~~45~~13	230	34.7~~0~~8	15.~~00~~2	0.15	16.~~13~~42	0.~~0107~~0
UA-6b	14.34	0.500	0.40	90	33.33	8.9~~:00~~1	0.15	9.~~68~~59	0.0018
	1434	0.~~9491~~	0.44	340	50.~~ft.)~~	32.~~847~~	0.15	35.17	0.0071

* Disturbed Runoff / Uncompacted Area

** Paved Areas

~~SEDIMENT YIELD CALCULATIONS - USLE - Sediment Pond #2~~
~~DrainageRKAcresSlope Length FeetSlope (%)LSCPAYieldDA-~~
~~14a14.340.5000.363908.712.251.2019.360.0032DA-~~
~~14b14.340.5000.755402.960.441.203.790.0013DA-~~
~~15a14.340.5000.385259.523.401.2029.250.0051DA-~~
~~15b14.340.5000.622704.440.621.205.330.0015DA-~~
~~16a14.340.5000.163702.700.381.203.270.0002DA-~~
~~16b14.340.5000.092106.191.051.209.030.0004DA-~~
~~17a14.340.5000.426103.110.501.204.300.0008DA-~~
~~17b14.340.5000.071005.000.541.204.650.0002DA-~~
~~18a14.340.5000.071753.430.401.203.440.0001DA-~~
~~18b14.340.5000.446503.690.651.205.590.0011Total0.014~~
~~Total Sediment 1 year (ac.ft.) . . . . . 0.014~~

~~Total Sediment 3 years (ac. ft.) . . . . . 0.042~~
~~* Disturbed Runoff / Uncompacted Area~~
~~** Paved Areas~~

3.3 Sediment Pond Volume

The volumes shown in Tables 11a and 11b are from the volumes calculated from the precipitation, runoff and sediment yield for a 10 year-24 hour precipitation event. The volumes were calculated based on the disturbed areas (and contributing undisturbed areas) runoff values, developed using the design parameters described in this section.

sources or riparian areas in either the current permit area or the proposed addition, and according to verbal information from UEI's consultant, there are few, if any, willows or similar riparian-type vegetation associated with the seeps and springs in the proposed addition to the permit area. There may have been a few willows or shrubs, but there were no dense patches as would be required by southwestern willow flycatchers.

Lila Canyon Mine will have both below and above ground electrical power lines. These lines will be constructed to minimize potential hazards to all raptors new to the site, all will be designed and constructed in accordance with the guidelines set forth in Environmental Criteria for Electric Transmission Systems or as approved by DOGM.

322.220. The permit area for Lila Canyon Mine is located within the Price River Resource Area. Surface water in the adjacent areas drains into Grassy Trail Creek and Cottonwood Wash, both tributaries of the Price River. The environment around the 42.6 acre mine site is within the Upper Sonovan life zone. The dominate Vegetation communities within the proposed disturbed area are pinyon-juniper and grass-shrub. Community types surrounding the proposed disturbed area are primarily pinyon-juniper, mixed conifer, spruce-fir, grass, and sagebrush-grass.

The Upper Sonovan life zone can provide habitat for approximately one hundred and forty-two species of wildlife. Two separate reports by the Utah Division of Wildlife Resources (DWR) identify species having potential to inhabit the region. The species that is considered to be of high interest in the local area is the Pronghorn. Pronghorns are found as year-long residents within and adjacent to the permit area. These

operation this section does not apply.

520. Operation Plan.

At first glance it would appear to a non-mining person that the best access to UEI's leases would be from the existing (sealed) Horse Canyon portals using the current Horse Canyon surface disturbance. However, the existing Horse Canyon site is not suitable for a large longwall operation. The old Horse Canyon Mine was not designed to produce 4.5 million tons as will be Lila. Some strategic pillars in the old mains were extracted upon retreat preventing any future access. The number of entries in the old works are not adequate for ventilation purposes. Portions of the old mine are flooded preventing reentry. The distance from the old portals to the current leases would result in unacceptable travel times for crews and supplies. Rehabilitating and maintaining an old mine is extremely hazardous and expensive. As a result of the conditions described above it has been determined that new portals at the Lila Canyon site is the most logical and only feasible access to the permittee's coal leases.

Mine Facilities List
Lila Canyon Mine

A list of new structures and facilities follows:

Buildings

1) Office/Bathhouse
2) Shop Warehouse
3) Security Shack

Utilities

4) Mine Substation
5) Surface Power Lines
6) Water Treatment Plant
7) Potable Water Tank
8) Process Water tank
9) Sewer Tank
10) Drain Field

Mine Facilities

11) Ventilation Fan

100' by 12". The facility will be designed to accommodate up to 200 employees working rotating shifts.

Shop Warehouse

The shop warehouse building is shown on plate 5-2. Parts and supplies consumed during the mining process will be stored in the warehouse to be issued as needed. The shop area will be used to perform minor equipment repairs and overhauls. The shop warehouse will be a prefab modular type building approximately 100' by 150' and will rest on a 4" concrete pad.

Security Shack

The Security Shack shown of Plate 5-2, when used will provide security to the mine site. The security shack will be used primarily at times when the mine is not in production. Security may be provided to protect the public from hazards associated with a mine site and to protect company property from unauthorized use. The security shack will be approximately 10' by 20' by 8'` and will be of prefab construction and will rest on a 4" concrete slab.

Mine Substation

The mine substation will be located as shown on Plate 5-2 will proved power to surface and underground areas of the mine property. The substation will comprise of approximately four transformers setting on a concrete pad approximately 20' by 20' by 12" and fully fenced. The total area of the substation is approximately 40' by 40'. Power will be fed into the transformers at 46 KVA and will be transformed down to usage voltages for both the surface and underground facilities. It is anticipated that voltages of 110, 220, 440 will be used on the surface and 12,470 volts will be utilized underground. The mine substation will be constructed in a way to fulfill all appropriate MSHA regulations.

Underground Power Lines

Within the disturbed area both surface and underground power lines will be utilized. Underground lines will be run where feasible. As builds will be provided. Underground Power Lines will be left in place upon reclamation.

Water Treatment Plant

Coal Storage Bin

The coal storage bin is part of the truck loadout and is shown of Plate 5-2. The coal storage bin is where crushed coal is stored waiting to be loaded into coal haul trucks. The bin provides for surge capacity and allows for better control of crushing time. The coal storage bin provides for a enclosed dry location for temporary crushed coal storage. Coal is delivered from the crusher to the coal storage bin by use of a 60" covered surface conveyor running at a speed of approximately 700 FPM. The preliminary layout is shown on Plates 5-2 and 5-8.

Coal Stacking Tube.

The final design for the coal stacking tube is not yet complete. Preliminary design indicates that the stacking tube will be approximately 15' Diameter and approximately 80 feet high. Standard practice is to construct the tube of either concrete or steel. The preliminary layout is shown on Plates 5-2 and 5-8.

Culverts

A complete list and design for the culverts can be found in Appendix 7-4 Tables 9 and 10, and are shown on Plate 7-2. A summary of the culverts follows:

Culvert	Length	Size	
DC-1		30'	18"
DC-2		65'	18"
DC-3		33'	18"
DC-4		135'	18"
DC-5		50'	18"
DC-6		80'	24"
DC-7		110'	18"
DC-8		85'	24"
DC-9		35'	18"
DC-10		Removed due to Regrading	
DC-11		Removed due to Regrading	
DC-12		50'	18"
DC-13		30'	24"
DC-14		60'	18"
DC-15		60'	18"
DC-16		60'	18"
DC-17		75'	18"
DC-18		35'	18"
DC-19		40'	18"
DC-20		40'	18"
DC-21		270'	24"
DC-22		106'	24"
DC-23		154"	24"

DC-24	165'	24"
DC-25	430'	24"
Sp2-1	165'	18"
DC-26	75'	24"
UC-1	480'	60"

Guard Rails

Approximately 1,520 feet of Guard rails will be installed on the mine access road according to the detailed engineering plan being prepared. Appropriate MSHA and UDOT requirements will be taken into consideration.

Underground Pipes

Locations of the underground pipes have yet to be determined. Once detailed engineering design is completed the underground pipes will be added to Plate 5-2 or other appropriate Plates. Under ground pipes will be left in place upon reclamation.

Chain Link Fence

Approximately 1,500' of a six foot high chain link fence will be constructed as shown on Plate 5-2. The fence will be constructed to protect the public, and proved security along the section of county road that runs adjacent to the property.

Non-Coal Waste Area

An area for non-coal waste has been identified on Plate 5-2. Non-coal waste such as papers, timbers, cans, and miscellaneous scrap that is brought to the surface will be disposed of in a metal bin or "dumpster" located in the non-coal waste area identified on Plate 5-2. Metal will be separated from other forms of trash for salvage. Material not salvageable will be transported to the East Carbon Development Corporation (ECDC) dump or other approved disposal site for permanent disposal. Once a dumpster has reached capacity, the full dumpster will be replaced with an empty dumpster, and then the full dumpster will be hauled by a contract hauler to the specified disposal site.

Equipment & Supplies Storage Area

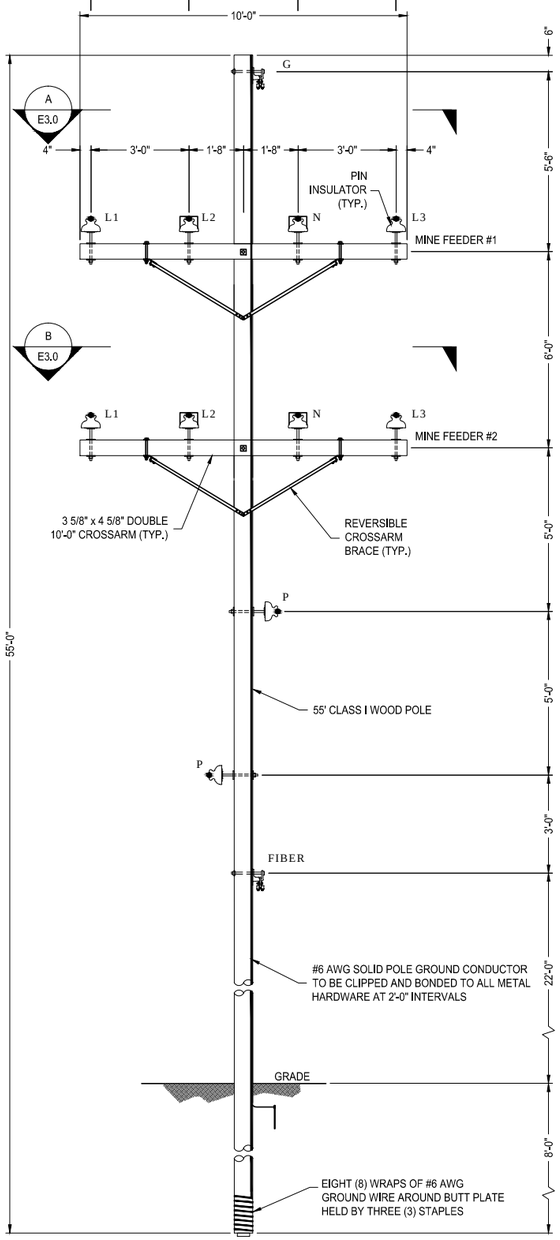

FRONT VIEW

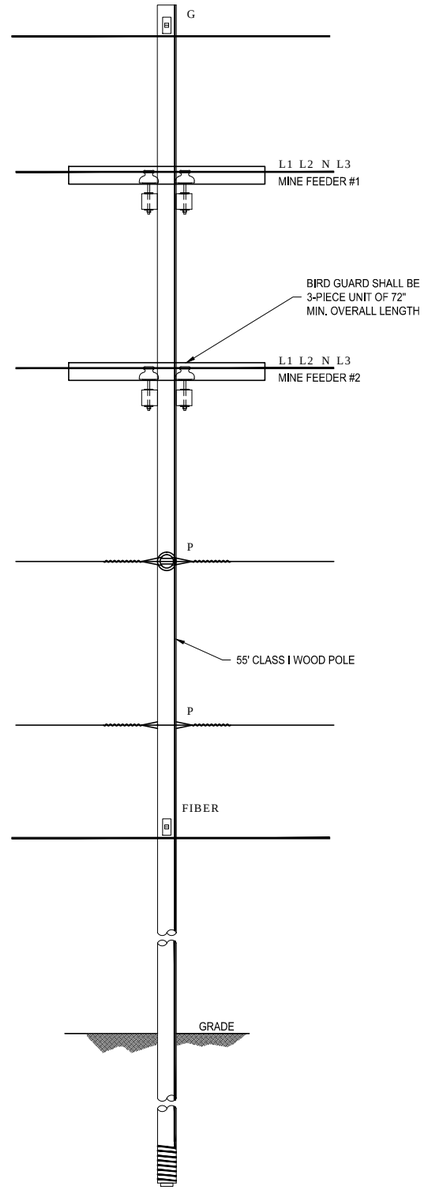

SIDE VIEW

1 E3.0 **12.47kV TANGENT POLE DETAIL**
SCALE: 1/2" = 1'-0"

POLE LINE CONDUCTOR AND CABLE SCHEDULE

CONDUCTOR AND CABLE REFERENCE LETTER	CONDUCTOR	POWER LINE CIRCUIT DESCRIPTION
L1	397.5 "LARK" ACSR	12.47kV PHASE CONDUCTOR
L2	397.5 "LARK" ACSR	12.47kV PHASE CONDUCTOR
L3	397.5 "LARK" ACSR	12.47kV PHASE CONDUCTOR
N	#4/0 AWG "PENGUIN"	NEUTRAL (MINE GROUND) CONDUCTOR
G	3/8" EHS	GROUND / STATIC CONDUCTOR
P	#2 "SPARATE" ACSR	PILOT CONDUCTOR
FIBER	24 STRAND, SINGLE-MODE FIBER OPTIC CABLE, ST CONNECTORS	FIBER OPTIC CABLE

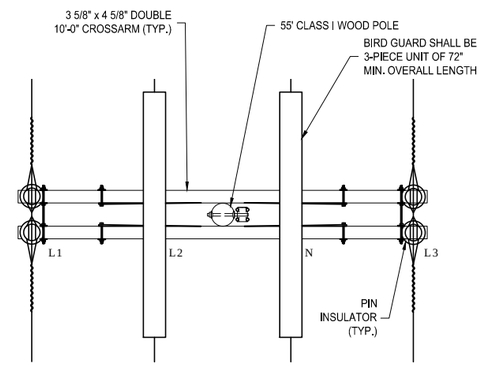

A E3.0 **UPPER CROSSARM MINE FEEDER #1 (SECTION A)**
SCALE: 5/8" = 1'-0"

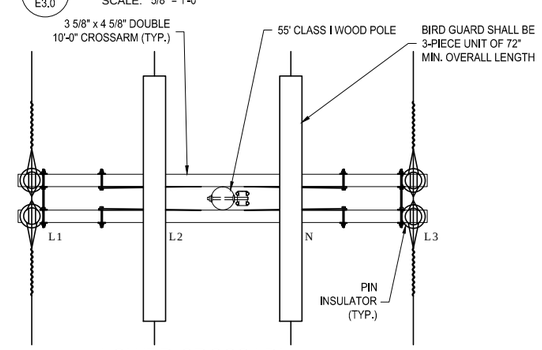

B E3.0 **LOWER CROSSARM MINE FEEDER #2 (SECTION B)**
SCALE: 5/8" = 1'-0"

DISTRIBUTION LINE WOOD STRUCTURE GROUNDING

ALL WOOD DISTRIBUTION STRUCTURES ARE TO BE GROUNDED. ALL WOOD POLES ARE TO BE INSTALLED WITH A BUTT PLATE AND A BUTT WRAP EXTENDING TWO FEET FROM THE BUTT.

THE FOOTING RESISTANCE IS TO BE MEASURED AT EACH STRUCTURE SITE. ON MULTIPLE POLE STRUCTURES, THE POLE GROUND WIRES MUST BE CUT ON ALL THE POLES OF THE STRUCTURE, AND ALL THE GROUND WIRES ON THE BUTT END OF THE POLES MUST BE BONDED TOGETHER PRIOR TO MEASURING THE STRUCTURE FOOTING RESISTANCE. THE POLE GROUND WIRE(S) MUST BE REPAIRED AFTER THE FOOTING RESISTANCE HAS BEEN MEASURED AND ANY ADDITIONAL GROUNDING ADDED.

STRUCTURE FOOTING RESISTANCE'S SHOULD BE 15 OHMS OR LESS.

THE FOLLOWING SEQUENCE SHOULD BE USED WHEN MEASURING STRUCTURE FOOTING RESISTANCE AND INSTALLING ADDITIONAL STRUCTURE GROUNDING.

1. MEASURE THE STRUCTURE FOOTING RESISTANCE. (FOLLOW INSTRUMENT MANUFACTURERS INSTRUCTIONS)
   A. IF THE STRUCTURE FOOTING RESISTANCE IS 15 OHMS OR LESS, RECORD THE STRUCTURE NUMBER AND STRUCTURE FOOTING RESISTANCE AND PROCEED TO THE NEXT STRUCTURE.
   B. IF THE STRUCTURE FOOTING RESISTANCE IS GREATER THAN 15 OHMS, GO TO STEP 2.
2. INSTALL A 5/8" X 10 FOOT SECTIONAL GROUND ROD AS SHOWN. ATTACH THE GROUND LEAD(S) FROM THE POLE GROUND WIRE TO THE GROUND ROD. [SPLIT BOLT CONNECTOR SHOULD BE USED FOR THE TEMPORARY GROUND ROD LEAD-POLE GROUND WIRE CONNECTION.]
3. MEASURE THE STRUCTURE FOOTING RESISTANCE.
   A. IF THE STRUCTURE FOOTING RESISTANCE IS 15 OHMS OR LESS, RECORD THE STRUCTURE NUMBER, STRUCTURE FOOTING RESISTANCE AND NUMBER OF GROUND RODS DRIVEN.
   B. (1) IF THE STRUCTURE FOOTING RESISTANCE IS LESS THAN ONE HALF OF THE PREVIOUS MEASUREMENT, BUT STILL EXCEEDS 15 OHMS GO TO STEP 2 AND INSTALL DEEP DRIVEN GROUND ROD. IF DEEP DRIVEN GROUND ROD CANNOT BE INSTALLED, INSTALL ANOTHER GROUND ROD IN A NEW LOCATION MAINTAINING 5 FEET MINIMUM DISTANCE FROM ONE POLE OR OTHER GROUND RODS. (MAXIMUM OF 3 GROUND RODS PER STRUCTURE).
   (2) IF THE STRUCTURE FOOTING RESISTANCE IS NOT REDUCED TO ONE HALF OR LESS OF THE PREVIOUS MEASUREMENT, RECORD THE STRUCTURE NUMBER, STRUCTURE FOOTING RESISTANCE AND NUMBER OF GROUND RODS DRIVEN.
4. THE GROUND WIRE FASTENED BY STAPLES ON A POLE SHALL BE SPACED TWO(2) FEET APART EXCEPT FOR A DISTANCE OF EIGHT(8) FEET ABOVE THE GROUND AND EIGHT(8) FEET FROM THE TOP OF THE POLE WHERE THEY SHALL BE SIX(6) INCHES APART.
5. THE POLE GROUND WIRE SHALL BE TIED TO THE POLE BUTT PLATE.
6. ALL METAL HARDWARE SHALL BE BONDED TO THE POLE GROUND WIRE.

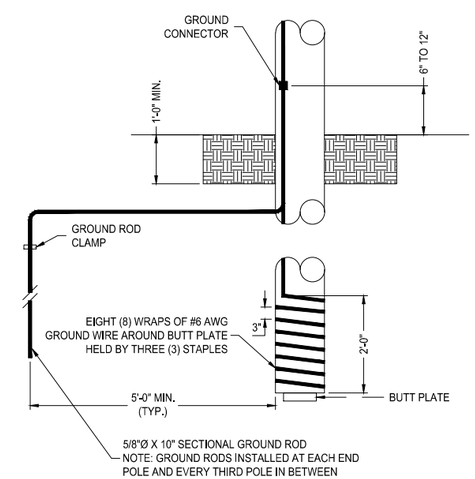

2 E3.0 **DISTRIBUTION LINE STRUCTURE GROUNDING**
SCALE: 3/4" = 1'-0"

PRELIMINARY/
PLANNING

All design information depicted on this drawing is proprietary and the sole property of Bruno Engineering, P.C. This design/drawing may be used only by authorization by Bruno Engineering. This design in part or in total may not be used or duplicated for any other project or purpose. Non payment for this design automatically revokes the authorization for use.

DO NOT SCALE THIS DRAWING: The scale factor shown on this drawing (if any) is based on a final drawing size of 24" x 36". Due to the differences in printers and final print size, the scale of the printed drawing may not be accurate. The dimensions shown on the drawing shall govern.

REVISIONS

NO.	DESCRIPTION	DATE	BY	CHK'D	APRV'D
A					
B					
C					
D					
E					
F					
G					
H					

CURRENT DRAWING

STATUS	ACTION	DATE
PRELIMINARY PLANNING	X	07/11/14
DESIGN DEVELOPMENT		
FOR APPROVAL		
APPROVED FOR BIDDING		
APPROVED FOR CONSTRUCTION		
AS BUILT		
PROJECT NO: 20784		

UtahAmerican Energy, Inc.

BRUNO ENGINEERING, P.C.
90 EAST 1300 SOUTH
PRICE, UTAH 84501
PHONE: (435) 613-0700
EMAIL: info@brunoengineering.com

UTAHAMERICAN ENERGY, INC.
LILA CANYON MINE
PORTAL & FAN POWERLINE
12.47kV TANGENT POLE DETAIL

ENGR'D BY: ADB | DRAWN BY: MVW | APRV'D BY: ADB | SHEET NO.: 08E3.0 | REV.: A
FILENAME: 20784 08E3.0 | SHEET 1 OF 1

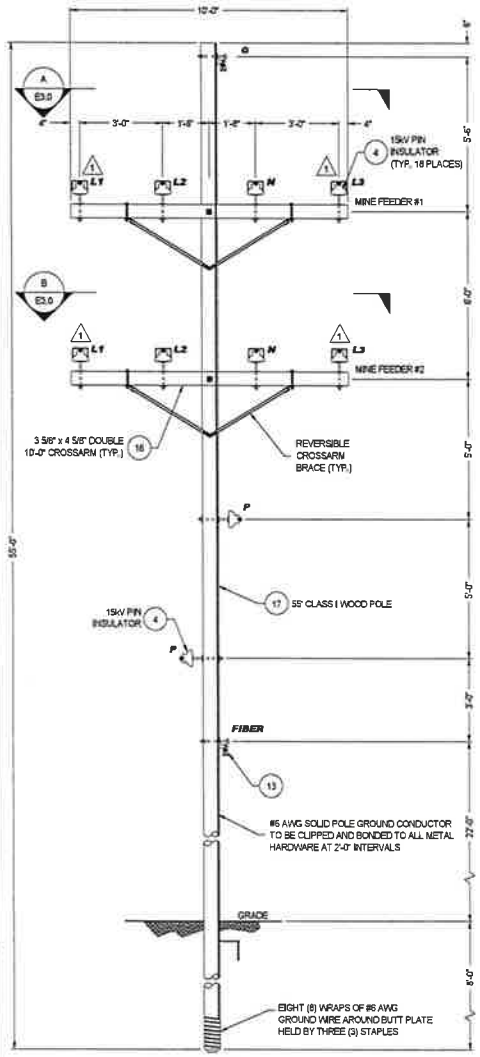

FRONT VIEW

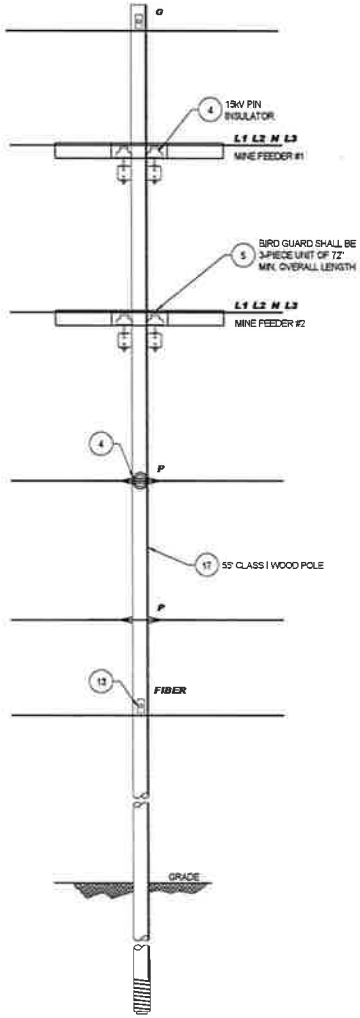

SIDE VIEW

1 / E3.0 — 12.47kV TANGENT POLE DETAIL
SCALE: 1/2" = 1'-0" (REF. E3.0)

POLE LINE CONDUCTOR AND CABLE SCHEDULE

CONDUCTOR AND CABLE REFERENCE LETTER	CONDUCTOR	POWER LINE CIRCUIT DESCRIPTION
L1	397.5 "LARK" ACSR	12.47kV PHASE CONDUCTOR
L2	397.5 "LARK" ACSR	12.47kV PHASE CONDUCTOR
L3	397.5 "LARK" ACSR	12.47kV PHASE CONDUCTOR
N	#4/0 AWG "PENGUIN"	NEUTRAL (MINE GROUND) CONDUCTOR
G	3/8" EHS	GROUND / STATIC CONDUCTOR
P	#2 "SPARATE" ACSR	PILOT CONDUCTOR
FIBER	24 STRAND, SINGLE-MODE FIBER OPTIC CABLE, ST CONNECTORS	FIBER OPTIC CABLE

REGISTERED PROFESSIONAL ENGINEER #152606 R. JAY MARSHALL 1/14/15 STATE OF UTAH

DISTRIBUTION LINE WOOD STRUCTURE GROUNDING

ALL WOOD DISTRIBUTION STRUCTURES ARE TO BE GROUNDED. ALL WOOD POLES ARE TO BE INSTALLED WITH A BUTT PLATE AND A BUTT WRAP EXTENDING TWO FEET FROM THE BUTT.

THE FOOTING RESISTANCE IS TO BE MEASURED AT EACH STRUCTURE SITE. ON MULTIPLE POLE STRUCTURES, THE POLE GROUND WIRES MUST BE CUT ON ALL THE POLES OF THE STRUCTURE AND ALL THE GROUND WIRES ON THE BUTT END OF THE POLES MUST BE BONDED TOGETHER PRIOR TO MEASURING THE STRUCTURE FOOTING RESISTANCE. THE POLE GROUND WIRE(S) MUST BE REPAIRED AFTER THE FOOTING RESISTANCE HAS BEEN MEASURED AND ANY ADDITIONAL GROUNDING ADDED.

STRUCTURE FOOTING RESISTANCE'S SHOULD BE 15 OHMS OR LESS.

THE FOLLOWING SEQUENCE SHOULD BE USED WHEN MEASURING STRUCTURE FOOTING RESISTANCE AND INSTALLING ADDITIONAL STRUCTURE GROUNDING.

1. MEASURE THE STRUCTURE FOOTING RESISTANCE. (FOLLOW INSTRUMENT MANUFACTURER'S INSTRUCTIONS)
   A. IF THE STRUCTURE FOOTING RESISTANCE IS 15 OHMS OR LESS, RECORD THE STRUCTURE NUMBER AND STRUCTURE FOOTING RESISTANCE AND PROCEED TO THE NEXT STRUCTURE.
   B. IF THE STRUCTURE FOOTING RESISTANCE IS GREATER THAN 15 OHMS, GO TO STEP 2.
2. INSTALL A 5/8" X 10 FOOT SECTIONAL GROUND ROD AS SHOWN. ATTACH THE GROUND LEAD(S) FROM THE POLE GROUND WIRE TO THE GROUND ROD. [SPLIT BOLT CONNECTOR SHOULD BE USED FOR THE TEMPORARY GROUND ROD LEAD-POLE GROUND WIRE CONNECTION.]
3. MEASURE THE STRUCTURE FOOTING RESISTANCE.
   A. IF THE STRUCTURE FOOTING RESISTANCE IS 15 OHMS OR LESS, RECORD THE STRUCTURE NUMBER, STRUCTURE FOOTING RESISTANCE AND NUMBER OF GROUND RODS DRIVEN.
   B. (1) IF THE STRUCTURE FOOTING RESISTANCE IS LESS THAN ONE HALF OF THE PREVIOUS MEASUREMENT, BUT STILL EXCEEDS 15 OHMS GO TO STEP 2 AND INSTALL DEEP DRIVEN GROUND ROD. IF DEEP DRIVEN GROUND ROD CANNOT BE INSTALLED, INSTALL ANOTHER GROUND ROD IN A NEW LOCATION MAINTAINING 5 FEET MINIMUM DISTANCE FROM ONE POLE OR OTHER GROUND RODS. (MAXIMUM OF 3 GROUND RODS PER STRUCTURE).
   (2) IF THE STRUCTURE FOOTING RESISTANCE IS NOT REDUCED TO ONE HALF OR LESS OF THE PREVIOUS MEASUREMENT, RECORD THE STRUCTURE NUMBER, STRUCTURE FOOTING RESISTANCE AND NUMBER OF GROUND RODS DRIVEN.
4. THE GROUND WIRE FASTENED BY STAPLES ON A POLE SHALL BE SPACED TWO(2) FEET APART EXCEPT FOR A DISTANCE OF EIGHT(8) FEET ABOVE THE GROUND AND EIGHT(8) FEET FROM THE TOP OF THE POLE WHERE THEY SHALL BE SIX(6) INCHES APART.
5. THE POLE GROUND WIRE SHALL BE TIED TO THE POLE BUTT PLATE.
6. THE LINE END [illegible] SHALL BE BONDED TO THE POLE GROUND WIRE.

RECEIVED
JAN 15 2015
DIV. OF OIL, GAS & MINING

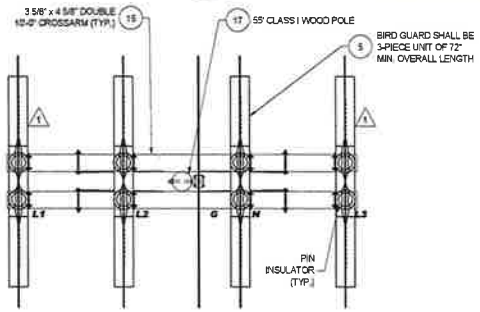

A & B / E3.0 — UPPER & LOWER CROSSARMS
MINE FEEDER #1 (SECTIONS A & B)
SCALE: 3/8" = 1'-0"

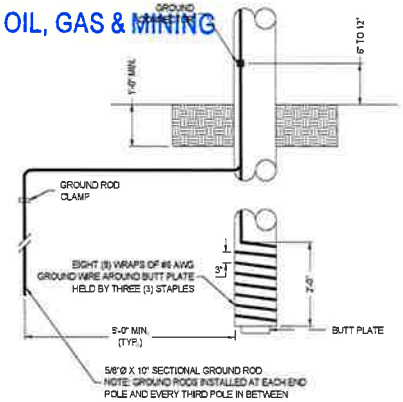

2 / E3.0 — DISTRIBUTION LINE STRUCTURE GROUNDING
SCALE: 3/4" = 1'-0"

APPROVED FOR CONSTRUCTION

All design information depicted on this drawing is proprietary and the sole property of Bruno Engineering, P.C. This design/drawing may be used only by authorization by Bruno Engineering. This design in part or in total may not be used or duplicated for any other project or purpose. Non payment for this design automatically revokes the authorization for use.

DO NOT SCALE THIS DRAWING: The scale factor shown on this drawing (if any) is based on a final drawing size of 24" x 36". Due to the differences in printers and final print size, the scale of the printed drawing may not be accurate. The dimensions shown on the drawing shall govern.

REVISIONS

NO.	DESCRIPTION	DATE	BY	CHKD	APPD	CURRENT DRAWING	REPLACE	DATE
1	ADDITIONAL RAPTOR PROTECTION	01-02-15	JCN	ADB	ADB			
						X		06/06/2014

UtahAmerican Energy, Inc.

BRUNO ENGINEERING, P.C. — Appendix 3-8

90 EAST 1300 SOUTH
PRICE, UTAH 84501
PHONE: (435) 613-0700
EMAIL: info@brunoengineering.com

UTAHAMERICAN ENERGY, INC.
LILA CANYON MINE
PORTAL & FAN POWERLINE
12.47kV TANGENT POLES DETAIL (POLES P2, P4, & P5)

DRAWN: ADB | CHKD: MVW | APPD: ADB | SHEET 1 OF 1 | 08E3.0 | REV. 1
20784_08E3.0

Appendix 7-4
Lila Canyon Mine
Sedimentation and Drainage Control Plan

UTAH REGISTERED PROFESSIONAL ENGINEER
#154168
DAN W. GUY

REGISTERED PROFESSIONAL ENGINEER
#152606
R. JAY MARSHALL
12/30/14
STATE OF UTAH

Revised
January 2001
October 2002 RJM
February 2007 TJS
April 2008 TJS
July 2008 TJS
June 2009 TJS
January 2010 TJS
January 2012 TJS
October 2014 TJS

SEDIMENTATION AND DRAINAGE CONTROL PLAN

TABLE OF CONTENTS

Section **Page Number**

1- Introduction:.. . . . . Page -1-

2- Design of Drainage Control Structures:.. . . . . Page -3-

3- Design of Sediment Control Structures:. . . . . Page -41-

4- Design of Drainage Control Structures for Reclamation:. . . . . Page -54-

5- Alternate Sediment Control for Fan, Water Treatment, and Topsoil Sites. . . . . Page -59-

SEDIMENTATION AND DRAINAGE CONTROL PLAN

1- Introduction

The Sedimentation and Drainage Control Plan for the Lila Canyon Mine has been designed according to the State of Utah R645- Coal Mining Rules, November 1, 1996. All design criteria and construction will be certified by a Utah Registered Professional Engineer.

This plan has been divided into the following three sections:

1) Design of Drainage Control Structures for the Proposed Construction

2) Design of Sediment Control Structures

3) Design of Drainage Control Structures for Reclamation

The general surface water control plan for this project will consist of the following:

(a) This is a new site construction. All areas proposed for disturbance will be sloped to drain to surface ditches and/or culverts where runoff will be carried to two sediment ponds. All minesite drainage controls and watersheds are shown on Plate 7-5 “Proposed Sediment Control Map”.

(b) The majority of undisturbed runoff will be diverted around the minesite and/or beneath the sediment pond #1 by properly sized culverts. Undisturbed diversion culvert UC-1, is located on the northwest end of the site. This diversion will allow the majority of undisturbed runoff from the Right Fork of Lila Canyon to bypass the mine area beneath sediment pond #1. All undisturbed diversions are designed to carry runoff from a 100 year - 6 hour precipitation event. UC-1 is oversized at 60" diameter.

(c) Two adequately sized sediment ponds will be constructed at the lower end of the site. These ponds are sized to contain and treat the runoff from all of the disturbed area and any contributing undisturbed areas for a 10 year - 24 hour precipitation event. The ponds will be equipped with C.M.P. culvert principle spillway and decant and CMP culvert emergency spillway sized to safely pass runoff from a 25 year - 6 hour precipitation event. The spillways from sediment pond #1 will discharge into the UC-1 CMP culvert running beneath the pond. This culvert will discharge onto an engineered discharge structure and into the Right Fork of Lila Canyon channel below the minesite. The spillways from sediment pond #2 will discharge onto an engineered discharge structure and into the Middle Fork of Lila Canyon channel below the minesite.

DESIGN OF DRAINAGE CONTROL STRUCTURES

Design Parameters:

2.1 Precipitation
2.2 Flow
2.3 Velocity
2.4 Drainage Areas
2.5 Slope Lengths
2.6 Runoff
2.7 Runoff Curve Numbers
2.8 Culvert Sizing
2.9 Culverts
2.10 Main Canyon Culvert - Outlet Structure
2.11 Ditches

Tables:

Table 1 Undisturbed Watershed Summary
Table 2 Disturbed Watershed Summary
Table 3 Watershed Parameters
Table 4 Runoff Summary - Undisturbed Watershed (Not Draining to Pond)
Table 5 Runoff Summary - Watersheds Draining to Sediment Pond
Table 6 Runoff Control Structure - Watershed Summary
Table 7 Runoff Control Structure - Flow Summary
Table 8 Disturbed Ditch Design Summary
Table 9 Disturbed Culvert Design Summary
Table 10 Undisturbed Culvert Design Summary

Figures:

Figure 1 Culvert Nomograph
Figure 2 Rip-Rap Chart
Figure 3 Disturbed Ditch Typical Section
Figure 4 Trash Rack - Culvert Inlet - Typical Section
Figure 4A UC-1 Culvert Outlet
Figure 7.26 Design of Outlet Protection - Barfield et al.

Design Parameters

2.1 Precipitation

The precipitation-frequency values for the area were taken from the approved Mining and Reclamation Plan, Horse Canyon Mine, Emery County, Utah, Volume III, submitted by I.P.A.

Frequency - Duration	Precipitation
10 year - 6 hour	1.30"
10 year - 24 hour	1.90"
25 year - 6 hour	1.50"
100 year - 6 hour	1.90"

2.2 Flow

Peak flows, flow depths, areas and velocities were calculated using the computer program "Office of Surface Mining Watershed Model", Storm, Version 6.21 by Gary E. McIntosh. All flows are based on the SCS - TR55 Method for both SCS 6-hour and NOAA Type II, 24-hour storms.

Time of concentration of storm events were calculated for each drainage area using the SCS upland curve method included as part of the Storm software. For the undisturbed areas UA-1 and UA-4 the watershed type was set at forested and the curve condition was set at bare ground. For UA-5, UA-6a and UA-6b and all DA watersheds, the watershed type was set as disturbed and the curve condition was set at bare ground.

2.3 Velocity

Flow velocities for each ditch structure were also calculated using the Storm computer program with Manning's Formula:

$$V = \frac{1.49}{n} R^{2/3} S^{1/3}$$

where:

V	=	Velocity (fps)
R	=	Hydraulic Radius (ft.)
S	=	Slope (ft. per ft.)
n	=	Manning's n; Table 3.1, p. 159,

"Applied Hydrology and Sedimentology for Disturbed Areas", Barfield, Warner & Haan, 1983.

Note: The following Manning's n were used in the calculations:

Structure	Manning's n
Culverts (cmp)	0.025
Unlined Disturbed Area Ditches	0.035

2.4 Drainage Areas

All drainage areas were determined directly from Plate 7-1, "Permit Area Hydrology Map", Plate 7-2, "Disturbed Area Hydrology/Watershed", or Plate 7-5 "Proposed Sediment Control".

2.5 Slopes, Lengths

All slopes and lengths were measured directly from the topography on Plates 7-1, 7-2, and/or 7-5.

2.6 Runoff Volume

Runoff was calculated using the SCS Formula for NOAA Type II, 24-hour storms; using the Storm Version 6.21 computer program:

$$Q = \frac{(P - 0.2\,S)^2}{P + 0.8\,S}$$

where:

CN	=	Runoff Curve Number
Q	=	Runoff in inches
P	=	Precipitation in inches
S	=	$\frac{1000}{CN} - 10$

2.7 Runoff Curve Numbers

Two curve numbers were utilized for the undisturbed areas. Areas with milder slopes (less than 30%) were given a runoff curve number of 75. All other undisturbed areas (30% slope or greater) were given a runoff curve number of 83. These numbers were taken directly from the approved "Mining and Reclamation Plan, Horse Canyon Mine, Emery County, Utah, Volume III", submitted by I.P.A. The numbers in that plan were based on vegetation and soils data from on-site.

Two other runoff curve numbers have been used in the calculations. A runoff CN of 90 is used for all disturbed areas (including the areas designated as undisturbed which lie within the disturbed area boundary (see Plate 7-2), and a runoff CN of 93 is used for paved areas. These numbers are based on commonly used and approved values and from Table 2.20, (p. 82, Barfield, et al, 1983).

The following is a summary of runoff curve numbers used in these calculations:

Watershed	Runoff CN
Undisturbed (<30% slopes):	75
Undisturbed (>30% slopes):	83
Disturbed:	90
Paved:	93

2.8 Culvert Sizing

Minimum culvert sizing is based on the either the inlet control nomograph or Manning's Equation. Culverts were evaluated for inlet control conditions to determine the minimum pipe size using the Culvert Nomograph included as Figure 1 of this Appendix. If the pipe had a HW/D ratio equal to or greater than 1.0 or the slope were less than 2% the Hydraulic Toolbox, Version 4.0 or later version computer program was used to determine the pipe flow diameter using:

$$D = \left(\frac{2.16\ Q\ n}{\sqrt{s}}\right)^{0.35}$$

where:	D	=	Required Diameter (feet)
	Q	=	QP = Peak Discharge (cfs)
	n	=	Roughness Factor (0.025 for CMP)
	S	=	Slope (ft. per ft.)

2.9 Culverts

Culverts have been sized according to the calculations previously described, and are shown on Plate 7-5, "Proposed Sediment Control". Culverts carrying undisturbed drainages are designated with UC- Letters (i.e. UC-1). All undisturbed area drainage culverts will be fitted with trash racks to minimize plugging by rocks or other debris.

Trash racks will be provided at the inlet for all undisturbed drainage culverts. These will consist of 3/4" steel bars welded on 6" centers across the flared inlet structures of each culvert. Bars will be sloped from the front of the inlet structure up to the top of the culvert. This ramp configuration will allow trash, branches and other potential obstructions to be swept up and away from the inlet rather than being impinged against the grates during a flow event. Rip rap will be placed around the flared inlet structure and above it to a height of at least 6" above the required headwall for each culvert. (See Figure 4 for details). Trash racks will be checked on a routine schedule and following precipitation events and all trash, branches and other obstructions will be removed.

It should be noted that all undisturbed area culverts are adequately sized to handle the expected runoff from a 100 year - 6 hour event for maximum protection of the mine area, sediment pond and undisturbed drainage. This is well in excess of the 10 year - 6 hour event required by the regulations and is proposed as an extra measure of safety.

Disturbed area culverts and ditches are shown on the "Proposed Sediment Control", Plate 7-5. Culverts carrying disturbed drainage are designated with a DC-number (i.e. DC-1). Calculations for all disturbed area culverts and ditches are also included with this report, along with design criteria. Disturbed drainage areas draining to culverts and ditches are marked with a DA-number (i.e. DA-1). Undisturbed drainage areas are marked with a UA-number (i.e. UA-1).

Culverts will be inspected regularly, and cleaned as necessary to provide for passage of drainage flows. Inlets and outlets shall also be maintained so as to prevent plugging or undue restriction of water flow.

All disturbed area culverts are temporary, and will be removed upon final reclamation.

2.10 Main Canyon Culvert - Outlet Structure

The outlet of culvert UC-1 has been designed to flow onto a rip-rap apron to protect against souring and to allow for energy dissipation. The rip-rap apron is designed to fit the natural channel configuration as closely as possible, and will allow runoff to re-enter the natural channel at a reduced velocity which is no greater than natural flow conditions. Runoff from the 100 year - 6 hour precipitation event in the canyon below the minesite has been calculated at 52.32 cfs, including sediment pond overflow.

The rip-rap apron design is based on Figure 7-26, Design of Outlet Protection - Maximum Tailwater Condition, "Applied Hydrology and Sedimentology for Disturbed Areas", Barfield, Warner and Haan, 1983. Based on the figure, the apron should be a minimum of 15' in length, widening from 5' to 9', with a 0.1% slope. The proposed length has been increased to 20', to ensure adequate time for velocity reduction. The apron slope is kept at 0.1%. Rip-rap size is conservatively placed at 12" D_{50}. Rip-rap will be placed to a depth of 1.5 D_{50} and will be placed on a 6" layer of 2" drain rock filter. Rip-rap will also be placed on the 2H:1V side slopes to the height of the culvert (5') at the culvert outlet tapering to 3' at the outlet of the apron. This rip-rap apron has been sized and designed to adequately dissipate energy from flow velocities of a 100 year - 6 hour precipitation event and resist dislodgement. The drain rock filter bed will also serve to secure the rip-rap boulders firmly in place, to add an additional element of stability, and prevent scouring underneath the armored apron. (See Figure 4A for construction details). The natural channel below the culvert has a gradient of approximately 7.76%. When the flow is routed from the culvert across the apron to the natural channel, the velocity is reduced from 4.79 fps at the culvert outlet to 1.50 fps at the outlet of the apron. (See Culvert Outlet Rip-Rap Apron Flow Velocity Calculations in Appendix 1.)

It should be noted that these calculations are based on a 100 year - 6 hour event.

2.11 Ditches

All ditches will carry disturbed area drainage to the pond. Ditches are shown on the "Proposed Sediment Control", Plate 7-5, and are designated with a DD-number (i.e. DD-1 for Disturbed Area Ditches) or UD-number (i.e. UD-1 for Undisturbed Area Ditches).

All ditches are designed to carry the expected runoff from a 10 year - 6 hour event with a minimum freeboard of 0.5' (See Table 8 and Figure 3).

Ditches which exhibit expected flow velocities of 5 fps or greater will be lined with rip-rap. A typical cross-section is shown on Figure 3 and flow depths and areas for all lined and unlined ditches are presented in Table 8 of this report.

Ditch slopes have been determined from Plates 7-2 and 7-5.

All ditches will be inspected regularly, and maintained to the minimum dimensions to provide adequate capacity for the design flow. All ditches are temporary and will be removed as described under the reclamation hydrology section. (Section 4)

TABLE 1

Undisturbed Watershed Summary		
Watershed	Drains To	Final
UA-1	UC-1	Right Fork Lila Canyon
UA-2a	DD-7	Sediment Pond
UA-2b	DD-1	Sediment Pond
UA-4	Sediment Pond	Sediment Pond
UA-5a	DD-20	Sediment Pond
UA-5b	UA-1	By-Pass Culvert
UA-6a	DD-7	Sediment Pond
UA-6b	DD-1	Sediment Pond
UA-6c	DD-7	Sediment Pond
UA-8	ASCA Area	Left Fork Lila Canyon

TABLE 2

Disturbed Watershed Summary		
Watershed	Drains To	Final
DA-1a	DD-1a	Sediment Pond
DA-1b	DD-1b	Sediment Pond
DA-1c	DD-5a	Sediment Pond
DA-3	DD-3	Sediment Pond
DA-5a	DD-5a & DC-20	Sediment Pond
DA-5b	DC-22	Sediment Pond
DA-5c	DC-23	Sediment Pond
DA-5d	DC-24	Sediment Pond
DA-5e	DC-25	Sediment Pond
DA-6a	DC-21	Sediment Pond
DA-6b	DD-6b	Sediment Pond
DA-6c	DD-6c	Sediment Pond
DA-7	DD-7 & DC-7	Sediment Pond
DA-8a	DD-8a	Sediment Pond
DA-8b	DD-8b	Sediment Pond
DA-9	DD-9	Sediment Pond
DA-10	DD-10	Sediment Pond
DA-11	DD-11	Sediment Pond
DA-13a	DD-13a	Sediment Pond
DA-13b	DD-13b	Sediment Pond
DA-13c	DD-13d	Sediment Pond
DA-13d	DD-13e	Sediment Pond
UA-5 (future)	DD-20	Sediment Pond
DA-14a	DD-14a	Sediment Pond
DA-14b	DD-14b	Sediment Pond
DA-15	DD-15	Sediment Pond
DA-16a	DD-16a	Sediment Pond
DA-16b	DD-16b	Sediment Pond
DA-17a	DD-17a	Sediment Pond
DA-17b	DD-17b	Sediment Pond
DA-18a	DD-18a	Sediment Pond
DA-18b	DD-18b	Sediment Pond
Fan Portal	ASCA Area	Right Fork Lila Canyon
TS-1	Topsoil Berm	Sediment Pond
POND	Sediment Pond	Sediment Pond

TABLE 3

Watershed Parameters					
Watershed	Area (Acre)	Hydraulic Length (ft.)	Elevation Change (ft.)	% Slope	CN
Undisturbed Watersheds					
UA-1	248.82	9475	2020	21.32	75
UA-2a	7.66	1360	1000	74.26	83
UA-2b	4.06	660	410	62.12	83
UA-4	14.08	1950	595	30.51	83
UA-5a	1.05	330	35	9.86	90
UA-5b	1.44	600	45	7.50	90
UA-6a	1.13	230	80	34.78	90
UA-6b	0.40	90	30	33.33	90
UA-6c	0.44	340	170	50.00	90
UA-8	0.54	100	30	30.00	90
Disturbed Watersheds					
DA-1a	1.13	660	85	12.88	90
DA-1b	0.38	365	57	15.62	90
DA-3	0.25	170	16	9.41	90
DA-5a	0.70	480	53	11.04	93
DA-5b	1.15	430	26	6.05	93
DA-5c	0.29	166	36	21.69	93
DA-5d	0.42	390	46	11.79	93
DA-5e	0.18	285	30	10.53	93
DA-6a	0.74	245	50	20.41	83
DA-6b	2.34	760	70	9.21	90
DA-6c	2.51	690	70	10.14	90
DA-7	2.68	630	35	5.56	95
DA-8a	0.26	284	54	19.01	90
DA-8b	0.63	670	52	7.76	90
DA-9	0.05	100	11	11.00	93
DA-10	2.10	715	40	5.59	93
DA-11	0.82	480	22	4.58	93
DA-13a	1.94	770	24	3.12	93

TABLE 3 (Continued)

Watershed Parameters					
Watershed	Area (Acre)	Hydraulic Length (ft.)	Elevation Change (ft.)	% Slope	CN
Disturbed Watersheds					
DA-13b	1.36	450	75	16.67	83
DA-13c	0.49	375	40	10.67	90
DA-13d	0.40	460	22	4.78	90
DA-14a	0.36	390	34	8.72	95
DA-14b	0.75	540	16	2.96	95
DA-15	1.02	810	58	7.16	95
DA-16a	0.16	370	10	2.70	95
DA-16b	0.09	210	13	6.19	95
DA-17a	0.42	610	19	3.11	95
DA-17b	0.07	100	5	5.00	95
DA-18a	0.07	175	6	3.43	95
DA-18b	0.44	650	24	3.69	95
Fan Portal	0.60	195	25	12.82	90
TS-1	2.95	660	38	5.76	83
POND 1	1.92	380	50	13.16	100
POND 2	0.24	50	8	16.00	100

TABLE 4

Runoff Summary Undisturbed Watersheds (Not Draining to Ponds)					
Watershed	10 yr. / 6 hr. Peak Flow - cfs	25 yr. / 6 hr. Peak Flow - cfs	100 yr. / 6 hr. Peak Flow - cfs	10 yr. / 24 hr. Peak Flow - cfs	10 yr. / 24 hr. Volume - ac.ft.
UA-1	7.03	10.33	20.47	25.45	6.91
UA-8	0.14	0.18	0.26	0.14	0.03

TABLE 5

Runoff Summary Watershed Drainage to Sediment Pond				
Watershed	10 yr. / 6 hr. Peak Flow-cfs	25 yr. / 6 hr. Peak Flow-cfs	10 yr. / 24 hr. Peak Flow-cfs	10 yr. / 24 hr. Volume-ac-ft
Undisturbed Watersheds draining to Pond #1				
UA-2a	0.98	1.51	3.29	0.40
UA-2b	0.54	0.83	1.80	0.21
UA-4	3.14	4.65	9.20	0.74
UA-5a	0.43	0.56	0.88	0.09
UA-5b	0.68	0.87	1.38	0.12
UA-6a	0.47	0.60	0.95	0.12
UA-6b	0.10	0.13	0.21	0.03
UA-6c	0.23	0.30	0.47	0.04
Disturbed Watersheds				
DA-1a	0.52	0.66	1.05	0.10
DA-1b	0.15	0.19	0.31	0.03
DA-3	0.11	0.14	0.21	0.03
DA-5a	0.39	0.49	0.72	0.07
DA-5b	0.68	0.84	1.23	0.12
DA-5c	0.12	0.15	0.21	0.03
DA-5d	0.22	0.28	0.41	0.04
DA-5e	0.09	0.11	0.17	0.02
DA-6a	0.12	0.18	0.35	0.04
DA-6b	1.60	2.06	3.27	0.28
DA-6c	1.18	1.52	2.40	0.21
DA-7	1.98	2.39	3.36	0.31
DA-8a	0.10	0.12	0.19	0.02
DA-8b	0.36	0.47	0.74	0.06
DA-9	0.04	0.05	0.07	0.01
DA-10	1.36	1.68	2.49	0.21
DA-11	0.50	0.62	0.92	0.08
DA-13a	1.26	1.56	2.30	0.20
DA-13b	0.26	0.38	0.75	0.07
DA-13c	0.20	0.26	0.41	0.04
DA-13d	0.19	0.24	0.38	0.03
TS-1	0.65	0.96	1.90	0.15
POND 1	1.18	1.42	1.99	0.22
POND 2	0.23	0.27	0.35	0.04

TABLE 5 (Continued)

Runoff Summary Watershed Drainage to Sediment Pond				
Watershed	10 yr. / 6 hr. Peak Flow-cfs	25 yr. / 6 hr. Peak Flow-cfs	10 yr. / 24 hr. Peak Flow-cfs	10 yr. / 24 hr. Volume-ac-ft
Disturbed Watersheds				
Fan Portal	0.21	0.27	0.40	0.43
DA-14a	0.23	0.28	0.39	0.04
DA-14b	0.56	0.67	0.95	0.09
DA-15	0.76	0.91	1.28	0.12
DA-16a	0.11	0.14	0.19	0.02
DA-16b	0.06	0.07	0.10	0.01
DA-17a	0.31	0.38	0.53	0.05
DA-17b	0.05	0.06	0.09	0.01
DA-18a	0.06	0.07	0.10	0.01
DA-18b	0.33	0.40	0.56	0.05

TABLE 6

Runoff Control Structure Watershed Summary		
Structure	Type	Contributing Watersheds/Structures
UC-1	Culvert	UA-1, Fan Portal, Sediment Pond Overflow
DD-1a	Ditch	DA-1a
DC-1	Culvert	DD-1a & UA-2b
DD-1b	Ditch	DC-1, DA-1b, UA-6b
DC-2	Culvert	DD-1b
DD-3	Ditch	DA-3
DC-4	Culvert	Replaced DD-3
DD-5a	Ditch	DA-5a, DC-2, DC-4
DC-20	Culvert	DD-5a
DD-6a	Ditch	DA-6a
DC-21	Culvert	DD-6a
DC-22	Culvert	DC-20, DC-21, DA-5b
DC-23	Culvert	DC-22, DA-5c
DC-24	Culvert	DC-23, DA-5d
DC-4	Culvert	DD-5b
DD-5b	Ditch	DC-4
DC-5	Culvert	DD-5b
DD-5c	Ditch	DC-5
DC-6	Culvert	DD-5c
DC-25	Culvert	DC-6, DC-24
DD-6b	Ditch	DA-6b
DD-6c	Ditch	DA-6c
DC-8	Culvert	DD-6b, DD-6c
DD-7	Ditch	DA-7, UA-6a, UA-6c
DC-7	Culvert	DD-7

TABLE 6

Runoff Control Structure Watershed Summary		
Structure	Type	Contributing Watersheds/Structures
DD-8a	Ditch	DA-8a
DD-8b	Ditch	DD-8a, DC-7, DA-8b
DD-9	Ditch	DA-9
DC-9	Culvert	DD-9
DD-10	Ditch	DA-10
DC-12	Culvert	DD-10
DD-11	Ditch	DA-11
DD-13a	Ditch	DA-13a
DD-13b	Ditch	DD-13a, DD-11
DD-13c	Ditch	DD-13b, DC-12
DD-13d	Ditch	DD-13c, DA-13b, DA-13c
DC-13	Culvert	DD-13d
DD-13e	Ditch	DC-13, DA-13d
DD-14a	Ditch	DA-14a
DD-14b	Ditch	DA-14b
DC-14	Culvert	DD-14a, DD-14b
DD-15	Ditch	DA-15
DC-19	Culvert	DD-15
DD-16a	Ditch	DA-16a
DC-15	Culvert	DD-16a
DD-16b	Ditch	DC-15, DA-16b
DD-17a	Ditch	DA-17a
DC-16	Culvert	DD-17a
DD-17b	Ditch	DC-16, DC-14, DA-17b
DC-17	Culvert	DD-17b, DD-16b

TABLE 6

Runoff Control Structure Watershed Summary		
Structure	Type	Contributing Watersheds/Structures
DD-18a	Ditch	DA-18a
DC-18	Culvert	DD-18a
DD-18b	Ditch	DC-18, DA-18b
DD-20	Ditch	DC-8, UA-5a

Ditches DD-2, DD-4, DD-12 & DD-19 do not exist. Removed with changes in the overall plan

TABLE 7

Runoff Control Structure Flow Summary					
Structure	Type	10yr. / 6hr. Peak Flow-cfs	25yr. /6hr. Peak Flow-cfs	10yr. / 24hr. Peak Flow-cfs	100yr. / 6hr. Peak Flow-cfs
UC-1*	Culvert	35.46	38.82	54.07	49.09
DD-1a	Ditch	0.52	0.66	1.05	- -
DC-1	Culvert	1.06	1.49	2.85	- -
DD-1b	Ditch	1.31	1.81	3.37	- -
DC-2	Culvert	1.31	1.81	3.37	- -
DD-3	Ditch	0.11	0.14	0.21	- -
DC-4	Culvert	0.11	0.14	0.21	- -
DD-5a	Ditch	1.81	2.44	4.30	- -
DC-20	Culvert	1.81	2.44	4.30	- -
DD-6a	Ditch	0.12	0.18	0.35	- -
DC-21	Culvert	0.12	0.18	0.35	- -
DC-22	Culvert	2.61	3.46	5.88	- -
DC-23	Culvert	2.73	3.61	6.09	- -
DC-24	Culvert	2.95	3.89	6.50	- -
DC-4	Culvert	0.09	0.11	0.17	- -
DD-5b	Ditch	0.09	0.11	0.17	- -
DC-5	Culvert	0.09	0.11	0.17	- -
DD-5c	Ditch	0.09	0.11	0.17	- -
DC-6	Culvert	0.09	0.11	0.17	- -
DC-25	Culvert	3.04	4.00	6.67	- -
DD-6b	Ditch	1.60	2.06	3.27	- -
DD-6c	Ditch	1.18	1.52	2.40	- -
DC-8	Culvert	2.78	3.58	5.67	- -
DD-7	Ditch	2.55	3.12	4.52	- -
DC-7	Culvert	2.55	3.12	4.52	- -

TABLE 7

Runoff Control Structure Flow Summary					
Structure	Type	10yr. / 6hr. Peak Flow-cfs	25yr. /6hr. Peak Flow-cfs	10yr. / 24hr. Peak Flow-cfs	100yr. / 6hr. Peak Flow-cfs
DD-8a	Ditch	0.10	0.12	0.19	- -
DD-8b	Ditch	3.01	3.71	5.45	- -
DD-9	Ditch	0.04	0.05	0.07	- -
DC-9	Culvert	0.04	0.05	0.07	- -
DD-10	Ditch	1.36	1.68	2.49	- -
DC-12	Culvert	1.36	1.68	2.49	- -
DD-11	Ditch	0.50	0.62	0.92	- -
DD-13a	Ditch	1.26	1.56	2.30	- -
DD-13b	Ditch	1.76	2.18	3.22	- -
DD-13c	Ditch	3.12	3.86	5.71	- -
DD-13d	Ditch	3.58	4.50	6.87	- -
DC-13	Culvert	3.58	4.50	6.87	- -
DD-13e	Ditch	3.77	4.74	7.25	- -
DD-14a	Ditch	0.23	0.28	0.39	- -
DD-14b	Ditch	0.56	0.67	0.95	- -
DC-14	Culvert	0.79	0.95	1.34	- -
DD-15	Ditch	0.76	0.91	1.28	- -
DC-19	Culvert	0.76	0.91	1.28	- -
DD-16a	Ditch	0.11	0.14	0.19	- -
DC-15	Culvert	0.11	0.14	0.19	- -
DD-16b	Ditch	0.17	0.21	0.29	- -
DD-17a	Ditch	0.31	0.38	0.53	- -
DC-16	Culvert	0.31	0.38	0.53	- -
DD-17b	Ditch	0.53	0.63	0.90	- -
DC-17	Culvert	3.74	4.84	7.86	- -

TABLE 7

Runoff Control Structure Flow Summary					
Structure	Type	10yr. / 6hr. Peak Flow-cfs	25yr. /6hr. Peak Flow-cfs	10yr. / 24hr. Peak Flow-cfs	100yr. / 6hr. Peak Flow-cfs
DD-18a	Ditch	0.06	0.07	0.10	- -
DC-18	Culvert	0.06	0.07	0.10	- -
DD-18b	Ditch	0.39	0.47	0.66	- -
DD-20	Ditch	3.21	4.14	6.55	- -
DC-26	Culvert	4.89	6.22	9.80	- -

Ditches DD-2, DD-4, DD-12 & DD-19 do not exist. Removed with changes in the overall plan
* UC-1flow values includes sum of peak flows for UA-1 from Table 4 and 25yr-6hr Sediment Pond 1 peak flow of 28.22 cfs & Fan Portal flow from Table 5.

TABLE 8						
Disturbed Ditch Design Summary						
Ditch	DD-1a	DD-1b	DD-1c*	DD-2a*	DD-2b*	DD-2c*
Slope (%)	11.42	11.20				
Length (ft.)	378	327				
Manning's No.	0.035	0.040				
Side Slope (H:V)	2:1	2:1				
*Bottom Width (ft.)	0.00	1.50				
Peak Flow 10/6 (cfs)	0.52	1.31				
Peak Flow 10/24 (cfs)	1.05	3.37				
Flow Depth (ft.) 10/6	0.27	0.19				
Flow Depth (ft.) 10/24	0.35	0.33				
Flow Area ($ft.^2$) 10/6	0.15	0.37				
Flow Area ($ft.^2$) 10/24	0.25	0.71				
Velocity (fps) 10/6	3.52	3.57				
Velocity (fps) 10/24	4.20	4.78				
Rip-Rap Req'd (Y/N)	N	Y				
Rip-Rap D_{50}	-	3"	-			
Note: Slope/Lengths from Plate 7-2.						

* DD-1c, DD-2a, DD-2b, DD-2c removed due to grading changes

TABLE 8 (Continued)

Disturbed Ditch Design Summary							
Ditch	DD-3	DD-4a*	DD-4b*	DD-4c*	DD-5a	DD-5b	DD-5c
Slope (%)	0.60						
Length (ft.)	176						
Manning's No.	0.035						
Side Slope (H:V)	2:1						
*Bottom Width (ft.)	0.00						
Peak Flow 10/6 (cfs)	0.11						
Peak Flow 10/24 (cfs)	0.21						
Flow Depth (ft.) 10/6	0.20						
Flow Depth (ft.) 10/24	0.26						
Flow Area ($ft.^2$) 10/6	0.08						
Flow Area ($ft.^2$) 10/24	0.13						
Velocity (fps) 10/6	1.35						
Velocity (fps) 10/24	1.59						
Rip-Rap Req'd (Y/N)	N						
Rip-Rap D_{50}	-						
Note: Slope/Lengths from Plate 7-2.							

* DD-4a, DD-4b, DD-4c, DD-5a, DD-5b, & DD-5c Removed

TABLE 8 (Continued)

Disturbed Ditch Design Summary							
Ditch	DD-6a	DD-6b	DD-6c	DD-7	DD-8a	DD-8b	DD-8c*
Slope (%)	6.40	0.50	3.38	1.08	20.42	7.81	
Length (ft.)	220	278	363	370	284	666	
Manning's No.	0.035	0.035	0.035	0.035	0.035	0.040	
Side Slope (H:V)	2:1	2:1	2:1	2:1	2:1	2:1	
*Bottom Width (ft.)	0.00	0.00	1.00	1.00	0.00	1.00	
Peak Flow 10/6 (cfs)	0.12	1.60	1.18	2.55	0.10	3.01	
Peak Flow 10/24 (cfs)	0.35	3.27	2.40	4.52	0.19	5.45	
Flow Depth (ft.) 10/6	0.18	0.75	0.46	0.77	0.13	0.59	
Flow Depth (ft.) 10/24	0.26	0.97	0.61	0.95	0.17	0.74	
Flow Area ($ft.^2$) 10/6	0.06	1.11	0.43	1.18	0.03	0.70	
Flow Area ($ft.^2$) 10/24	0.14	1.90	0.73	1.81	0.06	1.10	
Velocity (fps) 10/6	1.96	1.44	2.74	2.16	2.90	4.28	
Velocity (fps) 10/24	2.57	1.73	3.27	2.50	3.40	4.97	
Rip-Rap Req'd (Y/N)	N	N	N	N	N	Y	
Rip-Rap D_{50}	-	-	-	-	-	3"	
Note: Slope/Lengths from Plate 7-2.							

* DD-8c Removed

TABLE 8 (Continued)

Disturbed Ditch Design Summary							
Ditch	DD-9	DD-10	DD-11	DD-13a	DD-13b	DD-13c	DD-13d
Slope (%)	10.00	3.12	5.06	2.53	3.23	3.30	1.25
Length (ft.)	50	673	336	474	62	38	278
Manning's No.	0.035	0.035	0.035	0.035	0.035	0.035	0.035
Side Slope (H:V)	2:1	2:1	2:1	2:1	2:1	2:1	2:1
*Bottom Width (ft.)	0.00	1.00	0.00	1.00	1.00	1.00	3.00
Peak Flow 10/6 (cfs)	0.04	1.36	0.50	1.26	1.72	3.12	3.58
Peak Flow 10/24 (cfs)	0.07	2.49	0.92	2.30	3.22	5.71	6.87
Flow Depth (ft.) 10/6	0.11	0.50	0.32	0.50	0.54	0.67	0.85
Flow Depth (ft.) 10/24	0.13	0.62	0.39	0.63	0.68	0.84	1.08
Flow Area ($ft.^2$) 10/6	0.02	0.49	0.20	0.51	0.58	0.90	1.44
Flow Area ($ft.^2$) 10/24	0.03	0.79	0.31	0.79	0.93	1.42	2.35
Velocity (fps) 10/6	1.76	2.75	2.57	2.50	2.96	3.46	2.49
Velocity (fps) 10/24	2.03	3.20	2.99	2.90	3.46	4.02	2.93
Rip-Rap Req'd (Y/N)	N	N	N	N	N	N	N
Rip-Rap D_{50}	-	-	-	-	-	-	-
Note: Slope/Lengths from Plate 7-2.							

TABLE 8 (Continued)

Disturbed Ditch Design Summary							
Ditch	DD-13e	DD-14a	DD-14b	DD-15	DD-15b*	DD-16a	DD-16b
Slope (%)	4.78	8.72	3.15	9.70		2.97	6.06
Length (ft.)	460	390	540	593		370	165
Manning's No.	0.035	0.035	0.035	0.035		0.035	0.035
Side Slope (H:V)	2:1	2:1	2:1	2:1		2:1	2:1
*Bottom Width (ft.)	3.00	0.00	0.00	0.00		0.00	0.00
Peak Flow 10/6 (cfs)	3.77	0.23	0.56	0.79		0.11	0.17
Peak Flow 10/24 (cfs)	7.25	0.39	0.95	1.28		0.19	0.29
Flow Depth (ft.) 10/6	0.67	0.21	0.36	0.33		0.20	0.20
Flow Depth (ft.) 10/24	0.86	0.26	0.43	0.39		0.24	0.25
Flow Area ($ft.^2$) 10/6	0.91	0.09	0.25	0.22		0.08	0.08
Flow Area ($ft.^2$) 10/24	1.48	0.13	0.38	0.31		0.12	0.12
Velocity (fps) 10/6	4.17	2.59	2.21	3.68		1.44	2.10
Velocity (fps) 10/24	4.91	2.96	2.52	4.15		1.65	2.40
Rip-Rap Req'd (Y/N)	N	N	N	N		N	N
Rip-Rap D_{50}	-	-	-	-		-	-
Note: Slope/Lengths from Plate 7-2.							

*DD-15b Combined with DD-15

TABLE 8 (Continued)

Disturbed Ditch Design Summary							
Ditch	DD-17a	DD-17b	DD-18a	DD-18b	DD-20		
Slope (%)	2.68	4.12	2.86	3.54	4.88		
Length (ft.)	485	97	175	650	737		
Manning's No.	0.035	0.035	0.035	0.035	0.035		
Side Slope (H:V)	2:1	2:1	2:1	2:1	2:1		
*Bottom Width (ft.)	0.00	0.00	0.00	0.00	0.00		
Peak Flow 10/6 (cfs)	0.31	0.53	0.06	0.39	3.21		
Peak Flow 10/24 (cfs)	0.53	0.90	0.10	0.66	6.55		
Flow Depth (ft.) 10/6	0.29	0.44	0.16	0.30	0.63		
Flow Depth (ft.) 10/24	0.36	0.40	0.19	0.37	0.82		
Flow Area ($ft.^2$) 10/6	0.17	0.39	0.05	0.18	0.80		
Flow Area ($ft.^2$) 10/24	0.26	0.33	0.07	0.27	1.36		
Velocity (fps) 10/6	1.80	2.93	1.22	2.11	4.03		
Velocity (fps) 10/24	2.05	2.76	1.39	2.41	4.82		
Rip-Rap Req'd (Y/N)	N	N	N	N	N		
Rip-Rap D_{50}	-	-	-	-	-		
Note: Slope/Lengths from Plate 7-2.							

TABLE 9

Disturbed Culvert Design Summary						
Culvert	DC-1	DC-2	DC-3	DC-4	DC-5	DC-6
Slope (%)	13.33	10.77	50.00	10.50	10.50	10.50
Length (ft.)	30	65	130	15	20	30
Manning's No.	0.025	0.025	0.025	0.025	0.025	0.025
Peak Flow 10/6 (cfs)	1.06	1.31	0.11	0.09	0.09	0.09
Peak Flow 10/24 (cfs)	2.85	3.37	0.21	0.17	0.17	0.17
Diam. Proposed (ft.)	1.50	1.50	1.50	1.25	1.25	1.25
Velocity (fps) 10/24	8.00	7.78	5.83	3.26	3.26	3.26
Rip-Rap D_{50}	6"	6"	3"	-	-	-

Note: Slope/Lengths from Plate 7-5.
Culverts DC-3, -4, -5, and -6 replaced by DC-20, -21, and -22
Velocity: (Haestad Methods, Flowmaster Program)

TABLE 9 (Continued)

Disturbed Culvert Design Summary						
Culvert	DC-7	DC-8	DC-9	DC-10*	DC-11*	DC-12
Slope (%)	46.40	38.80	4.60			4.00
Length (ft.)	110	85	65			50
Manning's No.	0.025	0.025	0.025			0.025
Peak Flow 10/6 (cfs)	2.55	2.78	0.04			2.19
Peak Flow 10/24 (cfs)	4.52	5.67	0.07			3.73
Diam. Proposed (ft.)	1.50	2.00	1.50			1.50
Velocity (fps) 10/24	14.25	14.27	1.82			5.01
Rip-Rap D_{50}	12"	12"	-			3"
Note: Slope/Lengths from Plate 7-5. Velocity: (Haestad Methods, Flowmaster Program)						

* DC-10 and DC-11 Culverts removed due to grading changes.

TABLE 9 (Continued)

Disturbed Culvert Design Summary						
Culvert	DC-13	DC-14	DC-15	DC-16	DC-17	DC-18
Slope (%)	3.33	3.33	3.33	3.33	9.50	5.70
Length (ft.)	30	60	60	60	75	35
Manning's No.	0.025	0.025	0.025	0.025	0.025	0.025
Peak Flow 10/6 (cfs)	3.58	0.79	0.11	0.31	3.74	0.06
Peak Flow 10/24 (cfs)	6.87	1.34	0.19	0.53	7.86	0.10
Diam. Proposed (ft.)	2.00	1.50	1.25	1.25	2.00	1.50
Velocity (fps) 10/24	6.08	3.93	2.26	3.06	9.22	2.24
Rip-Rap D_{50}	3"	-	-	-	12"	-
Note: Slope/Lengths from Plate 7-5. Velocity: (Haestad Methods, Flowmaster Program)						

TABLE 9 (Continued)

Disturbed Culvert Design Summary						
Culvert	DC-19	DC-20	DC-21	DC-22	DC-23	DC-24
Slope (%)	2.50	9.63	3.40	28.30	7.79	6.06
Length (ft.)	40	270	250	106	154	165
Manning's No.	0.025	0.025	0.025	0.025	0.025	0.025
Peak Flow 10/6 (cfs)	0.76	1.81	0.12	2.61	2.73	2.95
Peak Flow 10/24 (cfs)	1.28	4.30	0.35	5.88	6.09	6.50
Diam. Proposed (ft.)	1.50	2.0	2.0	2.0	2.0	2.0
Velocity (fps) 10/24	3.50	7.79	2.56	12.51	7.99	4.98
Rip-Rap D_{50}	-	N/A	N/A	N/A	N/A	N/A

Note: Slope/Lengths from Plate 7-5.
Source: (Haestad Methods, Flowmaster Program)

TABLE 9 (Continued)

Disturbed Culvert Design Summary						
Culvert	DC-25	SP2-1	DC-26			
Slope (%)	8.26	0.50	7.50			
Length (ft.)	430	165	75			
Manning's No.	0.025	0.025	0.025			
Peak Flow 10/6 (cfs)	3.04	-	4.89			
Peak Flow 10/24 (cfs)	6.67	2.86*	9.80			
Diam. Proposed (ft.)	2.00	1.50	2.0			
Velocity (fps) 10/24	8.37	2.39	9.00			
Rip-Rap D_{50}	6"	N/A	6"			

Note: Slope/Lengths from Plate 7-5.
* SP2-1 Peak Flow is a 25/6 event
Source: (Haestad Methods, Flowmaster Program)

TABLE 10

Undisturbed Culvert Design Summary		
Culvert	UC-1	
Min. Slope (%)**	0.50	
Length (ft.)	480	
Manning's No.	0.025	
Peak Flow 10/6 (cfs)*	35.46	
Peak Flow 100/6 (cfs)*	49.09	
Diam. Proposed (ft.)	5.00	
Velocity (fps) 100/6	4.91	

* Note: Peak flow values include 25 year-6 hour flow from Sediment Pond 1 (see Tables 4 and 7).
** Pipe slope from Plate 7-6a.

DESIGN OF SEDIMENT CONTROL STRUCTURES

Design Specifications:

3.1 Design and Construction Specifications for Sedimentation Pond
3.2 Sediment Yield
3.3 Sediment Pond Volume
3.4 Sediment Pond Summary

Tables:

Table 11 Sediment Pond Design
Table 12a Sediment Pond #1 - Stage Volume Data
Table 12b Sediment Pond #2 - Stage Volume Data
Table 13a Sediment Pond #1 - Stage Discharge Data
Table 13b Sediment Pond #2 - Stage Discharge Data

Figures:

Figure 5.4 Depth of 2-year, 6-hour rainfall - Barfield et al.
Figure 5.15 Slope-effect Chart - Barfield et al.

NOTE: Sediment pond plans are based on the original final grading. During the interium Phase I period, not all drainage structures can be constructed. Therefore, a series of minor adjustments have been installed to make the system work on a temporary basis. These temporary measures will be replaced as part of the Phase II construction. As part of the Phase II construction, final plans will be prepared which will demonstrate the adequacy of the sediment pond structures.

3.1 Design and Construction Specifications for Sedimentation Pond

a) All construction of sedimentation ponds will be performed under the direction of a qualified, registered professional engineer.

b) The sediment pond #1 will be located in an existing low area where the Right Fork of Lila Canyon passes beneath the existing road. The existing road fill and culvert will be removed, and the pond embankment (road fill) will be reconstructed and compacted. The existing culvert will be replaced with UC-1 which will extend approximately 300' up the Right Fork of Lila Canyon. This culvert will be equipped with an inlet section and trash rack, and will allow undisturbed runoff and treated access road drainage to pass beneath the sediment pond. The majority of the pond will be in an existing channel area, and is therefore considered incised. The pond will be equipped with a culvert riser principal spillway with an oil skimmer, a decant, and a second culvert riser emergency spillway with an oil skimmer. Both spillways will discharge to the oversized (60") CMP culvert running beneath the pond.

c) The area of pond constructed shall be examined for topsoil, and where present in removable quantities, such soil shall be removed separately and stored in an approved topsoil storage location.

d) In areas where fill is to be placed for the pond impoundment structures, natural ground shall be removed to at least 12" below the base of the structure.

e) Native materials shall be used where practical. Fill will be placed in lifts not to exceed 6" and compacted prior to placement of next lift. Compaction of all fill materials shall be at least 95%.

f) Rip-rap or other protection (culverts, concrete, etc.) will be placed at all pond inlets to prevent scouring. Rip-rap will consist of substantial, angular (non-slaking) rock material of adequate size.

g) Decanting of the pond, as required, will be accomplished by use of a decant pipe with an inverted inlet as shown on Plate 7-6. Samples will be collected prior to decanting of the pond. If the quality of the water meets the requirements of the U.P.D.E.S. Permit, decanting will proceed. Discharge samples will be collected as per the approved U.P.D.E.S. Discharge Permit.

h) Slopes of the embankments shall not be steeper than 2h:1v, inside or outside, with a total of the inslope and outslope not less than 5h:1v, except where areas of the pond are incised.

i) External slopes of the impoundment will be planted with an approved seed mix to help prevent erosion and promote stability.

j) Top width of the embankment shall be not less than (H+35)/5, where H = Height of Dam in feet.

3.2 Sediment Yield

The Universal Soil Equation (USLE) was used to estimate sediment yield from disturbed areas. All soil loss from this area was assumed to be delivered to, and deposited in the sedimentation pond.

Erosion rate (A) in tons-per-acre-per-year is determined using the USLE as follows:

$$A = (R)\ (K)\ (LS)\ (CP)$$

Where the variables R, K, LS, and CP are defined as follows:

Variable "R" is the rainfall factor which can be estimated from $R = 27P^{2.2}$; where P is the 2-year, 6-hour precipitation value. P for the Lila Canyon area is 0.75" as shown in Figure 5.4, page 315, Barfield, et.al. 1983. Therefore, the estimated value of "R" for this area is 14.34.

Variable "K" is the soil erodibility factor. For disturbed areas, the "K" value is conservatively estimated to be 0.5. For disturbed runoff, but uncompacted and ungraded areas, "K" is estimated at 0.320. "K" is estimated to be 0.035 for undisturbed areas.

Variable "LS" is the length-slope factor. This figure was determined by applying the slope length and percentage for each sub-drainage area to the chart in Figure 5.15, p. 334, "Applied Hydrology and Sedimentology for Disturbed Areas", Barfield, Warner and Haan, 1983.

Variable "CP" is the control practice factor, which can be divided into a cover and practice factor. Values were determined from Appendix 5A, Barfield, et.al., 1983.

Site	CP Factor
Compacted Areas	1.20
Disturbed/Uncompacted Areas	0.20
Undisturbed Areas	0.15

The sediment volume is based on a density of 100 pounds per cubic foot of sediment.

SEDIMENT YIELD CALCULATIONS - USLE - Drainages to Sediment Ponds

Drainage	R	K	Area (ac)	Slope Length (Ft)	Slope (%)	LS	CP	A (T/ac)	Yield (ac-ft)
DA-1a	14.34	0.500	1.13	660	12.88	5.15	1.20	44.28	0.0230
DA-1b	14.34	0.500	0.38	365	15.62	5.19	1.20	44.67	0.0078
DA-3	14.34	0.500	0.25	170	9.41	1.62	1.20	13.98	0.0016
DA-5a	14.34	0.500	0.70	480	11.04	3.46	1.20	29.79	0.0096
DA-5b	14.34	0.500	1.15	430	6.05	1.40	1.20	12.07	0.0064
DA-5c	14.34	0.500	0.29	166	21.69	5.97	1.20	51.40	0.0068
DA-5d	14.34	0.500	0.42	390	11.79	3.45	1.20	29.69	0.0057
DA-5e	14.34	0.500	0.18	285	10.53	2.48	1.20	21.38	0.0018
DA-6a	14.34	0.500	0.74	245	20.41	6.57	1.20	56.51	0.0192
DA-6b	14.34	0.500	2.34	760	9.21	3.33	1.20	28.64	0.0308
DA-6c	14.34	0.500	2.51	690	10.14	3.65	1.20	31.44	0.0362
DA-7	14.34	0.500	2.68	630	5.56	1.52	1.20	13.12	0.0161
DA-8a	14.34	0.500	0.26	284	19.01	6.29	1.20	54.15	0.0065
DA-8b	14.34	0.500	0.63	670	7.76	2.45	1.20	21.06	0.0061
DA-9	14.34	0.500	0.05	100	11.00	1.57	1.20	13.52	0.0003
DA-10	14.34	0.500	2.10	715	5.59	1.64	0.01	0.12	0.0001
DA-11	14.34	0.500	0.82	480	4.58	0.87	1.20	7.49	0.0028
DA-13a	14.34	0.500	1.94	770	3.12	0.69	0.01	0.05	0.0000
DA-13b	14.34	0.500	1.36	450	16.67	6.40	1.20	55.07	0.0344
DA-13c	14.34	0.500	0.49	375	10.67	2.91	1.20	25.01	0.0056
DA-13d	14.34	0.500	0.40	460	4.78	0.90	1.20	7.74	0.0014
DA-14a	14.34	0.500	0.36	390	8.72	2.20	1.20	18.95	0.0031
DA-14b	14.34	0.500	0.75	50	2.96	0.23	1.20	1.97	0.0007
DA-15	14.34	0.500	1.02	810	7.16	2.41	1.20	20.73	0.0097
DA-16a	14.34	0.500	0.16	370	2.70	0.38	1.20	3.29	0.0002
DA-16b	14.34	0.500	0.09	210	6.19	1.01	1.20	8.69	0.0004
DA-17a	14.34	0.500	0.42	610	3.11	0.63	1.20	5.42	0.0010
DA-17b	14.34	0.500	0.07	100	5.00	0.53	1.20	4.58	0.0001
DA-18a	14.34	0.500	0.07	175	3.43	0.42	1.20	3.63	0.0001
DA-18b	14.34	0.500	0.44	650	3.69	0.77	1.20	6.64	0.0013
UA-2a	14.34	0.500	7.66	1360	74.26	112.10	0.15	120.56	0.4240
UA-2b	14.34	0.500	4.06	660	62.12	62.05	0.15	66.73	0.1244
UA-4	14.34	0.500	14.08	1950	30.51	35.92	0.15	38.63	0.24.97
UA-6a	14.34	0.500	1.13	230	34.78	15.27	0.15	16.42	0.0085
UA-6b	14.34	0.500	0.40	90	33.33	8.91	0.15	9.59	0.0018
UA-6c	1434	0.500	0.44	340	50.00	32.70	0.15	35.17	0.0071

* Disturbed Runoff / Uncompacted Area
** Paved Areas

3.3 Sediment Pond Volume

The volumes shown in Tables 11a and 11b are from the volumes calculated from the precipitation, runoff and sediment yield for a 10 year-24 hour precipitation event. The volumes were calculated based on the disturbed areas (and contributing undisturbed areas) runoff values, developed using the design parameters described in this section.

TABLE 11a

Sediment Pond #1 Design	
1. Use 1.90" for 10 year - 24 hour event.	
2. Runoff Volume - (4.17 ac-ft, from Table 5, 10yr/24hr Vol) =	4.17 ac-ft (1)
3. Sediment Storage Volume USLE 0.9491 ac-ft./yr. x 2 yrs. =	1.90 ac-ft
4. Total Required Pond Volume 4.17 + 1.90 =	6.07 ac-ft
5. Peak Flow (25 yr. - 6 hr. event) =	28.22 cfs (2)
6. Pond Design Volume @ Principle Spillway = (See Table 12a)	8.060 ac-ft

(1) This includes flow from UA-5 within mine boundary. There is a possibility that this undisturbed area may be needed if the surface facilities were to be expanded.

(2) This is to allow for flow from UA-5. There is a possibility that UA-5 may be needed if the surface facilities were to be expanded.

TABLE 12a

Sediment Pond #1 Stage/Volume Data				
Elevation	Area (sq. ft.)	Volume (sq. ft.)	Acc. Volume (ac. ft.)	Remarks
5829	0	0	0.00	Bottom of Pond
5830	5740	2870	0.07	
5831	17190	11465	0.33	
5832	23370	20280	0.79	
5833	26160	24765	1.36	
5834	28250	27025	1.99	Sediment Cleanout Level 5833.6
5835	30120	29185	2.66	Decant 5834.6 - 2.52 ac-ft
5836	32020	31070	3.37	
5837	34020	33020	4.13	Detention Storage - 4.17 ac-ft
5838	36060	35040	4.93	
5839	38160	37110	5.79	
5840	40330	39245	6.69	Principal Spillway
5841	42620	41475	7.64	Emergency Spillway
5842	44910	43765	8.64	
5843	47160	46035	9.70	Top of Embankment

TABLE 11b

Sediment Pond #2 Design	
1. Use 1.90" for 10 year - 24 hour event.	
2. Runoff Volume - (from Table 5, 10yr/24hr) =	0.39 ac-ft.
3. Sediment Storage Volume USLE 0.014 ac-ft./yr. x 3 yrs. =	0.04 ac-ft
4. Total Required Pond Volume 0.39 + 0.04 =	0.43 ac-ft
5. Peak Flow (25 yr. - 6 hr. event)* =	2.86 cfs
6. Pond Design Volume @ Principle Spillway = (See Table 12b)	1.08 ac-ft
* Peak Flow values from Table 5, sum of all contributing watersheds.	

TABLE 12b

Sediment Pond #2 Stage/Volume Data				
Elevation	Area (sq. ft.)	Volume (sq. ft.)	Acc. Volume (ac. ft.)	Remarks
5833.35	0	0	0.00	Bottom of Pond
5834	220	70	0.003	
5835	1100	660	0.02	
5835.5			0.04	Sediment Cleanout Level
5836	5420	2860	0.08	Decant
5838	6780	6495	0.36	
5840	7890	7610	0.69	
5841	8470	8175	0.88	
5842	9050	8755	1.08	Principal Spillway
5843	9660	9350	1.30	Emergency Spillway
5844	10270	9960	1.52	
5844.5	10500	5190	1.64	Top of Embankment

TABLE 13a

Sediment Pond #1 Stage/Discharge Data			
Head (ft.)	Q (cfs) Weir Controlled	Q (cfs) Orfice Controlled	Q (cfs) Pipe Flow Controlled
0.0	-	-	-
0.2	2.53	15.22	95.68
0.4	7.15	21.53	96.23
0.6	13.14	26.36	96.77
0.8	20.23	30.44	97.31
1.0	28.27	34.04	97.85
1.2	37.17	37.28	98.38
1.4	46.84	40.27	98.91
1.6	57.22	43.05	98.91
1.8	68.28	45.66	99.44
2.0	79.97	48.13	99.97

Note: 1- 25 year - 6 hour flow = 28.22 cfs.
2- Flow will be weir controlled at a head of 0.99' over riser inlet.

Weir Controlled

$Q = CLH^{1.5}$; where: C= 3.0, L= Circumference of Riser = 9.4248', R=1.5'

Orfice Controlled

$Q = C'a\ (2gH)^{0.5}$; where: C= 0.6, a= Area of Riser = 7.0686 ft^2, R=1.5', g= 32.2 ft/sec^2

Pipe Flow Controlled

$Q = \frac{a\ (2gH')^{0.5}}{(1+Ke+Kb+KcL)^{0.5}}$; where

a = Area of Pipe = 7.07 ft^2, R = 1.5'
H' = Head = H + 14.5 (Riser) + 0.35 (Slope) + 0.6*4 (barrel height)
Ke = 1.0
Kb = 0.5
Kc = 0.043
L = 70'

TABLE 13b

Sediment Pond #2 Stage/Discharge Data			
Head (ft.)	Q (cfs) Weir Controlled	Q (cfs) Orfice Controlled	Q (cfs) Pipe Flow Controlled
0.0	-	-	-
0.2	0.84	1.69	5.81
0.4	2.38	2.39	5.88
0.6	4.38	2.93	5.95
0.8	6.74	3.38	6.02
1.0	9.42	3.78	6.09
1.2	12.39	4.14	6.16
1.4	15.61	4.47	6.22
1.6	19.07	4.78	6.29
1.8	22.76	5.07	6.36
2.0	26.66	5.35	6.42

Note: 1- 25 year - 6 hour flow = 2.86 cfs.
2- Flow will be orifice controlled at a head of 0.57' over riser inlet.

Weir Controlled

$Q = CLH^{1.5}$; where: C= 3.0, L= Circumference of Riser =3.14', R=0.5'

Orfice Controlled

$Q = C'a\ (2gH)^{0.5}$; where: C= 0.6, a= Area of Riser = 0.79 ft^2, R=0.5', g= 32.2 ft/sec^2

Pipe Flow Controlled

$Q = \frac{a\ (2gH')^{0.5}}{(1+Ke+Kb+KcL)^{0.5}}$; where a = Area of Pipe = 0.79 ft^2, R = 0.5'

H' = Head = H + 6.0 (Riser) + 0.8 (Slope) + 0.6*2 (barrel height)

Ke = 1.0

Kb = 0.5

Kc = 0.043

L = 160'

3.4 Sediment Pond Summary

a) The sedimentation ponds have been designed to contain the disturbed area (and contributing undisturbed area) runoff from a 10 year-24 hour precipitation event, along with multiple years of sediment storage capacity. Runoff to the ponds will be directed by various ditches and culverts as described in the plan.

b) The required volume for Sediment Pond #1 is calculated at 6.07 acre feet, including 2 years of sediment storage. The proposed sediment pond size will have a volume of approximately 8.06 acre feet (at the principal spillway), which is more than adequate. The required volume for Sediment Pond #2 is calculated at 0.43 acre feet, including 3 years of sediment storage. The proposed sediment pond size will have a volume of approximately 1.08 acre feet (at the principal spillway), which is more than adequate.

c) The ponds will meet a theoretical detention time of 24 hours. Both are equipped with a decant, a culvert principal spillway and a culvert emergency spillway. Any discharge from the ponds will be in accordance with the approved UPDES Permit.

d) The pond inlets will be protected from erosion, and the spillways will discharge into the natural drainages in a controlled manner.

e) The ponds are temporary, and will be removed upon final reclamation of the property.

f) The ponds will be constructed according to the regulations and under supervision of a Registered, Professional Engineer.

DESIGN OF DRAINAGE CONTROL STRUCTURES FOR RECLAMATION

Reclamation Hydrology:

4.1 General
4.2 Reclamation Area Drainage Control

Tables:

Table 14 Final Reclamation - Drainage Areas Contributing to Structures
Table 15 Final Reclamation - Drainage Structure Flow Summary
Table 16 Final Reclamation - Reclamation Structure Design Parameters
Table 17 Final Reclamation - Reclamation Structure Flow Calculations

Figures:

Figures 5 Filter Fence Construction

Reclamation Hydrology

4.1 General

Upon completion of operations at the Lila Canyon Minesite, the portals will be sealed and backfilled and all structures will be removed except for the sediment ponds, bypass culvert UC-1, reclamation ditches and temporary sediment controls such as silt fences or straw bales.

Any refuse or mine development waste previously deposited under the approved plan will also be left in place. Concrete will be buried beneath at least 2' of non-toxic, non-acid material. Any potentially toxic or acid-forming material buried on site will be covered with a minimum of 4' of material.

The sediment ponds, and all remaining drainage controls will be removed upon completion of Phase II Bond Release.

4.2 Reclamation Area Drainage Control

During the initial phase of reclamation, all drainage controls will be removed with the exception of the two sediment ponds, bypass culvert UC-1, reclaimed ditches RD-1 and RD-2 and temporary sediment controls such as straw bales or silt fences installed in the undisturbed drainages.

As undisturbed drainage culverts are removed, a minimum of two straw bale or silt fence barriers will be installed downstream of each location for sediment control purposes.

Disturbed areas will be regraded and reclaimed ditches RD-1 and RD-2 will be installed to collect the runoff from the site area and direct it to the outlet structures (see Plate 7-7).

When the vegetation and sediment contribution levels meet requirements for Phase II Bond Release, a series of at least three straw bale or silt fence barriers will be placed downstream of the sediment pond outlets. All upstream sediment controls will be removed. Reclaimed ditches RD-1 and RD-2 will also be removed, regraded and reseeded. Culvert UC-1 will be cut off at the location of the principal pond spillway.

The portion of culvert UC-1 remaining beneath the road will be left as a permanent drainage control. The culvert will be equipped with an inlet section and rip-rapped headwall. The culvert is adequately sized to safely pass runoff from a 100 year - 6 hour event, as shown in Table 10. To ensure that state of the art technology is incorporated, the final reclamation plans for the sedimentation pond areas will be submitted prior to commencement of final reclamation of this area.

The remainder of culvert UC-1 will be removed, and the natural channel restored through the sediment pond #1 area. The sediment pond structures will also be removed, the pond areas regraded as necessary and reseeded. The pond #1 embankment will remain as a permanent feature, since the existing (and proposed future) road through the area passes over the embankment.

Following the successful establishment of vegetation and when effluent standards are met, the sediment ponds will be removed. The same methodologies relative to recontouring, top soil application and seeding will be utilized in grading and revegetating the pond areas as outlined in Chapters 2, 5, and Appendix 5-8.

The pond embankment will be narrowed to facilitate the even character of the Lila Canyon Road. The 60 inch bypass culvert (UC-1) will be removed to within six feet of the road embankment. A newly formed channel will be constructed at an approximate four percent grade to intercept the inlet of the culvert at its intersection of the road. The road embankment and associated new channel will be armored by the Operator with an underlayment of filter gravel, with D_{50}-30 inch rip-rap. The new area of disturbance including the newly formed channel will have top soil spread in and around the rip-rap. The Operator will use the same seeding and mulching methods described in Appendix 5-8 will be used on this area as well. See Figure 4 for a detailed design.

TABLE 14

Final Reclamation Drainage Areas Contributing to Structures	
Channel	Contributing Watershed/Structure
RD-1	RW-1
RD-2	RW-2
UC-1	UA-1, UA-4, RD-1

TABLE 15

Final Reclamation Drainage Structure Flow Summary	
Channel	*100/6 Flow (cfs)
RD-1	13.26
RD-2	10.89
UC-1	**72.62

* CN = 83.
** Combined flow for watersheds UA-1, UA-4, and RW-2.

TABLE 16

Final Reclamation Reclamation Structure Design Parameters					
Channel	Bottom Width (ft.)	Side Slope H:V	Slope %	Reclaimed Depth (ft.)	Manning's No.
RD-1	3	2:1	5.00	1.5	0.035
RD-2	3	2:1	10.00	1.5	0.035
UC-1	60" Diam.	-	0.90*	60" Diam.	0.025

* Pipe slope for Plate 7-6

TABLE 17

Final Reclamation Reclamation Structure Flow Calculations			
Channel	RD-1	RD-2	UC-1
100 year - 6 hour event (in.)	1.90	1.90	1.90
Peak Flow (cfs)	13.26	10.89	72.62
Velocity (fps)	5.44	6.52	6.74
Required Area ($ft.^2$)	2.44	1.67	10.80
Flow Depth (ft.)	0.58	0.43	2.69

Alternate Sediment Control for Lila Surface Facilities

Based on the topography of the site and the improvements required for development of the mine facilities, there are small portions of the site drainage that can not be reasonably collected and drained to a sediment pond. The Division allows an exemption from standard sediment control rules as considered under R645-301-742.240 for these areas. The criteria for the exemption:

> "may be granted if the disturbed drainage area within the total disturbed area is small and the operator demonstrates that siltation structures and alternate sediment control measures are not necessary for drainage from the disturbed areas to meet the effluent limitations under R645-301-751 or the applicable Utah and federal water quality standards for the receiving waters."

These areas that are exempted are referred to as Alternate Sediment Control Areas or "ASCAs".

There are several areas of the mine facilities that can not be easily drained to a sediment pond. These are:

- slope below water treatment area,
- slopes below roads or pads,
- ventilation break-outs,
- and topsoil storage area sites.

5.1 ASCA Areas

For the Lila mine site, the following will be considered ASCA areas:

- slope below water treatment area,
- slopes below roads or pads,
- and topsoil storage area sites.

For these areas sediment control will be accomplished with a combination of one or more of the following: berms, silt fences, and straw bales. Due to lack of final engineering details, the exact location of the berms, silt fences, and subsequent erosion techniques will be determined in field with the approval of UDOGM. The ASCA's will have berms, silt fences, and straw bales removed and be seeded upon final reclamation.

5.1.1 Water Treatment Area

The outslope of the water treatment pad will have a silt fence located along the disturbed area boundary to treat the runoff from the slope. While some portions of this area will be disturbed as a result of the fill material placed for the pad and road construction, the major portion of this area is expected to remain undisturbed. As an added protection, the portions of the area that are disturbed by the fill placement will be covered with a erosion control mat to minimize the erosion from this slope and that area seeded to aid in the establishment of a vegetative cover.

RUNOFF CALCULATIONS:

Acreage:	0.37 acres
Design Storm:10 year/24 hour:	1.90"
CN:	90
S:	1.111

$$Q = \frac{(P-0.2S)^2}{P+0.8S} = 1.01\text{" of runoff}$$

Total run-off = 0.03 acre feet

5.1.2 Road and Pad Slopes

For portions of the outslope of the portal access road and coal pads, a silt fence will be located along the toe of the slope to treat the runoff. While some portions of this area will be disturbed as a result of the fill material placed for the pad and road construction, the major portion of this area is expected to remain undisturbed. As an added protection, the portions of the area that are disturbed by the fill placement will be covered with a erosion control mat to minimize the erosion from this slope and that area seeded to aid in the establishment of a vegetative cover.

RUNOFF CALCULATIONS:

Acreage:	1.37 acres
Design Storm:10 year/24 hour:	1.90"
CN:	90
S:	1.111

$$Q = \frac{(P-0.2S)^2}{P+0.8S} = 1.01\text{" of runoff}$$

Total run-off = 0.12 acre feet

5.1.3 Topsoil Storage Area

The topsoil collected from the mine site will be placed in the topsoil storage area. To provide extra sediment control for this site, a berm will be constructed to enclose the storage site. The berm will be constructed a minimum of two feet high and have 2:1 side slopes. The berm will control the flow up to a 10 year-24 hour precipitation event. Silt fencing materials will be selectively placed to help control run-off. The berm will be stabilized with vegetation to prevent erosion.

The outside of the containment berm will be protected with a silt fence or gravel. The gravel, if used, would help augment the revegetation. Construction details of the silt fence/filter fence are shown in Figure 5.

RUNOFF CALCULATIONS:

Acreage:	2.61 acres
Design Storm:10 year/24 hour:	1.90"
CN:	90
S:	1.111

$$Q = \frac{(P-0.25S)^2}{P+0.8S} = 1.01'' \text{ of runoff}$$

Total run-off = 0.22 acre feet

5.2 Non-ASCA Areas

There are two areas that are not considered ASCA areas. These are the north and south ventilation break outs. The ventilation breakouts are just punch outs and will have insignificant disturbance associated with them (see Plates 5-2 and 7-2). Due to the configuration of these sites, there will be no offsite runoff. The slope of the pads are back into the portals, therefore the limited runoff will be toward the portals. These pad areas are very limited:

North Pad	20'x60'	1200 ft^2
South Pads	3 @ 20'x20' each	400 ft^2 each or 1200 ft^2 total

Based on these drainage areas, even assuming that 100% of the rainfall runs off, the runoff amounts are extremely limited:

North Pad

Precip	1.9 in
CN	100
Q	0.0044 AF or 190 ft^3 or 1422 gals

South Pads 1, 2, & 3

Precip	1.9 in
CN	100
Q	0.0015 AF or 65 ft^3 or 489 gals for each portal
	0.0045 AF or 196 ft^3 or 1467 gals for all 3 total

Due to this small amount of water, it is assumed, as these breakouts are intakes for ventilation, that the majority of this water will evaporate due to the air movement into the portals and that portion that is not evaporated will flow to the sumps underground and be treated with the mine water prior to any discharge.

Additionally, as these pads are mainly bedrock surfaces that form the bottom of the portal opening, there is little potential for any runoff to erode or carry significant sediment. Therefore, no significant sediment load nor water quality degradation will be developed.

Based on the plan proposed, by allowing the runoff from the pads to flow to the portals, only a very limited volume of water would be introduced underground and no additional disturbance on the downslope of these area would be required. The water quality standards and effluent limitations would be met. The flow would be at a known maximum rate and that rate is easily within the limits of what can be accommodated by the underground workings. Therefore the intent of protecting the environment from operational drainage will be achieved and no additional disturbance will be required.

Lila Canyon Mine
Watershed Calculations

Lila Canyon Mine
Ditch And Culvert Calculations

Lila Canyon Mine
Watershed Calculations

Project Title = LILA CANYON DA-1a (10/6)

WATERSHED HYDROGRAPH

Inflow into structure # 1

Structure type: Null

-- Watershed data for watershed # 1

Curve number = 90.0

Area = 1.1 acres

Hydraulic length = 660.00 feet

Elevation change = 85.0 feet.

Concentration time = 0.04 hours

Unit hydrograph type = Disturbed

-- Total Area = 1.1 acres

-- Storm data

Total precipitation = 1.3 inches

Storm type = SCS 6 hour design storm

Peak Discharge = 0.52 cfs

Discharge volume = 0.05 acre ft

Project Title = LILA CANYON DA-1a (25/6)

WATERSHED HYDROGRAPH

Inflow into structure # 1

Structure type: Null

-- Watershed data for watershed # 1

Curve number = 90.0

Area = 1.1 acres

Hydraulic length = 660.00 feet

Elevation change = 85.0 feet.

Concentration time = 0.04 hours

Unit hydrograph type = Disturbed

-- Total Area = 1.1 acres

-- Storm data

Total precipitation = 1.5 inches

Storm type = SCS 6 hour design storm

Peak Discharge = 0.66 cfs

Discharge volume = 0.06 acre ft

Project Title = LILA CANYON DA-1a (100/6)

WATERSHED HYDROGRAPH

Inflow into structure # 1

Structure type: Null

-- Watershed data for watershed # 1

Curve number = 90.0

Area = 1.1 acres

Hydraulic length = 660.00 feet

Elevation change = 85.0 feet.

Concentration time = 0.04 hours

Unit hydrograph type = Disturbed

-- Total Area = 1.1 acres

-- Storm data

Total precipitation = 1.9 inches

Storm type = SCS 6 hour design storm

Peak Discharge = 0.97 cfs

Discharge volume = 0.10 acre ft

Project Title = LILA CANYON DA-1a (10/24)

WATERSHED HYDROGRAPH

Inflow into structure # 1

Structure type: Null

-- Watershed data for watershed # 1

Curve number = 90.0

Area = 1.1 acres

Hydraulic length = 660.00 feet

Elevation change = 85.0 feet.

Concentration time = 0.04 hours

Unit hydrograph type = Disturbed

-- Total Area = 1.1 acres

-- Storm data

Total precipitation = 1.9 inches

Storm type = SCS Type 2 storm, 24 hour storm

Peak Discharge = 1.05 cfs

Discharge volume = 0.10 acre ft

Project Title = LILA CANYON DA-1b (10/6)

WATERSHED HYDROGRAPH

Inflow into structure # 1

Structure type: Null

-- Watershed data for watershed # 1

Curve number = 90.0

Area = 0.4 acres

Hydraulic length = 365.00 feet

Elevation change = 57.0 feet.

Concentration time = 0.02 hours

Unit hydrograph type = Disturbed

-- Total Area = 0.4 acres

-- Storm data

Total precipitation = 1.3 inches

Storm type = SCS 6 hour design storm

Peak Discharge = 0.15 cfs

Discharge volume = 0.02 acre ft

Project Title = LILA CANYON DA-1b (25/6)

WATERSHED HYDROGRAPH

Inflow into structure # 1

Structure type: Null

-- Watershed data for watershed # 1

Curve number = 90.0

Area = 0.4 acres

Hydraulic length = 365.00 feet

Elevation change = 57.0 feet.

Concentration time = 0.02 hours

Unit hydrograph type = Disturbed

-- Total Area = 0.4 acres

-- Storm data

Total precipitation = 1.3 inches

Storm type = SCS 6 hour design storm

Peak Discharge = 0.19 cfs

Discharge volume = 0.02 acre ft

Project Title = LILA CANYON DA-1b (100/6)

WATERSHED HYDROGRAPH

Inflow into structure # 1

Structure type: Null

-- Watershed data for watershed # 1

Curve number = 90.0

Area = 0.4 acres

Hydraulic length = 365.00 feet

Elevation change = 57.0 feet.

Concentration time = 0.02 hours

Unit hydrograph type = Disturbed

-- Total Area = 0.4 acres

-- Storm data

Total precipitation = 1.9 inches

Storm type = SCS 6 hour design storm

Peak Discharge = 0.28 cfs

Discharge volume = 0.03 acre ft

Project Title = LILA CANYON DA-1b (10/24)

WATERSHED HYDROGRAPH

Inflow into structure # 1

Structure type: Null

-- Watershed data for watershed # 1

Curve number = 90.0

Area = 0.4 acres

Hydraulic length = 365.00 feet

Elevation change = 57.0 feet.

Concentration time = 0.02 hours

Unit hydrograph type = Disturbed

-- Total Area = 0.4 acres

-- Storm data

Total precipitation = 1.9 inches

Storm type = SCS Type 2 storm, 24 hour storm

Peak Discharge = 0.31 cfs

Discharge volume = 0.03 acre ft

Project Title = LILA CANYON DA-3 (10/6)

WATERSHED HYDROGRAPH

Inflow into structure # 1

Structure type: Null

-- Watershed data for watershed # 1

Curve number = 90.0

Area = 0.3 acres

Hydraulic length = 170.00 feet

Elevation change = 16.0 feet.

Concentration time = 0.02 hours

Unit hydrograph type = Disturbed

-- Total Area = 0.3 acres

-- Storm data

Total precipitation = 1.3 inches

Storm type = SCS 6 hour design storm

Peak Discharge = 0.11 cfs

Discharge volume = 0.01 acre ft

Project Title = LILA CANYON DA-3 (25/6)

WATERSHED HYDROGRAPH

Inflow into structure # 1

Structure type: Null

-- Watershed data for watershed # 1

Curve number = 90.0

Area = 0.3 acres

Hydraulic length = 170.00 feet

Elevation change = 16.0 feet.

Concentration time = 0.02 hours

Unit hydrograph type = Disturbed

-- Total Area = 0.3 acres

-- Storm data

Total precipitation = 1.5 inches

Storm type = SCS 6 hour design storm

Peak Discharge = 0.14 cfs

Discharge volume = 0.02 acre ft

Project Title = LILA CANYON DA-3 (100/6)

WATERSHED HYDROGRAPH

Inflow into structure # 1

Structure type: Null

-- Watershed data for watershed # 1

Curve number = 90.0

Area = 0.3 acres

Hydraulic length = 170.00 feet

Elevation change = 16.0 feet.

Concentration time = 0.02 hours

Unit hydrograph type = Disturbed

-- Total Area = 0.3 acres

-- Storm data

Total precipitation = 1.9 inches

Storm type = SCS 6 hour design storm

Peak Discharge = 0.20 cfs

Discharge volume = 0.03 acre ft

Project Title = LILA CANYON DA-3 (10/24)

WATERSHED HYDROGRAPH

Inflow into structure # 1

Structure type: Null

-- Watershed data for watershed # 1

Curve number = 90.0

Area = 0.3 acres

Hydraulic length = 170.00 feet

Elevation change = 16.0 feet.

Concentration time = 0.02 hours

Unit hydrograph type = Disturbed

-- Total Area = 0.3 acres

-- Storm data

Total precipitation = 1.9 inches

Storm type = SCS Type 2 storm, 24 hour storm

Peak Discharge = 0.21 cfs

Discharge volume = 0.03 acre ft

Project Title = LILA CANYON DA-5a (10/6)

WATERSHED HYDROGRAPH

Inflow into structure # 1

Structure type: Null

-- Watershed data for watershed # 1

Curve number = 93.0

Area = 0.7 acres

Hydraulic length = 480.00 feet

Elevation change = 53.0 feet.

Concentration time = 0.04 hours

Unit hydrograph type = Disturbed

-- Total Area = 0.7 acres

-- Storm data

Total precipitation = 1.3 inches

Storm type = SCS 6 hour design storm

Peak Discharge = 0.39 cfs

Discharge volume = 0.04 acre ft

Project Title = LILA CANYON DA-5a (25/6)

WATERSHED HYDROGRAPH

Inflow into structure # 1

Structure type: Null

-- Watershed data for watershed # 1

Curve number = 93.0

Area = 0.7 acres

Hydraulic length = 480.00 feet

Elevation change = 53.0 feet.

Concentration time = 0.04 hours

Unit hydrograph type = Disturbed

-- Total Area = 0.7 acres

-- Storm data

Total precipitation = 1.5 inches

Storm type = SCS 6 hour design storm

Peak Discharge = 0.49 cfs

Discharge volume = 0.05 acre ft

Project Title = LILA CANYON DA-5a (100/6)

WATERSHED HYDROGRAPH

Inflow into structure # 1

Structure type: Null

-- Watershed data for watershed # 1

Curve number = 93.0

Area = 0.7 acres

Hydraulic length = 480.00 feet

Elevation change = 53.0 feet.

Concentration time = 0.04 hours

Unit hydrograph type = Disturbed

-- Total Area = 0.7 acres

-- Storm data

Total precipitation = 1.9 inches

Storm type = SCS 6 hour design storm

Peak Discharge = 0.68 cfs

Discharge volume = 0.07 acre ft

Project Title = LILA CANYON DA-5a (10/24)

WATERSHED HYDROGRAPH

Inflow into structure # 1

Structure type: Null

-- Watershed data for watershed # 1

Curve number = 93.0

Area = 0.7 acres

Hydraulic length = 480.00 feet

Elevation change = 53.0 feet.

Concentration time = 0.04 hours

Unit hydrograph type = Disturbed

-- Total Area = 0.7 acres

-- Storm data

Total precipitation = 1.9 inches

Storm type = SCS Type 2 storm, 24 hour storm

Peak Discharge = 0.72 cfs

Discharge volume = 0.07 acre ft

Project Title = LILA CANYON DA-5b (10/6)

WATERSHED HYDROGRAPH

Inflow into structure # 1

Structure type: Null

-- Watershed data for watershed # 1

Curve number = 93.0

Area = 1.1 acres

Hydraulic length = 430.00 feet

Elevation change = 26.0 feet.

Concentration time = 0.04 hours

Unit hydrograph type = Disturbed

-- Total Area = 1.1 acres

-- Storm data

Total precipitation = 1.3 inches

Storm type = SCS 6 hour design storm

Peak Discharge = 0.68 cfs

Discharge volume = 0.07 acre ft

Project Title = LILA CANYON DA-5b (25/6)

WATERSHED HYDROGRAPH

Inflow into structure # 1

Structure type: Null

-- Watershed data for watershed # 1

Curve number = 93.0

Area = 1.1 acres

Hydraulic length = 430.00 feet

Elevation change = 26.0 feet.

Concentration time = 0.04 hours

Unit hydrograph type = Disturbed

-- Total Area = 1.1 acres

-- Storm data

Total precipitation = 1.5 inches

Storm type = SCS 6 hour design storm

Peak Discharge = 0.84 cfs

Discharge volume = 0.08 acre ft

Project Title = LILA CANYON DA-5b (100/6)

WATERSHED HYDROGRAPH

Inflow into structure # 1

Structure type: Null

-- Watershed data for watershed # 1

Curve number = 93.0

Area = 1.1 acres

Hydraulic length = 430.00 feet

Elevation change = 26.0 feet.

Concentration time = 0.04 hours

Unit hydrograph type = Disturbed

-- Total Area = 1.1 acres

-- Storm data

Total precipitation = 1.9 inches

Storm type = SCS 6 hour design storm

Peak Discharge = 1.16 cfs

Discharge volume = 0.12 acre ft

Project Title = LILA CANYON DA-5b (10/24)

WATERSHED HYDROGRAPH

Inflow into structure # 1

Structure type: Null

-- Watershed data for watershed # 1

Curve number = 93.0

Area = 1.1 acres

Hydraulic length = 430.00 feet

Elevation change = 26.0 feet.

Concentration time = 0.04 hours

Unit hydrograph type = Disturbed

-- Total Area = 1.1 acres

-- Storm data

Total precipitation = 1.9 inches

Storm type = SCS Type 2 storm, 24 hour storm

Peak Discharge = 1.23 cfs

Discharge volume = 0.12 acre ft

Project Title = LILA CANYON DA-5c (10/6)

WATERSHED HYDROGRAPH

Inflow into structure # 1

Structure type: Null

-- Watershed data for watershed # 1

Curve number = 93.0

Area = 0.3 acres

Hydraulic length = 166.00 feet

Elevation change = 36.0 feet.

Concentration time = 0.01 hours

Unit hydrograph type = Disturbed

-- Total Area = 0.3 acres

-- Storm data

Total precipitation = 1.3 inches

Storm type = SCS 6 hour design storm

Peak Discharge = 0.12 cfs

Discharge volume = 0.02 acre ft

Project Title = LILA CANYON DA-5c (25/6)

WATERSHED HYDROGRAPH

Inflow into structure # 1

Structure type: Null

-- Watershed data for watershed # 1

Curve number = 93.0

Area = 0.3 acres

Hydraulic length = 166.00 feet

Elevation change = 36.0 feet.

Concentration time = 0.01 hours

Unit hydrograph type = Disturbed

-- Total Area = 0.3 acres

-- Storm data

Total precipitation = 1.5 inches

Storm type = SCS 6 hour design storm

Peak Discharge = 0.15 cfs

Discharge volume = 0.02 acre ft

Project Title = LILA CANYON DA-5c (100/6)

WATERSHED HYDROGRAPH

Inflow into structure # 1

Structure type: Null

-- Watershed data for watershed # 1

Curve number = 93.0

Area = 0.3 acres

Hydraulic length = 166.00 feet

Elevation change = 36.0 feet.

Concentration time = 0.01 hours

Unit hydrograph type = Disturbed

-- Total Area = 0.3 acres

-- Storm data

Total precipitation = 1.9 inches

Storm type = SCS 6 hour design storm

Peak Discharge = 0.20 cfs

Discharge volume = 0.03 acre ft

Project Title = LILA CANYON DA-5c (10/24)

WATERSHED HYDROGRAPH

Inflow into structure # 1

Structure type: Null

-- Watershed data for watershed # 1

Curve number = 93.0

Area = 0.3 acres

Hydraulic length = 166.00 feet

Elevation change = 36.0 feet.

Concentration time = 0.01 hours

Unit hydrograph type = Disturbed

-- Total Area = 0.3 acres

-- Storm data

Total precipitation = 1.9 inches

Storm type = SCS Type 2 storm, 24 hour storm

Peak Discharge = 0.21 cfs

Discharge volume = 0.03 acre ft

Project Title = LILA CANYON DA-5d (10/6)

WATERSHED HYDROGRAPH

Inflow into structure # 1

Structure type: Null

-- Watershed data for watershed # 1

Curve number = 93.0

Area = 0.4 acres

Hydraulic length = 390.00 feet

Elevation change = 46.0 feet.

Concentration time = 0.03 hours

Unit hydrograph type = Disturbed

-- Total Area = 0.4 acres

-- Storm data

Total precipitation = 1.3 inches

Storm type = SCS 6 hour design storm

Peak Discharge = 0.22 cfs

Discharge volume = 0.02 acre ft

Project Title = LILA CANYON DA-5d (25/6)

WATERSHED HYDROGRAPH

Inflow into structure # 1

Structure type: Null

-- Watershed data for watershed # 1

Curve number = 93.0

Area = 0.4 acres

Hydraulic length = 390.00 feet

Elevation change = 46.0 feet.

Concentration time = 0.03 hours

Unit hydrograph type = Disturbed

-- Total Area = 0.4 acres

-- Storm data

Total precipitation = 1.3 inches

Storm type = SCS 6 hour design storm

Peak Discharge = 0.28 cfs

Discharge volume = 0.03 acre ft

Project Title = LILA CANYON DA-5d (100/6)

WATERSHED HYDROGRAPH

Inflow into structure # 1

Structure type: Null

-- Watershed data for watershed # 1

Curve number = 93.0

Area = 0.4 acres

Hydraulic length = 390.00 feet

Elevation change = 46.0 feet.

Concentration time = 0.03 hours

Unit hydrograph type = Disturbed

-- Total Area = 0.4 acres

-- Storm data

Total precipitation = 1.9 inches

Storm type = SCS 6 hour design storm

Peak Discharge = 0.39 cfs

Discharge volume = 0.04 acre ft

Project Title = LILA CANYON DA-5c (10/24)

WATERSHED HYDROGRAPH

Inflow into structure # 1

Structure type: Null

-- Watershed data for watershed # 1

Curve number = 93.0

Area = 0.4 acres

Hydraulic length = 390.00 feet

Elevation change = 46.0 feet.

Concentration time = 0.03 hours

Unit hydrograph type = Disturbed

-- Total Area = 0.4 acres

-- Storm data

Total precipitation = 1.9 inches

Storm type = SCS Type 2 storm, 24 hour storm

Peak Discharge = 0.41 cfs

Discharge volume = 0.04 acre ft

Project Title = LILA CANYON DA-5e (10/6)

WATERSHED HYDROGRAPH

Inflow into structure # 1

Structure type: Null

-- Watershed data for watershed # 1

Curve number = 93.0

Area = 0.2 acres

Hydraulic length = 285.00 feet

Elevation change = 30.0 feet.

Concentration time = 0.02 hours

Unit hydrograph type = Disturbed

-- Total Area = 0.2 acres

-- Storm data

Total precipitation = 1.3 inches

Storm type = SCS 6 hour design storm

Peak Discharge = 0.09 cfs

Discharge volume = 0.01 acre ft

Project Title = LILA CANYON DA-5c (25/6)

WATERSHED HYDROGRAPH

Inflow into structure # 1

Structure type: Null

-- Watershed data for watershed # 1

Curve number = 93.0

Area = 0.2 acres

Hydraulic length = 285.00 feet

Elevation change = 30.0 feet.

Concentration time = 0.02 hours

Unit hydrograph type = Disturbed

-- Total Area = 0.2 acres

-- Storm data

Total precipitation = 1.5 inches

Storm type = SCS 6 hour design storm

Peak Discharge = 0.11 cfs

Discharge volume = 0.01 acre ft

Project Title = LILA CANYON DA-5e (100/6)

WATERSHED HYDROGRAPH

Inflow into structure # 1

Structure type: Null

-- Watershed data for watershed # 1

Curve number = 93.0

Area = 0.2 acres

Hydraulic length = 285.00 feet

Elevation change = 30.0 feet.

Concentration time = 0.02 hours

Unit hydrograph type = Disturbed

-- Total Area = 0.2 acres

-- Storm data

Total precipitation = 1.9 inches

Storm type = SCS 6 hour design storm

Peak Discharge = 0.16 cfs

Discharge volume = 0.02 acre ft

Project Title = LILA CANYON DA-5c (10/24)

WATERSHED HYDROGRAPH

Inflow into structure # 1

Structure type: Null

-- Watershed data for watershed # 1

Curve number = 93.0

Area = 0.2 acres

Hydraulic length = 285.00 feet

Elevation change = 30.0 feet.

Concentration time = 0.02 hours

Unit hydrograph type = Disturbed

-- Total Area = 0.2 acres

-- Storm data

Total precipitation = 1.9 inches

Storm type = SCS Type 2 storm, 24 hour storm

Peak Discharge = 0.17 cfs

Discharge volume = 0.02 acre ft

Project Title = Lila Canyon DA-6a (10/6)

WATERSHED HYDROGRAPH

Inflow into structure # 1

Structure type: Null

-- Watershed data for watershed # 1

Curve number = 83.0

Area = 0.7 acres

Hydraulic length = 245.00 feet

Elevation change = 50.0 feet.

Concentration time = 0.02 hours

Unit hydrograph type = Disturbed

-- Total Area = 0.7 acres

-- Storm data

Total precipitation = 1.3 inches

Storm type = SCS 6 hour design storm

Peak Discharge = 0.12 cfs

Discharge volume = 0.02 acre ft

Project Title = Lila Canyon DA-6a (25/6)

WATERSHED HYDROGRAPH

Inflow into structure # 1

Structure type: Null

-- Watershed data for watershed # 1

Curve number = 83.0

Area = 0.7 acres

Hydraulic length = 245.00 feet

Elevation change = 50.0 feet.

Concentration time = 0.02 hours

Unit hydrograph type = Disturbed

-- Total Area = 0.7 acres

-- Storm data

Total precipitation = 1.5 inches

Storm type = SCS 6 hour design storm

Peak Discharge = 0.18 cfs

Discharge volume = 0.02 acre ft

Project Title = Lila Canyon DA-6a (100/6)

WATERSHED HYDROGRAPH

Inflow into structure # 1

Structure type: Null

-- Watershed data for watershed # 1

Curve number = 83.0

Area = 0.7 acres

Hydraulic length = 245.00 feet

Elevation change = 50.0 feet.

Concentration time = 0.02 hours

Unit hydrograph type = Disturbed

-- Total Area = 0.7 acres

-- Storm data

Total precipitation = 1.9 inches

Storm type = SCS 6 hour design storm

Peak Discharge = 0.30 cfs

Discharge volume = 0.04 acre ft

Project Title = Lila Canyon DA-6a (10/24)

WATERSHED HYDROGRAPH

Inflow into structure # 1

Structure type: Null

-- Watershed data for watershed # 1

Curve number = 83.0

Area = 0.7 acres

Hydraulic length = 245.00 feet

Elevation change = 50.0 feet.

Concentration time = 0.02 hours

Unit hydrograph type = Disturbed

-- Total Area = 0.7 acres

-- Storm data

Total precipitation = 1.9 inches

Storm type = SCS Type 2 storm, 24 hour storm

Peak Discharge = 0.35 cfs

Discharge volume = 0.04 acre ft

Project Title = Lila Canyon DA-6b (10/6)

WATERSHED HYDROGRAPH

Inflow into structure # 1

Structure type: Null

-- Watershed data for watershed # 1

Curve number = 90.0

Area = 3.3 acres

Hydraulic length = 760.00 feet

Elevation change = 70.0 feet.

Concentration time = 0.05 hours

Unit hydrograph type = Disturbed

-- Total Area = 3.3 acres

-- Storm data

Total precipitation = 1.3 inches

Storm type = SCS 6 hour design storm

Peak Discharge = 1.60 cfs

Discharge volume = 0.15 acre ft

Project Title = Lila Canyon DA-6b (25/6)

WATERSHED HYDROGRAPH

Inflow into structure # 1

Structure type: Null

-- Watershed data for watershed # 1

Curve number = 90.0

Area = 3.3 acres

Hydraulic length = 760.00 feet

Elevation change = 70.0 feet.

Concentration time = 0.05 hours

Unit hydrograph type = Disturbed

-- Total Area = 3.3 acres

-- Storm data

Total precipitation = 1.5 inches

Storm type = SCS 6 hour design storm

Peak Discharge = 2.06 cfs

Discharge volume = 0.19 acre ft

Project Title = Lila Canyon DA-6b (100/6)

WATERSHED HYDROGRAPH

Inflow into structure # 1

Structure type: Null

-- Watershed data for watershed # 1

Curve number = 90.0

Area = 3.3 acres

Hydraulic length = 760.00 feet

Elevation change = 70.0 feet.

Concentration time = 0.05 hours

Unit hydrograph type = Disturbed

-- Total Area = 3.3 acres

-- Storm data

Total precipitation = 1.9 inches

Storm type = SCS 6 hour design storm

Peak Discharge = 3.03 cfs

Discharge volume = 0.28 acre ft

Project Title = Lila Canyon DA-6b (10/24)

WATERSHED HYDROGRAPH

Inflow into structure # 1

Structure type: Null

-- Watershed data for watershed # 1

Curve number = 90.0

Area = 3.3 acres

Hydraulic length = 760.00 feet

Elevation change = 70.0 feet.

Concentration time = 0.05 hours

Unit hydrograph type = Disturbed

-- Total Area = 3.3 acres

-- Storm data

Total precipitation = 1.9 inches

Storm type = SCS Type 2 storm, 24 hour storm

Peak Discharge = 3.27 cfs

Discharge volume = 0.28 acre ft

Project Title = Lila Canyon DA-6c (10/6)

WATERSHED HYDROGRAPH

Inflow into structure # 1

Structure type: Null

-- Watershed data for watershed # 1

Curve number = 90.0

Area = 2.5 acres

Hydraulic length = 690.00 feet

Elevation change = 70.0 feet.

Concentration time = 0.05 hours

Unit hydrograph type = Disturbed

-- Total Area = 2.5 acres

-- Storm data

Total precipitation = 1.3 inches

Storm type = SCS 6 hour design storm

Peak Discharge = 1.18 cfs

Discharge volume = 0.11 acre ft

Project Title = Lila Canyon DA-6c (25/6)

WATERSHED HYDROGRAPH

Inflow into structure # 1

Structure type: Null

-- Watershed data for watershed # 1

Curve number = 90.0

Area = 2.5 acres

Hydraulic length = 690.00 feet

Elevation change = 70.0 feet.

Concentration time = 0.05 hours

Unit hydrograph type = Disturbed

-- Total Area = 2.5 acres

-- Storm data

Total precipitation = 1.5 inches

Storm type = SCS 6 hour design storm

Peak Discharge = 1.52 cfs

Discharge volume = 0.14 acre ft

Project Title = Lila Canyon DA-6c (100/6)

WATERSHED HYDROGRAPH

Inflow into structure # 1

Structure type: Null

-- Watershed data for watershed # 1

Curve number = 90.0

Area = 2.5 acres

Hydraulic length = 690.00 feet

Elevation change = 70.0 feet.

Concentration time = 0.05 hours

Unit hydrograph type = Disturbed

-- Total Area = 2.5 acres

-- Storm data

Total precipitation = 1.9 inches

Storm type = SCS 6 hour design storm

Peak Discharge = 2.23 cfs

Discharge volume = 0.21 acre ft

Project Title = Lila Canyon DA-6c (10/24)

WATERSHED HYDROGRAPH

Inflow into structure # 1

Structure type: Null

-- Watershed data for watershed # 1

Curve number = 90.0

Area = 2.5 acres

Hydraulic length = 690.00 feet

Elevation change = 70.0 feet.

Concentration time = 0.05 hours

Unit hydrograph type = Disturbed

-- Total Area = 2.5 acres

-- Storm data

Total precipitation = 1.9 inches

Storm type = SCS Type 2 storm, 24 hour storm

Peak Discharge = 2.40 cfs

Discharge volume = 0.21 acre ft

Project Title = Lila Canyon DA-7 (10/6)

WATERSHED HYDROGRAPH

Inflow into structure # 1

Structure type: Null

-- Watershed data for watershed # 1

Curve number = 95.0

Area = 2.7 acres

Hydraulic length = 630.00 feet

Elevation change = 30.0 feet.

Concentration time = 0.06 hours

Unit hydrograph type = Disturbed

-- Total Area = 2.7 acres

-- Storm data

Total precipitation = 1.3 inches

Storm type = SCS 6 hour design storm

Peak Discharge = 1.98 cfs

Discharge volume = 0.19 acre ft

Project Title = Lila Canyon DA-7 (25/6)

WATERSHED HYDROGRAPH

Inflow into structure # 1

Structure type: Null

-- Watershed data for watershed # 1

Curve number = 95.0

Area = 2.7 acres

Hydraulic length = 630.00 feet

Elevation change = 30.0 feet.

Concentration time = 0.06 hours

Unit hydrograph type = Disturbed

-- Total Area = 2.7 acres

-- Storm data

Total precipitation = 1.5 inches

Storm type = SCS 6 hour design storm

Peak Discharge = 2.39 cfs

Discharge volume = 0.23 acre ft

Project Title = Lila Canyon DA-7 (100/6)

WATERSHED HYDROGRAPH

Inflow into structure # 1

Structure type: Null

-- Watershed data for watershed # 1

Curve number = 95.0

Area = 2.7 acres

Hydraulic length = 630.00 feet

Elevation change = 30.0 feet.

Concentration time = 0.06 hours

Unit hydrograph type = Disturbed

-- Total Area = 2.7 acres

-- Storm data

Total precipitation = 1.9 inches

Storm type = SCS 6 hour design storm

Peak Discharge = 3.22 cfs

Discharge volume = 0.31 acre ft

Project Title = Lila Canyon DA-7 (10/24)

WATERSHED HYDROGRAPH

Inflow into structure # 1

Structure type: Null

-- Watershed data for watershed # 1

Curve number = 95.0

Area = 2.7 acres

Hydraulic length = 630.00 feet

Elevation change = 30.0 feet.

Concentration time = 0.06 hours

Unit hydrograph type = Disturbed

-- Total Area = 2.7 acres

-- Storm data

Total precipitation = 1.9 inches

Storm type = SCS Type 2 storm, 24 hour storm

Peak Discharge = 3.36 cfs

Discharge volume = 0.31 acre ft

Project Title = Lila Canyon DA-8a (10/6)

WATERSHED HYDROGRAPH

Inflow into structure # 1

Structure type: Null

-- Watershed data for watershed # 1

Curve number = 90.0

Area = 0.3 acres

Hydraulic length = 284.00 feet

Elevation change = 54.0 feet.

Concentration time = 0.02 hours

Unit hydrograph type = Disturbed

-- Total Area = 0.3 acres

-- Storm data

Total precipitation = 1.3 inches

Storm type = SCS 6 hour design storm

Peak Discharge = 0.10 cfs

Discharge volume = 0.01 acre ft

Project Title = Lila Canyon DA-8a (25/6)

WATERSHED HYDROGRAPH

Inflow into structure # 1

Structure type: Null

-- Watershed data for watershed # 1

Curve number = 90.0

Area = 0.3 acres

Hydraulic length = 284.00 feet

Elevation change = 54.0 feet.

Concentration time = 0.02 hours

Unit hydrograph type = Disturbed

-- Total Area = 0.3 acres

-- Storm data

Total precipitation = 1.5 inches

Storm type = SCS 6 hour design storm

Peak Discharge = 0.12 cfs

Discharge volume = 0.01 acre ft

Project Title = Lila Canyon DA-8a (100/6)

WATERSHED HYDROGRAPH

Inflow into structure # 1

Structure type: Null

-- Watershed data for watershed # 1

Curve number = 90.0

Area = 0.3 acres

Hydraulic length = 284.00 feet

Elevation change = 54.0 feet.

Concentration time = 0.02 hours

Unit hydrograph type = Disturbed

-- Total Area = 0.3 acres

-- Storm data

Total precipitation = 1.9 inches

Storm type = SCS 6 hour design storm

Peak Discharge = 0.18 cfs

Discharge volume = 0.02 acre ft

Project Title = Lila Canyon DA-8a (10/24)

WATERSHED HYDROGRAPH

Inflow into structure # 1

Structure type: Null

-- Watershed data for watershed # 1

Curve number = 90.0

Area = 0.3 acres

Hydraulic length = 284.00 feet

Elevation change = 54.0 feet.

Concentration time = 0.02 hours

Unit hydrograph type = Disturbed

-- Total Area = 0.3 acres

-- Storm data

Total precipitation = 1.9 inches

Storm type = SCS Type 2 storm, 24 hour storm

Peak Discharge = 0.19 cfs

Discharge volume = 0.02 acre ft

Project Title = Lila Canyon DA-8b (10/6)

WATERSHED HYDROGRAPH

Inflow into structure # 1

Structure type: Null

-- Watershed data for watershed # 1

Curve number = 90.0

Area = 0.8 acres

Hydraulic length = 670.00 feet

Elevation change = 52.0 feet.

Concentration time = 0.05 hours

Unit hydrograph type = Disturbed

-- Total Area = 0.8 acres

-- Storm data

Total precipitation = 1.3 inches

Storm type = SCS 6 hour design storm

Peak Discharge = 0.36 cfs

Discharge volume = 0.03 acre ft

Project Title = Lila Canyon DA-8b (25/6)

WATERSHED HYDROGRAPH

Inflow into structure # 1

Structure type: Null

-- Watershed data for watershed # 1

Curve number = 90.0

Area = 0.8 acres

Hydraulic length = 670.00 feet

Elevation change = 52.0 feet.

Concentration time = 0.05 hours

Unit hydrograph type = Disturbed

-- Total Area = 0.8 acres

-- Storm data

Total precipitation = 1.5 inches

Storm type = SCS 6 hour design storm

Peak Discharge = 0.47 cfs

Discharge volume = 0.04 acre ft

Project Title = Lila Canyon DA-8b (100/6)

WATERSHED HYDROGRAPH

Inflow into structure # 1

Structure type: Null

-- Watershed data for watershed # 1

Curve number = 90.0

Area = 0.8 acres

Hydraulic length = 670.00 feet

Elevation change = 52.0 feet.

Concentration time = 0.05 hours

Unit hydrograph type = Disturbed

-- Total Area = 0.8 acres

-- Storm data

Total precipitation = 1.9 inches

Storm type = SCS 6 hour design storm

Peak Discharge = 0.68 cfs

Discharge volume = 0.06 acre ft

Project Title = Lila Canyon DA-8b (10/24)

WATERSHED HYDROGRAPH

Inflow into structure # 1

Structure type: Null

-- Watershed data for watershed # 1

Curve number = 90.0

Area = 0.8 acres

Hydraulic length = 670.00 feet

Elevation change = 52.0 feet.

Concentration time = 0.05 hours

Unit hydrograph type = Disturbed

-- Total Area = 0.8 acres

-- Storm data

Total precipitation = 1.9 inches

Storm type = SCS Type 2 storm, 24 hour storm

Peak Discharge = 0.74 cfs

Discharge volume = 0.06 acre ft

Project Title = Lila Canyon DA-9 (10/6)

WATERSHED HYDROGRAPH

Inflow into structure # 1

Structure type: Null

-- Watershed data for watershed # 1

Curve number = 93.0

Area = 0.1 acres

Hydraulic length = 100.00 feet

Elevation change = 11.0 feet.

Concentration time = 0.01 hours

Unit hydrograph type = Disturbed

-- Total Area = 0.1 acres

-- Storm data

Total precipitation = 1.3 inches

Storm type = SCS 6 hour design storm

Peak Discharge = 0.04 cfs

Discharge volume = 0.01 acre ft

Project Title = Lila Canyon DA-9 (25/6)

WATERSHED HYDROGRAPH

Inflow into structure # 1

Structure type: Null

-- Watershed data for watershed # 1

Curve number = 93.0

Area = 0.1 acres

Hydraulic length = 100.00 feet

Elevation change = 11.0 feet.

Concentration time = 0.01 hours

Unit hydrograph type = Disturbed

-- Total Area = 0.1 acres

-- Storm data

Total precipitation = 1.5 inches

Storm type = SCS 6 hour design storm

Peak Discharge = 0.05 cfs

Discharge volume = 0.01 acre ft

Project Title = Lila Canyon DA-9 (100/6)

WATERSHED HYDROGRAPH

Inflow into structure # 1

Structure type: Null

-- Watershed data for watershed # 1

Curve number = 93.0

Area = 0.1 acres

Hydraulic length = 100.00 feet

Elevation change = 11.0 feet.

Concentration time = 0.01 hours

Unit hydrograph type = Disturbed

-- Total Area = 0.1 acres

-- Storm data

Total precipitation = 1.9 inches

Storm type = SCS 6 hour design storm

Peak Discharge = 0.07 cfs

Discharge volume = 0.01 acre ft

Project Title = Lila Canyon DA-9 (10/24)

WATERSHED HYDROGRAPH

Inflow into structure # 1

Structure type: Null

-- Watershed data for watershed # 1

Curve number = 93.0

Area = 0.1 acres

Hydraulic length = 100.00 feet

Elevation change = 11.0 feet.

Concentration time = 0.01 hours

Unit hydrograph type = Disturbed

-- Total Area = 0.1 acres

-- Storm data

Total precipitation = 1.9 inches

Storm type = SCS Type 2 storm, 24 hour storm

Peak Discharge = 0.07 cfs

Discharge volume = 0.01 acre ft

Project Title = Lila Canyon DA-10 (10/6)

WATERSHED HYDROGRAPH

Inflow into structure # 1

Structure type: Null

-- Watershed data for watershed # 1

Curve number = 93.0

Area = 2.1 acres

Hydraulic length = 715.00 feet

Elevation change = 20.0 feet.

Concentration time = 0.08 hours

Unit hydrograph type = Disturbed

-- Total Area = 2.1 acres

-- Storm data

Total precipitation = 1.3 inches

Storm type = SCS 6 hour design storm

Peak Discharge = 1.36 cfs

Discharge volume = 0.12 acre ft

Project Title = Lila Canyon DA-10 (25/6)

WATERSHED HYDROGRAPH

Inflow into structure # 1

Structure type: Null

-- Watershed data for watershed # 1

Curve number = 93.0

Area = 2.1 acres

Hydraulic length = 715.00 feet

Elevation change = 20.0 feet.

Concentration time = 0.08 hours

Unit hydrograph type = Disturbed

-- Total Area = 2.1 acres

-- Storm data

Total precipitation = 1.5 inches

Storm type = SCS 6 hour design storm

Peak Discharge = 1.68 cfs

Discharge volume = 0.15 acre ft

Project Title = Lila Canyon DA-10 (100/6)

WATERSHED HYDROGRAPH

Inflow into structure # 1

Structure type: Null

-- Watershed data for watershed # 1

Curve number = 93.0

Area = 2.1 acres

Hydraulic length = 715.00 feet

Elevation change = 20.0 feet.

Concentration time = 0.08 hours

Unit hydrograph type = Disturbed

-- Total Area = 2.1 acres

-- Storm data

Total precipitation = 1.9 inches

Storm type = SCS 6 hour design storm

Peak Discharge = 2.35 cfs

Discharge volume = 0.21 acre ft

Project Title = Lila Canyon DA-10 (10/24)

WATERSHED HYDROGRAPH

Inflow into structure # 1

Structure type: Null

-- Watershed data for watershed # 1

Curve number = 93.0

Area = 2.1 acres

Hydraulic length = 715.00 feet

Elevation change = 20.0 feet.

Concentration time = 0.08 hours

Unit hydrograph type = Disturbed

-- Total Area = 2.1 acres

-- Storm data

Total precipitation = 1.9 inches

Storm type = SCS Type 2 storm, 24 hour storm

Peak Discharge = 2.49 cfs

Discharge volume = 0.21 acre ft

Project Title = Lila Canyon DA-11 (10/6)

WATERSHED HYDROGRAPH

Inflow into structure # 1

Structure type: Null

-- Watershed data for watershed # 1

Curve number = 93.0

Area = 0.8 acres

Hydraulic length = 480.00 feet

Elevation change = 22.0 feet.

Concentration time = 0.05 hours

Unit hydrograph type = Disturbed

-- Total Area = 0.8 acres

-- Storm data

Total precipitation = 1.3 inches

Storm type = SCS 6 hour design storm

Peak Discharge = 0.50 cfs

Discharge volume = 0.05 acre ft

Project Title = Lila Canyon DA-11 (25/6)

WATERSHED HYDROGRAPH

Inflow into structure # 1

Structure type: Null

-- Watershed data for watershed # 1

Curve number = 93.0

Area = 0.8 acres

Hydraulic length = 480.00 feet

Elevation change = 22.0 feet.

Concentration time = 0.05 hours

Unit hydrograph type = Disturbed

-- Total Area = 0.8 acres

-- Storm data

Total precipitation = 1.5 inches

Storm type = SCS 6 hour design storm

Peak Discharge = 0.62 cfs

Discharge volume = 0.06 acre ft

Project Title = Lila Canyon DA-11 (100/6)

WATERSHED HYDROGRAPH

Inflow into structure # 1

Structure type: Null

-- Watershed data for watershed # 1

Curve number = 93.0

Area = 0.8 acres

Hydraulic length = 480.00 feet

Elevation change = 22.0 feet.

Concentration time = 0.05 hours

Unit hydrograph type = Disturbed

-- Total Area = 0.8 acres

-- Storm data

Total precipitation = 1.9 inches

Storm type = SCS 6 hour design storm

Peak Discharge = 0.87 cfs

Discharge volume = 0.08 acre ft

Project Title = Lila Canyon DA-11 (10/24)

WATERSHED HYDROGRAPH

Inflow into structure # 1

Structure type: Null

-- Watershed data for watershed # 1

Curve number = 93.0

Area = 0.8 acres

Hydraulic length = 480.00 feet

Elevation change = 22.0 feet.

Concentration time = 0.05 hours

Unit hydrograph type = Disturbed

-- Total Area = 0.8 acres

-- Storm data

Total precipitation = 1.9 inches

Storm type = SCS Type 2 storm, 24 hour storm

Peak Discharge = 0.92 cfs

Discharge volume = 0.08 acre ft

Project Title = Lila Canyon DA-13a (10/6)

WATERSHED HYDROGRAPH

Inflow into structure # 1

Structure type: Null

-- Watershed data for watershed # 1

Curve number = 93.0

Area = 1.9 acres

Hydraulic length = 770.00 feet

Elevation change = 24.0 feet.

Concentration time = 0.08 hours

Unit hydrograph type = Disturbed

-- Total Area = 1.9 acres

-- Storm data

Total precipitation = 1.3 inches

Storm type = SCS 6 hour design storm

Peak Discharge = 1.26 cfs

Discharge volume = 0.11 acre ft

Project Title = Lila Canyon DA-13a (25/6)

WATERSHED HYDROGRAPH

Inflow into structure # 1

Structure type: Null

-- Watershed data for watershed # 1

Curve number = 93.0

Area = 1.9 acres

Hydraulic length = 770.00 feet

Elevation change = 24.0 feet.

Concentration time = 0.08 hours

Unit hydrograph type = Disturbed

-- Total Area = 1.9 acres

-- Storm data

Total precipitation = 1.5 inches

Storm type = SCS 6 hour design storm

Peak Discharge = 1.56 cfs

Discharge volume = 0.14 acre ft

Project Title = Lila Canyon DA-13a (100/6)

WATERSHED HYDROGRAPH

Inflow into structure # 1

Structure type: Null

-- Watershed data for watershed # 1

Curve number = 93.0

Area = 1.9 acres

Hydraulic length = 770.00 feet

Elevation change = 24.0 feet.

Concentration time = 0.08 hours

Unit hydrograph type = Disturbed

-- Total Area = 1.9 acres

-- Storm data

Total precipitation = 1.9 inches

Storm type = SCS 6 hour design storm

Peak Discharge = 2.17 cfs

Discharge volume = 0.20 acre ft

Project Title = Lila Canyon DA-13a (10/24)

WATERSHED HYDROGRAPH

Inflow into structure # 1

Structure type: Null

-- Watershed data for watershed # 1

Curve number = 93.0

Area = 1.9 acres

Hydraulic length = 770.00 feet

Elevation change = 24.0 feet.

Concentration time = 0.08 hours

Unit hydrograph type = Disturbed

-- Total Area = 1.9 acres

-- Storm data

Total precipitation = 1.9 inches

Storm type = SCS Type 2 storm, 24 hour storm

Peak Discharge = 2.30 cfs

Discharge volume = 0.20 acre ft

Project Title = Lila Canyon DA-13b (10/6)

WATERSHED HYDROGRAPH

Inflow into structure # 1

Structure type: Null

-- Watershed data for watershed # 1

Curve number = 83.0

Area = 1.4 acres

Hydraulic length = 450.00 feet

Elevation change = 75.0 feet.

Concentration time = 0.03 hours

Unit hydrograph type = Disturbed

-- Total Area = 1.4 acres

-- Storm data

Total precipitation = 1.3 inches

Storm type = SCS 6 hour design storm

Peak Discharge = 0.26 cfs

Discharge volume = 0.03 acre ft

Project Title = Lila Canyon DA-13b (25/6)

WATERSHED HYDROGRAPH

Inflow into structure # 1

Structure type: Null

-- Watershed data for watershed # 1

Curve number = 83.0

Area = 1.4 acres

Hydraulic length = 450.00 feet

Elevation change = 75.0 feet.

Concentration time = 0.03 hours

Unit hydrograph type = Disturbed

-- Total Area = 1.4 acres

-- Storm data

Total precipitation = 1.5 inches

Storm type = SCS 6 hour design storm

Peak Discharge = 0.38 cfs

Discharge volume = 0.04 acre ft

Project Title = Lila Canyon DA-13b (100/6)

WATERSHED HYDROGRAPH

Inflow into structure # 1

Structure type: Null

-- Watershed data for watershed # 1

Curve number = 83.0

Area = 1.4 acres

Hydraulic length = 450.00 feet

Elevation change = 75.0 feet.

Concentration time = 0.03 hours

Unit hydrograph type = Disturbed

-- Total Area = 1.4 acres

-- Storm data

Total precipitation = 1.9 inches

Storm type = SCS 6 hour design storm

Peak Discharge = 0.65 cfs

Discharge volume = 0.07 acre ft

Project Title = Lila Canyon DA-13b (10/24)

WATERSHED HYDROGRAPH

Inflow into structure # 1

Structure type: Null

-- Watershed data for watershed # 1

Curve number = 83.0

Area = 1.4 acres

Hydraulic length = 450.00 feet

Elevation change = 75.0 feet.

Concentration time = 0.03 hours

Unit hydrograph type = Disturbed

-- Total Area = 1.4 acres

-- Storm data

Total precipitation = 1.9 inches

Storm type = SCS Type 2 storm, 24 hour storm

Peak Discharge = 0.75 cfs

Discharge volume = 0.07 acre ft

Project Title = Lila Canyon DA-13c (10/6)

WATERSHED HYDROGRAPH

Inflow into structure # 1

Structure type: Null

-- Watershed data for watershed # 1

Curve number = 90.0

Area = 0.5 acres

Hydraulic length = 375.00 feet

Elevation change = 40.0 feet.

Concentration time = 0.03 hours

Unit hydrograph type = Disturbed

-- Total Area = 0.5 acres

-- Storm data

Total precipitation = 1.3 inches

Storm type = SCS 6 hour design storm

Peak Discharge = 0.20 cfs

Discharge volume = 0.02 acre ft

Project Title = Lila Canyon DA-13c (25/6)

WATERSHED HYDROGRAPH

Inflow into structure # 1

Structure type: Null

-- Watershed data for watershed # 1

Curve number = 90.0

Area = 0.5 acres

Hydraulic length = 375.00 feet

Elevation change = 40.0 feet.

Concentration time = 0.03 hours

Unit hydrograph type = Disturbed

-- Total Area = 0.5 acres

-- Storm data

Total precipitation = 1.5 inches

Storm type = SCS 6 hour design storm

Peak Discharge = 0.26 cfs

Discharge volume = 0.03 acre ft

Project Title = Lila Canyon DA-13c (100/6)

WATERSHED HYDROGRAPH

Inflow into structure # 1

Structure type: Null

-- Watershed data for watershed # 1

Curve number = 90.0

Area = 0.5 acres

Hydraulic length = 375.00 feet

Elevation change = 40.0 feet.

Concentration time = 0.03 hours

Unit hydrograph type = Disturbed

-- Total Area = 0.5 acres

-- Storm data

Total precipitation = 1.9 inches

Storm type = SCS 6 hour design storm

Peak Discharge = 0.38 cfs

Discharge volume = 0.04 acre ft

Project Title = Lila Canyon DA-13d (10/24)

WATERSHED HYDROGRAPH

Inflow into structure # 1

Structure type: Null

-- Watershed data for watershed # 1

Curve number = 90.0

Area = 0.5 acres

Hydraulic length = 375.00 feet

Elevation change = 40.0 feet.

Concentration time = 0.03 hours

Unit hydrograph type = Disturbed

-- Total Area = 0.5 acres

-- Storm data

Total precipitation = 1.9 inches

Storm type = SCS Type 2 storm, 24 hour storm

Peak Discharge = 0.41 cfs

Discharge volume = 0.04 acre ft

Project Title = Lila Canyon DA-13d (10/6)

WATERSHED HYDROGRAPH

Inflow into structure # 1

Structure type: Null

-- Watershed data for watershed # 1

Curve number = 90.0

Area = 0.4 acres

Hydraulic length = 460.00 feet

Elevation change = 22.0 feet.

Concentration time = 0.05 hours

Unit hydrograph type = Disturbed

-- Total Area = 0.4 acres

-- Storm data

Total precipitation = 1.3 inches

Storm type = SCS 6 hour design storm

Peak Discharge = 0.19 cfs

Discharge volume = 0.02 acre ft

Project Title = Lila Canyon DA-13d (25/6)

WATERSHED HYDROGRAPH

Inflow into structure # 1

Structure type: Null

-- Watershed data for watershed # 1

Curve number = 90.0

Area = 0.4 acres

Hydraulic length = 460.00 feet

Elevation change = 22.0 feet.

Concentration time = 0.05 hours

Unit hydrograph type = Disturbed

-- Total Area = 0.4 acres

-- Storm data

Total precipitation = 1.5 inches

Storm type = SCS 6 hour design storm

Peak Discharge = 0.24 cfs

Discharge volume = 0.02 acre ft

Project Title = Lila Canyon DA-13d (100/6)

WATERSHED HYDROGRAPH

Inflow into structure # 1

Structure type: Null

-- Watershed data for watershed # 1

Curve number = 90.0

Area = 0.4 acres

Hydraulic length = 460.00 feet

Elevation change = 22.0 feet.

Concentration time = 0.05 hours

Unit hydrograph type = Disturbed

-- Total Area = 0.4 acres

-- Storm data

Total precipitation = 1.9 inches

Storm type = SCS 6 hour design storm

Peak Discharge = 0.35 cfs

Discharge volume = 0.03 acre ft

Project Title = Lila Canyon DA-13d (10/24)

WATERSHED HYDROGRAPH

Inflow into structure # 1

Structure type: Null

-- Watershed data for watershed # 1

Curve number = 90.0

Area = 0.4 acres

Hydraulic length = 460.00 feet

Elevation change = 22.0 feet.

Concentration time = 0.05 hours

Unit hydrograph type = Disturbed

-- Total Area = 0.4 acres

-- Storm data

Total precipitation = 1.9 inches

Storm type = SCS Type 2 storm, 24 hour storm

Peak Discharge = 0.38 cfs

Discharge volume = 0.03 acre ft

Project Title = Lila Canyon DA-14a (10/6)

WATERSHED HYDROGRAPH

Inflow into structure # 1

Structure type: Null

-- Watershed data for watershed # 1

Curve number = 95.0

Area = 0.4 acres

Hydraulic length = 390.00 feet

Elevation change = 34.0 feet.

Concentration time = 0.03 hours

Unit hydrograph type = Disturbed

-- Total Area = 0.4 acres

-- Storm data

Total precipitation = 1.3 inches

Storm type = SCS 6 hour design storm

Peak Discharge = 0.23 cfs

Discharge volume = 0.02 acre ft

Project Title = Lila Canyon DA-14a (25/6)

WATERSHED HYDROGRAPH

Inflow into structure # 1

Structure type: Null

-- Watershed data for watershed # 1

Curve number = 95.0

Area = 0.4 acres

Hydraulic length = 390.00 feet

Elevation change = 34.0 feet.

Concentration time = 0.03 hours

Unit hydrograph type = Disturbed

-- Total Area = 0.4 acres

-- Storm data

Total precipitation = 1.5 inches

Storm type = SCS 6 hour design storm

Peak Discharge = 0.28 cfs

Discharge volume = 0.03 acre ft

Project Title = Lila Canyon DA-14a (100/6)

WATERSHED HYDROGRAPH

Inflow into structure # 1

Structure type: Null

-- Watershed data for watershed # 1

Curve number = 95.0

Area = 0.4 acres

Hydraulic length = 390.00 feet

Elevation change = 34.0 feet.

Concentration time = 0.03 hours

Unit hydrograph type = Disturbed

-- Total Area = 0.4 acres

-- Storm data

Total precipitation = 1.9 inches

Storm type = SCS 6 hour design storm

Peak Discharge = 0.38 cfs

Discharge volume = 0.04 acre ft

Project Title = Lila Canyon DA-14a (10/24)

WATERSHED HYDROGRAPH

Inflow into structure # 1

Structure type: Null

-- Watershed data for watershed # 1

Curve number = 95.0

Area = 0.4 acres

Hydraulic length = 390.00 feet

Elevation change = 34.0 feet.

Concentration time = 0.03 hours

Unit hydrograph type = Disturbed

-- Total Area = 0.4 acres

-- Storm data

Total precipitation = 1.9 inches

Storm type = SCS Type 2 storm, 24 hour storm

Peak Discharge = 0.39 cfs

Discharge volume = 0.04 acre ft

Project Title = Lila Canyon DA-14b (10/6)

WATERSHED HYDROGRAPH

Inflow into structure # 1

Structure type: Null

-- Watershed data for watershed # 1

Curve number = 95.0

Area = 0.8 acres

Hydraulic length = 540.00 feet

Elevation change = 16.0 feet.

Concentration time = 0.06 hours

Unit hydrograph type = Disturbed

-- Total Area = 0.8 acres

-- Storm data

Total precipitation = 1.3 inches

Storm type = SCS 6 hour design storm

Peak Discharge = 0.56 cfs

Discharge volume = 0.05 acre ft

Project Title = Lila Canyon DA-14b (25/6)

WATERSHED HYDROGRAPH

Inflow into structure # 1

Structure type: Null

-- Watershed data for watershed # 1

Curve number = 95.0

Area = 0.8 acres

Hydraulic length = 540.00 feet

Elevation change = 16.0 feet.

Concentration time = 0.06 hours

Unit hydrograph type = Disturbed

-- Total Area = 0.8 acres

-- Storm data

Total precipitation = 1.5 inches

Storm type = SCS 6 hour design storm

Peak Discharge = 0.67 cfs

Discharge volume = 0.06 acre ft

Project Title = Lila Canyon DA-14b (100/6)

WATERSHED HYDROGRAPH

Inflow into structure # 1

Structure type: Null

-- Watershed data for watershed # 1

Curve number = 95.0

Area = 0.8 acres

Hydraulic length = 540.00 feet

Elevation change = 16.0 feet.

Concentration time = 0.06 hours

Unit hydrograph type = Disturbed

-- Total Area = 0.8 acres

-- Storm data

Total precipitation = 1.9 inches

Storm type = SCS 6 hour design storm

Peak Discharge = 0.91 cfs

Discharge volume = 0.09 acre ft

Project Title = Lila Canyon DA-14b (10/24)

WATERSHED HYDROGRAPH

Inflow into structure # 1

Structure type: Null

-- Watershed data for watershed # 1

Curve number = 95.0

Area = 0.8 acres

Hydraulic length = 540.00 feet

Elevation change = 16.0 feet.

Concentration time = 0.06 hours

Unit hydrograph type = Disturbed

-- Total Area = 0.8 acres

-- Storm data

Total precipitation = 1.9 inches

Storm type = SCS Type 2 storm, 24 hour storm

Peak Discharge = 0.95 cfs

Discharge volume = 0.09 acre ft

Project Title = Lila Canyon DA-15 (10/6)

WATERSHED HYDROGRAPH

Inflow into structure # 1

Structure type: Null

-- Watershed data for watershed # 1

Curve number = 95.0

Area = 1.0 acres

Hydraulic length = 810.00 feet

Elevation change = 58.0 feet.

Concentration time = 0.06 hours

Unit hydrograph type = Disturbed

-- Total Area = 1.0 acres

-- Storm data

Total precipitation = 1.3 inches

Storm type = SCS 6 hour design storm

Peak Discharge = 0.76 cfs

Discharge volume = 0.07 acre ft

Project Title = Lila Canyon DA-15 (25/6)

WATERSHED HYDROGRAPH

Inflow into structure # 1

Structure type: Null

-- Watershed data for watershed # 1

Curve number = 95.0

Area = 1.0 acres

Hydraulic length = 810.00 feet

Elevation change = 58.0 feet.

Concentration time = 0.06 hours

Unit hydrograph type = Disturbed

-- Total Area = 1.0 acres

-- Storm data

Total precipitation = 1.5 inches

Storm type = SCS 6 hour design storm

Peak Discharge = 0.91 cfs

Discharge volume = 0.09 acre ft

Project Title = Lila Canyon DA-15 (100/6)

WATERSHED HYDROGRAPH

Inflow into structure # 1

Structure type: Null

-- Watershed data for watershed # 1

Curve number = 95.0

Area = 1.0 acres

Hydraulic length = 810.00 feet

Elevation change = 58.0 feet.

Concentration time = 0.06 hours

Unit hydrograph type = Disturbed

-- Total Area = 1.0 acres

-- Storm data

Total precipitation = 1.9 inches

Storm type = SCS 6 hour design storm

Peak Discharge = 1.23 cfs

Discharge volume = 0.12 acre ft

Project Title = Lila Canyon DA-15 (10/24)

WATERSHED HYDROGRAPH

Inflow into structure # 1

Structure type: Null

-- Watershed data for watershed # 1

Curve number = 95.0

Area = 1.0 acres

Hydraulic length = 810.00 feet

Elevation change = 58.0 feet.

Concentration time = 0.06 hours

Unit hydrograph type = Disturbed

-- Total Area = 1.0 acres

-- Storm data

Total precipitation = 1.9 inches

Storm type = SCS Type 2 storm, 24 hour storm

Peak Discharge = 1.28 cfs

Discharge volume = 0.12 acre ft

Project Title = Lila Canyon DA-16a (10/6)

WATERSHED HYDROGRAPH

Inflow into structure # 1

Structure type: Null

-- Watershed data for watershed # 1

Curve number = 95.0

Area = 0.2 acres

Hydraulic length = 370.00 feet

Elevation change = 10.0 feet.

Concentration time = 0.05 hours

Unit hydrograph type = Disturbed

-- Total Area = 0.2 acres

-- Storm data

Total precipitation = 1.3 inches

Storm type = SCS 6 hour design storm

Peak Discharge = 0.11 cfs

Discharge volume = 0.01 acre ft

Project Title = Lila Canyon DA-16a (25/6)

WATERSHED HYDROGRAPH

Inflow into structure # 1

Structure type: Null

-- Watershed data for watershed # 1

Curve number = 95.0

Area = 0.2 acres

Hydraulic length = 370.00 feet

Elevation change = 10.0 feet.

Concentration time = 0.05 hours

Unit hydrograph type = Disturbed

-- Total Area = 0.2 acres

-- Storm data

Total precipitation = 1.5 inches

Storm type = SCS 6 hour design storm

Peak Discharge = 0.14 cfs

Discharge volume = 0.01 acre ft

Project Title = Lila Canyon DA-16a (100/6)

WATERSHED HYDROGRAPH

Inflow into structure # 1

Structure type: Null

-- Watershed data for watershed # 1

Curve number = 95.0

Area = 0.2 acres

Hydraulic length = 370.00 feet

Elevation change = 10.0 feet.

Concentration time = 0.05 hours

Unit hydrograph type = Disturbed

-- Total Area = 0.2 acres

-- Storm data

Total precipitation = 1.9 inches

Storm type = SCS 6 hour design storm

Peak Discharge = 0.19 cfs

Discharge volume = 0.02 acre ft

Project Title = Lila Canyon DA-16a (10/24)

WATERSHED HYDROGRAPH

Inflow into structure # 1

Structure type: Null

-- Watershed data for watershed # 1

Curve number = 95.0

Area = 0.2 acres

Hydraulic length = 370.00 feet

Elevation change = 10.0 feet.

Concentration time = 0.05 hours

Unit hydrograph type = Disturbed

-- Total Area = 0.2 acres

-- Storm data

Total precipitation = 1.9 inches

Storm type = SCS Type 2 storm, 24 hour storm

Peak Discharge = 0.19 cfs

Discharge volume = 0.02 acre ft

Project Title = Lila Canyon DA-16b (10/6)

WATERSHED HYDROGRAPH

Inflow into structure # 1

Structure type: Null

-- Watershed data for watershed # 1

Curve number = 95.0

Area = 0.1 acres

Hydraulic length = 210.00 feet

Elevation change = 13.0 feet.

Concentration time = 0.02 hours

Unit hydrograph type = Disturbed

-- Total Area = 0.1 acres

-- Storm data

Total precipitation = 1.3 inches

Storm type = SCS 6 hour design storm

Peak Discharge = 0.06 cfs

Discharge volume = 0.01 acre ft

Project Title = Lila Canyon DA-16b (25/6)

WATERSHED HYDROGRAPH

Inflow into structure # 1

Structure type: Null

-- Watershed data for watershed # 1

Curve number = 95.0

Area = 0.1 acres

Hydraulic length = 210.00 feet

Elevation change = 13.0 feet.

Concentration time = 0.02 hours

Unit hydrograph type = Disturbed

-- Total Area = 0.1 acres

-- Storm data

Total precipitation = 1.5 inches

Storm type = SCS 6 hour design storm

Peak Discharge = 0.07 cfs

Discharge volume = 0.01 acre ft

Project Title = Lila Canyon DA-16b (100/6)

WATERSHED HYDROGRAPH

Inflow into structure # 1

Structure type: Null

-- Watershed data for watershed # 1

Curve number = 95.0

Area = 0.1 acres

Hydraulic length = 210.00 feet

Elevation change = 13.0 feet.

Concentration time = 0.02 hours

Unit hydrograph type = Disturbed

-- Total Area = 0.1 acres

-- Storm data

Total precipitation = 1.9 inches

Storm type = SCS 6 hour design storm

Peak Discharge = 0.10 cfs

Discharge volume = 0.01 acre ft

Project Title = Lila Canyon DA-16b (10/24)

WATERSHED HYDROGRAPH

Inflow into structure # 1

Structure type: Null

-- Watershed data for watershed # 1

Curve number = 95.0

Area = 0.1 acres

Hydraulic length = 210.00 feet

Elevation change = 13.0 feet.

Concentration time = 0.02 hours

Unit hydrograph type = Disturbed

-- Total Area = 0.1 acres

-- Storm data

Total precipitation = 1.9 inches

Storm type = SCS Type 2 storm, 24 hour storm

Peak Discharge = 0.10 cfs

Discharge volume = 0.01 acre ft

Project Title = Lila Canyon DA-17a (10/6)

WATERSHED HYDROGRAPH

Inflow into structure # 1

Structure type: Null

-- Watershed data for watershed # 1

Curve number = 95.0

Area = 0.4 acres

Hydraulic length = 610.00 feet

Elevation change = 19.0 feet.

Concentration time = 0.07 hours

Unit hydrograph type = Disturbed

-- Total Area = 0.4 acres

-- Storm data

Total precipitation = 1.3 inches

Storm type = SCS 6 hour design storm

Peak Discharge = 0.31 cfs

Discharge volume = 0.03 acre ft

Project Title = Lila Canyon DA-17a (25/6)

WATERSHED HYDROGRAPH

Inflow into structure # 1

Structure type: Null

-- Watershed data for watershed # 1

Curve number = 95.0

Area = 0.4 acres

Hydraulic length = 610.00 feet

Elevation change = 19.0 feet.

Concentration time = 0.07 hours

Unit hydrograph type = Disturbed

-- Total Area = 0.4 acres

-- Storm data

Total precipitation = 1.5 inches

Storm type = SCS 6 hour design storm

Peak Discharge = 0.38 cfs

Discharge volume = 0.04 acre ft

Project Title = Lila Canyon DA-17a (100/6)

WATERSHED HYDROGRAPH

Inflow into structure # 1

Structure type: Null

-- Watershed data for watershed # 1

Curve number = 95.0

Area = 0.4 acres

Hydraulic length = 610.00 feet

Elevation change = 19.0 feet.

Concentration time = 0.07 hours

Unit hydrograph type = Disturbed

-- Total Area = 0.4 acres

-- Storm data

Total precipitation = 1.9 inches

Storm type = SCS 6 hour design storm

Peak Discharge = 0.51 cfs

Discharge volume = 0.05 acre ft

Project Title = Lila Canyon DA-17a (10/24)

WATERSHED HYDROGRAPH

Inflow into structure # 1

Structure type: Null

-- Watershed data for watershed # 1

Curve number = 95.0

Area = 0.4 acres

Hydraulic length = 610.00 feet

Elevation change = 19.0 feet.

Concentration time = 0.07 hours

Unit hydrograph type = Disturbed

-- Total Area = 0.4 acres

-- Storm data

Total precipitation = 1.9 inches

Storm type = SCS Type 2 storm, 24 hour storm

Peak Discharge = 0.53 cfs

Discharge volume = 0.05 acre ft

Project Title = Lila Canyon DA-17b (10/6)

WATERSHED HYDROGRAPH

Inflow into structure # 1

Structure type: Null

-- Watershed data for watershed # 1

Curve number = 95.0

Area = 0.1 acres

Hydraulic length = 100.00 feet

Elevation change = 5.0 feet.

Concentration time = 0.01 hours

Unit hydrograph type = Disturbed

-- Total Area = 0.1 acres

-- Storm data

Total precipitation = 1.3 inches

Storm type = SCS 6 hour design storm

Peak Discharge = 0.05 cfs

Discharge volume = 0.01 acre ft

Project Title = Lila Canyon DA-17b (25/6)

WATERSHED HYDROGRAPH

Inflow into structure # 1

Structure type: Null

-- Watershed data for watershed # 1

Curve number = 95.0

Area = 0.1 acres

Hydraulic length = 100.00 feet

Elevation change = 5.0 feet.

Concentration time = 0.01 hours

Unit hydrograph type = Disturbed

-- Total Area = 0.1 acres

-- Storm data

Total precipitation = 1.5 inches

Storm type = SCS 6 hour design storm

Peak Discharge = 0.06 cfs

Discharge volume = 0.01 acre ft

Project Title = Lila Canyon DA-17b (100/6)

WATERSHED HYDROGRAPH

Inflow into structure # 1

Structure type: Null

-- Watershed data for watershed # 1

Curve number = 95.0

Area = 0.1 acres

Hydraulic length = 100.00 feet

Elevation change = 5.0 feet.

Concentration time = 0.01 hours

Unit hydrograph type = Disturbed

-- Total Area = 0.1 acres

-- Storm data

Total precipitation = 1.9 inches

Storm type = SCS 6 hour design storm

Peak Discharge = 0.08 cfs

Discharge volume = 0.01 acre ft

Project Title = Lila Canyon DA-17b (10/24)

WATERSHED HYDROGRAPH

Inflow into structure # 1

Structure type: Null

-- Watershed data for watershed # 1

Curve number = 95.0

Area = 0.1 acres

Hydraulic length = 100.00 feet

Elevation change = 5.0 feet.

Concentration time = 0.01 hours

Unit hydrograph type = Disturbed

-- Total Area = 0.1 acres

-- Storm data

Total precipitation = 1.9 inches

Storm type = SCS Type 2 storm, 24 hour storm

Peak Discharge = 0.09 cfs

Discharge volume = 0.01 acre ft

Project Title = Lila Canyon DA-18a (10/6)

WATERSHED HYDROGRAPH

Inflow into structure # 1

Structure type: Null

-- Watershed data for watershed # 1

Curve number = 95.0

Area = 0.1 acres

Hydraulic length = 175.00 feet

Elevation change = 6.0 feet.

Concentration time = 0.03 hours

Unit hydrograph type = Disturbed

-- Total Area = 0.1 acres

-- Storm data

Total precipitation = 1.3 inches

Storm type = SCS 6 hour design storm

Peak Discharge = 0.06 cfs

Discharge volume = 0.01 acre ft

Project Title = Lila Canyon DA-18a (25/6)

WATERSHED HYDROGRAPH

Inflow into structure # 1

Structure type: Null

-- Watershed data for watershed # 1

Curve number = 95.0

Area = 0.1 acres

Hydraulic length = 175.00 feet

Elevation change = 6.0 feet.

Concentration time = 0.03 hours

Unit hydrograph type = Disturbed

-- Total Area = 0.1 acres

-- Storm data

Total precipitation = 1.5 inches

Storm type = SCS 6 hour design storm

Peak Discharge = 0.07 cfs

Discharge volume = 0.01 acre ft

Project Title = Lila Canyon DA-18a (100/6)

WATERSHED HYDROGRAPH

Inflow into structure # 1

Structure type: Null

-- Watershed data for watershed # 1

Curve number = 95.0

Area = 0.1 acres

Hydraulic length = 175.00 feet

Elevation change = 6.0 feet.

Concentration time = 0.03 hours

Unit hydrograph type = Disturbed

-- Total Area = 0.1 acres

-- Storm data

Total precipitation = 1.9 inches

Storm type = SCS 6 hour design storm

Peak Discharge = 0.10 cfs

Discharge volume = 0.01 acre ft

Project Title = Lila Canyon DA-18a (10/24)

WATERSHED HYDROGRAPH

Inflow into structure # 1

Structure type: Null

-- Watershed data for watershed # 1

Curve number = 95.0

Area = 0.1 acres

Hydraulic length = 175.00 feet

Elevation change = 6.0 feet.

Concentration time = 0.03 hours

Unit hydrograph type = Disturbed

-- Total Area = 0.1 acres

-- Storm data

Total precipitation = 1.9 inches

Storm type = SCS Type 2 storm, 24 hour storm

Peak Discharge = 0.10 cfs

Discharge volume = 0.01 acre ft

Project Title = Lila Canyon DA-18b (10/6)

WATERSHED HYDROGRAPH

Inflow into structure # 1

Structure type: Null

-- Watershed data for watershed # 1

Curve number = 95.0

Area = 0.4 acres

Hydraulic length = 650.00 feet

Elevation change = 24.0 feet.

Concentration time = 0.07 hours

Unit hydrograph type = Disturbed

-- Total Area = 0.4 acres

-- Storm data

Total precipitation = 1.3 inches

Storm type = SCS 6 hour design storm

Peak Discharge = 0.33 cfs

Discharge volume = 0.03 acre ft

Project Title = Lila Canyon DA-18b (25/6)

WATERSHED HYDROGRAPH

Inflow into structure # 1

Structure type: Null

-- Watershed data for watershed # 1

Curve number = 95.0

Area = 0.4 acres

Hydraulic length = 650.00 feet

Elevation change = 24.0 feet.

Concentration time = 0.07 hours

Unit hydrograph type = Disturbed

-- Total Area = 0.4 acres

-- Storm data

Total precipitation = 1.5 inches

Storm type = SCS 6 hour design storm

Peak Discharge = 0.40 cfs

Discharge volume = 0.04 acre ft

Project Title = Lila Canyon DA-18b (100/6)

WATERSHED HYDROGRAPH

Inflow into structure # 1

Structure type: Null

-- Watershed data for watershed # 1

Curve number = 95.0

Area = 0.4 acres

Hydraulic length = 650.00 feet

Elevation change = 24.0 feet.

Concentration time = 0.07 hours

Unit hydrograph type = Disturbed

-- Total Area = 0.4 acres

-- Storm data

Total precipitation = 1.9 inches

Storm type = SCS 6 hour design storm

Peak Discharge = 0.53 cfs

Discharge volume = 0.05 acre ft

Project Title = Lila Canyon DA-18b (10/24)

WATERSHED HYDROGRAPH

Inflow into structure # 1

Structure type: Null

-- Watershed data for watershed # 1

Curve number = 95.0

Area = 0.4 acres

Hydraulic length = 650.00 feet

Elevation change = 24.0 feet.

Concentration time = 0.07 hours

Unit hydrograph type = Disturbed

-- Total Area = 0.4 acres

-- Storm data

Total precipitation = 1.9 inches

Storm type = SCS Type 2 storm, 24 hour storm

Peak Discharge = 0.56 cfs

Discharge volume = 0.05 acre ft

Project Title = Lila Canyon TS-1 (10/6)

WATERSHED HYDROGRAPH

Inflow into structure # 1

Structure type: Null

-- Watershed data for watershed # 1

Curve number = 83.0

Area = 3.0 acres

Hydraulic length = 660.00 feet

Elevation change = 38.0 feet.

Concentration time = 0.06 hours

Unit hydrograph type = Disturbed

-- Total Area = 3.0 acres

-- Storm data

Total precipitation = 1.3 inches

Storm type = SCS 6 hour design storm

Peak Discharge = 0.65 cfs

Discharge volume = 0.07 acre ft

Project Title = Lila Canyon TS-1 (25/6)

WATERSHED HYDROGRAPH

Inflow into structure # 1

Structure type: Null

-- Watershed data for watershed # 1

Curve number = 83.0

Area = 3.0 acres

Hydraulic length = 660.00 feet

Elevation change = 38.0 feet.

Concentration time = 0.06 hours

Unit hydrograph type = Disturbed

-- Total Area = 3.0 acres

-- Storm data

Total precipitation = 1.5 inches

Storm type = SCS 6 hour design storm

Peak Discharge = 0.96 cfs

Discharge volume = 0.09 acre ft

Project Title = Lila Canyon TS-1 (100/6)

WATERSHED HYDROGRAPH

Inflow into structure # 1

Structure type: Null

-- Watershed data for watershed # 1

Curve number = 83.0

Area = 3.0 acres

Hydraulic length = 660.00 feet

Elevation change = 38.0 feet.

Concentration time = 0.06 hours

Unit hydrograph type = Disturbed

-- Total Area = 3.0 acres

-- Storm data

Total precipitation = 1.9 inches

Storm type = SCS 6 hour design storm

Peak Discharge = 1.66 cfs

Discharge volume = 0.15 acre ft

Project Title = Lila Canyon TS-1 (10/24)

WATERSHED HYDROGRAPH

Inflow into structure # 1

Structure type: Null

-- Watershed data for watershed # 1

Curve number = 83.0

Area = 3.0 acres

Hydraulic length = 660.00 feet

Elevation change = 38.0 feet.

Concentration time = 0.06 hours

Unit hydrograph type = Disturbed

-- Total Area = 3.0 acres

-- Storm data

Total precipitation = 1.9 inches

Storm type = SCS Type 2 storm, 24 hour storm

Peak Discharge = 1.90 cfs

Discharge volume = 0.15 acre ft

Project Title = Lila Canyon Pond 1 (10/6)

WATERSHED HYDROGRAPH

Inflow into structure # 1

Structure type: Null

-- Watershed data for watershed # 1

Curve number = 95.0

Area = 1.9 acres

Hydraulic length = 380.00 feet

Elevation change = 50.0 feet.

Concentration time = 0.03 hours

Unit hydrograph type = Disturbed

-- Total Area = 1.9 acres

-- Storm data

Total precipitation = 1.3 inches

Storm type = SCS 6 hour design storm

Peak Discharge = 1.18 cfs

Discharge volume = 0.13 acre ft

Project Title = Lila Canyon Pond 1 (25/6)

WATERSHED HYDROGRAPH

Inflow into structure # 1

Structure type: Null

-- Watershed data for watershed # 1

Curve number = 95.0

Area = 1.9 acres

Hydraulic length = 380.00 feet

Elevation change = 50.0 feet.

Concentration time = 0.03 hours

Unit hydrograph type = Disturbed

-- Total Area = 1.9 acres

-- Storm data

Total precipitation = 1.5 inches

Storm type = SCS 6 hour design storm

Peak Discharge = 1.42 cfs

Discharge volume = 0.16 acre ft

Project Title = Lila Canyon Pond 1 (100/6)

WATERSHED HYDROGRAPH

Inflow into structure # 1

Structure type: Null

-- Watershed data for watershed # 1

Curve number = 95.0

Area = 1.9 acres

Hydraulic length = 380.00 feet

Elevation change = 50.0 feet.

Concentration time = 0.03 hours

Unit hydrograph type = Disturbed

-- Total Area = 1.9 acres

-- Storm data

Total precipitation = 1.9 inches

Storm type = SCS 6 hour design storm

Peak Discharge = 1.91 cfs

Discharge volume = 0.22 acre ft

Project Title = Lila Canyon Pond 1 (10/24)

WATERSHED HYDROGRAPH

Inflow into structure # 1

Structure type: Null

-- Watershed data for watershed # 1

Curve number = 95.0

Area = 1.9 acres

Hydraulic length = 380.00 feet

Elevation change = 50.0 feet.

Concentration time = 0.03 hours

Unit hydrograph type = Disturbed

-- Total Area = 1.9 acres

-- Storm data

Total precipitation = 1.9 inches

Storm type = SCS Type 2 storm, 24 hour storm

Peak Discharge = 1.99 cfs

Discharge volume = 0.22 acre ft

Triangular Hydrograph Calculations using

SCSHYDRO Program

Watershed I.D.:
Pond 2- 25yr-6hr

INPUT SUMMARY

STORM :	WATERSHED :
Dist.= SCS Type `b'	Area = 0.24 acres
Depth = 1.50 inches	CN = 100.00
Duration = 6.0 hrs	Time conc.= 0.01 hrs

OUTPUT SUMMARY

Runoff depth:	1.500 inches
Initial abstr:	0.000 inches
Peak flow:	0.27 cfs (1.112 iph)
at time:	2.349 hrs

Triangular Hydrograph Calculations using

SCSHYDRO Program

Watershed I.D.:
Pond 2- 10yr-24hr

INPUT SUMMARY

STORM :	WATERSHED :
Dist.= SCS Type II	Area = 0.24 acres
Depth = 1.90 inches	CN = 100.00
Duration = 24.0 hrs	Time conc.= 0.01 hrs

OUTPUT SUMMARY

Runoff depth: 1.900 inches
Initial abstr: 0.000 inches
Peak flow: 0.35 cfs (1.447 iph)
at time: 11.952 hrs

Triangular Hydrograph Calculations using

SCSHYDRO Program

Watershed I.D.:
Pond 2- 10yr-6hr

INPUT SUMMARY

STORM :	WATERSHED :
Dist.= SCS Type `b'	Area = 0.24 acres
Depth = 1.30 inches	CN = 100.00
Duration = 6.0 hrs	Time conc.= 0.01 hrs

OUTPUT SUMMARY

Runoff depth:	1.300 inches
Initial abstr:	0.000 inches
Peak flow:	0.23 cfs (0.964 iph)
at time:	2.475 hrs

Project Title = LILA CANYON UA-1 (10/6)

WATERSHED HYDROGRAPH

Inflow into structure # 1

Structure type: Null

-- Watershed data for watershed # 1

Curve number = 75.0

Area = 248.8 acres

Hydraulic length = 9475.00 feet

Elevation change = 2020.0 feet.

Concentration time = 0.27 hours

Unit hydrograph type = Forested

-- Total Area = 248.8 acres

-- Storm data

Total precipitation = 1.3 inches

Storm type = SCS 6 hour design storm

Peak Discharge = 7.03 cfs

Discharge volume = 2.10 acre ft

Project Title = LILA CANYON UA-1 (25/6)

WATERSHED HYDROGRAPH

Inflow into structure # 1

Structure type: Null

-- Watershed data for watershed # 1

Curve number = 75.0

Area = 248.8 acres

Hydraulic length = 9475.00 feet

Elevation change = 2020.0 feet.

Concentration time = 0.27 hours

Unit hydrograph type = Forested

-- Total Area = 248.8 acres

-- Storm data

Total precipitation = 1.5 inches

Storm type = SCS 6 hour design storm

Peak Discharge = 10.33 cfs

Discharge volume = 3.46 acre ft

Project Title = LILA CANYON UA-1 (100/6)

WATERSHED HYDROGRAPH

Inflow into structure # 1

Structure type: Null

-- Watershed data for watershed # 1

Curve number = 75.0

Area = 248.8 acres

Hydraulic length = 9475.00 feet

Elevation change = 2020.0 feet.

Concentration time = 0.27 hours

Unit hydrograph type = Forested

-- Total Area = 248.8 acres

-- Storm data

Total precipitation = 1.9 inches

Storm type = SCS 6 hour design storm

Peak Discharge = 20.47 cfs

Discharge volume = 6.91 acre ft

Project Title = LILA CANYON UA-1 (10/24)

WATERSHED HYDROGRAPH

Inflow into structure # 1

Structure type: Null

-- Watershed data for watershed # 1

Curve number = 75.0

Area = 248.8 acres

Hydraulic length = 9475.00 feet

Elevation change = 2020.0 feet.

Concentration time = 0.27 hours

Unit hydrograph type = Forested

-- Total Area = 248.8 acres

-- Storm data

Total precipitation = 1.9 inches

Storm type = SCS Type 2 storm, 24 hour design storm

Peak Discharge = 25.45 cfs

Discharge volume = 6.91 acre ft

Project Title = LILA CANYON UA-2a (10/6)

WATERSHED HYDROGRAPH

Inflow into structure # 1

Structure type: Null

-- Watershed data for watershed # 1

Curve number = 83.0

Area = 7.7 acres

Hydraulic length = 1360.00 feet

Elevation change = 1010.0 feet.

Concentration time = 0.04 hours

Unit hydrograph type = Forested

-- Total Area = 7.7 acres

-- Storm data

Total precipitation = 1.3 inches

Storm type = SCS 6 hour design storm

Peak Discharge = 0.98 cfs

Discharge volume = 0.17 acre ft

Project Title = LILA CANYON UA-2a (25/6)

WATERSHED HYDROGRAPH

Inflow into structure # 1

Structure type: Null

-- Watershed data for watershed # 1

Curve number = 83.0

Area = 7.7 acres

Hydraulic length = 1360.00 feet

Elevation change = 1010.0 feet.

Concentration time = 0.04 hours

Unit hydrograph type = Forested

-- Total Area = 7.7 acres

-- Storm data

Total precipitation = 1.5 inches

Storm type = SCS 6 hour design storm

Peak Discharge = 1.51 cfs

Discharge volume = 0.24 acre ft

Project Title = LILA CANYON UA-2a (100/6)

WATERSHED HYDROGRAPH

Inflow into structure # 1

Structure type: Null

-- Watershed data for watershed # 1

Curve number = 83.0

Area = 7.7 acres

Hydraulic length = 1360.00 feet

Elevation change = 1010.0 feet.

Concentration time = 0.04 hours

Unit hydrograph type = Forested

-- Total Area = 7.7 acres

-- Storm data

Total precipitation = 1.9 inches

Storm type = SCS 6 hour design storm

Peak Discharge = 2.76 cfs

Discharge volume = 0.40 acre ft

Project Title = LILA CANYON UA-2a (10/24)

WATERSHED HYDROGRAPH

Inflow into structure # 1

Structure type: Null

-- Watershed data for watershed # 1

Curve number = 83.0

Area = 7.7 acres

Hydraulic length = 1360.00 feet

Elevation change = 1010.0 feet.

Concentration time = 0.04 hours

Unit hydrograph type = Forested

-- Total Area = 7.7 acres

-- Storm data

Total precipitation = 1.9 inches

Storm type = SCS Type 2 storm, 24 hour storm

Peak Discharge = 3.29 cfs

Discharge volume = 0.40 acre ft

Project Title = LILA CANYON UA-2b (10/6)

WATERSHED HYDROGRAPH

Inflow into structure # 1

Structure type: Null

-- Watershed data for watershed # 1

Curve number = 83.0

Area = 4.1 acres

Hydraulic length = 660.00 feet

Elevation change = 410.0 feet.

Concentration time = 0.02 hours

Unit hydrograph type = Forested

-- Total Area = 4.1 acres

-- Storm data

Total precipitation = 1.3 inches

Storm type = SCS 6 hour design storm

Peak Discharge = 0.54 cfs

Discharge volume = 0.09 acre ft

Project Title = LILA CANYON UA-2b (25/6)

WATERSHED HYDROGRAPH

Inflow into structure # 1

Structure type: Null

-- Watershed data for watershed # 1

Curve number = 83.0

Area = 4.1 acres

Hydraulic length = 660.00 feet

Elevation change = 410.0 feet.

Concentration time = 0.02 hours

Unit hydrograph type = Forested

-- Total Area = 4.1 acres

-- Storm data

Total precipitation = 1.5 inches

Storm type = SCS 6 hour design storm

Peak Discharge = 0.83 cfs

Discharge volume = 0.13 acre ft

Project Title = LILA CANYON UA-2b (100/6)

WATERSHED HYDROGRAPH

Inflow into structure # 1

Structure type: Null

-- Watershed data for watershed # 1

Curve number = 83.0

Area = 4.1 acres

Hydraulic length = 660.00 feet

Elevation change = 410.0 feet.

Concentration time = 0.02 hours

Unit hydrograph type = Forested

-- Total Area = 4.1 acres

-- Storm data

Total precipitation = 1.9 inches

Storm type = SCS 6 hour design storm

Peak Discharge = 1.51 cfs

Discharge volume = 0.21 acre ft

Project Title = LILA CANYON UA-2b (10/24)

WATERSHED HYDROGRAPH

Inflow into structure # 1

Structure type: Null

-- Watershed data for watershed # 1

Curve number = 83.0

Area = 4.1 acres

Hydraulic length = 660.00 feet

Elevation change = 410.0 feet.

Concentration time = 0.02 hours

Unit hydrograph type = Forested

-- Total Area = 4.1 acres

-- Storm data

Total precipitation = 1.9 inches

Storm type = SCS Type 2 24 hour design storm

Peak Discharge = 1.80 cfs

Discharge volume = 0.21 acre ft

Project Title = LILA CANYON UA-4 (10/6)

WATERSHED HYDROGRAPH

Inflow into structure # 1

Structure type: Null

-- Watershed data for watershed # 1

Curve number = 83.0

Area = 14.1 acres

Hydraulic length = 1950.00 feet

Elevation change = 595.0 feet.

Concentration time = 0.07 hours

Unit hydrograph type = Disturbed

-- Total Area = 14.1 acres

-- Storm data

Total precipitation = 1.3 inches

Storm type = SCS 6 hour design storm

Peak Discharge = 3.14 cfs

Discharge volume = 0.32 acre ft

Project Title = LILA CANYON UA-4 (25/6)

WATERSHED HYDROGRAPH

Inflow into structure # 1

Structure type: Null

-- Watershed data for watershed # 1

Curve number = 83.0

Area = 14.1 acres

Hydraulic length = 1950.00 feet

Elevation change = 595.0 feet.

Concentration time = 0.07 hours

Unit hydrograph type = Disturbed

-- Total Area = 14.1 acres

-- Storm data

Total precipitation = 1.5 inches

Storm type = SCS 6 hour design storm

Peak Discharge = 4.65 cfs

Discharge volume = 0.44 acre ft

Project Title = LILA CANYON UA-4 (100/6)

WATERSHED HYDROGRAPH

Inflow into structure # 1

Structure type: Null

-- Watershed data for watershed # 1

Curve number = 83.0

Area = 14.1 acres

Hydraulic length = 1950.00 feet

Elevation change = 595.0 feet.

Concentration time = 0.07 hours

Unit hydrograph type = Disturbed

-- Total Area = 14.1 acres

-- Storm data

Total precipitation = 1.9 inches

Storm type = SCS 6 hour design storm

Peak Discharge = 8.04 cfs

Discharge volume = 0.74 acre ft

Project Title = LILA CANYON UA-4 (10/24)

WATERSHED HYDROGRAPH

Inflow into structure # 1

Structure type: Null

-- Watershed data for watershed # 1

Curve number = 83.0

Area = 14.1 acres

Hydraulic length = 1950.00 feet

Elevation change = 595.0 feet.

Concentration time = 0.07 hours

Unit hydrograph type = Disturbed

-- Total Area = 14.1 acres

-- Storm data

Total precipitation = 1.9 inches

Storm type = SCS Type 2 storm, 24 hour storm

Peak Discharge = 9.20 cfs

Discharge volume = 0.74 acre ft

Project Title = Lila Canyon UA-5a (10/6)

WATERSHED HYDROGRAPH

Inflow into structure # 1

Structure type: Null

-- Watershed data for watershed # 1

Curve number = 90.0

Area = 1.0 acres

Hydraulic length = 355.00 feet

Elevation change = 35.0 feet.

Concentration time = 0.03 hours

Unit hydrograph type = Disturbed

-- Total Area = 1.0 acres

-- Storm data

Total precipitation = 1.3 inches

Storm type = SCS 6 hour design storm

Peak Discharge = 0.43 cfs

Discharge volume = 0.05 acre ft

Project Title = Lila Canyon UA-5a (25/6)

WATERSHED HYDROGRAPH

Inflow into structure # 1

Structure type: Null

-- Watershed data for watershed # 1

Curve number = 90.0

Area = 1.0 acres

Hydraulic length = 355.00 feet

Elevation change = 35.0 feet.

Concentration time = 0.03 hours

Unit hydrograph type = Disturbed

-- Total Area = 1.0 acres

-- Storm data

Total precipitation = 1.5 inches

Storm type = SCS 6 hour design storm

Peak Discharge = 0.56 cfs

Discharge volume = 0.06 acre ft

Project Title = Lila Canyon UA-5a (100/6)

WATERSHED HYDROGRAPH

Inflow into structure # 1

Structure type: Null

-- Watershed data for watershed # 1

Curve number = 90.0

Area = 1.0 acres

Hydraulic length = 355.00 feet

Elevation change = 35.0 feet.

Concentration time = 0.03 hours

Unit hydrograph type = Disturbed

-- Total Area = 1.0 acres

-- Storm data

Total precipitation = 1.9 inches

Storm type = SCS 6 hour design storm

Peak Discharge = 0.82 cfs

Discharge volume = 0.09 acre ft

Project Title = Lila Canyon UA-5a (10/24)

WATERSHED HYDROGRAPH

Inflow into structure # 1

Structure type: Null

-- Watershed data for watershed # 1

Curve number = 90.0

Area = 1.0 acres

Hydraulic length = 355.00 feet

Elevation change = 35.0 feet.

Concentration time = 0.03 hours

Unit hydrograph type = Disturbed

-- Total Area = 1.0 acres

-- Storm data

Total precipitation = 1.9 inches

Storm type = SCS Type 2 24 hour design storm

Peak Discharge = 0.88 cfs

Discharge volume = 0.09 acre ft

Project Title = Lila Canyon UA-5b (10/6)

WATERSHED HYDROGRAPH

Inflow into structure # 1

Structure type: Null

-- Watershed data for watershed # 1

Curve number = 90.0

Area = 1.4 acres

Hydraulic length = 600.00 feet

Elevation change = 45.0 feet.

Concentration time = 0.05 hours

Unit hydrograph type = Disturbed

-- Total Area = 1.4 acres

-- Storm data

Total precipitation = 1.3 inches

Storm type = SCS 6 hour design storm

Peak Discharge = 0.68 cfs

Discharge volume = 0.06 acre ft

Project Title = Lila Canyon UA-5b (25/6)

WATERSHED HYDROGRAPH

Inflow into structure # 1

Structure type: Null

-- Watershed data for watershed # 1

Curve number = 90.0

Area = 1.4 acres

Hydraulic length = 600.00 feet

Elevation change = 45.0 feet.

Concentration time = 0.05 hours

Unit hydrograph type = Disturbed

-- Total Area = 1.4 acres

-- Storm data

Total precipitation = 1.5 inches

Storm type = SCS 6 hour design storm

Peak Discharge = 0.87 cfs

Discharge volume = 0.08 acre ft

Project Title = Lila Canyon UA-5b (100/6)

WATERSHED HYDROGRAPH

Inflow into structure # 1

Structure type: Null

-- Watershed data for watershed # 1

Curve number = 90.0

Area = 1.4 acres

Hydraulic length = 600.00 feet

Elevation change = 45.0 feet.

Concentration time = 0.05 hours

Unit hydrograph type = Disturbed

-- Total Area = 1.4 acres

-- Storm data

Total precipitation = 1.9 inches

Storm type = SCS 6 hour design storm

Peak Discharge = 1.28 cfs

Discharge volume = 0.12 acre ft

Project Title = Lila Canyon UA-5b (10/24)

WATERSHED HYDROGRAPH

Inflow into structure # 1

Structure type: Null

-- Watershed data for watershed # 1

Curve number = 90.0

Area = 1.4 acres

Hydraulic length = 600.00 feet

Elevation change = 45.0 feet.

Concentration time = 0.05 hours

Unit hydrograph type = Disturbed

-- Total Area = 1.4 acres

-- Storm data

Total precipitation = 1.9 inches

Storm type = SCS Type 2 storm, 24 hour storm

Peak Discharge = 1.38 cfs

Discharge volume = 0.12 acre ft

Project Title = LILA CANYON UA-6a (10/6)

WATERSHED HYDROGRAPH

Inflow into structure # 1

Structure type: Null

-- Watershed data for watershed # 1

Curve number = 90.0

Area = 1.5 acres

Hydraulic length = 230.00 feet

Elevation change = 80.0 feet.

Concentration time = 0.01 hours

Unit hydrograph type = Disturbed

-- Total Area = 1.5 acres

-- Storm data

Total precipitation = 1.3 inches

Storm type = SCS 6 hour design storm

Peak Discharge = 0.47 cfs

Discharge volume = 0.06 acre ft

Project Title = LILA CANYON UA-6a (25/6)

WATERSHED HYDROGRAPH

Inflow into structure # 1

Structure type: Null

-- Watershed data for watershed # 1

Curve number = 90.0

Area = 1.5 acres

Hydraulic length = 230.00 feet

Elevation change = 80.0 feet.

Concentration time = 0.01 hours

Unit hydrograph type = Disturbed

-- Total Area = 1.5 acres

-- Storm data

Total precipitation = 1.5 inches

Storm type = SCS 6 hour design storm

Peak Discharge = 0.60 cfs

Discharge volume = 0.08 acre ft

Project Title = LILA CANYON UA-6a (100/6)

WATERSHED HYDROGRAPH

Inflow into structure # 1

Structure type: Null

-- Watershed data for watershed # 1

Curve number = 90.0

Area = 1.5 acres

Hydraulic length = 230.00 feet

Elevation change = 80.0 feet.

Concentration time = 0.01 hours

Unit hydrograph type = Disturbed

-- Total Area = 1.5 acres

-- Storm data

Total precipitation = 1.9 inches

Storm type = SCS 6 hour design storm

Peak Discharge = 0.88 cfs

Discharge volume = 0.12 acre ft

Project Title = LILA CANYON UA-6a (10/24)

WATERSHED HYDROGRAPH

Inflow into structure # 1

Structure type: Null

-- Watershed data for watershed # 1

Curve number = 90.0

Area = 1.5 acres

Hydraulic length = 230.00 feet

Elevation change = 80.0 feet.

Concentration time = 0.01 hours

Unit hydrograph type = Disturbed

-- Total Area = 1.5 acres

-- Storm data

Total precipitation = 1.9 inches

Storm type = SCS Type 2 storm, 24 hour storm

Peak Discharge = 0.95 cfs

Discharge volume = 0.12 acre ft

Project Title = LILA CANYON UA-6b (10/6)

WATERSHED HYDROGRAPH

Inflow into structure # 1

Structure type: Null

-- Watershed data for watershed # 1

Curve number = 90.0

Area = 0.4 acres

Hydraulic length = 90.00 feet

Elevation change = 30.0 feet.

Concentration time = 0.01 hours

Unit hydrograph type = Disturbed

-- Total Area = 0.4 acres

-- Storm data

Total precipitation = 1.3 inches

Storm type = SCS 6 hour design storm

Peak Discharge = 0.10 cfs

Discharge volume = 0.02 acre ft

Project Title = LILA CANYON UA-6b (25/6)

WATERSHED HYDROGRAPH

Inflow into structure # 1

Structure type: Null

-- Watershed data for watershed # 1

Curve number = 90.0

Area = 0.4 acres

Hydraulic length = 90.00 feet

Elevation change = 30.0 feet.

Concentration time = 0.01 hours

Unit hydrograph type = Disturbed

-- Total Area = 0.4 acres

-- Storm data

Total precipitation = 1.5 inches

Storm type = SCS 6 hour design storm

Peak Discharge = 0.13 cfs

Discharge volume = 0.02 acre ft

Project Title = LILA CANYON UA-6b (100/6)

WATERSHED HYDROGRAPH

Inflow into structure # 1

Structure type: Null

-- Watershed data for watershed # 1

Curve number = 90.0

Area = 0.4 acres

Hydraulic length = 90.00 feet

Elevation change = 30.0 feet.

Concentration time = 0.01 hours

Unit hydrograph type = Disturbed

-- Total Area = 0.4 acres

-- Storm data

Total precipitation = 1.9 inches

Storm type = SCS 6 hour design storm

Peak Discharge = 0.19 cfs

Discharge volume = 0.03 acre ft

Project Title = LILA CANYON UA-6b (10/24)

WATERSHED HYDROGRAPH

Inflow into structure # 1

Structure type: Null

-- Watershed data for watershed # 1

Curve number = 90.0

Area = 0.4 acres

Hydraulic length = 90.00 feet

Elevation change = 30.0 feet.

Concentration time = 0.01 hours

Unit hydrograph type = Disturbed

-- Total Area = 0.4 acres

-- Storm data

Total precipitation = 1.9 inches

Storm type = SCS Type 2 storm, 24 hour storm

Peak Discharge = 0.21 cfs

Discharge volume = 0.03 acre ft

Triangular Hydrograph Calculations using

SCSHYDRO Program

Watershed I.D.:
UA-6c- 25yr-6hr

INPUT SUMMARY

STORM :	WATERSHED :
Dist.= SCS Type `b'	Area = 0.44 acres
Depth = 1.50 inches	CN = 90.00
Duration = 6.0 hrs	Time conc.= 0.02 hrs

OUTPUT SUMMARY

Runoff depth:	0.683 inches
Initial abstr:	0.222 inches
Peak flow:	0.30 cfs (0.674 iph)
at time:	2.501 hrs

Triangular Hydrograph Calculations using

SCSHYDRO Program

Watershed I.D.:
UA-6c- 10yr-24hr

INPUT SUMMARY

STORM :	WATERSHED :
Dist.= SCS Type II	Area = 0.44 acres
Depth = 1.90 inches	CN = 90.00
Duration = 24.0 hrs	Time conc.= 0.02 hrs

OUTPUT SUMMARY

Runoff depth:	1.009 inches
Initial abstr:	0.222 inches
Peak flow:	0.47 cfs (1.052 iph)
at time:	12.003 hrs

Triangular Hydrograph Calculations using

SCSHYDRO Program

Watershed I.D.:
UA-6c- 10yr-6hr

INPUT SUMMARY

STORM :	WATERSHED :
Dist.= SCS Type `b'	Area = 0.44 acres
Depth = 1.30 inches	CN = 90.00
Duration = 6.0 hrs	Time conc.= 0.02 hrs

OUTPUT SUMMARY

Runoff depth:	0.531 inches
Initial abstr:	0.222 inches
Peak flow:	0.23 cfs (0.528 iph)
at time:	2.501 hrs

Project Title = LILA CANYON UA-8 (10/6)

WATERSHED HYDROGRAPH

Inflow into structure # 1

Structure type: Null

-- Watershed data for watershed # 1

Curve number = 90.0

Area = 0.4 acres

Hydraulic length = 100.00 feet

Elevation change = 30.0 feet.

Concentration time = 0.02 hours

Unit hydrograph type = Disturbed

-- Total Area = 0.4 acres

-- Storm data

Total precipitation = 1.3 inches

Storm type = SCS 6 hour design storm

Peak Discharge = 0.14 cfs

Discharge volume = 0.02 acre ft

Project Title = LILA CANYON UA-8 (25/6)

WATERSHED HYDROGRAPH

Inflow into structure # 1

Structure type: Null

-- Watershed data for watershed # 1

Curve number = 90.0

Area = 0.4 acres

Hydraulic length = 100.00 feet

Elevation change = 30.0 feet.

Concentration time = 0.02 hours

Unit hydrograph type = Disturbed

-- Total Area = 0.4 acres

-- Storm data

Total precipitation = 1.5 inches

Storm type = SCS 6 hour design storm

Peak Discharge = 0.18 cfs

Discharge volume = 0.02 acre ft

Project Title = LILA CANYON UA-8 (100/6)

WATERSHED HYDROGRAPH

Inflow into structure # 1

Structure type: Null

-- Watershed data for watershed # 1

Curve number = 90.0

Area = 0.4 acres

Hydraulic length = 100.00 feet

Elevation change = 30.0 feet.

Concentration time = 0.02 hours

Unit hydrograph type = Disturbed

-- Total Area = 0.4 acres

-- Storm data

Total precipitation = 1.9 inches

Storm type = SCS 6 hour design storm

Peak Discharge = 0.26 cfs

Discharge volume = 0.03 acre ft

Project Title = LILA CANYON UA-8 (10/24)

WATERSHED HYDROGRAPH

Inflow into structure # 1

Structure type: Null

-- Watershed data for watershed # 1

Curve number = 90.0

Area = 0.4 acres

Hydraulic length = 100.00 feet

Elevation change = 30.0 feet.

Concentration time = 0.02 hours

Unit hydrograph type = Disturbed

-- Total Area = 0.4 acres

-- Storm data

Total precipitation = 1.9 inches

Storm type = SCS Type 1 storm, 24 hour storm

Peak Discharge = 0.14 cfs

Discharge volume = 0.03 acre ft

Lila Canyon Mine
Ditch And Culvert Calculations

Hydraulic Analysis Report

Project Data

Project Title: Project - UEI Lila Canyon - 10yr-6r Flows

Designer:

Project Date: Thursday, October 30, 2014

Project Units: U.S. Customary Units

Notes:

Channel Analysis: DD-1a

Notes:

Input Parameters

Channel Type: Triangular

Side Slope 1 (Z1): 2.0000 (ft/ft)

Side Slope 2 (Z2): 2.0000 (ft/ft)

Longitudinal Slope: 0.1142 (ft/ft)

Manning's n: 0.0350

Flow: 0.5200 (cfs)

Result Parameters

Depth: 0.2718 (ft)

Area of Flow: 0.1477 (ft^2)

Wetted Perimeter: 1.2154 (ft)

Average Velocity: 3.5204 (ft/s)

Top Width: 1.0871 (ft)

Froude Number: 1.6830

Critical Depth: 0.3347 (ft)

Critical Velocity: 2.3213 (ft/s)

Critical Slope: 0.0376 (ft/ft)

Critical Top Width: 1.3387 (ft)

Calculated Max Shear Stress: 1.9366 (lb/ft^2)

Calculated Avg Shear Stress: 0.8661 (lb/ft^2)

Channel Analysis: DD-1b

Notes:

Input Parameters

Channel Type: Trapezoidal

Side Slope 1 (Z1): 2.0000 (ft/ft)

Side Slope 2 (Z2): 2.0000 (ft/ft)

Channel Width: 1.5000 (ft)

Longitudinal Slope: 0.1120 (ft/ft)

Manning's n: 0.0400

Flow: 1.3100 (cfs)

Result Parameters

Depth: 0.1942 (ft)

Area of Flow: 0.3666 (ft^2)

Wetted Perimeter: 2.3683 (ft)

Average Velocity: 3.5731 (ft/s)

Top Width: 2.2766 (ft)

Froude Number: 1.5691

Critical Depth: 0.2549 (ft)

Critical Velocity: 2.5574 (ft/s)

Critical Slope: 0.0422 (ft/ft)

Critical Top Width: 2.5195 (ft)

Calculated Max Shear Stress: 1.3569 (lb/ft^2)

Calculated Avg Shear Stress: 1.0819 (lb/ft^2)

Channel Analysis: DC-1

Notes:

Input Parameters

Channel Type: Circular

Pipe Diameter: 1.5000 (ft)

Longitudinal Slope: 0.1333 (ft/ft)

Manning's n: 0.0250

Flow: 2.8500 (cfs)

Result Parameters

Depth: 0.3831 (ft)

Area of Flow: 0.3561 (ft^2)

Wetted Perimeter: 1.5895 (ft)

Average Velocity: 8.0042 (ft/s)

Top Width: 1.3083 (ft)

Froude Number: 2.7038

Critical Depth: 0.6409 (ft)

Critical Velocity: 3.9558 (ft/s)

Critical Slope: 0.0189 (ft/ft)

Critical Top Width: 1.4840 (ft)

Calculated Max Shear Stress: 3.1867 (lb/ft^2)

Calculated Avg Shear Stress: 1.8633 (lb/ft^2)

Channel Analysis: DC-2

Notes:

Input Parameters

Channel Type: Circular

Pipe Diameter: 1.5000 (ft)

Longitudinal Slope: 0.1077 (ft/ft)

Manning's n: 0.0250

Flow: 3.3700 (cfs)

Result Parameters

Depth: 0.4406 (ft)

Area of Flow: 0.4330 (ft^2)

Wetted Perimeter: 1.7184 (ft)

Average Velocity: 7.7824 (ft/s)

Top Width: 1.3664 (ft)

Froude Number: 2.4362

Critical Depth: 0.6995 (ft)

Critical Velocity: 4.1717 (ft/s)

Critical Slope: 0.0194 (ft/ft)

Critical Top Width: 1.4966 (ft)

Calculated Max Shear Stress: 2.9612 (lb/ft^2)

Calculated Avg Shear Stress: 1.6935 (lb/ft^2)

Channel Analysis: DD-3

Notes:

Input Parameters

Channel Type: Triangular

Side Slope 1 (Z1): 2.0000 (ft/ft)

Side Slope 2 (Z2): 2.0000 (ft/ft)

Longitudinal Slope: 0.0250 (ft/ft)

Manning's n: 0.0350

Flow: 0.1100 (cfs)

Result Parameters

Depth: 0.2018 (ft)

Area of Flow: 0.0814 (ft^2)

Wetted Perimeter: 0.9025 (ft)

Average Velocity: 1.3506 (ft/s)

Top Width: 0.8072 (ft)

Froude Number: 0.7493

Critical Depth: 0.1798 (ft)

Critical Velocity: 1.7014 (ft/s)

Critical Slope: 0.0463 (ft/ft)

Critical Top Width: 0.7192 (ft)

Calculated Max Shear Stress: 0.3148 (lb/ft^2)

Calculated Avg Shear Stress: 0.1408 (lb/ft^2)

Channel Analysis: DC-3

Notes:

Input Parameters

Channel Type: Circular

Pipe Diameter: 1.5000 (ft)

Longitudinal Slope: 0.5000 (ft/ft)

Manning's n: 0.0250

Flow: 0.2100 (cfs)

Result Parameters

Depth: 0.0795 (ft)

Area of Flow: 0.0360 (ft^2)

Wetted Perimeter: 0.6968 (ft)

Average Velocity: 5.8320 (ft/s)

Top Width: 0.6721 (ft)

Froude Number: 4.4400

Critical Depth: 0.1685 (ft)

Critical Velocity: 1.9262 (ft/s)

Critical Slope: 0.0208 (ft/ft)

Critical Top Width: 0.9472 (ft)

Calculated Max Shear Stress: 2.4800 (lb/ft^2)

Calculated Avg Shear Stress: 1.6122 (lb/ft^2)

Channel Analysis: DD-5a

Notes:

Input Parameters

Channel Type: Trapezoidal

Side Slope 1 (Z1): 2.0000 (ft/ft)

Side Slope 2 (Z2): 2.0000 (ft/ft)

Channel Width: 1.5000 (ft)

Longitudinal Slope: 0.1311 (ft/ft)

Manning's n: 0.0450

Flow: 1.8100 (cfs)

Result Parameters

Depth: 0.2374 (ft)

Area of Flow: 0.4689 (ft^2)

Wetted Perimeter: 2.5618 (ft)

Average Velocity: 3.8603 (ft/s)

Top Width: 2.4497 (ft)

Froude Number: 1.5549

Critical Depth: 0.3084 (ft)

Critical Velocity: 2.7725 (ft/s)

Critical Slope: 0.0510 (ft/ft)

Critical Top Width: 2.7336 (ft)

Calculated Max Shear Stress: 1.9423 (lb/ft^2)

Calculated Avg Shear Stress: 1.4973 (lb/ft^2)

Channel Analysis: DC-20

Notes:

Input Parameters

Channel Type: Circular

Pipe Diameter: 2.0000 (ft)

Longitudinal Slope: 0.0963 (ft/ft)

Manning's n: 0.0250

Flow: 4.3000 (cfs)

Result Parameters

Depth: 0.4635 (ft)

Area of Flow: 0.5517 (ft^2)

Wetted Perimeter: 2.0089 (ft)

Average Velocity: 7.7940 (ft/s)

Top Width: 1.6878 (ft)

Froude Number: 2.4024

Critical Depth: 0.7285 (ft)

Critical Velocity: 4.1563 (ft/s)

Critical Slope: 0.0166 (ft/ft)

Critical Top Width: 1.9249 (ft)

Calculated Max Shear Stress: 2.7850 (lb/ft^2)

Calculated Avg Shear Stress: 1.6502 (lb/ft^2)

Channel Analysis: DD-6a

Notes:

Input Parameters

Channel Type: Triangular

Side Slope 1 (Z1): 2.0000 (ft/ft)

Side Slope 2 (Z2): 2.0000 (ft/ft)

Longitudinal Slope: 0.0640 (ft/ft)

Manning's n: 0.0350

Flow: 0.1200 (cfs)

Result Parameters

Depth: 0.1748 (ft)

Area of Flow: 0.0611 (ft^2)

Wetted Perimeter: 0.7817 (ft)

Average Velocity: 1.9637 (ft/s)

Top Width: 0.6992 (ft)

Froude Number: 1.1706

Critical Depth: 0.1862 (ft)

Critical Velocity: 1.7313 (ft/s)

Critical Slope: 0.0457 (ft/ft)

Critical Top Width: 0.7447 (ft)

Calculated Max Shear Stress: 0.6981 (lb/ft^2)

Calculated Avg Shear Stress: 0.3122 (lb/ft^2)

Channel Analysis: DC-21

Notes:

Input Parameters

Channel Type: Circular

Pipe Diameter: 2.0000 (ft)

Longitudinal Slope: 0.0340 (ft/ft)

Manning's n: 0.0250

Flow: 0.3500 (cfs)

Result Parameters

Depth: 0.1770 (ft)

Area of Flow: 0.1366 (ft^2)

Wetted Perimeter: 1.2081 (ft)

Average Velocity: 2.5625 (ft/s)

Top Width: 1.1360 (ft)

Froude Number: 1.3024

Critical Depth: 0.2021 (ft)

Critical Velocity: 2.1073 (ft/s)

Critical Slope: 0.0194 (ft/ft)

Critical Top Width: 1.2057 (ft)

Calculated Max Shear Stress: 0.3754 (lb/ft^2)

Calculated Avg Shear Stress: 0.2399 (lb/ft^2)

Channel Analysis: DC-22

Notes:

Input Parameters

Channel Type: Circular

Pipe Diameter: 2.0000 (ft)

Longitudinal Slope: 0.2830 (ft/ft)

Manning's n: 0.0250

Flow: 5.8800 (cfs)

Result Parameters

Depth: 0.4142 (ft)

Area of Flow: 0.4702 (ft^2)

Wetted Perimeter: 1.8899 (ft)

Average Velocity: 12.5062 (ft/s)

Top Width: 1.6209 (ft)

Froude Number: 4.0922

Critical Depth: 0.8569 (ft)

Critical Velocity: 4.5736 (ft/s)

Critical Slope: 0.0171 (ft/ft)

Critical Top Width: 1.9794 (ft)

Calculated Max Shear Stress: 7.3144 (lb/ft^2)

Calculated Avg Shear Stress: 4.3933 (lb/ft^2)

Channel Analysis: DC-23

Notes:

Input Parameters

Channel Type: Circular

Pipe Diameter: 2.0000 (ft)

Longitudinal Slope: 0.0779 (ft/ft)

Manning's n: 0.0250

Flow: 6.0900 (cfs)

Result Parameters

Depth: 0.5835 (ft)

Area of Flow: 0.7625 (ft^2)

Wetted Perimeter: 2.2824 (ft)

Average Velocity: 7.9868 (ft/s)

Top Width: 1.8183 (ft)

Froude Number: 2.1734

Critical Depth: 0.8730 (ft)

Critical Velocity: 4.6221 (ft/s)

Critical Slope: 0.0172 (ft/ft)

Critical Top Width: 1.9838 (ft)

Calculated Max Shear Stress: 2.8363 (lb/ft^2)

Calculated Avg Shear Stress: 1.6240 (lb/ft^2)

Channel Analysis: DC-24

Notes:

Input Parameters

Channel Type: Circular

Pipe Diameter: 36.0000 (ft)

Longitudinal Slope: 0.0606 (ft/ft)

Manning's n: 0.0250

Flow: 6.5000 (cfs)

Result Parameters

Depth: 0.2991 (ft)

Area of Flow: 1.3055 (ft^2)

Wetted Perimeter: 6.5722 (ft)

Average Velocity: 4.9789 (ft/s)

Top Width: 6.5357 (ft)

Froude Number: 1.9632

Critical Depth: 0.4191 (ft)

Critical Velocity: 3.0049 (ft/s)

Critical Slope: 0.0141 (ft/ft)

Critical Top Width: 7.7235 (ft)

Calculated Max Shear Stress: 1.1311 (lb/ft^2)

Calculated Avg Shear Stress: 0.7511 (lb/ft^2)

Channel Analysis: DC-4

Notes:

Input Parameters

Channel Type: Circular

Pipe Diameter: 1.2500 (ft)

Longitudinal Slope: 0.1050 (ft/ft)

Manning's n: 0.0250

Flow: 0.1700 (cfs)

Result Parameters

Depth: 0.1089 (ft)

Area of Flow: 0.0521 (ft^2)

Wetted Perimeter: 0.7491 (ft)

Average Velocity: 3.2599 (ft/s)

Top Width: 0.7050 (ft)

Froude Number: 2.1123

Critical Depth: 0.1590 (ft)

Critical Velocity: 1.8719 (ft/s)

Critical Slope: 0.0215 (ft/ft)

Critical Top Width: 0.8330 (ft)

Calculated Max Shear Stress: 0.7135 (lb/ft^2)

Calculated Avg Shear Stress: 0.4561 (lb/ft^2)

Channel Analysis: DD-5b

Notes:

Input Parameters

Channel Type: Triangular

Side Slope 1 (Z1): 2.0000 (ft/ft)

Side Slope 2 (Z2): 2.0000 (ft/ft)

Longitudinal Slope: 0.1050 (ft/ft)

Manning's n: 0.0350

Flow: 0.0900 (cfs)

Result Parameters

Depth: 0.1430 (ft)

Area of Flow: 0.0409 (ft^2)

Wetted Perimeter: 0.6396 (ft)

Average Velocity: 2.2002 (ft/s)

Top Width: 0.5720 (ft)

Froude Number: 1.4500

Critical Depth: 0.1659 (ft)

Critical Velocity: 1.6345 (ft/s)

Critical Slope: 0.0475 (ft/ft)

Critical Top Width: 0.6637 (ft)

Calculated Max Shear Stress: 0.9370 (lb/ft^2)

Calculated Avg Shear Stress: 0.4190 (lb/ft^2)

Channel Analysis: DC-5

Notes:

Input Parameters

Channel Type: Circular

Pipe Diameter: 1.2500 (ft)

Longitudinal Slope: 0.1050 (ft/ft)

Manning's n: 0.0250

Flow: 0.1700 (cfs)

Result Parameters

Depth: 0.1089 (ft)

Area of Flow: 0.0521 (ft^2)

Wetted Perimeter: 0.7491 (ft)

Average Velocity: 3.2599 (ft/s)

Top Width: 0.7050 (ft)

Froude Number: 2.1123

Critical Depth: 0.1590 (ft)

Critical Velocity: 1.8719 (ft/s)

Critical Slope: 0.0215 (ft/ft)

Critical Top Width: 0.8330 (ft)

Calculated Max Shear Stress: 0.7135 (lb/ft^2)

Calculated Avg Shear Stress: 0.4561 (lb/ft^2)

Channel Analysis: DD-5c

Notes:

Input Parameters

Channel Type: Triangular

Side Slope 1 (Z1): 2.0000 (ft/ft)

Side Slope 2 (Z2): 2.0000 (ft/ft)

Longitudinal Slope: 0.1050 (ft/ft)

Manning's n: 0.0350

Flow: 0.0900 (cfs)

Result Parameters

Depth: 0.1430 (ft)

Area of Flow: 0.0409 (ft^2)

Wetted Perimeter: 0.6396 (ft)

Average Velocity: 2.2002 (ft/s)

Top Width: 0.5720 (ft)

Froude Number: 1.4500

Critical Depth: 0.1659 (ft)

Critical Velocity: 1.6345 (ft/s)

Critical Slope: 0.0475 (ft/ft)

Critical Top Width: 0.6637 (ft)

Calculated Max Shear Stress: 0.9370 (lb/ft^2)

Calculated Avg Shear Stress: 0.4190 (lb/ft^2)

Channel Analysis: DC-6

Notes:

Input Parameters

Channel Type: Circular

Pipe Diameter: 1.2500 (ft)

Longitudinal Slope: 0.1050 (ft/ft)

Manning's n: 0.0250

Flow: 0.1700 (cfs)

Result Parameters

Depth: 0.1089 (ft)

Area of Flow: 0.0521 (ft^2)

Wetted Perimeter: 0.7491 (ft)

Average Velocity: 3.2599 (ft/s)

Top Width: 0.7050 (ft)

Froude Number: 2.1123

Critical Depth: 0.1590 (ft)

Critical Velocity: 1.8719 (ft/s)

Critical Slope: 0.0215 (ft/ft)

Critical Top Width: 0.8330 (ft)

Calculated Max Shear Stress: 0.7135 (lb/ft^2)

Calculated Avg Shear Stress: 0.4561 (lb/ft^2)

Channel Analysis: DC-25

Notes:

Input Parameters

Channel Type: Circular

Pipe Diameter: 2.0000 (ft)

Longitudinal Slope: 0.0826 (ft/ft)

Manning's n: 0.0250

Flow: 6.6700 (cfs)

Result Parameters

Depth: 0.6023 (ft)

Area of Flow: 0.7969 (ft^2)

Wetted Perimeter: 2.3236 (ft)

Average Velocity: 8.3702 (ft/s)

Top Width: 1.8350 (ft)

Froude Number: 2.2384

Critical Depth: 0.9150 (ft)

Critical Velocity: 4.7606 (ft/s)

Critical Slope: 0.0175 (ft/ft)

Critical Top Width: 1.9928 (ft)

Calculated Max Shear Stress: 3.1044 (lb/ft^2)

Calculated Avg Shear Stress: 1.7677 (lb/ft^2)

Channel Analysis: DD-6b

Notes:

Input Parameters

Channel Type: Triangular

Side Slope 1 (Z1): 2.0000 (ft/ft)

Side Slope 2 (Z2): 2.0000 (ft/ft)

Longitudinal Slope: 0.0050 (ft/ft)

Manning's n: 0.0350

Flow: 1.6000 (cfs)

Result Parameters

Depth: 0.7447 (ft)

Area of Flow: 1.1092 (ft^2)

Wetted Perimeter: 3.3305 (ft)

Average Velocity: 1.4425 (ft/s)

Top Width: 2.9789 (ft)

Froude Number: 0.4166

Critical Depth: 0.5247 (ft)

Critical Velocity: 2.9064 (ft/s)

Critical Slope: 0.0324 (ft/ft)

Critical Top Width: 2.0986 (ft)

Calculated Max Shear Stress: 0.2324 (lb/ft^2)

Calculated Avg Shear Stress: 0.1039 (lb/ft^2)

Channel Analysis: DD-6c

Notes:

Input Parameters

Channel Type: Triangular

Side Slope 1 (Z1): 2.0000 (ft/ft)

Side Slope 2 (Z2): 2.0000 (ft/ft)

Longitudinal Slope: 0.0338 (ft/ft)

Manning's n: 0.0350

Flow: 1.1800 (cfs)

Result Parameters

Depth: 0.4643 (ft)

Area of Flow: 0.4311 (ft^2)

Wetted Perimeter: 2.0764 (ft)

Average Velocity: 2.7370 (ft/s)

Top Width: 1.8572 (ft)

Froude Number: 1.0011

Critical Depth: 0.4645 (ft)

Critical Velocity: 2.7346 (ft/s)

Critical Slope: 0.0337 (ft/ft)

Critical Top Width: 1.8580 (ft)

Calculated Max Shear Stress: 0.9792 (lb/ft^2)

Calculated Avg Shear Stress: 0.4379 (lb/ft^2)

Channel Analysis: DC-8

Notes:

Input Parameters

Channel Type: Circular

Pipe Diameter: 1.5000 (ft)

Longitudinal Slope: 0.3880 (ft/ft)

Manning's n: 0.0250

Flow: 5.6700 (cfs)

Result Parameters

Depth: 0.4142 (ft)

Area of Flow: 0.3973 (ft^2)

Wetted Perimeter: 1.6599 (ft)

Average Velocity: 14.2724 (ft/s)

Top Width: 1.3413 (ft)

Froude Number: 4.6215

Critical Depth: 0.9185 (ft)

Critical Velocity: 4.9995 (ft/s)

Critical Slope: 0.0224 (ft/ft)

Critical Top Width: 1.4617 (ft)

Calculated Max Shear Stress: 10.0287 (lb/ft^2)

Calculated Avg Shear Stress: 5.7946 (lb/ft^2)

Channel Analysis: DD-7

Notes:

Input Parameters

Channel Type: Triangular

Side Slope 1 (Z1): 2.0000 (ft/ft)

Side Slope 2 (Z2): 2.0000 (ft/ft)

Longitudinal Slope: 0.0108 (ft/ft)

Manning's n: 0.0350

Flow: 2.5500 (cfs)

Result Parameters

Depth: 0.7677 (ft)

Area of Flow: 1.1787 (ft^2)

Wetted Perimeter: 3.4332 (ft)

Average Velocity: 2.1634 (ft/s)

Top Width: 3.0708 (ft)

Froude Number: 0.6154

Critical Depth: 0.6322 (ft)

Critical Velocity: 3.1903 (ft/s)

Critical Slope: 0.0304 (ft/ft)

Critical Top Width: 2.5287 (ft)

Calculated Max Shear Stress: 0.5174 (lb/ft^2)

Calculated Avg Shear Stress: 0.2314 (lb/ft^2)

Channel Analysis: DC-7

Notes:

Input Parameters

Channel Type: Circular

Pipe Diameter: 1.5000 (ft)

Longitudinal Slope: 0.4640 (ft/ft)

Manning's n: 0.0250

Flow: 4.5200 (cfs)

Result Parameters

Depth: 0.3530 (ft)

Area of Flow: 0.3172 (ft^2)

Wetted Perimeter: 1.5195 (ft)

Average Velocity: 14.2492 (ft/s)

Top Width: 1.2726 (ft)

Froude Number: 5.0297

Critical Depth: 0.8159 (ft)

Critical Velocity: 4.6013 (ft/s)

Critical Slope: 0.0207 (ft/ft)

Critical Top Width: 1.4942 (ft)

Calculated Max Shear Stress: 10.2211 (lb/ft^2)

Calculated Avg Shear Stress: 6.0443 (lb/ft^2)

Channel Analysis: DD-8a

Notes:

Input Parameters

Channel Type: Triangular

Side Slope 1 (Z1): 2.0000 (ft/ft)

Side Slope 2 (Z2): 2.0000 (ft/ft)

Longitudinal Slope: 0.2042 (ft/ft)

Manning's n: 0.0350

Flow: 0.1000 (cfs)

Result Parameters

Depth: 0.1313 (ft)

Area of Flow: 0.0345 (ft^2)

Wetted Perimeter: 0.5873 (ft)

Average Velocity: 2.8989 (ft/s)

Top Width: 0.5253 (ft)

Froude Number: 1.9936

Critical Depth: 0.1731 (ft)

Critical Velocity: 1.6693 (ft/s)

Critical Slope: 0.0469 (ft/ft)

Critical Top Width: 0.6923 (ft)

Calculated Max Shear Stress: 1.6734 (lb/ft^2)

Calculated Avg Shear Stress: 0.7484 (lb/ft^2)

Channel Analysis: DD-8b

Notes:

Input Parameters

Channel Type: Triangular

Side Slope 1 (Z1): 2.0000 (ft/ft)

Side Slope 2 (Z2): 2.0000 (ft/ft)

Longitudinal Slope: 0.0781 (ft/ft)

Manning's n: 0.0400

Flow: 3.0100 (cfs)

Result Parameters

Depth: 0.5927 (ft)

Area of Flow: 0.7026 (ft^2)

Wetted Perimeter: 2.6507 (ft)

Average Velocity: 4.2841 (ft/s)

Top Width: 2.3708 (ft)

Froude Number: 1.3868

Critical Depth: 0.6755 (ft)

Critical Velocity: 3.2979 (ft/s)

Critical Slope: 0.0389 (ft/ft)

Critical Top Width: 2.7021 (ft)

Calculated Max Shear Stress: 2.8885 (lb/ft^2)

Calculated Avg Shear Stress: 1.2918 (lb/ft^2)

Channel Analysis: DD-9

Notes:

Input Parameters

Channel Type: Triangular

Side Slope 1 (Z1): 2.0000 (ft/ft)

Side Slope 2 (Z2): 2.0000 (ft/ft)

Longitudinal Slope: 0.1000 (ft/ft)

Manning's n: 0.0350

Flow: 0.0400 (cfs)

Result Parameters

Depth: 0.1065 (ft)

Area of Flow: 0.0227 (ft^2)

Wetted Perimeter: 0.4762 (ft)

Average Velocity: 1.7639 (ft/s)

Top Width: 0.4259 (ft)

Froude Number: 1.3472

Critical Depth: 0.1200 (ft)

Critical Velocity: 1.3897 (ft/s)

Critical Slope: 0.0530 (ft/ft)

Critical Top Width: 0.4799 (ft)

Calculated Max Shear Stress: 0.6644 (lb/ft^2)

Calculated Avg Shear Stress: 0.2971 (lb/ft^2)

Channel Analysis: DC-9

Notes:

Input Parameters

Channel Type: Circular

Pipe Diameter: 1.5000 (ft)

Longitudinal Slope: 0.0460 (ft/ft)

Manning's n: 0.0250

Flow: 0.0700 (cfs)

Result Parameters

Depth: 0.0831 (ft)

Area of Flow: 0.0385 (ft^2)

Wetted Perimeter: 0.7128 (ft)

Average Velocity: 1.8203 (ft/s)

Top Width: 0.6862 (ft)

Froude Number: 1.3551

Critical Depth: 0.0969 (ft)

Critical Velocity: 1.4504 (ft/s)

Critical Slope: 0.0239 (ft/ft)

Critical Top Width: 0.7373 (ft)

Calculated Max Shear Stress: 0.2385 (lb/ft^2)

Calculated Avg Shear Stress: 0.1549 (lb/ft^2)

Channel Analysis: DD-10

Notes:

Input Parameters

Channel Type: Triangular

Side Slope 1 (Z1): 2.0000 (ft/ft)

Side Slope 2 (Z2): 2.0000 (ft/ft)

Longitudinal Slope: 0.0312 (ft/ft)

Manning's n: 0.0350

Flow: 1.3600 (cfs)

Result Parameters

Depth: 0.4971 (ft)

Area of Flow: 0.4942 (ft^2)

Wetted Perimeter: 2.2230 (ft)

Average Velocity: 2.7520 (ft/s)

Top Width: 1.9883 (ft)

Froude Number: 0.9728

Critical Depth: 0.4916 (ft)

Critical Velocity: 2.8134 (ft/s)

Critical Slope: 0.0331 (ft/ft)

Critical Top Width: 1.9665 (ft)

Calculated Max Shear Stress: 0.9678 (lb/ft^2)

Calculated Avg Shear Stress: 0.4328 (lb/ft^2)

Channel Analysis: DC-12

Notes:

Input Parameters

Channel Type: Circular

Pipe Diameter: 1.5000 (ft)

Longitudinal Slope: 0.0400 (ft/ft)

Manning's n: 0.0250

Flow: 2.4900 (cfs)

Result Parameters

Depth: 0.4869 (ft)

Area of Flow: 0.4972 (ft^2)

Wetted Perimeter: 1.8186 (ft)

Average Velocity: 5.0078 (ft/s)

Top Width: 1.4047 (ft)

Froude Number: 1.4833

Critical Depth: 0.5977 (ft)

Critical Velocity: 3.7920 (ft/s)

Critical Slope: 0.0186 (ft/ft)

Critical Top Width: 1.4687 (ft)

Calculated Max Shear Stress: 1.2154 (lb/ft^2)

Calculated Avg Shear Stress: 0.6824 (lb/ft^2)

Channel Analysis: DD-11

Notes:

Input Parameters

Channel Type: Triangular

Side Slope 1 (Z1): 2.0000 (ft/ft)

Side Slope 2 (Z2): 2.0000 (ft/ft)

Longitudinal Slope: 0.0506 (ft/ft)

Manning's n: 0.0350

Flow: 0.5000 (cfs)

Result Parameters

Depth: 0.3120 (ft)

Area of Flow: 0.1946 (ft^2)

Wetted Perimeter: 1.3951 (ft)

Average Velocity: 2.5690 (ft/s)

Top Width: 1.2478 (ft)

Froude Number: 1.1463

Critical Depth: 0.3295 (ft)

Critical Velocity: 2.3031 (ft/s)

Critical Slope: 0.0378 (ft/ft)

Critical Top Width: 1.3179 (ft)

Calculated Max Shear Stress: 0.9850 (lb/ft^2)

Calculated Avg Shear Stress: 0.4405 (lb/ft^2)

Channel Analysis: DD-13a

Notes:

Input Parameters

Channel Type: Triangular

Side Slope 1 (Z1): 2.0000 (ft/ft)

Side Slope 2 (Z2): 2.0000 (ft/ft)

Longitudinal Slope: 0.0253 (ft/ft)

Manning's n: 0.0350

Flow: 1.2600 (cfs)

Result Parameters

Depth: 0.5024 (ft)

Area of Flow: 0.5048 (ft^2)

Wetted Perimeter: 2.2468 (ft)

Average Velocity: 2.4959 (ft/s)

Top Width: 2.0096 (ft)

Froude Number: 0.8776

Critical Depth: 0.4768 (ft)

Critical Velocity: 2.7708 (ft/s)

Critical Slope: 0.0334 (ft/ft)

Critical Top Width: 1.9074 (ft)

Calculated Max Shear Stress: 0.7932 (lb/ft^2)

Calculated Avg Shear Stress: 0.3547 (lb/ft^2)

Channel Analysis: DD-13b

Notes:

Input Parameters

Channel Type: Triangular

Side Slope 1 (Z1): 2.0000 (ft/ft)

Side Slope 2 (Z2): 2.0000 (ft/ft)

Longitudinal Slope: 0.0323 (ft/ft)

Manning's n: 0.0350

Flow: 1.7200 (cfs)

Result Parameters

Depth: 0.5393 (ft)

Area of Flow: 0.5817 (ft^2)

Wetted Perimeter: 2.4119 (ft)

Average Velocity: 2.9566 (ft/s)

Top Width: 2.1573 (ft)

Froude Number: 1.0034

Critical Depth: 0.5401 (ft)

Critical Velocity: 2.9487 (ft/s)

Critical Slope: 0.0321 (ft/ft)

Critical Top Width: 2.1602 (ft)

Calculated Max Shear Stress: 1.0870 (lb/ft^2)

Calculated Avg Shear Stress: 0.4861 (lb/ft^2)

Channel Analysis: DD-13c

Notes:

Input Parameters

Channel Type: Triangular

Side Slope 1 (Z1): 2.0000 (ft/ft)

Side Slope 2 (Z2): 2.0000 (ft/ft)

Longitudinal Slope: 0.0330 (ft/ft)

Manning's n: 0.0350

Flow: 3.1200 (cfs)

Result Parameters

Depth: 0.6716 (ft)

Area of Flow: 0.9020 (ft^2)

Wetted Perimeter: 3.0033 (ft)

Average Velocity: 3.4590 (ft/s)

Top Width: 2.6863 (ft)

Froude Number: 1.0519

Critical Depth: 0.6853 (ft)

Critical Velocity: 3.3217 (ft/s)

Critical Slope: 0.0296 (ft/ft)

Critical Top Width: 2.7412 (ft)

Calculated Max Shear Stress: 1.3829 (lb/ft^2)

Calculated Avg Shear Stress: 0.6184 (lb/ft^2)

Channel Analysis: DD-13d

Notes:

Input Parameters

Channel Type: Triangular

Side Slope 1 (Z1): 2.0000 (ft/ft)

Side Slope 2 (Z2): 2.0000 (ft/ft)

Longitudinal Slope: 0.0125 (ft/ft)

Manning's n: 0.0350

Flow: 3.5800 (cfs)

Result Parameters

Depth: 0.8483 (ft)

Area of Flow: 1.4392 (ft^2)

Wetted Perimeter: 3.7936 (ft)

Average Velocity: 2.4876 (ft/s)

Top Width: 3.3931 (ft)

Froude Number: 0.6731

Critical Depth: 0.7241 (ft)

Critical Velocity: 3.4143 (ft/s)

Critical Slope: 0.0291 (ft/ft)

Critical Top Width: 2.8962 (ft)

Calculated Max Shear Stress: 0.6617 (lb/ft^2)

Calculated Avg Shear Stress: 0.2959 (lb/ft^2)

Channel Analysis: DC-13

Notes:

Input Parameters

Channel Type: Circular

Pipe Diameter: 2.0000 (ft)

Longitudinal Slope: 0.0333 (ft/ft)

Manning's n: 0.0250

Flow: 6.8700 (cfs)

Result Parameters

Depth: 0.7778 (ft)

Area of Flow: 1.1301 (ft^2)

Wetted Perimeter: 2.6935 (ft)

Average Velocity: 6.0791 (ft/s)

Top Width: 1.9500 (ft)

Froude Number: 1.4073

Critical Depth: 0.9297 (ft)

Critical Velocity: 4.8032 (ft/s)

Critical Slope: 0.0175 (ft/ft)

Critical Top Width: 1.9951 (ft)

Calculated Max Shear Stress: 1.6162 (lb/ft^2)

Calculated Avg Shear Stress: 0.8718 (lb/ft^2)

Channel Analysis: DD-13e

Notes:

Input Parameters

Channel Type: Triangular

Side Slope 1 (Z1): 2.0000 (ft/ft)

Side Slope 2 (Z2): 2.0000 (ft/ft)

Longitudinal Slope: 0.0478 (ft/ft)

Manning's n: 0.0350

Flow: 3.7700 (cfs)

Result Parameters

Depth: 0.6726 (ft)

Area of Flow: 0.9047 (ft^2)

Wetted Perimeter: 3.0078 (ft)

Average Velocity: 4.1671 (ft/s)

Top Width: 2.6903 (ft)

Froude Number: 1.2663

Critical Depth: 0.7392 (ft)

Critical Velocity: 3.4498 (ft/s)

Critical Slope: 0.0289 (ft/ft)

Critical Top Width: 2.9568 (ft)

Calculated Max Shear Stress: 2.0061 (lb/ft^2)

Calculated Avg Shear Stress: 0.8972 (lb/ft^2)

Channel Analysis: DD-14a

Notes:

Input Parameters

Channel Type: Triangular

Side Slope 1 (Z1): 2.0000 (ft/ft)

Side Slope 2 (Z2): 2.0000 (ft/ft)

Longitudinal Slope: 0.0872 (ft/ft)

Manning's n: 0.0350

Flow: 0.2300 (cfs)

Result Parameters

Depth: 0.2105 (ft)

Area of Flow: 0.0886 (ft^2)

Wetted Perimeter: 0.9415 (ft)

Average Velocity: 2.5947 (ft/s)

Top Width: 0.8421 (ft)

Froude Number: 1.4094

Critical Depth: 0.2415 (ft)

Critical Velocity: 1.9718 (ft/s)

Critical Slope: 0.0419 (ft/ft)

Critical Top Width: 0.9660 (ft)

Calculated Max Shear Stress: 1.1455 (lb/ft^2)

Calculated Avg Shear Stress: 0.5123 (lb/ft^2)

Channel Analysis: DD-14b

Notes:

Input Parameters

Channel Type: Triangular

Side Slope 1 (Z1): 2.0000 (ft/ft)

Side Slope 2 (Z2): 2.0000 (ft/ft)

Longitudinal Slope: 0.0315 (ft/ft)

Manning's n: 0.0350

Flow: 0.5600 (cfs)

Result Parameters

Depth: 0.3557 (ft)

Area of Flow: 0.2531 (ft^2)

Wetted Perimeter: 1.5909 (ft)

Average Velocity: 2.2125 (ft/s)

Top Width: 1.4230 (ft)

Froude Number: 0.9245

Critical Depth: 0.3447 (ft)

Critical Velocity: 2.3559 (ft/s)

Critical Slope: 0.0372 (ft/ft)

Critical Top Width: 1.3790 (ft)

Calculated Max Shear Stress: 0.6993 (lb/ft^2)

Calculated Avg Shear Stress: 0.3127 (lb/ft^2)

Channel Analysis: DC-14

Notes:

Input Parameters

Channel Type: Circular

Pipe Diameter: 1.5000 (ft)

Longitudinal Slope: 0.0333 (ft/ft)

Manning's n: 0.0250

Flow: 1.3400 (cfs)

Result Parameters

Depth: 0.3715 (ft)

Area of Flow: 0.3409 (ft^2)

Wetted Perimeter: 1.5626 (ft)

Average Velocity: 3.9310 (ft/s)

Top Width: 1.2949 (ft)

Froude Number: 1.3502

Critical Depth: 0.4336 (ft)

Critical Velocity: 3.1645 (ft/s)

Critical Slope: 0.0181 (ft/ft)

Critical Top Width: 1.3600 (ft)

Calculated Max Shear Stress: 0.7718 (lb/ft^2)

Calculated Avg Shear Stress: 0.4533 (lb/ft^2)

Channel Analysis: DD-15

Notes:

Input Parameters

Channel Type: Triangular

Side Slope 1 (Z1): 2.0000 (ft/ft)

Side Slope 2 (Z2): 2.0000 (ft/ft)

Longitudinal Slope: 0.0970 (ft/ft)

Manning's n: 0.0350

Flow: 0.7900 (cfs)

Result Parameters

Depth: 0.3278 (ft)

Area of Flow: 0.2149 (ft^2)

Wetted Perimeter: 1.4659 (ft)

Average Velocity: 3.6763 (ft/s)

Top Width: 1.3112 (ft)

Froude Number: 1.6003

Critical Depth: 0.3956 (ft)

Critical Velocity: 2.5238 (ft/s)

Critical Slope: 0.0356 (ft/ft)

Critical Top Width: 1.5825 (ft)

Calculated Max Shear Stress: 1.9840 (lb/ft^2)

Calculated Avg Shear Stress: 0.8873 (lb/ft^2)

Channel Analysis: DC-19

Notes:

Input Parameters

Channel Type: Circular

Pipe Diameter: 1.5000 (ft)

Longitudinal Slope: 0.0250 (ft/ft)

Manning's n: 0.0250

Flow: 1.2800 (cfs)

Result Parameters

Depth: 0.3902 (ft)

Area of Flow: 0.3654 (ft^2)

Wetted Perimeter: 1.6057 (ft)

Average Velocity: 3.5030 (ft/s)

Top Width: 1.3162 (ft)

Froude Number: 1.1716

Critical Depth: 0.4233 (ft)

Critical Velocity: 3.1254 (ft/s)

Critical Slope: 0.0182 (ft/ft)

Critical Top Width: 1.3502 (ft)

Calculated Max Shear Stress: 0.6088 (lb/ft^2)

Calculated Avg Shear Stress: 0.3550 (lb/ft^2)

Channel Analysis: DD-16a

Notes:

Input Parameters

Channel Type: Triangular

Side Slope 1 (Z1): 2.0000 (ft/ft)

Side Slope 2 (Z2): 2.0000 (ft/ft)

Longitudinal Slope: 0.0297 (ft/ft)

Manning's n: 0.0350

Flow: 0.1100 (cfs)

Result Parameters

Depth: 0.1954 (ft)

Area of Flow: 0.0763 (ft^2)

Wetted Perimeter: 0.8738 (ft)

Average Velocity: 1.4408 (ft/s)

Top Width: 0.7815 (ft)

Froude Number: 0.8123

Critical Depth: 0.1798 (ft)

Critical Velocity: 1.7014 (ft/s)

Critical Slope: 0.0463 (ft/ft)

Critical Top Width: 0.7192 (ft)

Calculated Max Shear Stress: 0.3621 (lb/ft^2)

Calculated Avg Shear Stress: 0.1619 (lb/ft^2)

Channel Analysis: DC-15

Notes:

Input Parameters

Channel Type: Circular

Pipe Diameter: 1.2500 (ft)

Longitudinal Slope: 0.0333 (ft/ft)

Manning's n: 0.0250

Flow: 0.1900 (cfs)

Result Parameters

Depth: 0.1510 (ft)

Area of Flow: 0.0842 (ft^2)

Wetted Perimeter: 0.8873 (ft)

Average Velocity: 2.2565 (ft/s)

Top Width: 0.8147 (ft)

Froude Number: 1.2369

Critical Depth: 0.1682 (ft)

Critical Velocity: 1.9282 (ft/s)

Critical Slope: 0.0213 (ft/ft)

Critical Top Width: 0.8530 (ft)

Calculated Max Shear Stress: 0.3137 (lb/ft^2)

Calculated Avg Shear Stress: 0.1972 (lb/ft^2)

Channel Analysis: DD-16b

Notes:

Input Parameters

Channel Type: Triangular

Side Slope 1 (Z1): 2.0000 (ft/ft)

Side Slope 2 (Z2): 2.0000 (ft/ft)

Longitudinal Slope: 0.0606 (ft/ft)

Manning's n: 0.0350

Flow: 0.1700 (cfs)

Result Parameters

Depth: 0.2012 (ft)

Area of Flow: 0.0810 (ft^2)

Wetted Perimeter: 0.9000 (ft)

Average Velocity: 2.0990 (ft/s)

Top Width: 0.8049 (ft)

Froude Number: 1.1661

Critical Depth: 0.2140 (ft)

Critical Velocity: 1.8562 (ft/s)

Critical Slope: 0.0437 (ft/ft)

Critical Top Width: 0.8560 (ft)

Calculated Max Shear Stress: 0.7610 (lb/ft^2)

Calculated Avg Shear Stress: 0.3403 (lb/ft^2)

Channel Analysis: DD-17a

Notes:

Input Parameters

Channel Type: Triangular

Side Slope 1 (Z1): 2.0000 (ft/ft)

Side Slope 2 (Z2): 2.0000 (ft/ft)

Longitudinal Slope: 0.0268 (ft/ft)

Manning's n: 0.0350

Flow: 0.3100 (cfs)

Result Parameters

Depth: 0.2938 (ft)

Area of Flow: 0.1726 (ft^2)

Wetted Perimeter: 1.3137 (ft)

Average Velocity: 1.7962 (ft/s)

Top Width: 1.1750 (ft)

Froude Number: 0.8259

Critical Depth: 0.2721 (ft)

Critical Velocity: 2.0931 (ft/s)

Critical Slope: 0.0403 (ft/ft)

Critical Top Width: 1.0885 (ft)

Calculated Max Shear Stress: 0.4913 (lb/ft^2)

Calculated Avg Shear Stress: 0.2197 (lb/ft^2)

Channel Analysis: DC-16

Notes:

Input Parameters

Channel Type: Circular

Pipe Diameter: 1.2500 (ft)

Longitudinal Slope: 0.0333 (ft/ft)

Manning's n: 0.0250

Flow: 0.5300 (cfs)

Result Parameters

Depth: 0.2484 (ft)

Area of Flow: 0.1732 (ft^2)

Wetted Perimeter: 1.1552 (ft)

Average Velocity: 3.0605 (ft/s)

Top Width: 0.9977 (ft)

Froude Number: 1.2945

Critical Depth: 0.2835 (ft)

Critical Velocity: 2.5354 (ft/s)

Critical Slope: 0.0196 (ft/ft)

Critical Top Width: 1.0469 (ft)

Calculated Max Shear Stress: 0.5163 (lb/ft^2)

Calculated Avg Shear Stress: 0.3115 (lb/ft^2)

Channel Analysis: DD-17b

Notes:

Input Parameters

Channel Type: Triangular

Side Slope 1 (Z1): 2.0000 (ft/ft)

Side Slope 2 (Z2): 2.0000 (ft/ft)

Longitudinal Slope: 0.0412 (ft/ft)

Manning's n: 0.0350

Flow: 0.5300 (cfs)

Result Parameters

Depth: 0.3314 (ft)

Area of Flow: 0.2196 (ft^2)

Wetted Perimeter: 1.4819 (ft)

Average Velocity: 2.4133 (ft/s)

Top Width: 1.3255 (ft)

Froude Number: 1.0448

Critical Depth: 0.3372 (ft)

Critical Velocity: 2.3301 (ft/s)

Critical Slope: 0.0375 (ft/ft)

Critical Top Width: 1.3489 (ft)

Calculated Max Shear Stress: 0.8519 (lb/ft^2)

Calculated Avg Shear Stress: 0.3810 (lb/ft^2)

Channel Analysis: DC-17

Notes:

Input Parameters

Channel Type: Circular

Pipe Diameter: 2.0000 (ft)

Longitudinal Slope: 0.0950 (ft/ft)

Manning's n: 0.0250

Flow: 7.8600 (cfs)

Result Parameters

Depth: 0.6325 (ft)

Area of Flow: 0.8526 (ft^2)

Wetted Perimeter: 2.3889 (ft)

Average Velocity: 9.2184 (ft/s)

Top Width: 1.8600 (ft)

Froude Number: 2.3994

Critical Depth: 0.9971 (ft)

Critical Velocity: 5.0226 (ft/s)

Critical Slope: 0.0180 (ft/ft)

Critical Top Width: 2.0000 (ft)

Calculated Max Shear Stress: 3.7493 (lb/ft^2)

Calculated Avg Shear Stress: 2.1158 (lb/ft^2)

Channel Analysis: DD-18a

Notes:

Input Parameters

Channel Type: Triangular

Side Slope 1 (Z1): 2.0000 (ft/ft)

Side Slope 2 (Z2): 2.0000 (ft/ft)

Longitudinal Slope: 0.0286 (ft/ft)

Manning's n: 0.0350

Flow: 0.0600 (cfs)

Result Parameters

Depth: 0.1568 (ft)

Area of Flow: 0.0491 (ft^2)

Wetted Perimeter: 0.7011 (ft)

Average Velocity: 1.2208 (ft/s)

Top Width: 0.6270 (ft)

Froude Number: 0.7684

Critical Depth: 0.1411 (ft)

Critical Velocity: 1.5071 (ft/s)

Critical Slope: 0.0502 (ft/ft)

Critical Top Width: 0.5643 (ft)

Calculated Max Shear Stress: 0.2798 (lb/ft^2)

Calculated Avg Shear Stress: 0.1251 (lb/ft^2)

Channel Analysis: DC-18

Notes:

Input Parameters

Channel Type: Circular

Pipe Diameter: 1.2500 (ft)

Longitudinal Slope: 0.0570 (ft/ft)

Manning's n: 0.0250

Flow: 0.1000 (cfs)

Result Parameters

Depth: 0.0979 (ft)

Area of Flow: 0.0446 (ft^2)

Wetted Perimeter: 0.7091 (ft)

Average Velocity: 2.2433 (ft/s)

Top Width: 0.6717 (ft)

Froude Number: 1.5346

Critical Depth: 0.1215 (ft)

Critical Velocity: 1.6332 (ft/s)

Critical Slope: 0.0229 (ft/ft)

Critical Top Width: 0.7405 (ft)

Calculated Max Shear Stress: 0.3482 (lb/ft^2)

Calculated Avg Shear Stress: 0.2236 (lb/ft^2)

Channel Analysis: DD-18b

Notes:

Input Parameters

Channel Type: Triangular

Side Slope 1 (Z1): 2.0000 (ft/ft)

Side Slope 2 (Z2): 2.0000 (ft/ft)

Longitudinal Slope: 0.0354 (ft/ft)

Manning's n: 0.0350

Flow: 0.3900 (cfs)

Result Parameters

Depth: 0.3039 (ft)

Area of Flow: 0.1847 (ft^2)

Wetted Perimeter: 1.3590 (ft)

Average Velocity: 2.1116 (ft/s)

Top Width: 1.2156 (ft)

Froude Number: 0.9546

Critical Depth: 0.2983 (ft)

Critical Velocity: 2.1915 (ft/s)

Critical Slope: 0.0391 (ft/ft)

Critical Top Width: 1.1932 (ft)

Calculated Max Shear Stress: 0.6713 (lb/ft^2)

Calculated Avg Shear Stress: 0.3002 (lb/ft^2)

Channel Analysis: DD-20

Notes:

Input Parameters

Channel Type: Triangular

Side Slope 1 (Z1): 2.0000 (ft/ft)

Side Slope 2 (Z2): 2.0000 (ft/ft)

Longitudinal Slope: 0.0488 (ft/ft)

Manning's n: 0.0350

Flow: 3.2100 (cfs)

Result Parameters

Depth: 0.6308 (ft)

Area of Flow: 0.7957 (ft^2)

Wetted Perimeter: 2.8208 (ft)

Average Velocity: 4.0341 (ft/s)

Top Width: 2.5230 (ft)

Froude Number: 1.2659

Critical Depth: 0.6931 (ft)

Critical Velocity: 3.3406 (ft/s)

Critical Slope: 0.0295 (ft/ft)

Critical Top Width: 2.7726 (ft)

Calculated Max Shear Stress: 1.9207 (lb/ft^2)

Calculated Avg Shear Stress: 0.8590 (lb/ft^2)

Channel Analysis: DC-26

Notes:

Input Parameters

Channel Type: Circular

Pipe Diameter: 2.0000 (ft)

Longitudinal Slope: 0.0750 (ft/ft)

Manning's n: 0.0150

Flow: 4.8900 (cfs)

Result Parameters

Depth: 0.4078 (ft)

Area of Flow: 0.4599 (ft^2)

Wetted Perimeter: 1.8741 (ft)

Average Velocity: 10.6335 (ft/s)

Top Width: 1.6116 (ft)

Froude Number: 3.5081

Critical Depth: 0.7783 (ft)

Critical Velocity: 4.3232 (ft/s)

Critical Slope: 0.0061 (ft/ft)

Critical Top Width: 1.9502 (ft)

Calculated Max Shear Stress: 1.9086 (lb/ft^2)

Calculated Avg Shear Stress: 1.1484 (lb/ft^2)

Hydraulic Analysis Report

Project Data

Project Title: Project - UEI Lila Canyon - 10yr-24hr flows

Designer:

Project Date: Thursday, October 30, 2014

Project Units: U.S. Customary Units

Notes:

Channel Analysis: DD-1a

Notes:

Input Parameters

Channel Type: Triangular

Side Slope 1 (Z1): 2.0000 (ft/ft)

Side Slope 2 (Z2): 2.0000 (ft/ft)

Longitudinal Slope: 0.1142 (ft/ft)

Manning's n: 0.0350

Flow: 0.5200 (cfs)

Result Parameters

Depth: 0.2718 (ft)

Area of Flow: 0.1477 (ft^2)

Wetted Perimeter: 1.2154 (ft)

Average Velocity: 3.5204 (ft/s)

Top Width: 1.0871 (ft)

Froude Number: 1.6830

Critical Depth: 0.3347 (ft)

Critical Velocity: 2.3213 (ft/s)

Critical Slope: 0.0376 (ft/ft)

Critical Top Width: 1.3387 (ft)

Calculated Max Shear Stress: 1.9366 (lb/ft^2)

Calculated Avg Shear Stress: 0.8661 (lb/ft^2)

Channel Analysis: DD-1b

Notes:

Input Parameters

Channel Type: Trapezoidal

Side Slope 1 (Z1): 2.0000 (ft/ft)

Side Slope 2 (Z2): 2.0000 (ft/ft)

Channel Width: 1.5000 (ft)

Longitudinal Slope: 0.1120 (ft/ft)

Manning's n: 0.0400

Flow: 1.3100 (cfs)

Result Parameters

Depth: 0.1942 (ft)

Area of Flow: 0.3666 (ft^2)

Wetted Perimeter: 2.3683 (ft)

Average Velocity: 3.5731 (ft/s)

Top Width: 2.2766 (ft)

Froude Number: 1.5691

Critical Depth: 0.2549 (ft)

Critical Velocity: 2.5574 (ft/s)

Critical Slope: 0.0422 (ft/ft)

Critical Top Width: 2.5195 (ft)

Calculated Max Shear Stress: 1.3569 (lb/ft^2)

Calculated Avg Shear Stress: 1.0819 (lb/ft^2)

Channel Analysis: DC-1

Notes:

Input Parameters

Channel Type: Circular

Pipe Diameter: 1.5000 (ft)

Longitudinal Slope: 0.1333 (ft/ft)

Manning's n: 0.0250

Flow: 2.8500 (cfs)

Result Parameters

Depth: 0.3831 (ft)

Area of Flow: 0.3561 (ft^2)

Wetted Perimeter: 1.5895 (ft)

Average Velocity: 8.0042 (ft/s)

Top Width: 1.3083 (ft)

Froude Number: 2.7038

Critical Depth: 0.6409 (ft)

Critical Velocity: 3.9558 (ft/s)

Critical Slope: 0.0189 (ft/ft)

Critical Top Width: 1.4840 (ft)

Calculated Max Shear Stress: 3.1867 (lb/ft^2)

Calculated Avg Shear Stress: 1.8633 (lb/ft^2)

Channel Analysis: DC-2

Notes:

Input Parameters

Channel Type: Circular

Pipe Diameter: 1.5000 (ft)

Longitudinal Slope: 0.1077 (ft/ft)

Manning's n: 0.0250

Flow: 3.3700 (cfs)

Result Parameters

Depth: 0.4406 (ft)

Area of Flow: 0.4330 (ft^2)

Wetted Perimeter: 1.7184 (ft)

Average Velocity: 7.7824 (ft/s)

Top Width: 1.3664 (ft)

Froude Number: 2.4362

Critical Depth: 0.6995 (ft)

Critical Velocity: 4.1717 (ft/s)

Critical Slope: 0.0194 (ft/ft)

Critical Top Width: 1.4966 (ft)

Calculated Max Shear Stress: 2.9612 (lb/ft^2)

Calculated Avg Shear Stress: 1.6935 (lb/ft^2)

Channel Analysis: DD-3

Notes:

Input Parameters

Channel Type: Triangular

Side Slope 1 (Z1): 2.0000 (ft/ft)

Side Slope 2 (Z2): 2.0000 (ft/ft)

Longitudinal Slope: 0.0250 (ft/ft)

Manning's n: 0.0350

Flow: 0.1100 (cfs)

Result Parameters

Depth: 0.2018 (ft)

Area of Flow: 0.0814 (ft^2)

Wetted Perimeter: 0.9025 (ft)

Average Velocity: 1.3506 (ft/s)

Top Width: 0.8072 (ft)

Froude Number: 0.7493

Critical Depth: 0.1798 (ft)

Critical Velocity: 1.7014 (ft/s)

Critical Slope: 0.0463 (ft/ft)

Critical Top Width: 0.7192 (ft)

Calculated Max Shear Stress: 0.3148 (lb/ft^2)

Calculated Avg Shear Stress: 0.1408 (lb/ft^2)

Channel Analysis: DC-3

Notes:

Input Parameters

Channel Type: Circular

Pipe Diameter: 1.5000 (ft)

Longitudinal Slope: 0.5000 (ft/ft)

Manning's n: 0.0250

Flow: 0.2100 (cfs)

Result Parameters

Depth: 0.0795 (ft)

Area of Flow: 0.0360 (ft^2)

Wetted Perimeter: 0.6968 (ft)

Average Velocity: 5.8320 (ft/s)

Top Width: 0.6721 (ft)

Froude Number: 4.4400

Critical Depth: 0.1685 (ft)

Critical Velocity: 1.9262 (ft/s)

Critical Slope: 0.0208 (ft/ft)

Critical Top Width: 0.9472 (ft)

Calculated Max Shear Stress: 2.4800 (lb/ft^2)

Calculated Avg Shear Stress: 1.6122 (lb/ft^2)

Channel Analysis: DD-5a

Notes:

Input Parameters

Channel Type: Trapezoidal

Side Slope 1 (Z1): 2.0000 (ft/ft)

Side Slope 2 (Z2): 2.0000 (ft/ft)

Channel Width: 1.5000 (ft)

Longitudinal Slope: 0.1311 (ft/ft)

Manning's n: 0.0450

Flow: 1.8100 (cfs)

Result Parameters

Depth: 0.2374 (ft)

Area of Flow: 0.4689 (ft^2)

Wetted Perimeter: 2.5618 (ft)

Average Velocity: 3.8603 (ft/s)

Top Width: 2.4497 (ft)

Froude Number: 1.5549

Critical Depth: 0.3084 (ft)

Critical Velocity: 2.7725 (ft/s)

Critical Slope: 0.0510 (ft/ft)

Critical Top Width: 2.7336 (ft)

Calculated Max Shear Stress: 1.9423 (lb/ft^2)

Calculated Avg Shear Stress: 1.4973 (lb/ft^2)

Channel Analysis: DC-20

Notes:

Input Parameters

Channel Type: Circular

Pipe Diameter: 2.0000 (ft)

Longitudinal Slope: 0.0963 (ft/ft)

Manning's n: 0.0250

Flow: 4.3000 (cfs)

Result Parameters

Depth: 0.4635 (ft)

Area of Flow: 0.5517 (ft^2)

Wetted Perimeter: 2.0089 (ft)

Average Velocity: 7.7940 (ft/s)

Top Width: 1.6878 (ft)

Froude Number: 2.4024

Critical Depth: 0.7285 (ft)

Critical Velocity: 4.1563 (ft/s)

Critical Slope: 0.0166 (ft/ft)

Critical Top Width: 1.9249 (ft)

Calculated Max Shear Stress: 2.7850 (lb/ft^2)

Calculated Avg Shear Stress: 1.6502 (lb/ft^2)

Channel Analysis: DD-6a

Notes:

Input Parameters

Channel Type: Triangular

Side Slope 1 (Z1): 2.0000 (ft/ft)

Side Slope 2 (Z2): 2.0000 (ft/ft)

Longitudinal Slope: 0.0640 (ft/ft)

Manning's n: 0.0350

Flow: 0.1200 (cfs)

Result Parameters

Depth: 0.1748 (ft)

Area of Flow: 0.0611 (ft^2)

Wetted Perimeter: 0.7817 (ft)

Average Velocity: 1.9637 (ft/s)

Top Width: 0.6992 (ft)

Froude Number: 1.1706

Critical Depth: 0.1862 (ft)

Critical Velocity: 1.7313 (ft/s)

Critical Slope: 0.0457 (ft/ft)

Critical Top Width: 0.7447 (ft)

Calculated Max Shear Stress: 0.6981 (lb/ft^2)

Calculated Avg Shear Stress: 0.3122 (lb/ft^2)

Channel Analysis: DC-21

Notes:

Input Parameters

Channel Type: Circular

Pipe Diameter: 2.0000 (ft)

Longitudinal Slope: 0.0340 (ft/ft)

Manning's n: 0.0250

Flow: 0.3500 (cfs)

Result Parameters

Depth: 0.1770 (ft)

Area of Flow: 0.1366 (ft^2)

Wetted Perimeter: 1.2081 (ft)

Average Velocity: 2.5625 (ft/s)

Top Width: 1.1360 (ft)

Froude Number: 1.3024

Critical Depth: 0.2021 (ft)

Critical Velocity: 2.1073 (ft/s)

Critical Slope: 0.0194 (ft/ft)

Critical Top Width: 1.2057 (ft)

Calculated Max Shear Stress: 0.3754 (lb/ft^2)

Calculated Avg Shear Stress: 0.2399 (lb/ft^2)

Channel Analysis: DC-22

Notes:

Input Parameters

Channel Type: Circular

Pipe Diameter: 2.0000 (ft)

Longitudinal Slope: 0.2830 (ft/ft)

Manning's n: 0.0250

Flow: 5.8800 (cfs)

Result Parameters

Depth: 0.4142 (ft)

Area of Flow: 0.4702 (ft^2)

Wetted Perimeter: 1.8899 (ft)

Average Velocity: 12.5062 (ft/s)

Top Width: 1.6209 (ft)

Froude Number: 4.0922

Critical Depth: 0.8569 (ft)

Critical Velocity: 4.5736 (ft/s)

Critical Slope: 0.0171 (ft/ft)

Critical Top Width: 1.9794 (ft)

Calculated Max Shear Stress: 7.3144 (lb/ft^2)

Calculated Avg Shear Stress: 4.3933 (lb/ft^2)

Channel Analysis: DC-23

Notes:

Input Parameters

Channel Type: Circular

Pipe Diameter: 2.0000 (ft)

Longitudinal Slope: 0.0779 (ft/ft)

Manning's n: 0.0250

Flow: 6.0900 (cfs)

Result Parameters

Depth: 0.5835 (ft)

Area of Flow: 0.7625 (ft^2)

Wetted Perimeter: 2.2824 (ft)

Average Velocity: 7.9868 (ft/s)

Top Width: 1.8183 (ft)

Froude Number: 2.1734

Critical Depth: 0.8730 (ft)

Critical Velocity: 4.6221 (ft/s)

Critical Slope: 0.0172 (ft/ft)

Critical Top Width: 1.9838 (ft)

Calculated Max Shear Stress: 2.8363 (lb/ft^2)

Calculated Avg Shear Stress: 1.6240 (lb/ft^2)

Channel Analysis: DC-24

Notes:

Input Parameters

Channel Type: Circular

Pipe Diameter: 36.0000 (ft)

Longitudinal Slope: 0.0606 (ft/ft)

Manning's n: 0.0250

Flow: 6.5000 (cfs)

Result Parameters

Depth: 0.2991 (ft)

Area of Flow: 1.3055 (ft^2)

Wetted Perimeter: 6.5722 (ft)

Average Velocity: 4.9789 (ft/s)

Top Width: 6.5357 (ft)

Froude Number: 1.9632

Critical Depth: 0.4191 (ft)

Critical Velocity: 3.0049 (ft/s)

Critical Slope: 0.0141 (ft/ft)

Critical Top Width: 7.7235 (ft)

Calculated Max Shear Stress: 1.1311 (lb/ft^2)

Calculated Avg Shear Stress: 0.7511 (lb/ft^2)

Channel Analysis: DC-4

Notes:

Input Parameters

Channel Type: Circular

Pipe Diameter: 1.2500 (ft)

Longitudinal Slope: 0.1050 (ft/ft)

Manning's n: 0.0250

Flow: 0.1700 (cfs)

Result Parameters

Depth: 0.1089 (ft)

Area of Flow: 0.0521 (ft^2)

Wetted Perimeter: 0.7491 (ft)

Average Velocity: 3.2599 (ft/s)

Top Width: 0.7050 (ft)

Froude Number: 2.1123

Critical Depth: 0.1590 (ft)

Critical Velocity: 1.8719 (ft/s)

Critical Slope: 0.0215 (ft/ft)

Critical Top Width: 0.8330 (ft)

Calculated Max Shear Stress: 0.7135 (lb/ft^2)

Calculated Avg Shear Stress: 0.4561 (lb/ft^2)

Channel Analysis: DD-5b

Notes:

Input Parameters

Channel Type: Triangular

Side Slope 1 (Z1): 2.0000 (ft/ft)

Side Slope 2 (Z2): 2.0000 (ft/ft)

Longitudinal Slope: 0.1050 (ft/ft)

Manning's n: 0.0350

Flow: 0.0900 (cfs)

Result Parameters

Depth: 0.1430 (ft)

Area of Flow: 0.0409 (ft^2)

Wetted Perimeter: 0.6396 (ft)

Average Velocity: 2.2002 (ft/s)

Top Width: 0.5720 (ft)

Froude Number: 1.4500

Critical Depth: 0.1659 (ft)

Critical Velocity: 1.6345 (ft/s)

Critical Slope: 0.0475 (ft/ft)

Critical Top Width: 0.6637 (ft)

Calculated Max Shear Stress: 0.9370 (lb/ft^2)

Calculated Avg Shear Stress: 0.4190 (lb/ft^2)

Channel Analysis: DC-5

Notes:

Input Parameters

Channel Type: Circular

Pipe Diameter: 1.2500 (ft)

Longitudinal Slope: 0.1050 (ft/ft)

Manning's n: 0.0250

Flow: 0.1700 (cfs)

Result Parameters

Depth: 0.1089 (ft)

Area of Flow: 0.0521 (ft^2)

Wetted Perimeter: 0.7491 (ft)

Average Velocity: 3.2599 (ft/s)

Top Width: 0.7050 (ft)

Froude Number: 2.1123

Critical Depth: 0.1590 (ft)

Critical Velocity: 1.8719 (ft/s)

Critical Slope: 0.0215 (ft/ft)

Critical Top Width: 0.8330 (ft)

Calculated Max Shear Stress: 0.7135 (lb/ft^2)

Calculated Avg Shear Stress: 0.4561 (lb/ft^2)

Channel Analysis: DD-5c

Notes:

Input Parameters

Channel Type: Triangular

Side Slope 1 (Z1): 2.0000 (ft/ft)

Side Slope 2 (Z2): 2.0000 (ft/ft)

Longitudinal Slope: 0.1050 (ft/ft)

Manning's n: 0.0350

Flow: 0.0900 (cfs)

Result Parameters

Depth: 0.1430 (ft)

Area of Flow: 0.0409 (ft^2)

Wetted Perimeter: 0.6396 (ft)

Average Velocity: 2.2002 (ft/s)

Top Width: 0.5720 (ft)

Froude Number: 1.4500

Critical Depth: 0.1659 (ft)

Critical Velocity: 1.6345 (ft/s)

Critical Slope: 0.0475 (ft/ft)

Critical Top Width: 0.6637 (ft)

Calculated Max Shear Stress: 0.9370 (lb/ft^2)

Calculated Avg Shear Stress: 0.4190 (lb/ft^2)

Channel Analysis: DC-6

Notes:

Input Parameters

Channel Type: Circular

Pipe Diameter: 1.2500 (ft)

Longitudinal Slope: 0.1050 (ft/ft)

Manning's n: 0.0250

Flow: 0.1700 (cfs)

Result Parameters

Depth: 0.1089 (ft)

Area of Flow: 0.0521 (ft^2)

Wetted Perimeter: 0.7491 (ft)

Average Velocity: 3.2599 (ft/s)

Top Width: 0.7050 (ft)

Froude Number: 2.1123

Critical Depth: 0.1590 (ft)

Critical Velocity: 1.8719 (ft/s)

Critical Slope: 0.0215 (ft/ft)

Critical Top Width: 0.8330 (ft)

Calculated Max Shear Stress: 0.7135 (lb/ft^2)

Calculated Avg Shear Stress: 0.4561 (lb/ft^2)

Channel Analysis: DC-25

Notes:

Input Parameters

Channel Type: Circular

Pipe Diameter: 2.0000 (ft)

Longitudinal Slope: 0.0826 (ft/ft)

Manning's n: 0.0250

Flow: 6.6700 (cfs)

Result Parameters

Depth: 0.6023 (ft)

Area of Flow: 0.7969 (ft^2)

Wetted Perimeter: 2.3236 (ft)

Average Velocity: 8.3702 (ft/s)

Top Width: 1.8350 (ft)

Froude Number: 2.2384

Critical Depth: 0.9150 (ft)

Critical Velocity: 4.7606 (ft/s)

Critical Slope: 0.0175 (ft/ft)

Critical Top Width: 1.9928 (ft)

Calculated Max Shear Stress: 3.1044 (lb/ft^2)

Calculated Avg Shear Stress: 1.7677 (lb/ft^2)

Channel Analysis: DD-6b

Notes:

Input Parameters

Channel Type: Triangular

Side Slope 1 (Z1): 2.0000 (ft/ft)

Side Slope 2 (Z2): 2.0000 (ft/ft)

Longitudinal Slope: 0.0050 (ft/ft)

Manning's n: 0.0350

Flow: 1.6000 (cfs)

Result Parameters

Depth: 0.7447 (ft)

Area of Flow: 1.1092 (ft^2)

Wetted Perimeter: 3.3305 (ft)

Average Velocity: 1.4425 (ft/s)

Top Width: 2.9789 (ft)

Froude Number: 0.4166

Critical Depth: 0.5247 (ft)

Critical Velocity: 2.9064 (ft/s)

Critical Slope: 0.0324 (ft/ft)

Critical Top Width: 2.0986 (ft)

Calculated Max Shear Stress: 0.2324 (lb/ft^2)

Calculated Avg Shear Stress: 0.1039 (lb/ft^2)

Channel Analysis: DD-6c

Notes:

Input Parameters

Channel Type: Triangular

Side Slope 1 (Z1): 2.0000 (ft/ft)

Side Slope 2 (Z2): 2.0000 (ft/ft)

Longitudinal Slope: 0.0338 (ft/ft)

Manning's n: 0.0350

Flow: 1.1800 (cfs)

Result Parameters

Depth: 0.4643 (ft)

Area of Flow: 0.4311 (ft^2)

Wetted Perimeter: 2.0764 (ft)

Average Velocity: 2.7370 (ft/s)

Top Width: 1.8572 (ft)

Froude Number: 1.0011

Critical Depth: 0.4645 (ft)

Critical Velocity: 2.7346 (ft/s)

Critical Slope: 0.0337 (ft/ft)

Critical Top Width: 1.8580 (ft)

Calculated Max Shear Stress: 0.9792 (lb/ft^2)

Calculated Avg Shear Stress: 0.4379 (lb/ft^2)

Channel Analysis: DC-8

Notes:

Input Parameters

Channel Type: Circular

Pipe Diameter: 1.5000 (ft)

Longitudinal Slope: 0.3880 (ft/ft)

Manning's n: 0.0250

Flow: 5.6700 (cfs)

Result Parameters

Depth: 0.4142 (ft)

Area of Flow: 0.3973 (ft^2)

Wetted Perimeter: 1.6599 (ft)

Average Velocity: 14.2724 (ft/s)

Top Width: 1.3413 (ft)

Froude Number: 4.6215

Critical Depth: 0.9185 (ft)

Critical Velocity: 4.9995 (ft/s)

Critical Slope: 0.0224 (ft/ft)

Critical Top Width: 1.4617 (ft)

Calculated Max Shear Stress: 10.0287 (lb/ft^2)

Calculated Avg Shear Stress: 5.7946 (lb/ft^2)

Channel Analysis: DD-7

Notes:

Input Parameters

Channel Type: Triangular

Side Slope 1 (Z1): 2.0000 (ft/ft)

Side Slope 2 (Z2): 2.0000 (ft/ft)

Longitudinal Slope: 0.0108 (ft/ft)

Manning's n: 0.0350

Flow: 2.5500 (cfs)

Result Parameters

Depth: 0.7677 (ft)

Area of Flow: 1.1787 (ft^2)

Wetted Perimeter: 3.4332 (ft)

Average Velocity: 2.1634 (ft/s)

Top Width: 3.0708 (ft)

Froude Number: 0.6154

Critical Depth: 0.6322 (ft)

Critical Velocity: 3.1903 (ft/s)

Critical Slope: 0.0304 (ft/ft)

Critical Top Width: 2.5287 (ft)

Calculated Max Shear Stress: 0.5174 (lb/ft^2)

Calculated Avg Shear Stress: 0.2314 (lb/ft^2)

Channel Analysis: DC-7

Notes:

Input Parameters

Channel Type: Circular

Pipe Diameter: 1.5000 (ft)

Longitudinal Slope: 0.4640 (ft/ft)

Manning's n: 0.0250

Flow: 4.5200 (cfs)

Result Parameters

Depth: 0.3530 (ft)

Area of Flow: 0.3172 (ft^2)

Wetted Perimeter: 1.5195 (ft)

Average Velocity: 14.2492 (ft/s)

Top Width: 1.2726 (ft)

Froude Number: 5.0297

Critical Depth: 0.8159 (ft)

Critical Velocity: 4.6013 (ft/s)

Critical Slope: 0.0207 (ft/ft)

Critical Top Width: 1.4942 (ft)

Calculated Max Shear Stress: 10.2211 (lb/ft^2)

Calculated Avg Shear Stress: 6.0443 (lb/ft^2)

Channel Analysis: DD-8a

Notes:

Input Parameters

Channel Type: Triangular

Side Slope 1 (Z1): 2.0000 (ft/ft)

Side Slope 2 (Z2): 2.0000 (ft/ft)

Longitudinal Slope: 0.2042 (ft/ft)

Manning's n: 0.0350

Flow: 0.1000 (cfs)

Result Parameters

Depth: 0.1313 (ft)

Area of Flow: 0.0345 (ft^2)

Wetted Perimeter: 0.5873 (ft)

Average Velocity: 2.8989 (ft/s)

Top Width: 0.5253 (ft)

Froude Number: 1.9936

Critical Depth: 0.1731 (ft)

Critical Velocity: 1.6693 (ft/s)

Critical Slope: 0.0469 (ft/ft)

Critical Top Width: 0.6923 (ft)

Calculated Max Shear Stress: 1.6734 (lb/ft^2)

Calculated Avg Shear Stress: 0.7484 (lb/ft^2)

Channel Analysis: DD-8b

Notes:

Input Parameters

Channel Type: Triangular

Side Slope 1 (Z1): 2.0000 (ft/ft)

Side Slope 2 (Z2): 2.0000 (ft/ft)

Longitudinal Slope: 0.0781 (ft/ft)

Manning's n: 0.0400

Flow: 3.0100 (cfs)

Result Parameters

Depth: 0.5927 (ft)

Area of Flow: 0.7026 (ft^2)

Wetted Perimeter: 2.6507 (ft)

Average Velocity: 4.2841 (ft/s)

Top Width: 2.3708 (ft)

Froude Number: 1.3868

Critical Depth: 0.6755 (ft)

Critical Velocity: 3.2979 (ft/s)

Critical Slope: 0.0389 (ft/ft)

Critical Top Width: 2.7021 (ft)

Calculated Max Shear Stress: 2.8885 (lb/ft^2)

Calculated Avg Shear Stress: 1.2918 (lb/ft^2)

Channel Analysis: DD-9

Notes:

Input Parameters

Channel Type: Triangular

Side Slope 1 (Z1): 2.0000 (ft/ft)

Side Slope 2 (Z2): 2.0000 (ft/ft)

Longitudinal Slope: 0.1000 (ft/ft)

Manning's n: 0.0350

Flow: 0.0400 (cfs)

Result Parameters

Depth: 0.1065 (ft)

Area of Flow: 0.0227 (ft^2)

Wetted Perimeter: 0.4762 (ft)

Average Velocity: 1.7639 (ft/s)

Top Width: 0.4259 (ft)

Froude Number: 1.3472

Critical Depth: 0.1200 (ft)

Critical Velocity: 1.3897 (ft/s)

Critical Slope: 0.0530 (ft/ft)

Critical Top Width: 0.4799 (ft)

Calculated Max Shear Stress: 0.6644 (lb/ft^2)

Calculated Avg Shear Stress: 0.2971 (lb/ft^2)

Channel Analysis: DC-9

Notes:

Input Parameters

Channel Type: Circular

Pipe Diameter: 1.5000 (ft)

Longitudinal Slope: 0.0460 (ft/ft)

Manning's n: 0.0250

Flow: 0.0700 (cfs)

Result Parameters

Depth: 0.0831 (ft)

Area of Flow: 0.0385 (ft^2)

Wetted Perimeter: 0.7128 (ft)

Average Velocity: 1.8203 (ft/s)

Top Width: 0.6862 (ft)

Froude Number: 1.3551

Critical Depth: 0.0969 (ft)

Critical Velocity: 1.4504 (ft/s)

Critical Slope: 0.0239 (ft/ft)

Critical Top Width: 0.7373 (ft)

Calculated Max Shear Stress: 0.2385 (lb/ft^2)

Calculated Avg Shear Stress: 0.1549 (lb/ft^2)

Channel Analysis: DD-10

Notes:

Input Parameters

Channel Type: Triangular

Side Slope 1 (Z1): 2.0000 (ft/ft)

Side Slope 2 (Z2): 2.0000 (ft/ft)

Longitudinal Slope: 0.0312 (ft/ft)

Manning's n: 0.0350

Flow: 1.3600 (cfs)

Result Parameters

Depth: 0.4971 (ft)

Area of Flow: 0.4942 (ft^2)

Wetted Perimeter: 2.2230 (ft)

Average Velocity: 2.7520 (ft/s)

Top Width: 1.9883 (ft)

Froude Number: 0.9728

Critical Depth: 0.4916 (ft)

Critical Velocity: 2.8134 (ft/s)

Critical Slope: 0.0331 (ft/ft)

Critical Top Width: 1.9665 (ft)

Calculated Max Shear Stress: 0.9678 (lb/ft^2)

Calculated Avg Shear Stress: 0.4328 (lb/ft^2)

Channel Analysis: DC-12

Notes:

Input Parameters

Channel Type: Circular

Pipe Diameter: 1.5000 (ft)

Longitudinal Slope: 0.0400 (ft/ft)

Manning's n: 0.0250

Flow: 2.4900 (cfs)

Result Parameters

Depth: 0.4869 (ft)

Area of Flow: 0.4972 (ft^2)

Wetted Perimeter: 1.8186 (ft)

Average Velocity: 5.0078 (ft/s)

Top Width: 1.4047 (ft)

Froude Number: 1.4833

Critical Depth: 0.5977 (ft)

Critical Velocity: 3.7920 (ft/s)

Critical Slope: 0.0186 (ft/ft)

Critical Top Width: 1.4687 (ft)

Calculated Max Shear Stress: 1.2154 (lb/ft^2)

Calculated Avg Shear Stress: 0.6824 (lb/ft^2)

Channel Analysis: DD-11

Notes:

Input Parameters

Channel Type: Triangular

Side Slope 1 (Z1): 2.0000 (ft/ft)

Side Slope 2 (Z2): 2.0000 (ft/ft)

Longitudinal Slope: 0.0506 (ft/ft)

Manning's n: 0.0350

Flow: 0.5000 (cfs)

Result Parameters

Depth: 0.3120 (ft)

Area of Flow: 0.1946 (ft^2)

Wetted Perimeter: 1.3951 (ft)

Average Velocity: 2.5690 (ft/s)

Top Width: 1.2478 (ft)

Froude Number: 1.1463

Critical Depth: 0.3295 (ft)

Critical Velocity: 2.3031 (ft/s)

Critical Slope: 0.0378 (ft/ft)

Critical Top Width: 1.3179 (ft)

Calculated Max Shear Stress: 0.9850 (lb/ft^2)

Calculated Avg Shear Stress: 0.4405 (lb/ft^2)

Channel Analysis: DD-13a

Notes:

Input Parameters

Channel Type: Triangular

Side Slope 1 (Z1): 2.0000 (ft/ft)

Side Slope 2 (Z2): 2.0000 (ft/ft)

Longitudinal Slope: 0.0253 (ft/ft)

Manning's n: 0.0350

Flow: 1.2600 (cfs)

Result Parameters

Depth: 0.5024 (ft)

Area of Flow: 0.5048 (ft^2)

Wetted Perimeter: 2.2468 (ft)

Average Velocity: 2.4959 (ft/s)

Top Width: 2.0096 (ft)

Froude Number: 0.8776

Critical Depth: 0.4768 (ft)

Critical Velocity: 2.7708 (ft/s)

Critical Slope: 0.0334 (ft/ft)

Critical Top Width: 1.9074 (ft)

Calculated Max Shear Stress: 0.7932 (lb/ft^2)

Calculated Avg Shear Stress: 0.3547 (lb/ft^2)

Channel Analysis: DD-13b

Notes:

Input Parameters

Channel Type: Triangular

Side Slope 1 (Z1): 2.0000 (ft/ft)

Side Slope 2 (Z2): 2.0000 (ft/ft)

Longitudinal Slope: 0.0323 (ft/ft)

Manning's n: 0.0350

Flow: 1.7200 (cfs)

Result Parameters

Depth: 0.5393 (ft)

Area of Flow: 0.5817 (ft^2)

Wetted Perimeter: 2.4119 (ft)

Average Velocity: 2.9566 (ft/s)

Top Width: 2.1573 (ft)

Froude Number: 1.0034

Critical Depth: 0.5401 (ft)

Critical Velocity: 2.9487 (ft/s)

Critical Slope: 0.0321 (ft/ft)

Critical Top Width: 2.1602 (ft)

Calculated Max Shear Stress: 1.0870 (lb/ft^2)

Calculated Avg Shear Stress: 0.4861 (lb/ft^2)

Channel Analysis: DD-13c

Notes:

Input Parameters

Channel Type: Triangular

Side Slope 1 (Z1): 2.0000 (ft/ft)

Side Slope 2 (Z2): 2.0000 (ft/ft)

Longitudinal Slope: 0.0330 (ft/ft)

Manning's n: 0.0350

Flow: 3.1200 (cfs)

Result Parameters

Depth: 0.6716 (ft)

Area of Flow: 0.9020 (ft^2)

Wetted Perimeter: 3.0033 (ft)

Average Velocity: 3.4590 (ft/s)

Top Width: 2.6863 (ft)

Froude Number: 1.0519

Critical Depth: 0.6853 (ft)

Critical Velocity: 3.3217 (ft/s)

Critical Slope: 0.0296 (ft/ft)

Critical Top Width: 2.7412 (ft)

Calculated Max Shear Stress: 1.3829 (lb/ft^2)

Calculated Avg Shear Stress: 0.6184 (lb/ft^2)

Channel Analysis: DD-13d

Notes:

Input Parameters

Channel Type: Triangular

Side Slope 1 (Z1): 2.0000 (ft/ft)

Side Slope 2 (Z2): 2.0000 (ft/ft)

Longitudinal Slope: 0.0125 (ft/ft)

Manning's n: 0.0350

Flow: 3.5800 (cfs)

Result Parameters

Depth: 0.8483 (ft)

Area of Flow: 1.4392 (ft^2)

Wetted Perimeter: 3.7936 (ft)

Average Velocity: 2.4876 (ft/s)

Top Width: 3.3931 (ft)

Froude Number: 0.6731

Critical Depth: 0.7241 (ft)

Critical Velocity: 3.4143 (ft/s)

Critical Slope: 0.0291 (ft/ft)

Critical Top Width: 2.8962 (ft)

Calculated Max Shear Stress: 0.6617 (lb/ft^2)

Calculated Avg Shear Stress: 0.2959 (lb/ft^2)

Channel Analysis: DC-13

Notes:

Input Parameters

Channel Type: Circular

Pipe Diameter: 2.0000 (ft)

Longitudinal Slope: 0.0333 (ft/ft)

Manning's n: 0.0250

Flow: 6.8700 (cfs)

Result Parameters

Depth: 0.7778 (ft)

Area of Flow: 1.1301 (ft^2)

Wetted Perimeter: 2.6935 (ft)

Average Velocity: 6.0791 (ft/s)

Top Width: 1.9500 (ft)

Froude Number: 1.4073

Critical Depth: 0.9297 (ft)

Critical Velocity: 4.8032 (ft/s)

Critical Slope: 0.0175 (ft/ft)

Critical Top Width: 1.9951 (ft)

Calculated Max Shear Stress: 1.6162 (lb/ft^2)

Calculated Avg Shear Stress: 0.8718 (lb/ft^2)

Channel Analysis: DD-13e

Notes:

Input Parameters

Channel Type: Triangular

Side Slope 1 (Z1): 2.0000 (ft/ft)

Side Slope 2 (Z2): 2.0000 (ft/ft)

Longitudinal Slope: 0.0478 (ft/ft)

Manning's n: 0.0350

Flow: 3.7700 (cfs)

Result Parameters

Depth: 0.6726 (ft)

Area of Flow: 0.9047 (ft^2)

Wetted Perimeter: 3.0078 (ft)

Average Velocity: 4.1671 (ft/s)

Top Width: 2.6903 (ft)

Froude Number: 1.2663

Critical Depth: 0.7392 (ft)

Critical Velocity: 3.4498 (ft/s)

Critical Slope: 0.0289 (ft/ft)

Critical Top Width: 2.9568 (ft)

Calculated Max Shear Stress: 2.0061 (lb/ft^2)

Calculated Avg Shear Stress: 0.8972 (lb/ft^2)

Channel Analysis: DD-14a

Notes:

Input Parameters

Channel Type: Triangular

Side Slope 1 (Z1): 2.0000 (ft/ft)

Side Slope 2 (Z2): 2.0000 (ft/ft)

Longitudinal Slope: 0.0872 (ft/ft)

Manning's n: 0.0350

Flow: 0.2300 (cfs)

Result Parameters

Depth: 0.2105 (ft)

Area of Flow: 0.0886 (ft^2)

Wetted Perimeter: 0.9415 (ft)

Average Velocity: 2.5947 (ft/s)

Top Width: 0.8421 (ft)

Froude Number: 1.4094

Critical Depth: 0.2415 (ft)

Critical Velocity: 1.9718 (ft/s)

Critical Slope: 0.0419 (ft/ft)

Critical Top Width: 0.9660 (ft)

Calculated Max Shear Stress: 1.1455 (lb/ft^2)

Calculated Avg Shear Stress: 0.5123 (lb/ft^2)

Channel Analysis: DD-14b

Notes:

Input Parameters

Channel Type: Triangular

Side Slope 1 (Z1): 2.0000 (ft/ft)

Side Slope 2 (Z2): 2.0000 (ft/ft)

Longitudinal Slope: 0.0315 (ft/ft)

Manning's n: 0.0350

Flow: 0.5600 (cfs)

Result Parameters

Depth: 0.3557 (ft)

Area of Flow: 0.2531 (ft^2)

Wetted Perimeter: 1.5909 (ft)

Average Velocity: 2.2125 (ft/s)

Top Width: 1.4230 (ft)

Froude Number: 0.9245

Critical Depth: 0.3447 (ft)

Critical Velocity: 2.3559 (ft/s)

Critical Slope: 0.0372 (ft/ft)

Critical Top Width: 1.3790 (ft)

Calculated Max Shear Stress: 0.6993 (lb/ft^2)

Calculated Avg Shear Stress: 0.3127 (lb/ft^2)

Channel Analysis: DC-14

Notes:

Input Parameters

Channel Type: Circular

Pipe Diameter: 1.5000 (ft)

Longitudinal Slope: 0.0333 (ft/ft)

Manning's n: 0.0250

Flow: 1.3400 (cfs)

Result Parameters

Depth: 0.3715 (ft)

Area of Flow: 0.3409 (ft^2)

Wetted Perimeter: 1.5626 (ft)

Average Velocity: 3.9310 (ft/s)

Top Width: 1.2949 (ft)

Froude Number: 1.3502

Critical Depth: 0.4336 (ft)

Critical Velocity: 3.1645 (ft/s)

Critical Slope: 0.0181 (ft/ft)

Critical Top Width: 1.3600 (ft)

Calculated Max Shear Stress: 0.7718 (lb/ft^2)

Calculated Avg Shear Stress: 0.4533 (lb/ft^2)

Channel Analysis: DD-15

Notes:

Input Parameters

Channel Type: Triangular

Side Slope 1 (Z1): 2.0000 (ft/ft)

Side Slope 2 (Z2): 2.0000 (ft/ft)

Longitudinal Slope: 0.0970 (ft/ft)

Manning's n: 0.0350

Flow: 0.7900 (cfs)

Result Parameters

Depth: 0.3278 (ft)

Area of Flow: 0.2149 (ft^2)

Wetted Perimeter: 1.4659 (ft)

Average Velocity: 3.6763 (ft/s)

Top Width: 1.3112 (ft)

Froude Number: 1.6003

Critical Depth: 0.3956 (ft)

Critical Velocity: 2.5238 (ft/s)

Critical Slope: 0.0356 (ft/ft)

Critical Top Width: 1.5825 (ft)

Calculated Max Shear Stress: 1.9840 (lb/ft^2)

Calculated Avg Shear Stress: 0.8873 (lb/ft^2)

Channel Analysis: DC-19

Notes:

Input Parameters

Channel Type: Circular

Pipe Diameter: 1.5000 (ft)

Longitudinal Slope: 0.0250 (ft/ft)

Manning's n: 0.0250

Flow: 1.2800 (cfs)

Result Parameters

Depth: 0.3902 (ft)

Area of Flow: 0.3654 (ft^2)

Wetted Perimeter: 1.6057 (ft)

Average Velocity: 3.5030 (ft/s)

Top Width: 1.3162 (ft)

Froude Number: 1.1716

Critical Depth: 0.4233 (ft)

Critical Velocity: 3.1254 (ft/s)

Critical Slope: 0.0182 (ft/ft)

Critical Top Width: 1.3502 (ft)

Calculated Max Shear Stress: 0.6088 (lb/ft^2)

Calculated Avg Shear Stress: 0.3550 (lb/ft^2)

Channel Analysis: DD-16a

Notes:

Input Parameters

Channel Type: Triangular

Side Slope 1 (Z1): 2.0000 (ft/ft)

Side Slope 2 (Z2): 2.0000 (ft/ft)

Longitudinal Slope: 0.0297 (ft/ft)

Manning's n: 0.0350

Flow: 0.1100 (cfs)

Result Parameters

Depth: 0.1954 (ft)

Area of Flow: 0.0763 (ft^2)

Wetted Perimeter: 0.8738 (ft)

Average Velocity: 1.4408 (ft/s)

Top Width: 0.7815 (ft)

Froude Number: 0.8123

Critical Depth: 0.1798 (ft)

Critical Velocity: 1.7014 (ft/s)

Critical Slope: 0.0463 (ft/ft)

Critical Top Width: 0.7192 (ft)

Calculated Max Shear Stress: 0.3621 (lb/ft^2)

Calculated Avg Shear Stress: 0.1619 (lb/ft^2)

Channel Analysis: DC-15

Notes:

Input Parameters

Channel Type: Circular

Pipe Diameter: 1.2500 (ft)

Longitudinal Slope: 0.0333 (ft/ft)

Manning's n: 0.0250

Flow: 0.1900 (cfs)

Result Parameters

Depth: 0.1510 (ft)

Area of Flow: 0.0842 (ft^2)

Wetted Perimeter: 0.8873 (ft)

Average Velocity: 2.2565 (ft/s)

Top Width: 0.8147 (ft)

Froude Number: 1.2369

Critical Depth: 0.1682 (ft)

Critical Velocity: 1.9282 (ft/s)

Critical Slope: 0.0213 (ft/ft)

Critical Top Width: 0.8530 (ft)

Calculated Max Shear Stress: 0.3137 (lb/ft^2)

Calculated Avg Shear Stress: 0.1972 (lb/ft^2)

Channel Analysis: DD-16b

Notes:

Input Parameters

Channel Type: Triangular

Side Slope 1 (Z1): 2.0000 (ft/ft)

Side Slope 2 (Z2): 2.0000 (ft/ft)

Longitudinal Slope: 0.0606 (ft/ft)

Manning's n: 0.0350

Flow: 0.1700 (cfs)

Result Parameters

Depth: 0.2012 (ft)

Area of Flow: 0.0810 (ft^2)

Wetted Perimeter: 0.9000 (ft)

Average Velocity: 2.0990 (ft/s)

Top Width: 0.8049 (ft)

Froude Number: 1.1661

Critical Depth: 0.2140 (ft)

Critical Velocity: 1.8562 (ft/s)

Critical Slope: 0.0437 (ft/ft)

Critical Top Width: 0.8560 (ft)

Calculated Max Shear Stress: 0.7610 (lb/ft^2)

Calculated Avg Shear Stress: 0.3403 (lb/ft^2)

Channel Analysis: DD-17a

Notes:

Input Parameters

Channel Type: Triangular

Side Slope 1 (Z1): 2.0000 (ft/ft)

Side Slope 2 (Z2): 2.0000 (ft/ft)

Longitudinal Slope: 0.0268 (ft/ft)

Manning's n: 0.0350

Flow: 0.3100 (cfs)

Result Parameters

Depth: 0.2938 (ft)

Area of Flow: 0.1726 (ft^2)

Wetted Perimeter: 1.3137 (ft)

Average Velocity: 1.7962 (ft/s)

Top Width: 1.1750 (ft)

Froude Number: 0.8259

Critical Depth: 0.2721 (ft)

Critical Velocity: 2.0931 (ft/s)

Critical Slope: 0.0403 (ft/ft)

Critical Top Width: 1.0885 (ft)

Calculated Max Shear Stress: 0.4913 (lb/ft^2)

Calculated Avg Shear Stress: 0.2197 (lb/ft^2)

Channel Analysis: DC-16

Notes:

Input Parameters

Channel Type: Circular

Pipe Diameter: 1.2500 (ft)

Longitudinal Slope: 0.0333 (ft/ft)

Manning's n: 0.0250

Flow: 0.5300 (cfs)

Result Parameters

Depth: 0.2484 (ft)

Area of Flow: 0.1732 (ft^2)

Wetted Perimeter: 1.1552 (ft)

Average Velocity: 3.0605 (ft/s)

Top Width: 0.9977 (ft)

Froude Number: 1.2945

Critical Depth: 0.2835 (ft)

Critical Velocity: 2.5354 (ft/s)

Critical Slope: 0.0196 (ft/ft)

Critical Top Width: 1.0469 (ft)

Calculated Max Shear Stress: 0.5163 (lb/ft^2)

Calculated Avg Shear Stress: 0.3115 (lb/ft^2)

Channel Analysis: DD-17b

Notes:

Input Parameters

Channel Type: Triangular

Side Slope 1 (Z1): 2.0000 (ft/ft)

Side Slope 2 (Z2): 2.0000 (ft/ft)

Longitudinal Slope: 0.0412 (ft/ft)

Manning's n: 0.0350

Flow: 0.5300 (cfs)

Result Parameters

Depth: 0.3314 (ft)

Area of Flow: 0.2196 (ft^2)

Wetted Perimeter: 1.4819 (ft)

Average Velocity: 2.4133 (ft/s)

Top Width: 1.3255 (ft)

Froude Number: 1.0448

Critical Depth: 0.3372 (ft)

Critical Velocity: 2.3301 (ft/s)

Critical Slope: 0.0375 (ft/ft)

Critical Top Width: 1.3489 (ft)

Calculated Max Shear Stress: 0.8519 (lb/ft^2)

Calculated Avg Shear Stress: 0.3810 (lb/ft^2)

Channel Analysis: DC-17

Notes:

Input Parameters

Channel Type: Circular

Pipe Diameter: 2.0000 (ft)

Longitudinal Slope: 0.0950 (ft/ft)

Manning's n: 0.0250

Flow: 7.8600 (cfs)

Result Parameters

Depth: 0.6325 (ft)

Area of Flow: 0.8526 (ft^2)

Wetted Perimeter: 2.3889 (ft)

Average Velocity: 9.2184 (ft/s)

Top Width: 1.8600 (ft)

Froude Number: 2.3994

Critical Depth: 0.9971 (ft)

Critical Velocity: 5.0226 (ft/s)

Critical Slope: 0.0180 (ft/ft)

Critical Top Width: 2.0000 (ft)

Calculated Max Shear Stress: 3.7493 (lb/ft^2)

Calculated Avg Shear Stress: 2.1158 (lb/ft^2)

Channel Analysis: DD-18a

Notes:

Input Parameters

Channel Type: Triangular

Side Slope 1 (Z1): 2.0000 (ft/ft)

Side Slope 2 (Z2): 2.0000 (ft/ft)

Longitudinal Slope: 0.0286 (ft/ft)

Manning's n: 0.0350

Flow: 0.0600 (cfs)

Result Parameters

Depth: 0.1568 (ft)

Area of Flow: 0.0491 (ft^2)

Wetted Perimeter: 0.7011 (ft)

Average Velocity: 1.2208 (ft/s)

Top Width: 0.6270 (ft)

Froude Number: 0.7684

Critical Depth: 0.1411 (ft)

Critical Velocity: 1.5071 (ft/s)

Critical Slope: 0.0502 (ft/ft)

Critical Top Width: 0.5643 (ft)

Calculated Max Shear Stress: 0.2798 (lb/ft^2)

Calculated Avg Shear Stress: 0.1251 (lb/ft^2)

Channel Analysis: DC-18

Notes:

Input Parameters

Channel Type: Circular

Pipe Diameter: 1.2500 (ft)

Longitudinal Slope: 0.0570 (ft/ft)

Manning's n: 0.0250

Flow: 0.1000 (cfs)

Result Parameters

Depth: 0.0979 (ft)

Area of Flow: 0.0446 (ft^2)

Wetted Perimeter: 0.7091 (ft)

Average Velocity: 2.2433 (ft/s)

Top Width: 0.6717 (ft)

Froude Number: 1.5346

Critical Depth: 0.1215 (ft)

Critical Velocity: 1.6332 (ft/s)

Critical Slope: 0.0229 (ft/ft)

Critical Top Width: 0.7405 (ft)

Calculated Max Shear Stress: 0.3482 (lb/ft^2)

Calculated Avg Shear Stress: 0.2236 (lb/ft^2)

Channel Analysis: DD-18b

Notes:

Input Parameters

Channel Type: Triangular

Side Slope 1 (Z1): 2.0000 (ft/ft)

Side Slope 2 (Z2): 2.0000 (ft/ft)

Longitudinal Slope: 0.0354 (ft/ft)

Manning's n: 0.0350

Flow: 0.3900 (cfs)

Result Parameters

Depth: 0.3039 (ft)

Area of Flow: 0.1847 (ft^2)

Wetted Perimeter: 1.3590 (ft)

Average Velocity: 2.1116 (ft/s)

Top Width: 1.2156 (ft)

Froude Number: 0.9546

Critical Depth: 0.2983 (ft)

Critical Velocity: 2.1915 (ft/s)

Critical Slope: 0.0391 (ft/ft)

Critical Top Width: 1.1932 (ft)

Calculated Max Shear Stress: 0.6713 (lb/ft^2)

Calculated Avg Shear Stress: 0.3002 (lb/ft^2)

Channel Analysis: DD-20

Notes:

Input Parameters

Channel Type: Triangular

Side Slope 1 (Z1): 2.0000 (ft/ft)

Side Slope 2 (Z2): 2.0000 (ft/ft)

Longitudinal Slope: 0.0488 (ft/ft)

Manning's n: 0.0350

Flow: 3.2100 (cfs)

Result Parameters

Depth: 0.6308 (ft)

Area of Flow: 0.7957 (ft^2)

Wetted Perimeter: 2.8208 (ft)

Average Velocity: 4.0341 (ft/s)

Top Width: 2.5230 (ft)

Froude Number: 1.2659

Critical Depth: 0.6931 (ft)

Critical Velocity: 3.3406 (ft/s)

Critical Slope: 0.0295 (ft/ft)

Critical Top Width: 2.7726 (ft)

Calculated Max Shear Stress: 1.9207 (lb/ft^2)

Calculated Avg Shear Stress: 0.8590 (lb/ft^2)

Channel Analysis: DC-26

Notes:

Input Parameters

Channel Type: Circular

Pipe Diameter: 2.0000 (ft)

Longitudinal Slope: 0.0750 (ft/ft)

Manning's n: 0.0150

Flow: 4.8900 (cfs)

Result Parameters

Depth: 0.4078 (ft)

Area of Flow: 0.4599 (ft^2)

Wetted Perimeter: 1.8741 (ft)

Average Velocity: 10.6335 (ft/s)

Top Width: 1.6116 (ft)

Froude Number: 3.5081

Critical Depth: 0.7783 (ft)

Critical Velocity: 4.3232 (ft/s)

Critical Slope: 0.0061 (ft/ft)

Critical Top Width: 1.9502 (ft)

Calculated Max Shear Stress: 1.9086 (lb/ft^2)

Calculated Avg Shear Stress: 1.1484 (lb/ft^2)

Channel Analysis: DD-1a

Notes:

Input Parameters

Channel Type: Triangular

Side Slope 1 (Z1): 2.0000 (ft/ft)

Side Slope 2 (Z2): 2.0000 (ft/ft)

Longitudinal Slope: 0.1142 (ft/ft)

Manning's n: 0.0350

Flow: 0.5200 (cfs)

Result Parameters

Depth: 0.2718 (ft)

Area of Flow: 0.1477 (ft^2)

Wetted Perimeter: 1.2154 (ft)

Average Velocity: 3.5204 (ft/s)

Top Width: 1.0871 (ft)

Froude Number: 1.6830

Critical Depth: 0.3347 (ft)

Critical Velocity: 2.3213 (ft/s)

Critical Slope: 0.0376 (ft/ft)

Critical Top Width: 1.3387 (ft)

Calculated Max Shear Stress: 1.9366 (lb/ft^2)

Calculated Avg Shear Stress: 0.8661 (lb/ft^2)

Channel Analysis: DD-1b

Notes:

Input Parameters

Channel Type: Trapezoidal

Side Slope 1 (Z1): 2.0000 (ft/ft)

Side Slope 2 (Z2): 2.0000 (ft/ft)

Channel Width: 1.5000 (ft)

Longitudinal Slope: 0.1120 (ft/ft)

Manning's n: 0.0400

Flow: 1.3100 (cfs)

Result Parameters

Depth: 0.1942 (ft)

Area of Flow: 0.3666 (ft^2)

Wetted Perimeter: 2.3683 (ft)

Average Velocity: 3.5731 (ft/s)

Top Width: 2.2766 (ft)

Froude Number: 1.5691

Critical Depth: 0.2549 (ft)

Critical Velocity: 2.5574 (ft/s)

Critical Slope: 0.0422 (ft/ft)

Critical Top Width: 2.5195 (ft)

Calculated Max Shear Stress: 1.3569 (lb/ft^2)

Calculated Avg Shear Stress: 1.0819 (lb/ft^2)

Channel Analysis: DC-1

Notes:

Input Parameters

Channel Type: Circular

Pipe Diameter: 1.5000 (ft)

Longitudinal Slope: 0.1333 (ft/ft)

Manning's n: 0.0250

Flow: 2.8500 (cfs)

Result Parameters

Depth: 0.3831 (ft)

Area of Flow: 0.3561 (ft^2)

Wetted Perimeter: 1.5895 (ft)

Average Velocity: 8.0042 (ft/s)

Top Width: 1.3083 (ft)

Froude Number: 2.7038

Critical Depth: 0.6409 (ft)

Critical Velocity: 3.9558 (ft/s)

Critical Slope: 0.0189 (ft/ft)

Critical Top Width: 1.4840 (ft)

Calculated Max Shear Stress: 3.1867 (lb/ft^2)

Calculated Avg Shear Stress: 1.8633 (lb/ft^2)

Channel Analysis: DC-2

Notes:

Input Parameters

Channel Type: Circular

Pipe Diameter: 1.5000 (ft)

Longitudinal Slope: 0.1077 (ft/ft)

Manning's n: 0.0250

Flow: 3.3700 (cfs)

Result Parameters

Depth: 0.4406 (ft)

Area of Flow: 0.4330 (ft^2)

Wetted Perimeter: 1.7184 (ft)

Average Velocity: 7.7824 (ft/s)

Top Width: 1.3664 (ft)

Froude Number: 2.4362

Critical Depth: 0.6995 (ft)

Critical Velocity: 4.1717 (ft/s)

Critical Slope: 0.0194 (ft/ft)

Critical Top Width: 1.4966 (ft)

Calculated Max Shear Stress: 2.9612 (lb/ft^2)

Calculated Avg Shear Stress: 1.6935 (lb/ft^2)

Channel Analysis: DD-3

Notes:

Input Parameters

Channel Type: Triangular

Side Slope 1 (Z1): 2.0000 (ft/ft)

Side Slope 2 (Z2): 2.0000 (ft/ft)

Longitudinal Slope: 0.0250 (ft/ft)

Manning's n: 0.0350

Flow: 0.1100 (cfs)

Result Parameters

Depth: 0.2018 (ft)

Area of Flow: 0.0814 (ft^2)

Wetted Perimeter: 0.9025 (ft)

Average Velocity: 1.3506 (ft/s)

Top Width: 0.8072 (ft)

Froude Number: 0.7493

Critical Depth: 0.1798 (ft)

Critical Velocity: 1.7014 (ft/s)

Critical Slope: 0.0463 (ft/ft)

Critical Top Width: 0.7192 (ft)

Calculated Max Shear Stress: 0.3148 (lb/ft^2)

Calculated Avg Shear Stress: 0.1408 (lb/ft^2)

Channel Analysis: DC-3

Notes:

Input Parameters

Channel Type: Circular

Pipe Diameter: 1.5000 (ft)

Longitudinal Slope: 0.5000 (ft/ft)

Manning's n: 0.0250

Flow: 0.2100 (cfs)

Result Parameters

Depth: 0.0795 (ft)

Area of Flow: 0.0360 (ft^2)

Wetted Perimeter: 0.6968 (ft)

Average Velocity: 5.8320 (ft/s)

Top Width: 0.6721 (ft)

Froude Number: 4.4400

Critical Depth: 0.1685 (ft)

Critical Velocity: 1.9262 (ft/s)

Critical Slope: 0.0208 (ft/ft)

Critical Top Width: 0.9472 (ft)

Calculated Max Shear Stress: 2.4800 (lb/ft^2)

Calculated Avg Shear Stress: 1.6122 (lb/ft^2)

Channel Analysis: DD-5a

Notes:

Input Parameters

Channel Type: Trapezoidal

Side Slope 1 (Z1): 2.0000 (ft/ft)

Side Slope 2 (Z2): 2.0000 (ft/ft)

Channel Width: 1.5000 (ft)

Longitudinal Slope: 0.1311 (ft/ft)

Manning's n: 0.0450

Flow: 1.8100 (cfs)

Result Parameters

Depth: 0.2374 (ft)

Area of Flow: 0.4689 (ft^2)

Wetted Perimeter: 2.5618 (ft)

Average Velocity: 3.8603 (ft/s)

Top Width: 2.4497 (ft)

Froude Number: 1.5549

Critical Depth: 0.3084 (ft)

Critical Velocity: 2.7725 (ft/s)

Critical Slope: 0.0510 (ft/ft)

Critical Top Width: 2.7336 (ft)

Calculated Max Shear Stress: 1.9423 (lb/ft^2)

Calculated Avg Shear Stress: 1.4973 (lb/ft^2)

Channel Analysis: DC-20

Notes:

Input Parameters

Channel Type: Circular

Pipe Diameter: 2.0000 (ft)

Longitudinal Slope: 0.0963 (ft/ft)

Manning's n: 0.0250

Flow: 4.3000 (cfs)

Result Parameters

Depth: 0.4635 (ft)

Area of Flow: 0.5517 (ft^2)

Wetted Perimeter: 2.0089 (ft)

Average Velocity: 7.7940 (ft/s)

Top Width: 1.6878 (ft)

Froude Number: 2.4024

Critical Depth: 0.7285 (ft)

Critical Velocity: 4.1563 (ft/s)

Critical Slope: 0.0166 (ft/ft)

Critical Top Width: 1.9249 (ft)

Calculated Max Shear Stress: 2.7850 (lb/ft^2)

Calculated Avg Shear Stress: 1.6502 (lb/ft^2)

Channel Analysis: DD-6a

Notes:

Input Parameters

Channel Type: Triangular

Side Slope 1 (Z1): 2.0000 (ft/ft)

Side Slope 2 (Z2): 2.0000 (ft/ft)

Longitudinal Slope: 0.0640 (ft/ft)

Manning's n: 0.0350

Flow: 0.1200 (cfs)

Result Parameters

Depth: 0.1748 (ft)

Area of Flow: 0.0611 (ft^2)

Wetted Perimeter: 0.7817 (ft)

Average Velocity: 1.9637 (ft/s)

Top Width: 0.6992 (ft)

Froude Number: 1.1706

Critical Depth: 0.1862 (ft)

Critical Velocity: 1.7313 (ft/s)

Critical Slope: 0.0457 (ft/ft)

Critical Top Width: 0.7447 (ft)

Calculated Max Shear Stress: 0.6981 (lb/ft^2)

Calculated Avg Shear Stress: 0.3122 (lb/ft^2)

Channel Analysis: DC-21

Notes:

Input Parameters

Channel Type: Circular

Pipe Diameter: 2.0000 (ft)

Longitudinal Slope: 0.0340 (ft/ft)

Manning's n: 0.0250

Flow: 0.3500 (cfs)

Result Parameters

Depth: 0.1770 (ft)

Area of Flow: 0.1366 (ft^2)

Wetted Perimeter: 1.2081 (ft)

Average Velocity: 2.5625 (ft/s)

Top Width: 1.1360 (ft)

Froude Number: 1.3024

Critical Depth: 0.2021 (ft)

Critical Velocity: 2.1073 (ft/s)

Critical Slope: 0.0194 (ft/ft)

Critical Top Width: 1.2057 (ft)

Calculated Max Shear Stress: 0.3754 (lb/ft^2)

Calculated Avg Shear Stress: 0.2399 (lb/ft^2)

Channel Analysis: DC-22

Notes:

Input Parameters

Channel Type: Circular

Pipe Diameter: 2.0000 (ft)

Longitudinal Slope: 0.2830 (ft/ft)

Manning's n: 0.0250

Flow: 5.8800 (cfs)

Result Parameters

Depth: 0.4142 (ft)

Area of Flow: 0.4702 (ft^2)

Wetted Perimeter: 1.8899 (ft)

Average Velocity: 12.5062 (ft/s)

Top Width: 1.6209 (ft)

Froude Number: 4.0922

Critical Depth: 0.8569 (ft)

Critical Velocity: 4.5736 (ft/s)

Critical Slope: 0.0171 (ft/ft)

Critical Top Width: 1.9794 (ft)

Calculated Max Shear Stress: 7.3144 (lb/ft^2)

Calculated Avg Shear Stress: 4.3933 (lb/ft^2)

Channel Analysis: DC-23

Notes:

Input Parameters

Channel Type: Circular

Pipe Diameter: 2.0000 (ft)

Longitudinal Slope: 0.0779 (ft/ft)

Manning's n: 0.0250

Flow: 6.0900 (cfs)

Result Parameters

Depth: 0.5835 (ft)

Area of Flow: 0.7625 (ft^2)

Wetted Perimeter: 2.2824 (ft)

Average Velocity: 7.9868 (ft/s)

Top Width: 1.8183 (ft)

Froude Number: 2.1734

Critical Depth: 0.8730 (ft)

Critical Velocity: 4.6221 (ft/s)

Critical Slope: 0.0172 (ft/ft)

Critical Top Width: 1.9838 (ft)

Calculated Max Shear Stress: 2.8363 (lb/ft^2)

Calculated Avg Shear Stress: 1.6240 (lb/ft^2)

Channel Analysis: DC-24

Notes:

Input Parameters

Channel Type: Circular

Pipe Diameter: 36.0000 (ft)

Longitudinal Slope: 0.0606 (ft/ft)

Manning's n: 0.0250

Flow: 6.5000 (cfs)

Result Parameters

Depth: 0.2991 (ft)

Area of Flow: 1.3055 (ft^2)

Wetted Perimeter: 6.5722 (ft)

Average Velocity: 4.9789 (ft/s)

Top Width: 6.5357 (ft)

Froude Number: 1.9632

Critical Depth: 0.4191 (ft)

Critical Velocity: 3.0049 (ft/s)

Critical Slope: 0.0141 (ft/ft)

Critical Top Width: 7.7235 (ft)

Calculated Max Shear Stress: 1.1311 (lb/ft^2)

Calculated Avg Shear Stress: 0.7511 (lb/ft^2)

Channel Analysis: DC-4

Notes:

Input Parameters

Channel Type: Circular

Pipe Diameter: 1.2500 (ft)

Longitudinal Slope: 0.1050 (ft/ft)

Manning's n: 0.0250

Flow: 0.1700 (cfs)

Result Parameters

Depth: 0.1089 (ft)

Area of Flow: 0.0521 (ft^2)

Wetted Perimeter: 0.7491 (ft)

Average Velocity: 3.2599 (ft/s)

Top Width: 0.7050 (ft)

Froude Number: 2.1123

Critical Depth: 0.1590 (ft)

Critical Velocity: 1.8719 (ft/s)

Critical Slope: 0.0215 (ft/ft)

Critical Top Width: 0.8330 (ft)

Calculated Max Shear Stress: 0.7135 (lb/ft^2)

Calculated Avg Shear Stress: 0.4561 (lb/ft^2)

Channel Analysis: DD-5b

Notes:

Input Parameters

Channel Type: Triangular

Side Slope 1 (Z1): 2.0000 (ft/ft)

Side Slope 2 (Z2): 2.0000 (ft/ft)

Longitudinal Slope: 0.1050 (ft/ft)

Manning's n: 0.0350

Flow: 0.0900 (cfs)

Result Parameters

Depth: 0.1430 (ft)

Area of Flow: 0.0409 (ft^2)

Wetted Perimeter: 0.6396 (ft)

Average Velocity: 2.2002 (ft/s)

Top Width: 0.5720 (ft)

Froude Number: 1.4500

Critical Depth: 0.1659 (ft)

Critical Velocity: 1.6345 (ft/s)

Critical Slope: 0.0475 (ft/ft)

Critical Top Width: 0.6637 (ft)

Calculated Max Shear Stress: 0.9370 (lb/ft^2)

Calculated Avg Shear Stress: 0.4190 (lb/ft^2)

Channel Analysis: DC-5

Notes:

Input Parameters

Channel Type: Circular

Pipe Diameter: 1.2500 (ft)

Longitudinal Slope: 0.1050 (ft/ft)

Manning's n: 0.0250

Flow: 0.1700 (cfs)

Result Parameters

Depth: 0.1089 (ft)

Area of Flow: 0.0521 (ft^2)

Wetted Perimeter: 0.7491 (ft)

Average Velocity: 3.2599 (ft/s)

Top Width: 0.7050 (ft)

Froude Number: 2.1123

Critical Depth: 0.1590 (ft)

Critical Velocity: 1.8719 (ft/s)

Critical Slope: 0.0215 (ft/ft)

Critical Top Width: 0.8330 (ft)

Calculated Max Shear Stress: 0.7135 (lb/ft^2)

Calculated Avg Shear Stress: 0.4561 (lb/ft^2)

Channel Analysis: DD-5c

Notes:

Input Parameters

Channel Type: Triangular

Side Slope 1 (Z1): 2.0000 (ft/ft)

Side Slope 2 (Z2): 2.0000 (ft/ft)

Longitudinal Slope: 0.1050 (ft/ft)

Manning's n: 0.0350

Flow: 0.0900 (cfs)

Result Parameters

Depth: 0.1430 (ft)

Area of Flow: 0.0409 (ft^2)

Wetted Perimeter: 0.6396 (ft)

Average Velocity: 2.2002 (ft/s)

Top Width: 0.5720 (ft)

Froude Number: 1.4500

Critical Depth: 0.1659 (ft)

Critical Velocity: 1.6345 (ft/s)

Critical Slope: 0.0475 (ft/ft)

Critical Top Width: 0.6637 (ft)

Calculated Max Shear Stress: 0.9370 (lb/ft^2)

Calculated Avg Shear Stress: 0.4190 (lb/ft^2)

Channel Analysis: DC-6

Notes:

Input Parameters

Channel Type: Circular

Pipe Diameter: 1.2500 (ft)

Longitudinal Slope: 0.1050 (ft/ft)

Manning's n: 0.0250

Flow: 0.1700 (cfs)

Result Parameters

Depth: 0.1089 (ft)

Area of Flow: 0.0521 (ft^2)

Wetted Perimeter: 0.7491 (ft)

Average Velocity: 3.2599 (ft/s)

Top Width: 0.7050 (ft)

Froude Number: 2.1123

Critical Depth: 0.1590 (ft)

Critical Velocity: 1.8719 (ft/s)

Critical Slope: 0.0215 (ft/ft)

Critical Top Width: 0.8330 (ft)

Calculated Max Shear Stress: 0.7135 (lb/ft^2)

Calculated Avg Shear Stress: 0.4561 (lb/ft^2)

Channel Analysis: DC-25

Notes:

Input Parameters

Channel Type: Circular

Pipe Diameter: 2.0000 (ft)

Longitudinal Slope: 0.0826 (ft/ft)

Manning's n: 0.0250

Flow: 6.6700 (cfs)

Result Parameters

Depth: 0.6023 (ft)

Area of Flow: 0.7969 (ft^2)

Wetted Perimeter: 2.3236 (ft)

Average Velocity: 8.3702 (ft/s)

Top Width: 1.8350 (ft)

Froude Number: 2.2384

Critical Depth: 0.9150 (ft)

Critical Velocity: 4.7606 (ft/s)

Critical Slope: 0.0175 (ft/ft)

Critical Top Width: 1.9928 (ft)

Calculated Max Shear Stress: 3.1044 (lb/ft^2)

Calculated Avg Shear Stress: 1.7677 (lb/ft^2)

Channel Analysis: DD-6b

Notes:

Input Parameters

Channel Type: Triangular

Side Slope 1 (Z1): 2.0000 (ft/ft)

Side Slope 2 (Z2): 2.0000 (ft/ft)

Longitudinal Slope: 0.0050 (ft/ft)

Manning's n: 0.0350

Flow: 1.6000 (cfs)

Result Parameters

Depth: 0.7447 (ft)

Area of Flow: 1.1092 (ft^2)

Wetted Perimeter: 3.3305 (ft)

Average Velocity: 1.4425 (ft/s)

Top Width: 2.9789 (ft)

Froude Number: 0.4166

Critical Depth: 0.5247 (ft)

Critical Velocity: 2.9064 (ft/s)

Critical Slope: 0.0324 (ft/ft)

Critical Top Width: 2.0986 (ft)

Calculated Max Shear Stress: 0.2324 (lb/ft^2)

Calculated Avg Shear Stress: 0.1039 (lb/ft^2)

Channel Analysis: DD-6c

Notes:

Input Parameters

Channel Type: Triangular

Side Slope 1 (Z1): 2.0000 (ft/ft)

Side Slope 2 (Z2): 2.0000 (ft/ft)

Longitudinal Slope: 0.0338 (ft/ft)

Manning's n: 0.0350

Flow: 1.1800 (cfs)

Result Parameters

Depth: 0.4643 (ft)

Area of Flow: 0.4311 (ft^2)

Wetted Perimeter: 2.0764 (ft)

Average Velocity: 2.7370 (ft/s)

Top Width: 1.8572 (ft)

Froude Number: 1.0011

Critical Depth: 0.4645 (ft)

Critical Velocity: 2.7346 (ft/s)

Critical Slope: 0.0337 (ft/ft)

Critical Top Width: 1.8580 (ft)

Calculated Max Shear Stress: 0.9792 (lb/ft^2)

Calculated Avg Shear Stress: 0.4379 (lb/ft^2)

Channel Analysis: DC-8

Notes:

Input Parameters

Channel Type: Circular

Pipe Diameter: 1.5000 (ft)

Longitudinal Slope: 0.3880 (ft/ft)

Manning's n: 0.0250

Flow: 5.6700 (cfs)

Result Parameters

Depth: 0.4142 (ft)

Area of Flow: 0.3973 (ft^2)

Wetted Perimeter: 1.6599 (ft)

Average Velocity: 14.2724 (ft/s)

Top Width: 1.3413 (ft)

Froude Number: 4.6215

Critical Depth: 0.9185 (ft)

Critical Velocity: 4.9995 (ft/s)

Critical Slope: 0.0224 (ft/ft)

Critical Top Width: 1.4617 (ft)

Calculated Max Shear Stress: 10.0287 (lb/ft^2)

Calculated Avg Shear Stress: 5.7946 (lb/ft^2)

Channel Analysis: DD-7

Notes:

Input Parameters

Channel Type: Triangular

Side Slope 1 (Z1): 2.0000 (ft/ft)

Side Slope 2 (Z2): 2.0000 (ft/ft)

Longitudinal Slope: 0.0108 (ft/ft)

Manning's n: 0.0350

Flow: 2.5500 (cfs)

Result Parameters

Depth: 0.7677 (ft)

Area of Flow: 1.1787 (ft^2)

Wetted Perimeter: 3.4332 (ft)

Average Velocity: 2.1634 (ft/s)

Top Width: 3.0708 (ft)

Froude Number: 0.6154

Critical Depth: 0.6322 (ft)

Critical Velocity: 3.1903 (ft/s)

Critical Slope: 0.0304 (ft/ft)

Critical Top Width: 2.5287 (ft)

Calculated Max Shear Stress: 0.5174 (lb/ft^2)

Calculated Avg Shear Stress: 0.2314 (lb/ft^2)

Channel Analysis: DC-7

Notes:

Input Parameters

Channel Type: Circular

Pipe Diameter: 1.5000 (ft)

Longitudinal Slope: 0.4640 (ft/ft)

Manning's n: 0.0250

Flow: 4.5200 (cfs)

Result Parameters

Depth: 0.3530 (ft)

Area of Flow: 0.3172 (ft^2)

Wetted Perimeter: 1.5195 (ft)

Average Velocity: 14.2492 (ft/s)

Top Width: 1.2726 (ft)

Froude Number: 5.0297

Critical Depth: 0.8159 (ft)

Critical Velocity: 4.6013 (ft/s)

Critical Slope: 0.0207 (ft/ft)

Critical Top Width: 1.4942 (ft)

Calculated Max Shear Stress: 10.2211 (lb/ft^2)

Calculated Avg Shear Stress: 6.0443 (lb/ft^2)

Channel Analysis: DD-8a

Notes:

Input Parameters

Channel Type: Triangular

Side Slope 1 (Z1): 2.0000 (ft/ft)

Side Slope 2 (Z2): 2.0000 (ft/ft)

Longitudinal Slope: 0.2042 (ft/ft)

Manning's n: 0.0350

Flow: 0.1000 (cfs)

Result Parameters

Depth: 0.1313 (ft)

Area of Flow: 0.0345 (ft^2)

Wetted Perimeter: 0.5873 (ft)

Average Velocity: 2.8989 (ft/s)

Top Width: 0.5253 (ft)

Froude Number: 1.9936

Critical Depth: 0.1731 (ft)

Critical Velocity: 1.6693 (ft/s)

Critical Slope: 0.0469 (ft/ft)

Critical Top Width: 0.6923 (ft)

Calculated Max Shear Stress: 1.6734 (lb/ft^2)

Calculated Avg Shear Stress: 0.7484 (lb/ft^2)

Channel Analysis: DD-8b

Notes:

Input Parameters

Channel Type: Triangular

Side Slope 1 (Z1): 2.0000 (ft/ft)

Side Slope 2 (Z2): 2.0000 (ft/ft)

Longitudinal Slope: 0.0781 (ft/ft)

Manning's n: 0.0400

Flow: 3.0100 (cfs)

Result Parameters

Depth: 0.5927 (ft)

Area of Flow: 0.7026 (ft^2)

Wetted Perimeter: 2.6507 (ft)

Average Velocity: 4.2841 (ft/s)

Top Width: 2.3708 (ft)

Froude Number: 1.3868

Critical Depth: 0.6755 (ft)

Critical Velocity: 3.2979 (ft/s)

Critical Slope: 0.0389 (ft/ft)

Critical Top Width: 2.7021 (ft)

Calculated Max Shear Stress: 2.8885 (lb/ft^2)

Calculated Avg Shear Stress: 1.2918 (lb/ft^2)

Channel Analysis: DD-9

Notes:

Input Parameters

Channel Type: Triangular

Side Slope 1 (Z1): 2.0000 (ft/ft)

Side Slope 2 (Z2): 2.0000 (ft/ft)

Longitudinal Slope: 0.1000 (ft/ft)

Manning's n: 0.0350

Flow: 0.0400 (cfs)

Result Parameters

Depth: 0.1065 (ft)

Area of Flow: 0.0227 (ft^2)

Wetted Perimeter: 0.4762 (ft)

Average Velocity: 1.7639 (ft/s)

Top Width: 0.4259 (ft)

Froude Number: 1.3472

Critical Depth: 0.1200 (ft)

Critical Velocity: 1.3897 (ft/s)

Critical Slope: 0.0530 (ft/ft)

Critical Top Width: 0.4799 (ft)

Calculated Max Shear Stress: 0.6644 (lb/ft^2)

Calculated Avg Shear Stress: 0.2971 (lb/ft^2)

Channel Analysis: DC-9

Notes:

Input Parameters

Channel Type: Circular

Pipe Diameter: 1.5000 (ft)

Longitudinal Slope: 0.0460 (ft/ft)

Manning's n: 0.0250

Flow: 0.0700 (cfs)

Result Parameters

Depth: 0.0831 (ft)

Area of Flow: 0.0385 (ft^2)

Wetted Perimeter: 0.7128 (ft)

Average Velocity: 1.8203 (ft/s)

Top Width: 0.6862 (ft)

Froude Number: 1.3551

Critical Depth: 0.0969 (ft)

Critical Velocity: 1.4504 (ft/s)

Critical Slope: 0.0239 (ft/ft)

Critical Top Width: 0.7373 (ft)

Calculated Max Shear Stress: 0.2385 (lb/ft^2)

Calculated Avg Shear Stress: 0.1549 (lb/ft^2)

Channel Analysis: DD-10

Notes:

Input Parameters

Channel Type: Triangular

Side Slope 1 (Z1): 2.0000 (ft/ft)

Side Slope 2 (Z2): 2.0000 (ft/ft)

Longitudinal Slope: 0.0312 (ft/ft)

Manning's n: 0.0350

Flow: 1.3600 (cfs)

Result Parameters

Depth: 0.4971 (ft)

Area of Flow: 0.4942 (ft^2)

Wetted Perimeter: 2.2230 (ft)

Average Velocity: 2.7520 (ft/s)

Top Width: 1.9883 (ft)

Froude Number: 0.9728

Critical Depth: 0.4916 (ft)

Critical Velocity: 2.8134 (ft/s)

Critical Slope: 0.0331 (ft/ft)

Critical Top Width: 1.9665 (ft)

Calculated Max Shear Stress: 0.9678 (lb/ft^2)

Calculated Avg Shear Stress: 0.4328 (lb/ft^2)

Channel Analysis: DC-12

Notes:

Input Parameters

Channel Type: Circular

Pipe Diameter: 1.5000 (ft)

Longitudinal Slope: 0.0400 (ft/ft)

Manning's n: 0.0250

Flow: 2.4900 (cfs)

Result Parameters

Depth: 0.4869 (ft)

Area of Flow: 0.4972 (ft^2)

Wetted Perimeter: 1.8186 (ft)

Average Velocity: 5.0078 (ft/s)

Top Width: 1.4047 (ft)

Froude Number: 1.4833

Critical Depth: 0.5977 (ft)

Critical Velocity: 3.7920 (ft/s)

Critical Slope: 0.0186 (ft/ft)

Critical Top Width: 1.4687 (ft)

Calculated Max Shear Stress: 1.2154 (lb/ft^2)

Calculated Avg Shear Stress: 0.6824 (lb/ft^2)

Channel Analysis: DD-11

Notes:

Input Parameters

Channel Type: Triangular

Side Slope 1 (Z1): 2.0000 (ft/ft)

Side Slope 2 (Z2): 2.0000 (ft/ft)

Longitudinal Slope: 0.0506 (ft/ft)

Manning's n: 0.0350

Flow: 0.5000 (cfs)

Result Parameters

Depth: 0.3120 (ft)

Area of Flow: 0.1946 (ft^2)

Wetted Perimeter: 1.3951 (ft)

Average Velocity: 2.5690 (ft/s)

Top Width: 1.2478 (ft)

Froude Number: 1.1463

Critical Depth: 0.3295 (ft)

Critical Velocity: 2.3031 (ft/s)

Critical Slope: 0.0378 (ft/ft)

Critical Top Width: 1.3179 (ft)

Calculated Max Shear Stress: 0.9850 (lb/ft^2)

Calculated Avg Shear Stress: 0.4405 (lb/ft^2)

Channel Analysis: DD-13a

Notes:

Input Parameters

Channel Type: Triangular

Side Slope 1 (Z1): 2.0000 (ft/ft)

Side Slope 2 (Z2): 2.0000 (ft/ft)

Longitudinal Slope: 0.0253 (ft/ft)

Manning's n: 0.0350

Flow: 1.2600 (cfs)

Result Parameters

Depth: 0.5024 (ft)

Area of Flow: 0.5048 (ft^2)

Wetted Perimeter: 2.2468 (ft)

Average Velocity: 2.4959 (ft/s)

Top Width: 2.0096 (ft)

Froude Number: 0.8776

Critical Depth: 0.4768 (ft)

Critical Velocity: 2.7708 (ft/s)

Critical Slope: 0.0334 (ft/ft)

Critical Top Width: 1.9074 (ft)

Calculated Max Shear Stress: 0.7932 (lb/ft^2)

Calculated Avg Shear Stress: 0.3547 (lb/ft^2)

Channel Analysis: DD-13b

Notes:

Input Parameters

Channel Type: Triangular

Side Slope 1 (Z1): 2.0000 (ft/ft)

Side Slope 2 (Z2): 2.0000 (ft/ft)

Longitudinal Slope: 0.0323 (ft/ft)

Manning's n: 0.0350

Flow: 1.7200 (cfs)

Result Parameters

Depth: 0.5393 (ft)

Area of Flow: 0.5817 (ft^2)

Wetted Perimeter: 2.4119 (ft)

Average Velocity: 2.9566 (ft/s)

Top Width: 2.1573 (ft)

Froude Number: 1.0034

Critical Depth: 0.5401 (ft)

Critical Velocity: 2.9487 (ft/s)

Critical Slope: 0.0321 (ft/ft)

Critical Top Width: 2.1602 (ft)

Calculated Max Shear Stress: 1.0870 (lb/ft^2)

Calculated Avg Shear Stress: 0.4861 (lb/ft^2)

Channel Analysis: DD-13c

Notes:

Input Parameters

Channel Type: Triangular

Side Slope 1 (Z1): 2.0000 (ft/ft)

Side Slope 2 (Z2): 2.0000 (ft/ft)

Longitudinal Slope: 0.0330 (ft/ft)

Manning's n: 0.0350

Flow: 3.1200 (cfs)

Result Parameters

Depth: 0.6716 (ft)

Area of Flow: 0.9020 (ft^2)

Wetted Perimeter: 3.0033 (ft)

Average Velocity: 3.4590 (ft/s)

Top Width: 2.6863 (ft)

Froude Number: 1.0519

Critical Depth: 0.6853 (ft)

Critical Velocity: 3.3217 (ft/s)

Critical Slope: 0.0296 (ft/ft)

Critical Top Width: 2.7412 (ft)

Calculated Max Shear Stress: 1.3829 (lb/ft^2)

Calculated Avg Shear Stress: 0.6184 (lb/ft^2)

Channel Analysis: DD-13d

Notes:

Input Parameters

Channel Type: Triangular

Side Slope 1 (Z1): 2.0000 (ft/ft)

Side Slope 2 (Z2): 2.0000 (ft/ft)

Longitudinal Slope: 0.0125 (ft/ft)

Manning's n: 0.0350

Flow: 3.5800 (cfs)

Result Parameters

Depth: 0.8483 (ft)

Area of Flow: 1.4392 (ft^2)

Wetted Perimeter: 3.7936 (ft)

Average Velocity: 2.4876 (ft/s)

Top Width: 3.3931 (ft)

Froude Number: 0.6731

Critical Depth: 0.7241 (ft)

Critical Velocity: 3.4143 (ft/s)

Critical Slope: 0.0291 (ft/ft)

Critical Top Width: 2.8962 (ft)

Calculated Max Shear Stress: 0.6617 (lb/ft^2)

Calculated Avg Shear Stress: 0.2959 (lb/ft^2)

Channel Analysis: DC-13

Notes:

Input Parameters

Channel Type: Circular

Pipe Diameter: 2.0000 (ft)

Longitudinal Slope: 0.0333 (ft/ft)

Manning's n: 0.0250

Flow: 6.8700 (cfs)

Result Parameters

Depth: 0.7778 (ft)

Area of Flow: 1.1301 (ft^2)

Wetted Perimeter: 2.6935 (ft)

Average Velocity: 6.0791 (ft/s)

Top Width: 1.9500 (ft)

Froude Number: 1.4073

Critical Depth: 0.9297 (ft)

Critical Velocity: 4.8032 (ft/s)

Critical Slope: 0.0175 (ft/ft)

Critical Top Width: 1.9951 (ft)

Calculated Max Shear Stress: 1.6162 (lb/ft^2)

Calculated Avg Shear Stress: 0.8718 (lb/ft^2)

Channel Analysis: DD-13e

Notes:

Input Parameters

Channel Type: Triangular

Side Slope 1 (Z1): 2.0000 (ft/ft)

Side Slope 2 (Z2): 2.0000 (ft/ft)

Longitudinal Slope: 0.0478 (ft/ft)

Manning's n: 0.0350

Flow: 3.7700 (cfs)

Result Parameters

Depth: 0.6726 (ft)

Area of Flow: 0.9047 (ft^2)

Wetted Perimeter: 3.0078 (ft)

Average Velocity: 4.1671 (ft/s)

Top Width: 2.6903 (ft)

Froude Number: 1.2663

Critical Depth: 0.7392 (ft)

Critical Velocity: 3.4498 (ft/s)

Critical Slope: 0.0289 (ft/ft)

Critical Top Width: 2.9568 (ft)

Calculated Max Shear Stress: 2.0061 (lb/ft^2)

Calculated Avg Shear Stress: 0.8972 (lb/ft^2)

Channel Analysis: DD-14a

Notes:

Input Parameters

Channel Type: Triangular

Side Slope 1 (Z1): 2.0000 (ft/ft)

Side Slope 2 (Z2): 2.0000 (ft/ft)

Longitudinal Slope: 0.0872 (ft/ft)

Manning's n: 0.0350

Flow: 0.2300 (cfs)

Result Parameters

Depth: 0.2105 (ft)

Area of Flow: 0.0886 (ft^2)

Wetted Perimeter: 0.9415 (ft)

Average Velocity: 2.5947 (ft/s)

Top Width: 0.8421 (ft)

Froude Number: 1.4094

Critical Depth: 0.2415 (ft)

Critical Velocity: 1.9718 (ft/s)

Critical Slope: 0.0419 (ft/ft)

Critical Top Width: 0.9660 (ft)

Calculated Max Shear Stress: 1.1455 (lb/ft^2)

Calculated Avg Shear Stress: 0.5123 (lb/ft^2)

Channel Analysis: DD-14b

Notes:

Input Parameters

Channel Type: Triangular

Side Slope 1 (Z1): 2.0000 (ft/ft)

Side Slope 2 (Z2): 2.0000 (ft/ft)

Longitudinal Slope: 0.0315 (ft/ft)

Manning's n: 0.0350

Flow: 0.5600 (cfs)

Result Parameters

Depth: 0.3557 (ft)

Area of Flow: 0.2531 (ft^2)

Wetted Perimeter: 1.5909 (ft)

Average Velocity: 2.2125 (ft/s)

Top Width: 1.4230 (ft)

Froude Number: 0.9245

Critical Depth: 0.3447 (ft)

Critical Velocity: 2.3559 (ft/s)

Critical Slope: 0.0372 (ft/ft)

Critical Top Width: 1.3790 (ft)

Calculated Max Shear Stress: 0.6993 (lb/ft^2)

Calculated Avg Shear Stress: 0.3127 (lb/ft^2)

Channel Analysis: DC-14

Notes:

Input Parameters

Channel Type: Circular

Pipe Diameter: 1.5000 (ft)

Longitudinal Slope: 0.0333 (ft/ft)

Manning's n: 0.0250

Flow: 1.3400 (cfs)

Result Parameters

Depth: 0.3715 (ft)

Area of Flow: 0.3409 (ft^2)

Wetted Perimeter: 1.5626 (ft)

Average Velocity: 3.9310 (ft/s)

Top Width: 1.2949 (ft)

Froude Number: 1.3502

Critical Depth: 0.4336 (ft)

Critical Velocity: 3.1645 (ft/s)

Critical Slope: 0.0181 (ft/ft)

Critical Top Width: 1.3600 (ft)

Calculated Max Shear Stress: 0.7718 (lb/ft^2)

Calculated Avg Shear Stress: 0.4533 (lb/ft^2)

Channel Analysis: DD-15

Notes:

Input Parameters

Channel Type: Triangular

Side Slope 1 (Z1): 2.0000 (ft/ft)

Side Slope 2 (Z2): 2.0000 (ft/ft)

Longitudinal Slope: 0.0970 (ft/ft)

Manning's n: 0.0350

Flow: 0.7900 (cfs)

Result Parameters

Depth: 0.3278 (ft)

Area of Flow: 0.2149 (ft^2)

Wetted Perimeter: 1.4659 (ft)

Average Velocity: 3.6763 (ft/s)

Top Width: 1.3112 (ft)

Froude Number: 1.6003

Critical Depth: 0.3956 (ft)

Critical Velocity: 2.5238 (ft/s)

Critical Slope: 0.0356 (ft/ft)

Critical Top Width: 1.5825 (ft)

Calculated Max Shear Stress: 1.9840 (lb/ft^2)

Calculated Avg Shear Stress: 0.8873 (lb/ft^2)

Channel Analysis: DC-19

Notes:

Input Parameters

Channel Type: Circular

Pipe Diameter: 1.5000 (ft)

Longitudinal Slope: 0.0250 (ft/ft)

Manning's n: 0.0250

Flow: 1.2800 (cfs)

Result Parameters

Depth: 0.3902 (ft)

Area of Flow: 0.3654 (ft^2)

Wetted Perimeter: 1.6057 (ft)

Average Velocity: 3.5030 (ft/s)

Top Width: 1.3162 (ft)

Froude Number: 1.1716

Critical Depth: 0.4233 (ft)

Critical Velocity: 3.1254 (ft/s)

Critical Slope: 0.0182 (ft/ft)

Critical Top Width: 1.3502 (ft)

Calculated Max Shear Stress: 0.6088 (lb/ft^2)

Calculated Avg Shear Stress: 0.3550 (lb/ft^2)

Channel Analysis: DD-16a

Notes:

Input Parameters

Channel Type: Triangular

Side Slope 1 (Z1): 2.0000 (ft/ft)

Side Slope 2 (Z2): 2.0000 (ft/ft)

Longitudinal Slope: 0.0297 (ft/ft)

Manning's n: 0.0350

Flow: 0.1100 (cfs)

Result Parameters

Depth: 0.1954 (ft)

Area of Flow: 0.0763 (ft^2)

Wetted Perimeter: 0.8738 (ft)

Average Velocity: 1.4408 (ft/s)

Top Width: 0.7815 (ft)

Froude Number: 0.8123

Critical Depth: 0.1798 (ft)

Critical Velocity: 1.7014 (ft/s)

Critical Slope: 0.0463 (ft/ft)

Critical Top Width: 0.7192 (ft)

Calculated Max Shear Stress: 0.3621 (lb/ft^2)

Calculated Avg Shear Stress: 0.1619 (lb/ft^2)

Channel Analysis: DC-15

Notes:

Input Parameters

Channel Type: Circular

Pipe Diameter: 1.2500 (ft)

Longitudinal Slope: 0.0333 (ft/ft)

Manning's n: 0.0250

Flow: 0.1900 (cfs)

Result Parameters

Depth: 0.1510 (ft)

Area of Flow: 0.0842 (ft^2)

Wetted Perimeter: 0.8873 (ft)

Average Velocity: 2.2565 (ft/s)

Top Width: 0.8147 (ft)

Froude Number: 1.2369

Critical Depth: 0.1682 (ft)

Critical Velocity: 1.9282 (ft/s)

Critical Slope: 0.0213 (ft/ft)

Critical Top Width: 0.8530 (ft)

Calculated Max Shear Stress: 0.3137 (lb/ft^2)

Calculated Avg Shear Stress: 0.1972 (lb/ft^2)

Channel Analysis: DD-16b

Notes:

Input Parameters

Channel Type: Triangular

Side Slope 1 (Z1): 2.0000 (ft/ft)

Side Slope 2 (Z2): 2.0000 (ft/ft)

Longitudinal Slope: 0.0606 (ft/ft)

Manning's n: 0.0350

Flow: 0.1700 (cfs)

Result Parameters

Depth: 0.2012 (ft)

Area of Flow: 0.0810 (ft^2)

Wetted Perimeter: 0.9000 (ft)

Average Velocity: 2.0990 (ft/s)

Top Width: 0.8049 (ft)

Froude Number: 1.1661

Critical Depth: 0.2140 (ft)

Critical Velocity: 1.8562 (ft/s)

Critical Slope: 0.0437 (ft/ft)

Critical Top Width: 0.8560 (ft)

Calculated Max Shear Stress: 0.7610 (lb/ft^2)

Calculated Avg Shear Stress: 0.3403 (lb/ft^2)

Channel Analysis: DD-17a

Notes:

Input Parameters

Channel Type: Triangular

Side Slope 1 (Z1): 2.0000 (ft/ft)

Side Slope 2 (Z2): 2.0000 (ft/ft)

Longitudinal Slope: 0.0268 (ft/ft)

Manning's n: 0.0350

Flow: 0.3100 (cfs)

Result Parameters

Depth: 0.2938 (ft)

Area of Flow: 0.1726 (ft^2)

Wetted Perimeter: 1.3137 (ft)

Average Velocity: 1.7962 (ft/s)

Top Width: 1.1750 (ft)

Froude Number: 0.8259

Critical Depth: 0.2721 (ft)

Critical Velocity: 2.0931 (ft/s)

Critical Slope: 0.0403 (ft/ft)

Critical Top Width: 1.0885 (ft)

Calculated Max Shear Stress: 0.4913 (lb/ft^2)

Calculated Avg Shear Stress: 0.2197 (lb/ft^2)

Channel Analysis: DC-16

Notes:

Input Parameters

Channel Type: Circular

Pipe Diameter: 1.2500 (ft)

Longitudinal Slope: 0.0333 (ft/ft)

Manning's n: 0.0250

Flow: 0.5300 (cfs)

Result Parameters

Depth: 0.2484 (ft)

Area of Flow: 0.1732 (ft^2)

Wetted Perimeter: 1.1552 (ft)

Average Velocity: 3.0605 (ft/s)

Top Width: 0.9977 (ft)

Froude Number: 1.2945

Critical Depth: 0.2835 (ft)

Critical Velocity: 2.5354 (ft/s)

Critical Slope: 0.0196 (ft/ft)

Critical Top Width: 1.0469 (ft)

Calculated Max Shear Stress: 0.5163 (lb/ft^2)

Calculated Avg Shear Stress: 0.3115 (lb/ft^2)

Channel Analysis: DD-17b

Notes:

Input Parameters

Channel Type: Triangular

Side Slope 1 (Z1): 2.0000 (ft/ft)

Side Slope 2 (Z2): 2.0000 (ft/ft)

Longitudinal Slope: 0.0412 (ft/ft)

Manning's n: 0.0350

Flow: 0.5300 (cfs)

Result Parameters

Depth: 0.3314 (ft)

Area of Flow: 0.2196 (ft^2)

Wetted Perimeter: 1.4819 (ft)

Average Velocity: 2.4133 (ft/s)

Top Width: 1.3255 (ft)

Froude Number: 1.0448

Critical Depth: 0.3372 (ft)

Critical Velocity: 2.3301 (ft/s)

Critical Slope: 0.0375 (ft/ft)

Critical Top Width: 1.3489 (ft)

Calculated Max Shear Stress: 0.8519 (lb/ft^2)

Calculated Avg Shear Stress: 0.3810 (lb/ft^2)

Channel Analysis: DC-17

Notes:

Input Parameters

Channel Type: Circular

Pipe Diameter: 2.0000 (ft)

Longitudinal Slope: 0.0950 (ft/ft)

Manning's n: 0.0250

Flow: 7.8600 (cfs)

Result Parameters

Depth: 0.6325 (ft)

Area of Flow: 0.8526 (ft^2)

Wetted Perimeter: 2.3889 (ft)

Average Velocity: 9.2184 (ft/s)

Top Width: 1.8600 (ft)

Froude Number: 2.3994

Critical Depth: 0.9971 (ft)

Critical Velocity: 5.0226 (ft/s)

Critical Slope: 0.0180 (ft/ft)

Critical Top Width: 2.0000 (ft)

Calculated Max Shear Stress: 3.7493 (lb/ft^2)

Calculated Avg Shear Stress: 2.1158 (lb/ft^2)

Channel Analysis: DD-18a

Notes:

Input Parameters

Channel Type: Triangular

Side Slope 1 (Z1): 2.0000 (ft/ft)

Side Slope 2 (Z2): 2.0000 (ft/ft)

Longitudinal Slope: 0.0286 (ft/ft)

Manning's n: 0.0350

Flow: 0.0600 (cfs)

Result Parameters

Depth: 0.1568 (ft)

Area of Flow: 0.0491 (ft^2)

Wetted Perimeter: 0.7011 (ft)

Average Velocity: 1.2208 (ft/s)

Top Width: 0.6270 (ft)

Froude Number: 0.7684

Critical Depth: 0.1411 (ft)

Critical Velocity: 1.5071 (ft/s)

Critical Slope: 0.0502 (ft/ft)

Critical Top Width: 0.5643 (ft)

Calculated Max Shear Stress: 0.2798 (lb/ft^2)

Calculated Avg Shear Stress: 0.1251 (lb/ft^2)

Channel Analysis: DC-18

Notes:

Input Parameters

Channel Type: Circular

Pipe Diameter: 1.2500 (ft)

Longitudinal Slope: 0.0570 (ft/ft)

Manning's n: 0.0250

Flow: 0.1000 (cfs)

Result Parameters

Depth: 0.0979 (ft)

Area of Flow: 0.0446 (ft^2)

Wetted Perimeter: 0.7091 (ft)

Average Velocity: 2.2433 (ft/s)

Top Width: 0.6717 (ft)

Froude Number: 1.5346

Critical Depth: 0.1215 (ft)

Critical Velocity: 1.6332 (ft/s)

Critical Slope: 0.0229 (ft/ft)

Critical Top Width: 0.7405 (ft)

Calculated Max Shear Stress: 0.3482 (lb/ft^2)

Calculated Avg Shear Stress: 0.2236 (lb/ft^2)

Channel Analysis: DD-18b

Notes:

Input Parameters

Channel Type: Triangular

Side Slope 1 (Z1): 2.0000 (ft/ft)

Side Slope 2 (Z2): 2.0000 (ft/ft)

Longitudinal Slope: 0.0354 (ft/ft)

Manning's n: 0.0350

Flow: 0.3900 (cfs)

Result Parameters

Depth: 0.3039 (ft)

Area of Flow: 0.1847 (ft^2)

Wetted Perimeter: 1.3590 (ft)

Average Velocity: 2.1116 (ft/s)

Top Width: 1.2156 (ft)

Froude Number: 0.9546

Critical Depth: 0.2983 (ft)

Critical Velocity: 2.1915 (ft/s)

Critical Slope: 0.0391 (ft/ft)

Critical Top Width: 1.1932 (ft)

Calculated Max Shear Stress: 0.6713 (lb/ft^2)

Calculated Avg Shear Stress: 0.3002 (lb/ft^2)

Channel Analysis: DD-20

Notes:

Input Parameters

Channel Type: Triangular

Side Slope 1 (Z1): 2.0000 (ft/ft)

Side Slope 2 (Z2): 2.0000 (ft/ft)

Longitudinal Slope: 0.0488 (ft/ft)

Manning's n: 0.0350

Flow: 3.2100 (cfs)

Result Parameters

Depth: 0.6308 (ft)

Area of Flow: 0.7957 (ft^2)

Wetted Perimeter: 2.8208 (ft)

Average Velocity: 4.0341 (ft/s)

Top Width: 2.5230 (ft)

Froude Number: 1.2659

Critical Depth: 0.6931 (ft)

Critical Velocity: 3.3406 (ft/s)

Critical Slope: 0.0295 (ft/ft)

Critical Top Width: 2.7726 (ft)

Calculated Max Shear Stress: 1.9207 (lb/ft^2)

Calculated Avg Shear Stress: 0.8590 (lb/ft^2)

Channel Analysis: DC-26

Notes:

Input Parameters

Channel Type: Circular

Pipe Diameter: 2.0000 (ft)

Longitudinal Slope: 0.0750 (ft/ft)

Manning's n: 0.0150

Flow: 4.8900 (cfs)

Result Parameters

Depth: 0.4078 (ft)

Area of Flow: 0.4599 (ft^2)

Wetted Perimeter: 1.8741 (ft)

Average Velocity: 10.6335 (ft/s)

Top Width: 1.6116 (ft)

Froude Number: 3.5081

Critical Depth: 0.7783 (ft)

Critical Velocity: 4.3232 (ft/s)

Critical Slope: 0.0061 (ft/ft)

Critical Top Width: 1.9502 (ft)

Calculated Max Shear Stress: 1.9086 (lb/ft^2)

Calculated Avg Shear Stress: 1.1484 (lb/ft^2)

Channel Analysis: DD-1a

Notes:

Input Parameters

Channel Type: Triangular

Side Slope 1 (Z1): 2.0000 (ft/ft)

Side Slope 2 (Z2): 2.0000 (ft/ft)

Longitudinal Slope: 0.1142 (ft/ft)

Manning's n: 0.0350

Flow: 1.0500 (cfs)

Result Parameters

Depth: 0.3537 (ft)

Area of Flow: 0.2502 (ft^2)

Wetted Perimeter: 1.5818 (ft)

Average Velocity: 4.1965 (ft/s)

Top Width: 1.4148 (ft)

Froude Number: 1.7585

Critical Depth: 0.4433 (ft)

Critical Velocity: 2.6715 (ft/s)

Critical Slope: 0.0343 (ft/ft)

Critical Top Width: 1.7732 (ft)

Calculated Max Shear Stress: 2.5205 (lb/ft^2)

Calculated Avg Shear Stress: 1.1272 (lb/ft^2)

Channel Analysis: DD-1b

Notes:

Input Parameters

Channel Type: Trapezoidal

Side Slope 1 (Z1): 2.0000 (ft/ft)

Side Slope 2 (Z2): 2.0000 (ft/ft)

Channel Width: 1.5000 (ft)

Longitudinal Slope: 0.1120 (ft/ft)

Manning's n: 0.0400

Flow: 3.3700 (cfs)

Result Parameters

Depth: 0.3275 (ft)

Area of Flow: 0.7058 (ft^2)

Wetted Perimeter: 2.9647 (ft)

Average Velocity: 4.7748 (ft/s)

Top Width: 2.8100 (ft)

Froude Number: 1.6790

Critical Depth: 0.4403 (ft)

Critical Velocity: 3.2150 (ft/s)

Critical Slope: 0.0369 (ft/ft)

Critical Top Width: 3.2612 (ft)

Calculated Max Shear Stress: 2.2889 (lb/ft^2)

Calculated Avg Shear Stress: 1.6638 (lb/ft^2)

Channel Analysis: DC-1

Notes:

Input Parameters

Channel Type: Circular

Pipe Diameter: 1.5000 (ft)

Longitudinal Slope: 0.1333 (ft/ft)

Manning's n: 0.0250

Flow: 2.8500 (cfs)

Result Parameters

Depth: 0.3831 (ft)

Area of Flow: 0.3561 (ft^2)

Wetted Perimeter: 1.5895 (ft)

Average Velocity: 8.0042 (ft/s)

Top Width: 1.3083 (ft)

Froude Number: 2.7038

Critical Depth: 0.6409 (ft)

Critical Velocity: 3.9558 (ft/s)

Critical Slope: 0.0189 (ft/ft)

Critical Top Width: 1.4840 (ft)

Calculated Max Shear Stress: 3.1867 (lb/ft^2)

Calculated Avg Shear Stress: 1.8633 (lb/ft^2)

Channel Analysis: DC-2

Notes:

Input Parameters

Channel Type: Circular

Pipe Diameter: 1.5000 (ft)

Longitudinal Slope: 0.1077 (ft/ft)

Manning's n: 0.0250

Flow: 3.3700 (cfs)

Result Parameters

Depth: 0.4406 (ft)

Area of Flow: 0.4330 (ft^2)

Wetted Perimeter: 1.7184 (ft)

Average Velocity: 7.7824 (ft/s)

Top Width: 1.3664 (ft)

Froude Number: 2.4362

Critical Depth: 0.6995 (ft)

Critical Velocity: 4.1717 (ft/s)

Critical Slope: 0.0194 (ft/ft)

Critical Top Width: 1.4966 (ft)

Calculated Max Shear Stress: 2.9612 (lb/ft^2)

Calculated Avg Shear Stress: 1.6935 (lb/ft^2)

Channel Analysis: DD-3

Notes:

Input Parameters

Channel Type: Triangular

Side Slope 1 (Z1): 2.0000 (ft/ft)

Side Slope 2 (Z2): 2.0000 (ft/ft)

Longitudinal Slope: 0.0250 (ft/ft)

Manning's n: 0.0350

Flow: 0.2100 (cfs)

Result Parameters

Depth: 0.2572 (ft)

Area of Flow: 0.1323 (ft^2)

Wetted Perimeter: 1.1501 (ft)

Average Velocity: 1.5876 (ft/s)

Top Width: 1.0287 (ft)

Froude Number: 0.7802

Critical Depth: 0.2329 (ft)

Critical Velocity: 1.9363 (ft/s)

Critical Slope: 0.0424 (ft/ft)

Critical Top Width: 0.9315 (ft)

Calculated Max Shear Stress: 0.4012 (lb/ft^2)

Calculated Avg Shear Stress: 0.1794 (lb/ft^2)

Channel Analysis: DC-3

Notes:

Input Parameters

Channel Type: Circular

Pipe Diameter: 1.5000 (ft)

Longitudinal Slope: 0.5000 (ft/ft)

Manning's n: 0.0250

Flow: 0.2100 (cfs)

Result Parameters

Depth: 0.0795 (ft)

Area of Flow: 0.0360 (ft^2)

Wetted Perimeter: 0.6968 (ft)

Average Velocity: 5.8320 (ft/s)

Top Width: 0.6721 (ft)

Froude Number: 4.4400

Critical Depth: 0.1685 (ft)

Critical Velocity: 1.9262 (ft/s)

Critical Slope: 0.0208 (ft/ft)

Critical Top Width: 0.9472 (ft)

Calculated Max Shear Stress: 2.4800 (lb/ft^2)

Calculated Avg Shear Stress: 1.6122 (lb/ft^2)

Channel Analysis: DD-5a

Notes:

Input Parameters

Channel Type: Trapezoidal

Side Slope 1 (Z1): 2.0000 (ft/ft)

Side Slope 2 (Z2): 2.0000 (ft/ft)

Channel Width: 1.5000 (ft)

Longitudinal Slope: 0.1311 (ft/ft)

Manning's n: 0.0450

Flow: 4.3000 (cfs)

Result Parameters

Depth: 0.3815 (ft)

Area of Flow: 0.8634 (ft^2)

Wetted Perimeter: 3.2062 (ft)

Average Velocity: 4.9805 (ft/s)

Top Width: 3.0260 (ft)

Froude Number: 1.6432

Critical Depth: 0.5040 (ft)

Critical Velocity: 3.4015 (ft/s)

Critical Slope: 0.0453 (ft/ft)

Critical Top Width: 3.5161 (ft)

Calculated Max Shear Stress: 3.1210 (lb/ft^2)

Calculated Avg Shear Stress: 2.2029 (lb/ft^2)

Channel Analysis: DC-20

Notes:

Input Parameters

Channel Type: Circular

Pipe Diameter: 2.0000 (ft)

Longitudinal Slope: 0.0963 (ft/ft)

Manning's n: 0.0250

Flow: 4.3000 (cfs)

Result Parameters

Depth: 0.4635 (ft)

Area of Flow: 0.5517 (ft^2)

Wetted Perimeter: 2.0089 (ft)

Average Velocity: 7.7940 (ft/s)

Top Width: 1.6878 (ft)

Froude Number: 2.4024

Critical Depth: 0.7285 (ft)

Critical Velocity: 4.1563 (ft/s)

Critical Slope: 0.0166 (ft/ft)

Critical Top Width: 1.9249 (ft)

Calculated Max Shear Stress: 2.7850 (lb/ft^2)

Calculated Avg Shear Stress: 1.6502 (lb/ft^2)

Channel Analysis: DD-6a

Notes:

Input Parameters

Channel Type: Triangular

Side Slope 1 (Z1): 2.0000 (ft/ft)

Side Slope 2 (Z2): 2.0000 (ft/ft)

Longitudinal Slope: 0.0640 (ft/ft)

Manning's n: 0.0350

Flow: 0.3500 (cfs)

Result Parameters

Depth: 0.2611 (ft)

Area of Flow: 0.1364 (ft^2)

Wetted Perimeter: 1.1678 (ft)

Average Velocity: 2.5662 (ft/s)

Top Width: 1.0446 (ft)

Froude Number: 1.2516

Critical Depth: 0.2857 (ft)

Critical Velocity: 2.1446 (ft/s)

Critical Slope: 0.0397 (ft/ft)

Critical Top Width: 1.1426 (ft)

Calculated Max Shear Stress: 1.0429 (lb/ft^2)

Calculated Avg Shear Stress: 0.4664 (lb/ft^2)

Channel Analysis: DC-21

Notes:

Input Parameters

Channel Type: Circular

Pipe Diameter: 2.0000 (ft)

Longitudinal Slope: 0.0340 (ft/ft)

Manning's n: 0.0250

Flow: 0.3500 (cfs)

Result Parameters

Depth: 0.1770 (ft)

Area of Flow: 0.1366 (ft^2)

Wetted Perimeter: 1.2081 (ft)

Average Velocity: 2.5625 (ft/s)

Top Width: 1.1360 (ft)

Froude Number: 1.3024

Critical Depth: 0.2021 (ft)

Critical Velocity: 2.1073 (ft/s)

Critical Slope: 0.0194 (ft/ft)

Critical Top Width: 1.2057 (ft)

Calculated Max Shear Stress: 0.3754 (lb/ft^2)

Calculated Avg Shear Stress: 0.2399 (lb/ft^2)

Channel Analysis: DC-22

Notes:

Input Parameters

Channel Type: Circular

Pipe Diameter: 2.0000 (ft)

Longitudinal Slope: 0.2830 (ft/ft)

Manning's n: 0.0250

Flow: 5.8800 (cfs)

Result Parameters

Depth: 0.4142 (ft)

Area of Flow: 0.4702 (ft^2)

Wetted Perimeter: 1.8899 (ft)

Average Velocity: 12.5062 (ft/s)

Top Width: 1.6209 (ft)

Froude Number: 4.0922

Critical Depth: 0.8569 (ft)

Critical Velocity: 4.5736 (ft/s)

Critical Slope: 0.0171 (ft/ft)

Critical Top Width: 1.9794 (ft)

Calculated Max Shear Stress: 7.3144 (lb/ft^2)

Calculated Avg Shear Stress: 4.3933 (lb/ft^2)

Channel Analysis: DC-23

Notes:

Input Parameters

Channel Type: Circular

Pipe Diameter: 2.0000 (ft)

Longitudinal Slope: 0.0779 (ft/ft)

Manning's n: 0.0250

Flow: 6.0900 (cfs)

Result Parameters

Depth: 0.5835 (ft)

Area of Flow: 0.7625 (ft^2)

Wetted Perimeter: 2.2824 (ft)

Average Velocity: 7.9868 (ft/s)

Top Width: 1.8183 (ft)

Froude Number: 2.1734

Critical Depth: 0.8730 (ft)

Critical Velocity: 4.6221 (ft/s)

Critical Slope: 0.0172 (ft/ft)

Critical Top Width: 1.9838 (ft)

Calculated Max Shear Stress: 2.8363 (lb/ft^2)

Calculated Avg Shear Stress: 1.6240 (lb/ft^2)

Channel Analysis: DC-24

Notes:

Input Parameters

Channel Type: Circular

Pipe Diameter: 36.0000 (ft)

Longitudinal Slope: 0.0606 (ft/ft)

Manning's n: 0.0250

Flow: 6.5000 (cfs)

Result Parameters

Depth: 0.2991 (ft)

Area of Flow: 1.3055 (ft^2)

Wetted Perimeter: 6.5722 (ft)

Average Velocity: 4.9789 (ft/s)

Top Width: 6.5357 (ft)

Froude Number: 1.9632

Critical Depth: 0.4191 (ft)

Critical Velocity: 3.0049 (ft/s)

Critical Slope: 0.0141 (ft/ft)

Critical Top Width: 7.7235 (ft)

Calculated Max Shear Stress: 1.1311 (lb/ft^2)

Calculated Avg Shear Stress: 0.7511 (lb/ft^2)

Channel Analysis: DC-4

Notes:

Input Parameters

Channel Type: Circular

Pipe Diameter: 1.2500 (ft)

Longitudinal Slope: 0.1050 (ft/ft)

Manning's n: 0.0250

Flow: 0.1700 (cfs)

Result Parameters

Depth: 0.1089 (ft)

Area of Flow: 0.0521 (ft^2)

Wetted Perimeter: 0.7491 (ft)

Average Velocity: 3.2599 (ft/s)

Top Width: 0.7050 (ft)

Froude Number: 2.1123

Critical Depth: 0.1590 (ft)

Critical Velocity: 1.8719 (ft/s)

Critical Slope: 0.0215 (ft/ft)

Critical Top Width: 0.8330 (ft)

Calculated Max Shear Stress: 0.7135 (lb/ft^2)

Calculated Avg Shear Stress: 0.4561 (lb/ft^2)

Channel Analysis: DD-5b

Notes:

Input Parameters

Channel Type: Triangular

Side Slope 1 (Z1): 2.0000 (ft/ft)

Side Slope 2 (Z2): 2.0000 (ft/ft)

Longitudinal Slope: 0.1050 (ft/ft)

Manning's n: 0.0350

Flow: 0.1700 (cfs)

Result Parameters

Depth: 0.1815 (ft)

Area of Flow: 0.0659 (ft^2)

Wetted Perimeter: 0.8118 (ft)

Average Velocity: 2.5794 (ft/s)

Top Width: 0.7261 (ft)

Froude Number: 1.5088

Critical Depth: 0.2140 (ft)

Critical Velocity: 1.8562 (ft/s)

Critical Slope: 0.0437 (ft/ft)

Critical Top Width: 0.8560 (ft)

Calculated Max Shear Stress: 1.1894 (lb/ft^2)

Calculated Avg Shear Stress: 0.5319 (lb/ft^2)

Channel Analysis: DC-5

Notes:

Input Parameters

Channel Type: Circular

Pipe Diameter: 1.2500 (ft)

Longitudinal Slope: 0.1050 (ft/ft)

Manning's n: 0.0250

Flow: 0.1700 (cfs)

Result Parameters

Depth: 0.1089 (ft)

Area of Flow: 0.0521 (ft^2)

Wetted Perimeter: 0.7491 (ft)

Average Velocity: 3.2599 (ft/s)

Top Width: 0.7050 (ft)

Froude Number: 2.1123

Critical Depth: 0.1590 (ft)

Critical Velocity: 1.8719 (ft/s)

Critical Slope: 0.0215 (ft/ft)

Critical Top Width: 0.8330 (ft)

Calculated Max Shear Stress: 0.7135 (lb/ft^2)

Calculated Avg Shear Stress: 0.4561 (lb/ft^2)

Channel Analysis: DD-5c

Notes:

Input Parameters

Channel Type: Triangular

Side Slope 1 (Z1): 2.0000 (ft/ft)

Side Slope 2 (Z2): 2.0000 (ft/ft)

Longitudinal Slope: 0.1050 (ft/ft)

Manning's n: 0.0350

Flow: 0.1700 (cfs)

Result Parameters

Depth: 0.1815 (ft)

Area of Flow: 0.0659 (ft^2)

Wetted Perimeter: 0.8118 (ft)

Average Velocity: 2.5794 (ft/s)

Top Width: 0.7261 (ft)

Froude Number: 1.5088

Critical Depth: 0.2140 (ft)

Critical Velocity: 1.8562 (ft/s)

Critical Slope: 0.0437 (ft/ft)

Critical Top Width: 0.8560 (ft)

Calculated Max Shear Stress: 1.1894 (lb/ft^2)

Calculated Avg Shear Stress: 0.5319 (lb/ft^2)

Channel Analysis: DC-6

Notes:

Input Parameters

Channel Type: Circular

Pipe Diameter: 1.2500 (ft)

Longitudinal Slope: 0.1050 (ft/ft)

Manning's n: 0.0250

Flow: 0.1700 (cfs)

Result Parameters

Depth: 0.1089 (ft)

Area of Flow: 0.0521 (ft^2)

Wetted Perimeter: 0.7491 (ft)

Average Velocity: 3.2599 (ft/s)

Top Width: 0.7050 (ft)

Froude Number: 2.1123

Critical Depth: 0.1590 (ft)

Critical Velocity: 1.8719 (ft/s)

Critical Slope: 0.0215 (ft/ft)

Critical Top Width: 0.8330 (ft)

Calculated Max Shear Stress: 0.7135 (lb/ft^2)

Calculated Avg Shear Stress: 0.4561 (lb/ft^2)

Channel Analysis: DC-25

Notes:

Input Parameters

Channel Type: Circular

Pipe Diameter: 2.0000 (ft)

Longitudinal Slope: 0.0826 (ft/ft)

Manning's n: 0.0250

Flow: 6.6700 (cfs)

Result Parameters

Depth: 0.6023 (ft)

Area of Flow: 0.7969 (ft^2)

Wetted Perimeter: 2.3236 (ft)

Average Velocity: 8.3702 (ft/s)

Top Width: 1.8350 (ft)

Froude Number: 2.2384

Critical Depth: 0.9150 (ft)

Critical Velocity: 4.7606 (ft/s)

Critical Slope: 0.0175 (ft/ft)

Critical Top Width: 1.9928 (ft)

Calculated Max Shear Stress: 3.1044 (lb/ft^2)

Calculated Avg Shear Stress: 1.7677 (lb/ft^2)

Channel Analysis: DD-6b

Notes:

Input Parameters

Channel Type: Triangular

Side Slope 1 (Z1): 2.0000 (ft/ft)

Side Slope 2 (Z2): 2.0000 (ft/ft)

Longitudinal Slope: 0.0050 (ft/ft)

Manning's n: 0.0350

Flow: 3.2700 (cfs)

Result Parameters

Depth: 0.9736 (ft)

Area of Flow: 1.8960 (ft^2)

Wetted Perimeter: 4.3543 (ft)

Average Velocity: 1.7247 (ft/s)

Top Width: 3.8946 (ft)

Froude Number: 0.4356

Critical Depth: 0.6983 (ft)

Critical Velocity: 3.3530 (ft/s)

Critical Slope: 0.0294 (ft/ft)

Critical Top Width: 2.7932 (ft)

Calculated Max Shear Stress: 0.3038 (lb/ft^2)

Calculated Avg Shear Stress: 0.1359 (lb/ft^2)

Channel Analysis: DD-6c

Notes:

Input Parameters

Channel Type: Triangular

Side Slope 1 (Z1): 2.0000 (ft/ft)

Side Slope 2 (Z2): 2.0000 (ft/ft)

Longitudinal Slope: 0.0338 (ft/ft)

Manning's n: 0.0350

Flow: 2.4000 (cfs)

Result Parameters

Depth: 0.6059 (ft)

Area of Flow: 0.7343 (ft^2)

Wetted Perimeter: 2.7097 (ft)

Average Velocity: 3.2686 (ft/s)

Top Width: 2.4237 (ft)

Froude Number: 1.0465

Critical Depth: 0.6170 (ft)

Critical Velocity: 3.1519 (ft/s)

Critical Slope: 0.0307 (ft/ft)

Critical Top Width: 2.4681 (ft)

Calculated Max Shear Stress: 1.2779 (lb/ft^2)

Calculated Avg Shear Stress: 0.5715 (lb/ft^2)

Channel Analysis: DC-8

Notes:

Input Parameters

Channel Type: Circular

Pipe Diameter: 1.5000 (ft)

Longitudinal Slope: 0.3880 (ft/ft)

Manning's n: 0.0250

Flow: 5.6700 (cfs)

Result Parameters

Depth: 0.4142 (ft)

Area of Flow: 0.3973 (ft^2)

Wetted Perimeter: 1.6599 (ft)

Average Velocity: 14.2724 (ft/s)

Top Width: 1.3413 (ft)

Froude Number: 4.6215

Critical Depth: 0.9185 (ft)

Critical Velocity: 4.9995 (ft/s)

Critical Slope: 0.0224 (ft/ft)

Critical Top Width: 1.4617 (ft)

Calculated Max Shear Stress: 10.0287 (lb/ft^2)

Calculated Avg Shear Stress: 5.7946 (lb/ft^2)

Channel Analysis: DD-7

Notes:

Input Parameters

Channel Type: Triangular

Side Slope 1 (Z1): 2.0000 (ft/ft)

Side Slope 2 (Z2): 2.0000 (ft/ft)

Longitudinal Slope: 0.0108 (ft/ft)

Manning's n: 0.0350

Flow: 4.5200 (cfs)

Result Parameters

Depth: 0.9515 (ft)

Area of Flow: 1.8107 (ft^2)

Wetted Perimeter: 4.2553 (ft)

Average Velocity: 2.4962 (ft/s)

Top Width: 3.8060 (ft)

Froude Number: 0.6378

Critical Depth: 0.7948 (ft)

Critical Velocity: 3.5773 (ft/s)

Critical Slope: 0.0282 (ft/ft)

Critical Top Width: 3.1793 (ft)

Calculated Max Shear Stress: 0.6412 (lb/ft^2)

Calculated Avg Shear Stress: 0.2868 (lb/ft^2)

Channel Analysis: DC-7

Notes:

Input Parameters

Channel Type: Circular

Pipe Diameter: 1.5000 (ft)

Longitudinal Slope: 0.4640 (ft/ft)

Manning's n: 0.0250

Flow: 4.5200 (cfs)

Result Parameters

Depth: 0.3530 (ft)

Area of Flow: 0.3172 (ft^2)

Wetted Perimeter: 1.5195 (ft)

Average Velocity: 14.2492 (ft/s)

Top Width: 1.2726 (ft)

Froude Number: 5.0297

Critical Depth: 0.8159 (ft)

Critical Velocity: 4.6013 (ft/s)

Critical Slope: 0.0207 (ft/ft)

Critical Top Width: 1.4942 (ft)

Calculated Max Shear Stress: 10.2211 (lb/ft^2)

Calculated Avg Shear Stress: 6.0443 (lb/ft^2)

Channel Analysis: DD-8a

Notes:

Input Parameters

Channel Type: Triangular

Side Slope 1 (Z1): 2.0000 (ft/ft)

Side Slope 2 (Z2): 2.0000 (ft/ft)

Longitudinal Slope: 0.2042 (ft/ft)

Manning's n: 0.0350

Flow: 0.1900 (cfs)

Result Parameters

Depth: 0.1671 (ft)

Area of Flow: 0.0558 (ft^2)

Wetted Perimeter: 0.7472 (ft)

Average Velocity: 3.4035 (ft/s)

Top Width: 0.6683 (ft)

Froude Number: 2.0752

Critical Depth: 0.2237 (ft)

Critical Velocity: 1.8979 (ft/s)

Critical Slope: 0.0430 (ft/ft)

Critical Top Width: 0.8949 (ft)

Calculated Max Shear Stress: 2.1288 (lb/ft^2)

Calculated Avg Shear Stress: 0.9520 (lb/ft^2)

Channel Analysis: DD-8b

Notes:

Input Parameters

Channel Type: Triangular

Side Slope 1 (Z1): 2.0000 (ft/ft)

Side Slope 2 (Z2): 2.0000 (ft/ft)

Longitudinal Slope: 0.0781 (ft/ft)

Manning's n: 0.0400

Flow: 5.4500 (cfs)

Result Parameters

Depth: 0.7405 (ft)

Area of Flow: 1.0967 (ft^2)

Wetted Perimeter: 3.3116 (ft)

Average Velocity: 4.9695 (ft/s)

Top Width: 2.9620 (ft)

Froude Number: 1.4392

Critical Depth: 0.8566 (ft)

Critical Velocity: 3.7137 (ft/s)

Critical Slope: 0.0359 (ft/ft)

Critical Top Width: 3.4264 (ft)

Calculated Max Shear Stress: 3.6088 (lb/ft^2)

Calculated Avg Shear Stress: 1.6139 (lb/ft^2)

Channel Analysis: DD-9

Notes:

Input Parameters

Channel Type: Triangular

Side Slope 1 (Z1): 2.0000 (ft/ft)

Side Slope 2 (Z2): 2.0000 (ft/ft)

Longitudinal Slope: 0.1000 (ft/ft)

Manning's n: 0.0350

Flow: 0.0700 (cfs)

Result Parameters

Depth: 0.1313 (ft)

Area of Flow: 0.0345 (ft^2)

Wetted Perimeter: 0.5874 (ft)

Average Velocity: 2.0288 (ft/s)

Top Width: 0.5254 (ft)

Froude Number: 1.3951

Critical Depth: 0.1501 (ft)

Critical Velocity: 1.5543 (ft/s)

Critical Slope: 0.0491 (ft/ft)

Critical Top Width: 0.6002 (ft)

Calculated Max Shear Stress: 0.8196 (lb/ft^2)

Calculated Avg Shear Stress: 0.3665 (lb/ft^2)

Channel Analysis: DC-9

Notes:

Input Parameters

Channel Type: Circular

Pipe Diameter: 1.5000 (ft)

Longitudinal Slope: 0.0460 (ft/ft)

Manning's n: 0.0250

Flow: 0.0700 (cfs)

Result Parameters

Depth: 0.0831 (ft)

Area of Flow: 0.0385 (ft^2)

Wetted Perimeter: 0.7128 (ft)

Average Velocity: 1.8203 (ft/s)

Top Width: 0.6862 (ft)

Froude Number: 1.3551

Critical Depth: 0.0969 (ft)

Critical Velocity: 1.4504 (ft/s)

Critical Slope: 0.0239 (ft/ft)

Critical Top Width: 0.7373 (ft)

Calculated Max Shear Stress: 0.2385 (lb/ft^2)

Calculated Avg Shear Stress: 0.1549 (lb/ft^2)

Channel Analysis: DD-10

Notes:

Input Parameters

Channel Type: Triangular

Side Slope 1 (Z1): 2.0000 (ft/ft)

Side Slope 2 (Z2): 2.0000 (ft/ft)

Longitudinal Slope: 0.0312 (ft/ft)

Manning's n: 0.0350

Flow: 2.4900 (cfs)

Result Parameters

Depth: 0.6236 (ft)

Area of Flow: 0.7778 (ft^2)

Wetted Perimeter: 2.7889 (ft)

Average Velocity: 3.2013 (ft/s)

Top Width: 2.4945 (ft)

Froude Number: 1.0103

Critical Depth: 0.6262 (ft)

Critical Velocity: 3.1751 (ft/s)

Critical Slope: 0.0305 (ft/ft)

Critical Top Width: 2.5047 (ft)

Calculated Max Shear Stress: 1.2141 (lb/ft^2)

Calculated Avg Shear Stress: 0.5430 (lb/ft^2)

Channel Analysis: DC-12

Notes:

Input Parameters

Channel Type: Circular

Pipe Diameter: 1.5000 (ft)

Longitudinal Slope: 0.0400 (ft/ft)

Manning's n: 0.0250

Flow: 2.4900 (cfs)

Result Parameters

Depth: 0.4869 (ft)

Area of Flow: 0.4972 (ft^2)

Wetted Perimeter: 1.8186 (ft)

Average Velocity: 5.0078 (ft/s)

Top Width: 1.4047 (ft)

Froude Number: 1.4833

Critical Depth: 0.5977 (ft)

Critical Velocity: 3.7920 (ft/s)

Critical Slope: 0.0186 (ft/ft)

Critical Top Width: 1.4687 (ft)

Calculated Max Shear Stress: 1.2154 (lb/ft^2)

Calculated Avg Shear Stress: 0.6824 (lb/ft^2)

Channel Analysis: DD-11

Notes:

Input Parameters

Channel Type: Triangular

Side Slope 1 (Z1): 2.0000 (ft/ft)

Side Slope 2 (Z2): 2.0000 (ft/ft)

Longitudinal Slope: 0.0506 (ft/ft)

Manning's n: 0.0350

Flow: 0.9200 (cfs)

Result Parameters

Depth: 0.3921 (ft)

Area of Flow: 0.3075 (ft^2)

Wetted Perimeter: 1.7535 (ft)

Average Velocity: 2.9920 (ft/s)

Top Width: 1.5684 (ft)

Froude Number: 1.1908

Critical Depth: 0.4205 (ft)

Critical Velocity: 2.6018 (ft/s)

Critical Slope: 0.0349 (ft/ft)

Critical Top Width: 1.6819 (ft)

Calculated Max Shear Stress: 1.2380 (lb/ft^2)

Calculated Avg Shear Stress: 0.5537 (lb/ft^2)

Channel Analysis: DD-13a

Notes:

Input Parameters

Channel Type: Triangular

Side Slope 1 (Z1): 2.0000 (ft/ft)

Side Slope 2 (Z2): 2.0000 (ft/ft)

Longitudinal Slope: 0.0253 (ft/ft)

Manning's n: 0.0350

Flow: 2.3000 (cfs)

Result Parameters

Depth: 0.6296 (ft)

Area of Flow: 0.7928 (ft^2)

Wetted Perimeter: 2.8157 (ft)

Average Velocity: 2.9011 (ft/s)

Top Width: 2.5184 (ft)

Froude Number: 0.9112

Critical Depth: 0.6066 (ft)

Critical Velocity: 3.1251 (ft/s)

Critical Slope: 0.0309 (ft/ft)

Critical Top Width: 2.4265 (ft)

Calculated Max Shear Stress: 0.9940 (lb/ft^2)

Calculated Avg Shear Stress: 0.4445 (lb/ft^2)

Channel Analysis: DD-13b

Notes:

Input Parameters

Channel Type: Triangular

Side Slope 1 (Z1): 2.0000 (ft/ft)

Side Slope 2 (Z2): 2.0000 (ft/ft)

Longitudinal Slope: 0.0323 (ft/ft)

Manning's n: 0.0350

Flow: 3.2200 (cfs)

Result Parameters

Depth: 0.6823 (ft)

Area of Flow: 0.9311 (ft^2)

Wetted Perimeter: 3.0513 (ft)

Average Velocity: 3.4584 (ft/s)

Top Width: 2.7292 (ft)

Froude Number: 1.0435

Critical Depth: 0.6940 (ft)

Critical Velocity: 3.3427 (ft/s)

Critical Slope: 0.0295 (ft/ft)

Critical Top Width: 2.7760 (ft)

Calculated Max Shear Stress: 1.3752 (lb/ft^2)

Calculated Avg Shear Stress: 0.6150 (lb/ft^2)

Channel Analysis: DD-13c

Notes:

Input Parameters

Channel Type: Triangular

Side Slope 1 (Z1): 2.0000 (ft/ft)

Side Slope 2 (Z2): 2.0000 (ft/ft)

Longitudinal Slope: 0.0330 (ft/ft)

Manning's n: 0.0350

Flow: 5.7100 (cfs)

Result Parameters

Depth: 0.8424 (ft)

Area of Flow: 1.4193 (ft^2)

Wetted Perimeter: 3.7673 (ft)

Average Velocity: 4.0231 (ft/s)

Top Width: 3.3696 (ft)

Froude Number: 1.0924

Critical Depth: 0.8727 (ft)

Critical Velocity: 3.7484 (ft/s)

Critical Slope: 0.0273 (ft/ft)

Critical Top Width: 3.4909 (ft)

Calculated Max Shear Stress: 1.7347 (lb/ft^2)

Calculated Avg Shear Stress: 0.7758 (lb/ft^2)

Channel Analysis: DD-13d

Notes:

Input Parameters

Channel Type: Triangular

Side Slope 1 (Z1): 2.0000 (ft/ft)

Side Slope 2 (Z2): 2.0000 (ft/ft)

Longitudinal Slope: 0.0125 (ft/ft)

Manning's n: 0.0350

Flow: 6.8700 (cfs)

Result Parameters

Depth: 1.0832 (ft)

Area of Flow: 2.3465 (ft^2)

Wetted Perimeter: 4.8440 (ft)

Average Velocity: 2.9278 (ft/s)

Top Width: 4.3326 (ft)

Froude Number: 0.7011

Critical Depth: 0.9397 (ft)

Critical Velocity: 3.8897 (ft/s)

Critical Slope: 0.0267 (ft/ft)

Critical Top Width: 3.7589 (ft)

Calculated Max Shear Stress: 0.8449 (lb/ft^2)

Calculated Avg Shear Stress: 0.3778 (lb/ft^2)

Channel Analysis: DC-13

Notes:

Input Parameters

Channel Type: Circular

Pipe Diameter: 2.0000 (ft)

Longitudinal Slope: 0.0333 (ft/ft)

Manning's n: 0.0250

Flow: 6.8700 (cfs)

Result Parameters

Depth: 0.7778 (ft)

Area of Flow: 1.1301 (ft^2)

Wetted Perimeter: 2.6935 (ft)

Average Velocity: 6.0791 (ft/s)

Top Width: 1.9500 (ft)

Froude Number: 1.4073

Critical Depth: 0.9297 (ft)

Critical Velocity: 4.8032 (ft/s)

Critical Slope: 0.0175 (ft/ft)

Critical Top Width: 1.9951 (ft)

Calculated Max Shear Stress: 1.6162 (lb/ft^2)

Calculated Avg Shear Stress: 0.8718 (lb/ft^2)

Channel Analysis: DD-13e

Notes:

Input Parameters

Channel Type: Triangular

Side Slope 1 (Z1): 2.0000 (ft/ft)

Side Slope 2 (Z2): 2.0000 (ft/ft)

Longitudinal Slope: 0.0478 (ft/ft)

Manning's n: 0.0350

Flow: 7.2500 (cfs)

Result Parameters

Depth: 0.8595 (ft)

Area of Flow: 1.4774 (ft^2)

Wetted Perimeter: 3.8437 (ft)

Average Velocity: 4.9072 (ft/s)

Top Width: 3.4379 (ft)

Froude Number: 1.3192

Critical Depth: 0.9602 (ft)

Critical Velocity: 3.9318 (ft/s)

Critical Slope: 0.0265 (ft/ft)

Critical Top Width: 3.8408 (ft)

Calculated Max Shear Stress: 2.5636 (lb/ft^2)

Calculated Avg Shear Stress: 1.1465 (lb/ft^2)

Channel Analysis: DD-14a

Notes:

Input Parameters

Channel Type: Triangular

Side Slope 1 (Z1): 2.0000 (ft/ft)

Side Slope 2 (Z2): 2.0000 (ft/ft)

Longitudinal Slope: 0.0872 (ft/ft)

Manning's n: 0.0350

Flow: 0.3900 (cfs)

Result Parameters

Depth: 0.2566 (ft)

Area of Flow: 0.1317 (ft^2)

Wetted Perimeter: 1.1477 (ft)

Average Velocity: 2.9609 (ft/s)

Top Width: 1.0265 (ft)

Froude Number: 1.4567

Critical Depth: 0.2983 (ft)

Critical Velocity: 2.1915 (ft/s)

Critical Slope: 0.0391 (ft/ft)

Critical Top Width: 1.1932 (ft)

Calculated Max Shear Stress: 1.3964 (lb/ft^2)

Calculated Avg Shear Stress: 0.6245 (lb/ft^2)

Channel Analysis: DD-14b

Notes:

Input Parameters

Channel Type: Triangular

Side Slope 1 (Z1): 2.0000 (ft/ft)

Side Slope 2 (Z2): 2.0000 (ft/ft)

Longitudinal Slope: 0.0315 (ft/ft)

Manning's n: 0.0350

Flow: 0.9500 (cfs)

Result Parameters

Depth: 0.4337 (ft)

Area of Flow: 0.3762 (ft^2)

Wetted Perimeter: 1.9397 (ft)

Average Velocity: 2.5250 (ft/s)

Top Width: 1.7349 (ft)

Froude Number: 0.9555

Critical Depth: 0.4259 (ft)

Critical Velocity: 2.6186 (ft/s)

Critical Slope: 0.0347 (ft/ft)

Critical Top Width: 1.7036 (ft)

Calculated Max Shear Stress: 0.8525 (lb/ft^2)

Calculated Avg Shear Stress: 0.3813 (lb/ft^2)

Channel Analysis: DC-14

Notes:

Input Parameters

Channel Type: Circular

Pipe Diameter: 1.5000 (ft)

Longitudinal Slope: 0.0333 (ft/ft)

Manning's n: 0.0250

Flow: 1.3400 (cfs)

Result Parameters

Depth: 0.3715 (ft)

Area of Flow: 0.3409 (ft^2)

Wetted Perimeter: 1.5626 (ft)

Average Velocity: 3.9310 (ft/s)

Top Width: 1.2949 (ft)

Froude Number: 1.3502

Critical Depth: 0.4336 (ft)

Critical Velocity: 3.1645 (ft/s)

Critical Slope: 0.0181 (ft/ft)

Critical Top Width: 1.3600 (ft)

Calculated Max Shear Stress: 0.7718 (lb/ft^2)

Calculated Avg Shear Stress: 0.4533 (lb/ft^2)

Channel Analysis: DD-15

Notes:

Input Parameters

Channel Type: Triangular

Side Slope 1 (Z1): 2.0000 (ft/ft)

Side Slope 2 (Z2): 2.0000 (ft/ft)

Longitudinal Slope: 0.0970 (ft/ft)

Manning's n: 0.0350

Flow: 1.2800 (cfs)

Result Parameters

Depth: 0.3928 (ft)

Area of Flow: 0.3086 (ft^2)

Wetted Perimeter: 1.7567 (ft)

Average Velocity: 4.1477 (ft/s)

Top Width: 1.5713 (ft)

Froude Number: 1.6493

Critical Depth: 0.4799 (ft)

Critical Velocity: 2.7795 (ft/s)

Critical Slope: 0.0334 (ft/ft)

Critical Top Width: 1.9194 (ft)

Calculated Max Shear Stress: 2.3776 (lb/ft^2)

Calculated Avg Shear Stress: 1.0633 (lb/ft^2)

Channel Analysis: DC-19

Notes:

Input Parameters

Channel Type: Circular

Pipe Diameter: 1.5000 (ft)

Longitudinal Slope: 0.0250 (ft/ft)

Manning's n: 0.0250

Flow: 1.2800 (cfs)

Result Parameters

Depth: 0.3902 (ft)

Area of Flow: 0.3654 (ft^2)

Wetted Perimeter: 1.6057 (ft)

Average Velocity: 3.5030 (ft/s)

Top Width: 1.3162 (ft)

Froude Number: 1.1716

Critical Depth: 0.4233 (ft)

Critical Velocity: 3.1254 (ft/s)

Critical Slope: 0.0182 (ft/ft)

Critical Top Width: 1.3502 (ft)

Calculated Max Shear Stress: 0.6088 (lb/ft^2)

Calculated Avg Shear Stress: 0.3550 (lb/ft^2)

Channel Analysis: DD-16a

Notes:

Input Parameters

Channel Type: Triangular

Side Slope 1 (Z1): 2.0000 (ft/ft)

Side Slope 2 (Z2): 2.0000 (ft/ft)

Longitudinal Slope: 0.0297 (ft/ft)

Manning's n: 0.0350

Flow: 0.1900 (cfs)

Result Parameters

Depth: 0.2398 (ft)

Area of Flow: 0.1150 (ft^2)

Wetted Perimeter: 1.0725 (ft)

Average Velocity: 1.6517 (ft/s)

Top Width: 0.9593 (ft)

Froude Number: 0.8406

Critical Depth: 0.2237 (ft)

Critical Velocity: 1.8979 (ft/s)

Critical Slope: 0.0430 (ft/ft)

Critical Top Width: 0.8949 (ft)

Calculated Max Shear Stress: 0.4445 (lb/ft^2)

Calculated Avg Shear Stress: 0.1988 (lb/ft^2)

Channel Analysis: DC-15

Notes:

Input Parameters

Channel Type: Circular

Pipe Diameter: 1.2500 (ft)

Longitudinal Slope: 0.0333 (ft/ft)

Manning's n: 0.0250

Flow: 0.1900 (cfs)

Result Parameters

Depth: 0.1510 (ft)

Area of Flow: 0.0842 (ft^2)

Wetted Perimeter: 0.8873 (ft)

Average Velocity: 2.2565 (ft/s)

Top Width: 0.8147 (ft)

Froude Number: 1.2369

Critical Depth: 0.1682 (ft)

Critical Velocity: 1.9282 (ft/s)

Critical Slope: 0.0213 (ft/ft)

Critical Top Width: 0.8530 (ft)

Calculated Max Shear Stress: 0.3137 (lb/ft^2)

Calculated Avg Shear Stress: 0.1972 (lb/ft^2)

Channel Analysis: DD-16b

Notes:

Input Parameters

Channel Type: Triangular

Side Slope 1 (Z1): 2.0000 (ft/ft)

Side Slope 2 (Z2): 2.0000 (ft/ft)

Longitudinal Slope: 0.0606 (ft/ft)

Manning's n: 0.0350

Flow: 0.2900 (cfs)

Result Parameters

Depth: 0.2459 (ft)

Area of Flow: 0.1209 (ft^2)

Wetted Perimeter: 1.0995 (ft)

Average Velocity: 2.3988 (ft/s)

Top Width: 0.9834 (ft)

Froude Number: 1.2057

Critical Depth: 0.2650 (ft)

Critical Velocity: 2.0654 (ft/s)

Critical Slope: 0.0407 (ft/ft)

Critical Top Width: 1.0598 (ft)

Calculated Max Shear Stress: 0.9297 (lb/ft^2)

Calculated Avg Shear Stress: 0.4158 (lb/ft^2)

Channel Analysis: DD-17a

Notes:

Input Parameters

Channel Type: Triangular

Side Slope 1 (Z1): 2.0000 (ft/ft)

Side Slope 2 (Z2): 2.0000 (ft/ft)

Longitudinal Slope: 0.0268 (ft/ft)

Manning's n: 0.0350

Flow: 0.5300 (cfs)

Result Parameters

Depth: 0.3592 (ft)

Area of Flow: 0.2580 (ft^2)

Wetted Perimeter: 1.6064 (ft)

Average Velocity: 2.0539 (ft/s)

Top Width: 1.4368 (ft)

Froude Number: 0.8541

Critical Depth: 0.3372 (ft)

Critical Velocity: 2.3301 (ft/s)

Critical Slope: 0.0375 (ft/ft)

Critical Top Width: 1.3489 (ft)

Calculated Max Shear Stress: 0.6007 (lb/ft^2)

Calculated Avg Shear Stress: 0.2686 (lb/ft^2)

Channel Analysis: DC-16

Notes:

Input Parameters

Channel Type: Circular

Pipe Diameter: 1.2500 (ft)

Longitudinal Slope: 0.0333 (ft/ft)

Manning's n: 0.0250

Flow: 0.5300 (cfs)

Result Parameters

Depth: 0.2484 (ft)

Area of Flow: 0.1732 (ft^2)

Wetted Perimeter: 1.1552 (ft)

Average Velocity: 3.0605 (ft/s)

Top Width: 0.9977 (ft)

Froude Number: 1.2945

Critical Depth: 0.2835 (ft)

Critical Velocity: 2.5354 (ft/s)

Critical Slope: 0.0196 (ft/ft)

Critical Top Width: 1.0469 (ft)

Calculated Max Shear Stress: 0.5163 (lb/ft^2)

Calculated Avg Shear Stress: 0.3115 (lb/ft^2)

Channel Analysis: DD-17b

Notes:

Input Parameters

Channel Type: Triangular

Side Slope 1 (Z1): 2.0000 (ft/ft)

Side Slope 2 (Z2): 2.0000 (ft/ft)

Longitudinal Slope: 0.0412 (ft/ft)

Manning's n: 0.0350

Flow: 0.9000 (cfs)

Result Parameters

Depth: 0.4042 (ft)

Area of Flow: 0.3267 (ft^2)

Wetted Perimeter: 1.8074 (ft)

Average Velocity: 2.7549 (ft/s)

Top Width: 1.6166 (ft)

Froude Number: 1.0800

Critical Depth: 0.4168 (ft)

Critical Velocity: 2.5904 (ft/s)

Critical Slope: 0.0350 (ft/ft)

Critical Top Width: 1.6672 (ft)

Calculated Max Shear Stress: 1.0390 (lb/ft^2)

Calculated Avg Shear Stress: 0.4647 (lb/ft^2)

Channel Analysis: DC-17

Notes:

Input Parameters

Channel Type: Circular

Pipe Diameter: 2.0000 (ft)

Longitudinal Slope: 0.0950 (ft/ft)

Manning's n: 0.0250

Flow: 7.8600 (cfs)

Result Parameters

Depth: 0.6325 (ft)

Area of Flow: 0.8526 (ft^2)

Wetted Perimeter: 2.3889 (ft)

Average Velocity: 9.2184 (ft/s)

Top Width: 1.8600 (ft)

Froude Number: 2.3994

Critical Depth: 0.9971 (ft)

Critical Velocity: 5.0226 (ft/s)

Critical Slope: 0.0180 (ft/ft)

Critical Top Width: 2.0000 (ft)

Calculated Max Shear Stress: 3.7493 (lb/ft^2)

Calculated Avg Shear Stress: 2.1158 (lb/ft^2)

Channel Analysis: DD-18a

Notes:

Input Parameters

Channel Type: Triangular

Side Slope 1 (Z1): 2.0000 (ft/ft)

Side Slope 2 (Z2): 2.0000 (ft/ft)

Longitudinal Slope: 0.0286 (ft/ft)

Manning's n: 0.0350

Flow: 0.1000 (cfs)

Result Parameters

Depth: 0.1899 (ft)

Area of Flow: 0.0721 (ft^2)

Wetted Perimeter: 0.8491 (ft)

Average Velocity: 1.3871 (ft/s)

Top Width: 0.7594 (ft)

Froude Number: 0.7934

Critical Depth: 0.1731 (ft)

Critical Velocity: 1.6693 (ft/s)

Critical Slope: 0.0469 (ft/ft)

Critical Top Width: 0.6923 (ft)

Calculated Max Shear Stress: 0.3388 (lb/ft^2)

Calculated Avg Shear Stress: 0.1515 (lb/ft^2)

Channel Analysis: DC-18

Notes:

Input Parameters

Channel Type: Circular

Pipe Diameter: 1.2500 (ft)

Longitudinal Slope: 0.0570 (ft/ft)

Manning's n: 0.0250

Flow: 0.1000 (cfs)

Result Parameters

Depth: 0.0979 (ft)

Area of Flow: 0.0446 (ft^2)

Wetted Perimeter: 0.7091 (ft)

Average Velocity: 2.2433 (ft/s)

Top Width: 0.6717 (ft)

Froude Number: 1.5346

Critical Depth: 0.1215 (ft)

Critical Velocity: 1.6332 (ft/s)

Critical Slope: 0.0229 (ft/ft)

Critical Top Width: 0.7405 (ft)

Calculated Max Shear Stress: 0.3482 (lb/ft^2)

Calculated Avg Shear Stress: 0.2236 (lb/ft^2)

Channel Analysis: DD-18b

Notes:

Input Parameters

Channel Type: Triangular

Side Slope 1 (Z1): 2.0000 (ft/ft)

Side Slope 2 (Z2): 2.0000 (ft/ft)

Longitudinal Slope: 0.0354 (ft/ft)

Manning's n: 0.0350

Flow: 0.6600 (cfs)

Result Parameters

Depth: 0.3702 (ft)

Area of Flow: 0.2740 (ft^2)

Wetted Perimeter: 1.6554 (ft)

Average Velocity: 2.4084 (ft/s)

Top Width: 1.4807 (ft)

Froude Number: 0.9865

Critical Depth: 0.3682 (ft)

Critical Velocity: 2.4346 (ft/s)

Critical Slope: 0.0364 (ft/ft)

Critical Top Width: 1.4727 (ft)

Calculated Max Shear Stress: 0.8177 (lb/ft^2)

Calculated Avg Shear Stress: 0.3657 (lb/ft^2)

Channel Analysis: DD-20

Notes:

Input Parameters

Channel Type: Triangular

Side Slope 1 (Z1): 2.0000 (ft/ft)

Side Slope 2 (Z2): 2.0000 (ft/ft)

Longitudinal Slope: 0.0488 (ft/ft)

Manning's n: 0.0350

Flow: 6.5500 (cfs)

Result Parameters

Depth: 0.8242 (ft)

Area of Flow: 1.3585 (ft^2)

Wetted Perimeter: 3.6858 (ft)

Average Velocity: 4.8215 (ft/s)

Top Width: 3.2967 (ft)

Froude Number: 1.3236

Critical Depth: 0.9220 (ft)

Critical Velocity: 3.8528 (ft/s)

Critical Slope: 0.0268 (ft/ft)

Critical Top Width: 3.6879 (ft)

Calculated Max Shear Stress: 2.5097 (lb/ft^2)

Calculated Avg Shear Stress: 1.1224 (lb/ft^2)

Channel Analysis: DC-26

Notes:

Input Parameters

Channel Type: Circular

Pipe Diameter: 2.0000 (ft)

Longitudinal Slope: 0.0750 (ft/ft)

Manning's n: 0.0250

Flow: 9.8000 (cfs)

Result Parameters

Depth: 0.7568 (ft)

Area of Flow: 1.0892 (ft^2)

Wetted Perimeter: 2.6502 (ft)

Average Velocity: 8.9978 (ft/s)

Top Width: 1.9399 (ft)

Froude Number: 2.1162

Critical Depth: 1.1191 (ft)

Critical Velocity: 5.4188 (ft/s)

Critical Slope: 0.0191 (ft/ft)

Critical Top Width: 1.9858 (ft)

Calculated Max Shear Stress: 3.5416 (lb/ft^2)

Calculated Avg Shear Stress: 1.9234 (lb/ft^2)

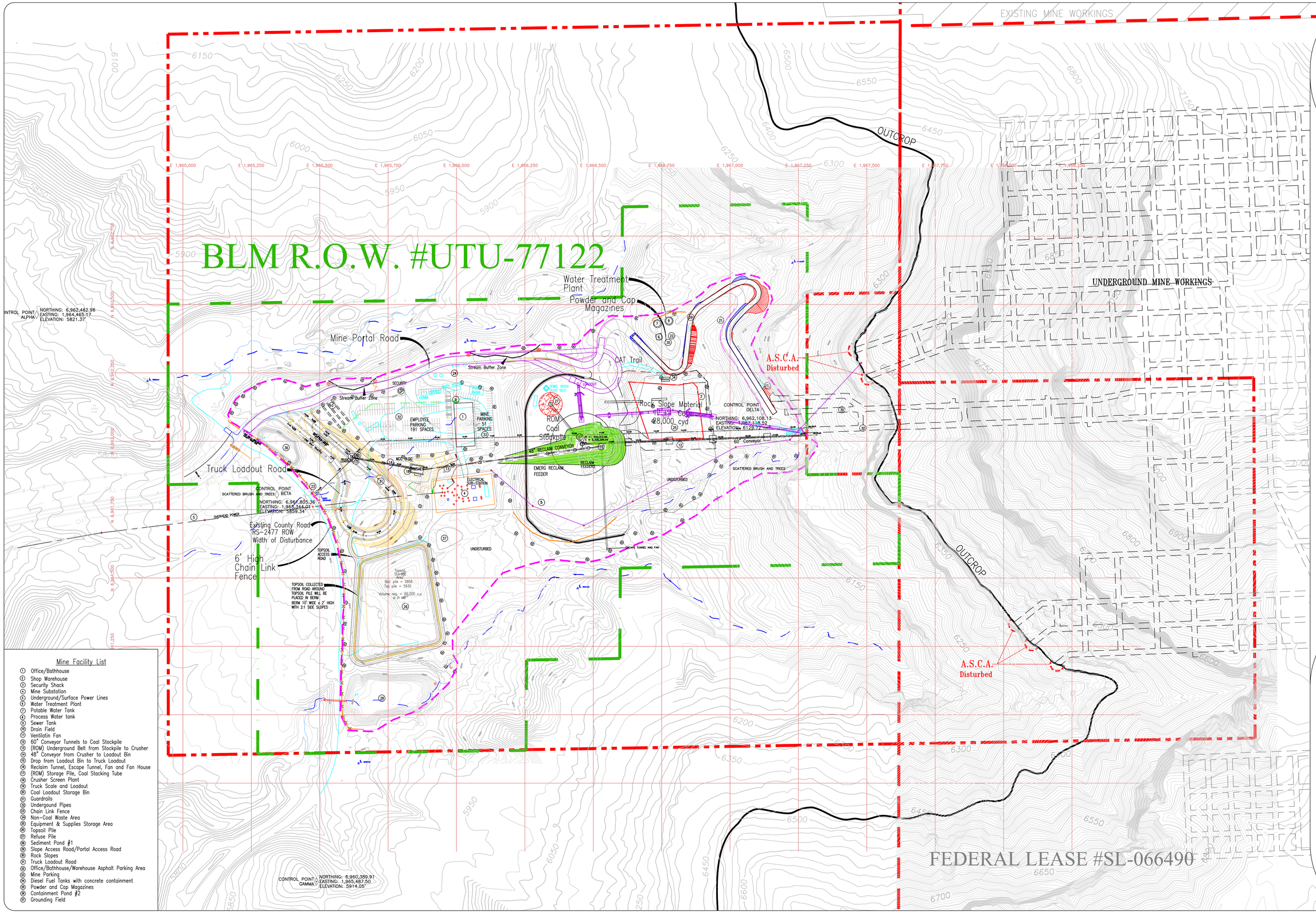

Mine Facility List

1. Office/Bathhouse
2. Shop Warehouse
3. Security Shack
4. Mine Substation
5. Underground/Surface Power Lines
6. Water Treatment Plant
7. Potable Water Tank
8. Process Water tank
9. Sewer Tank
10. Drain Field
11. Ventilatin Fan
12. 60" Conveyor Tunnels to Coal Stockpile
13. (ROM) Underground Belt from Stockpile to Crusher
14. 48" Conveyor from Crusher to Loadout Bin
15. Drop from Loadout Bin to Truck Loadout
16. Reclaim Tunnel, Escape Tunnel, Fan and Fan House
17. (ROM) Storage Pile, Coal Stacking Tube
18. Crusher Screen Plant
19. Truck Scale and Loadout
20. Coal Loadout Storage Bin
21. Guardrails
22. Undergound Pipes
23. Chain Link Fence
24. Non-Coal Waste Area
25. Equipment & Supplies Storage Area
26. Topsoil Pile
27. Refuse Pile
28. Sediment Pond #1
29. Slope Access Road/Portal Access Road
30. Rock Slopes
31. Truck Loadout Road
32. Office/Bathhouse/Warehouse Asphalt Parking Area
33. Mine Parking
34. Diesel Fuel Tanks with concrete containment
35. Powder and Cap Magazines
36. Containment Pond #2
37. Grounding Field

LEGEND:

- STRUCTURAL FILL:
- TEMP. REFUSE PILE (COAL MINE WASTE):
- TOPSOIL BERM:
- Stream Buffer Zone
- TEMPORARY FACILITIES:
- TEMPORARY ROADWAYS:
- LEASE MODIFICATION:
- BLM R.O.W. BOUNDARY LINE:
- UNDISTURBED WITHIN THE DISTURBED AREA
- DISTURBED AREA BOUNDARY:
- NATURAL DRAINAGE:
- 6' HIGH CHAIN LINK FENCE
- INCIDENTAL ROCK DISTRIBUTION:
- STREAM BUFFER ZONE SIGNS

NOTES:
(1) REFER TO PLATE 5-7A&B FOR CROSS-SECTIONS.

NOTE:
ITEMS SHOWN IN PURPLE ARE PART OF THE PHASE 2 COAL HANDLING FACILITIES.

NOTE:
CONTROL POINT COORDINATE SYSTEM IS U.S. STATE PLANE 1983 - UTAH CENTRAL (4302) ADJUSTED TO SEA LEVEL.

REVISION DATE:

DATE:	BY:	DATE:	BY:
JAN 2008	RJM	JUNE 2011	PJJ
APR. 2009	PJJ	JAN. 2012	PJJ
DEC. 2009	PJJ	MAR. 2014	PJJ
AUGUST 2010	PJJ	JULY 2014	PJJ
SEPT. 2010	PJJ		
APRIL 2011	PJJ		
MAY 2011	PJJ		

LILA CANYON MINE

SURFACE AREA
Official Disturbed Boundary Map

DATE: January 2008 | DESIGNED BY: R. Jay Marshall
SCALE: AS SHOWN | PLATE #: 5-2

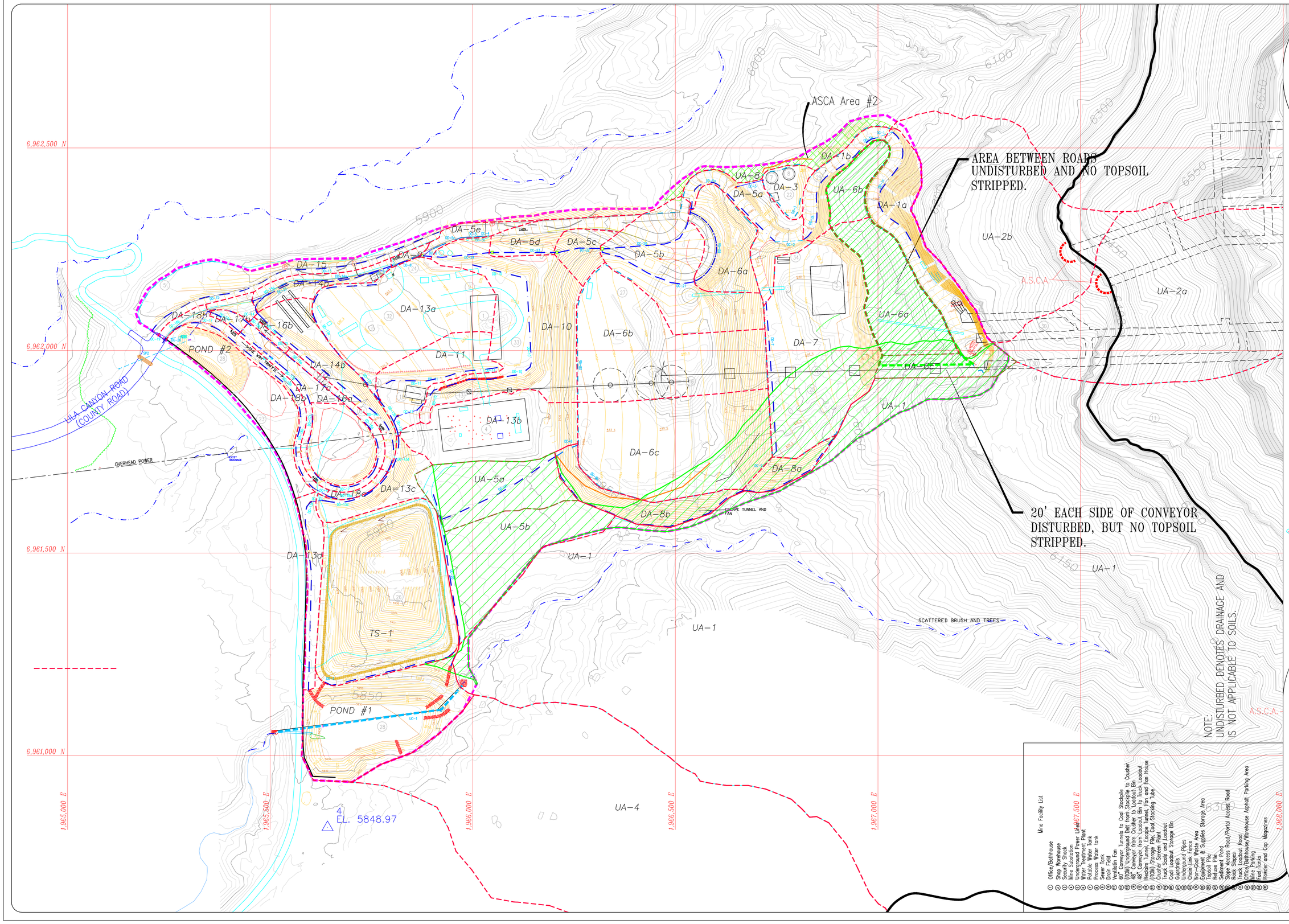

Mine Facility List

1. Office/Bathhouse
2. Shop Warehouse
3. Security Shack
4. Mine Substation
5. Underground Power Line
6. Water Equipment Pump
7. Potable Water Tank
8. Process Water tank
9. Sewer Tank
10. Diesel Fuel
11. Ventilatin Fan
12. 60" Conveyor Tunnels to Coal Stockpile
13. (ROM) Underground Belt from Stockpile to Crusher
14. 48" Conveyor from Crusher to Loadout Bin
15. Reclaim Tunnel, Escape Tunnel, Fan and Fan House
16. (ROM) Storage Pile, Coal Stocking Tube
17. Crusher Screen Plant
18. Truck Scale and Loadout
19. Coal Loadout Storage Bin
20. Guardrails
21. Underground Pipes
22. Chain Link Fence
23. Non-Coal Waste Area
24. Equipment & Supplies Storage Area
25. Topsoil Pile
26. Refuse Pile
27. Sediment Pond
28. Upper Access Road/Portal Access Road
29. Rock Slopes
30. Truck Loadout Road
31. Office/Bathhouse/Warehouse Asphalt Parking Area
32. Gate Parking
33. Fuel Tanks
34. Powder and Cap Magazines

LILA CANYON MINE

DISTURBED AREA HYDROLOGY AND WATERSHED MAP

DATE:	DESIGNED:	PLATE #
January 2008	R. Jay Marshall	7-2
SCALE: AS SHOWN		

UTAH REGISTERED PROFESSIONAL ENGINEER #152606 R. Jay Marshall

REVISION DATE:

DATE:	BY:	DATE:	BY:
JAN 2008	RJM	Aug. 2014	PJJ
APR 2008	TJS	Dec. 2014	RJM
JUL 2008	TJS		
JUN 2009	TJS		
JAN 2010	TJS		
Dec 2010	RJM		
Nov. 2013	PJJ		

R 14 E, T 16 S
OFF-SITE FOOTPRINT:

1" = 2000'

LEGEND:

- UNDISTURBED WITHIN THE DISTURBED AREA
- DISTURBED AREA BOUNDARY:
- NATURAL DRAINAGE:
- 6' HIGH CHAIN LINK FENCE
- INCIDENTAL ROCK DISTRIBUTION:
- STREAM BUFFER ZONE SIGNS
- STRUCTURAL FILL:
- TEMP. REFUSE PILE (COAL MINE WASTE):
- TOPSOIL BERM:
- Stream Buffer Zone
- Berm
- Ditch
- Culvert
- WS Bound

NOTES:

(1) REFER TO PLATE 5-7AAB FOR CROSS-SECTIONS.

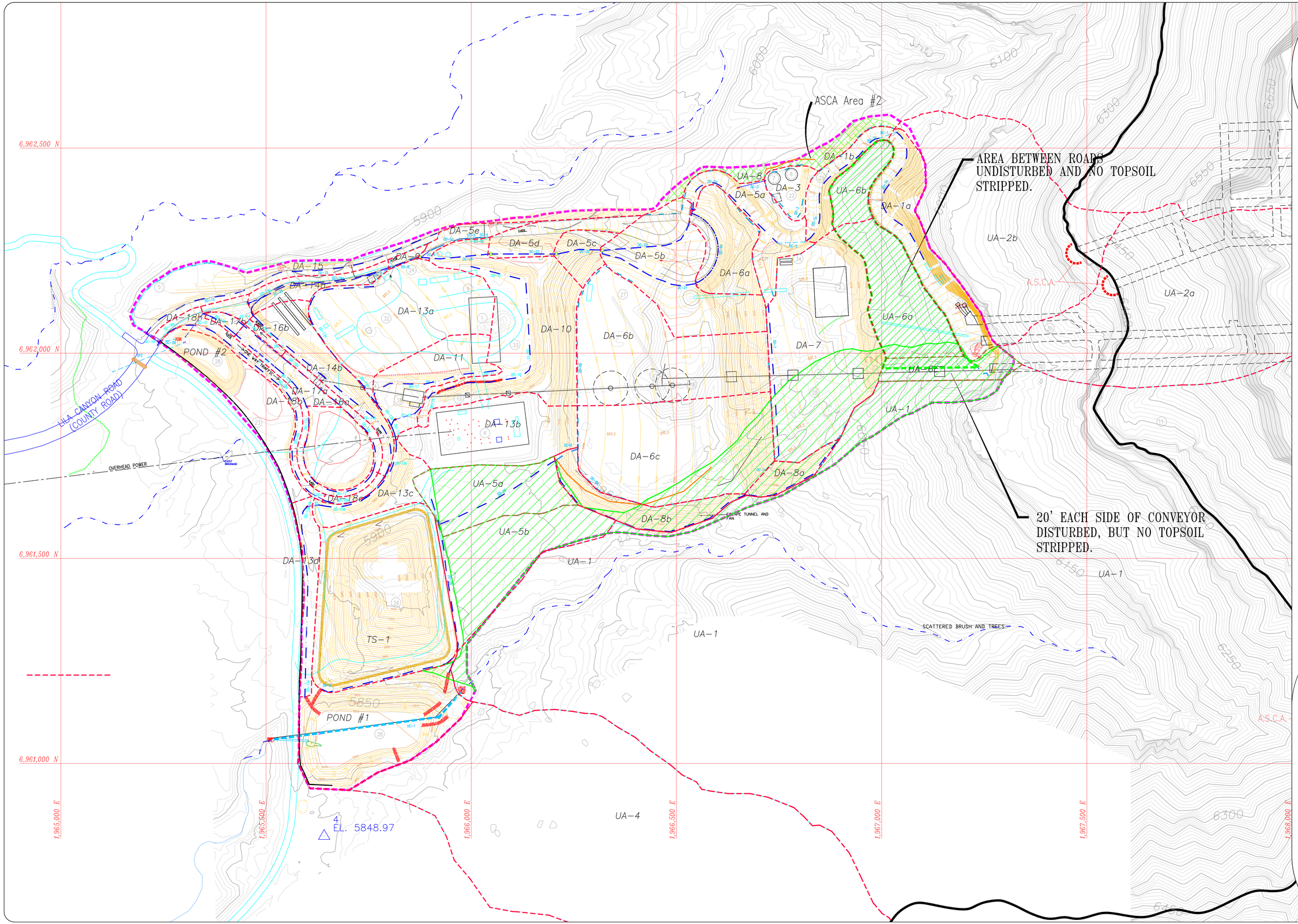

LILA CANYON MINE

PROPOSED SEDIMENT CONTROL

DATE:	DRAWN BY:	PLATE #:
JUNE 1998	BLACKHAWK ENG.	7-5
SCALE: AS SHOWN		

UTAH REGISTERED PROFESSIONAL ENGINEER #152606 R. Jay Marshall

REVISION DATE:

DATE	BY	DATE	BY	DATE	BY
OCT 1998	WJ	NOV 2003	RJM	JAN. 2012	PJJ
JAN 1999	WJ	JAN 2005	RJM	NOV. 2013	PJJ
MAR 2000	BHE	APR 2008	TJS	OCT. 2014	TJS
SEP 2000	BHE	JUL 2008	TJS	DEC. 2014	RJM
JAN 2001	BHE	JUN 2009	TJS		
MAR 2001	BJ	JAN 2010	TJS		
NOV 2002	RJM	Dec 2010	RJM		

NOTE:
UNDISTURBED DENOTES DRAINAGE AND IS NOT APPLICABLE TO SOILS.

R 14 E, T 16 S

N

50' 0' 100' 200'

LEGEND:

- UNDISTURBED WITHIN THE DISTURBED AREA
- DISTURBED AREA BOUNDARY:
- NATURAL DRAINAGE:
- 6' HIGH CHAIN LINK FENCE
- INCIDENTAL ROCK DISTRIBUTION:
- STREAM BUFFER ZONE SIGNS
- STRUCTURAL FILL:
- TEMP. REFUSE PILE (COAL MINE WASTE):
- TOPSOIL BERM:
- Stream Buffer Zone
- Berm
- Ditch
- Culvert
- WS Bound

NOTES:
(1) REFER TO PLATE 5-7A&B FOR CROSS-SECTIONS.

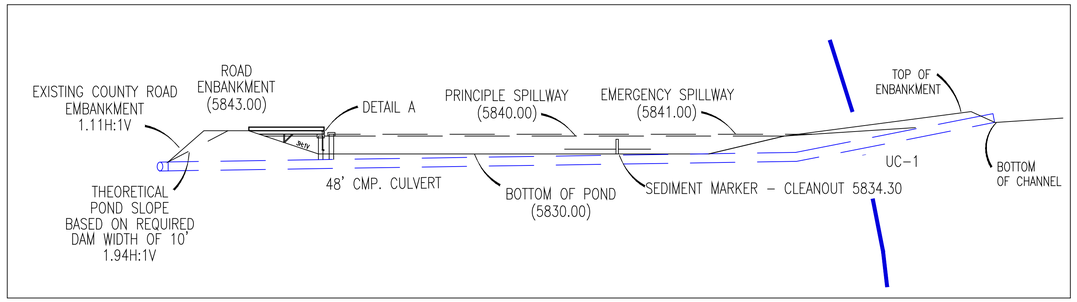

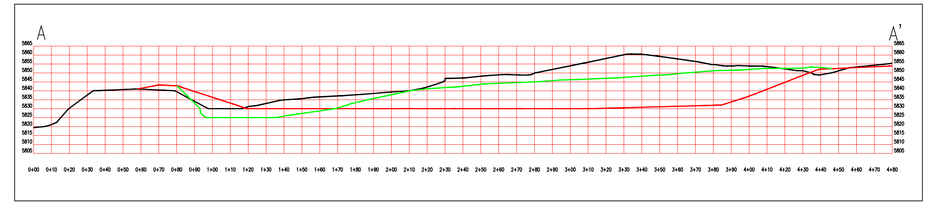

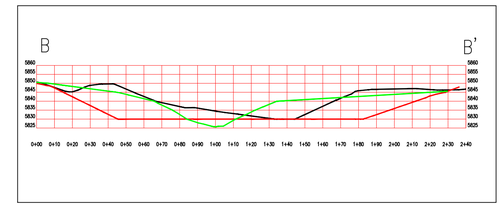

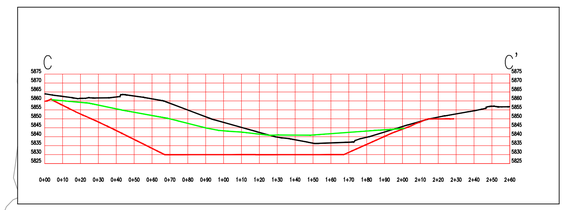

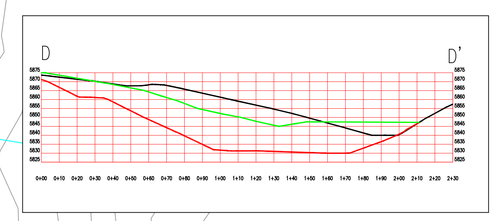

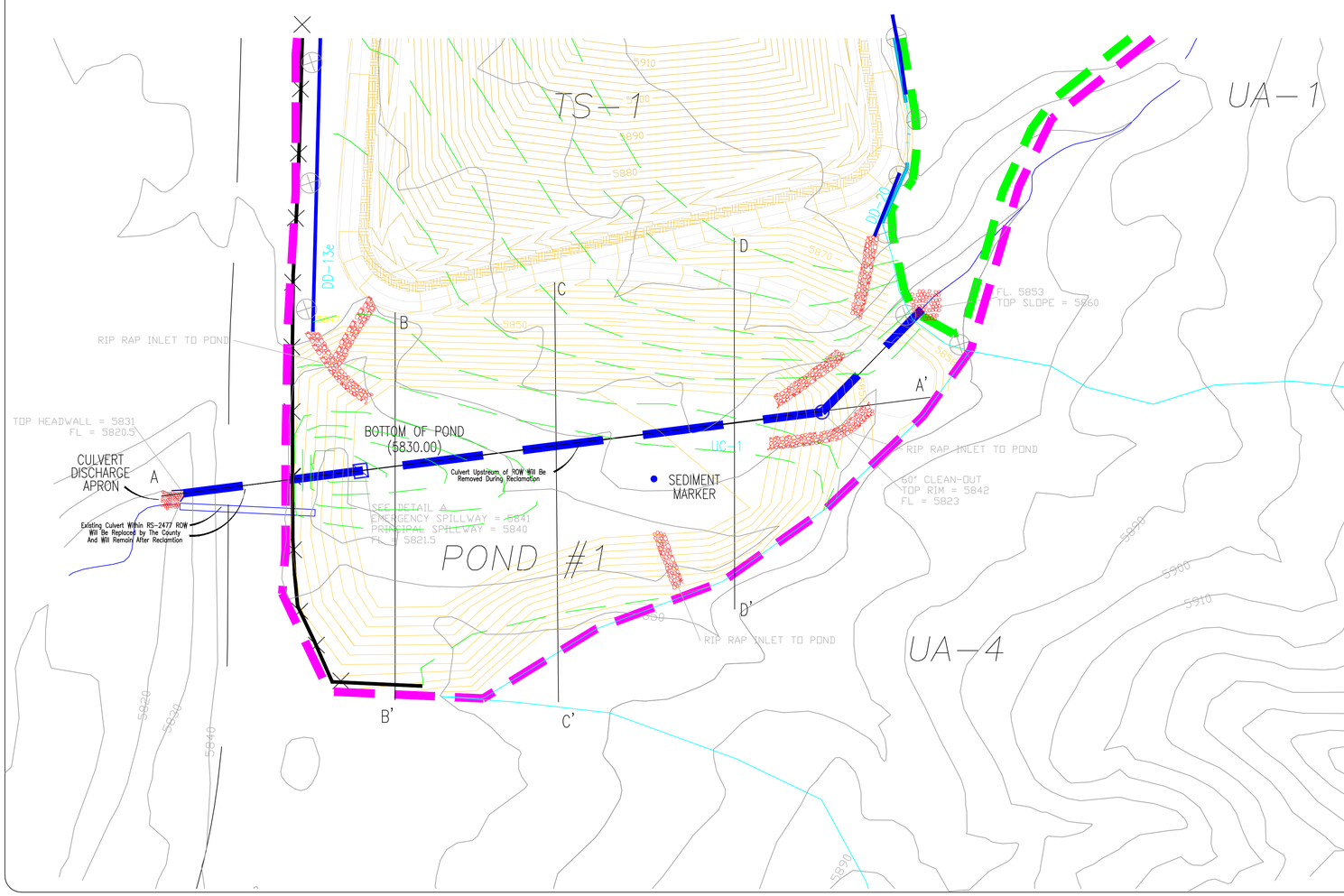

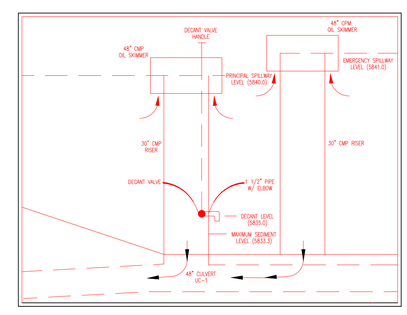

DETAIL A

PROPOSED SURFACE:

EXISTING SURFACE:

RECLAIMED SURFACE:

R 14 E, T 16 S

LEGEND:

PROPOSED CONTOURS:

EXISTING CONTOURS:

RECLAIMED CONTOURS:

DISTURBED AREA BOUNDARY:

UNDISTURBED AREA BOUNDARY:

LILA CANYON MINE

PROPOSED SEDIMENT POND #1

DATE: APRIL 2008 | DESIGNED BY: HYDROLOGIC DESIGN

SCALE: AS SHOWN | PLATE #: 7-6a

UTAH REGISTERED PROFESSIONAL ENGINEER #152606 R. Jay Marshall

REVISION DATE:

DATE:	BY:	DATE:	BY:
Apr. 2008	TJS		
Dec. 2014	RJM		

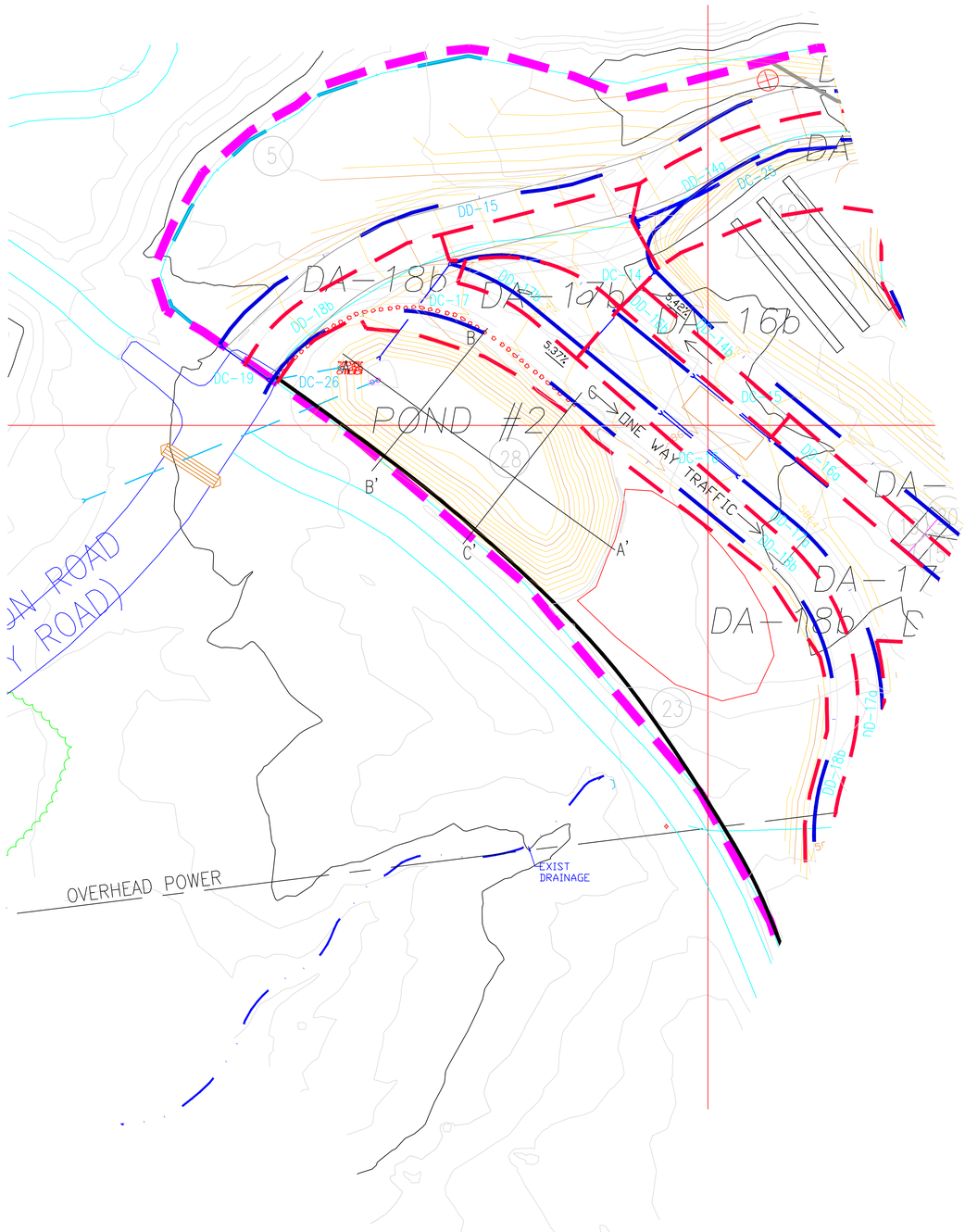

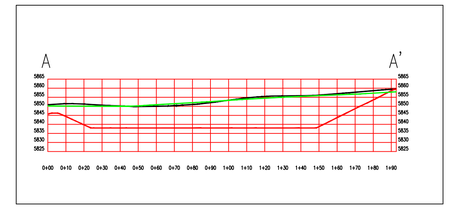

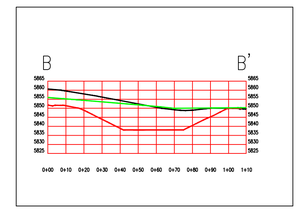

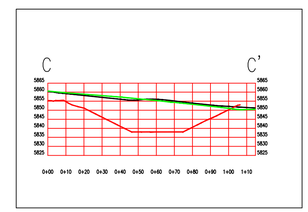

PROPOSED SURFACE:

EXISTING SURFACE:

RECLAIMED SURFACE:

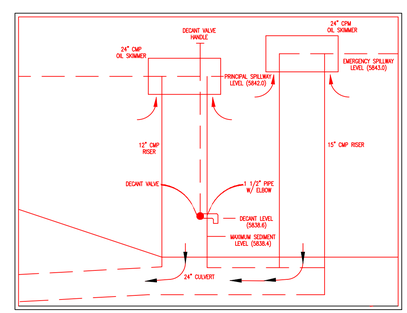

DETAIL A

LILA CANYON MINE

PROPOSED SEDIMENT POND #2

DATE: APRIL 2008 | SECT: HYDROLOGIC DESIGN | PART: 7-6b

SCALE: AS SHOWN

REGISTERED PROFESSIONAL ENGINEER #152806 R. Jay Marshall UTAH

REVISION DATE:

DATE:	BY:	DATE:	BY:
Apr 2008	TJS		
Dec 2014	RJM		

R 14 E, T 16 S

20' 0' 40' 80'

LEGEND:

PROPOSED CONTOURS:

EXISTING CONTOURS:

RECLAIMED CONTOURS:

DISTURBED AREA BOUNDARY:

UNDISTURBED AREA BOUNDARY: