C/007/016 Incoming

#5271

Chris D. Hansen
Dir. Of Regulatory Compliance
225 North 5th Street, Suite 900
Grand Junction, CO 81501
(970) 261-1425
Fax (970) 263-5161

September 6, 2016

Mr. Daron R. Haddock, Coal Environmental Manager
Division of Oil, Gas, and Mining
P.O. Box 145801
Salt Lake City, Utah 84114-5801

RECEIVED
SEP 07 2016
DIV. OF OIL, GAS & MINING

RE: Submittal of Repair Plans and As-Builts of the Repaired Reclamation Channel SD-6, Gordon Creek 2, 7, and 8 Mines, Permit # C/007/0016, Task ID #5189

Dear Mr. Haddock:

Please find enclosed with this letter completed copies of C1 and C2 forms, four clean copies of added text, Plate 3-13, and the addendum to Appendix 7-1 that contains the "Plan for Repair of Reclamation Channel SD-6 at the Gordon Creek 2, 7, 8 Mines, Carbon County, Utah", the "Revised Plan for Repair of Reclamation Channel SD-6 at the Gordon Creek 2, 7, 8 Mines, Carbon County, Utah", and a letter report titled "Gordon Creek Channel SD-6 As-Built Information". I have also included two copies of redline/strikethrough text for Section 3.6 and the updated note for the addendum. This information and permit text modification is being provided in response to Task ID 5189, the Division's review of and deficiencies with a submittal made by Bowie Resources Partners, LLC in May 2016.

Changes to the text of new Section 3.6 Repair of Ditches and Channels Post Reclamation 2015 initially submitted in May 2016 include updating a description of the storm event that exceeded the required ditch designs and total disturbed acreage resulting from the repairs. Also included with this submittal the updated Addendum to Appendix 7-1 originally submitted in May 2016. The addendum includes the two plans for the diversion repair; the initial October 2014 plan for repair of SD-6 as well as the second November 2015 repair plan. Also included is the as-built report for the repair of SD-6.

Finally, the submittal includes copies of updated Plate 3-13 "2015 Channel Repair Disturbance Areas, Gordon Creek 2/7/8 Mines." This plate was updated to correctly illustrate the areas of actual disturbance that took place in 2015. The original plate submitted in May 2016 contained some mistakes that were made when the survey crew missed a section of disturbance. There was some confusion between the survey results and the in-field measurements that resulted in some areas being incorrectly illustrated or left off of the original plate. The corrections did not significantly increase the size of the area disturbed as part of the ditch and channel repairs.

The information provided by EarthFax Engineering Group, LLC (EarthFax) in their first repair plan includes a calculation of the storm event that caused the ditch and channel issues. The calculations are based on field measurements of the high water marks in SD-6 that were still plainly visible after the storm event. Mr. Richard White of EarthFax calculated the runoff event was several times the maximum event required for reclamation ditch design. Because the event was greater than what reclamation ditches at the site are required to transmit, we believe restarting the 10-year reclamation bond clock on the disturbed areas is not appropriate. We would be happy to discuss a more appropriate time period for final bond release.

The four packets of revised or new permit text have been put together with colored sheets separating different sections. Blue sheets have been used to divide individual permit pages while pink sheets have been used to divide sections of the Addendum to Appendix 7-1. Also, the two copies of redlined text have a blank blue coversheet. If this submittal is approved as is, I would recommend discarding the blue cover sheets for the MRP text but keeping the blue coversheet and pink divider sheets for the addendum.

If you have any questions regarding the information provided in this letter, please give me a call at (970) 261-1425.

Sincerely,

Chris D. Hansen
Director of Regulatory Compliance
Bowie Resource Partners, LLC

APPLICATION FOR COAL PERMIT PROCESSING

Permit Change ☒ New Permit ☐ Renewal ☐ Exploration ☐ Bond Release ☐ Transfer ☐

Permittee: Canyon Fuel Company, LLC
Mine: Gordon Creek 2, 7 & 8 Mines **Permit Number:** C/007/0016
Title: Resubmittal of As-Builts of the Repaired Reclamation Channel SD-6 September 2016
Description, Include reason for application and timing required to implement:
Respond to Division's review and deficiencies noted in second submittal of SD-6 as-builts

Instructions: If you answer yes to any of the first eight (gray) questions, this application may require Public Notice publication.

☐ Yes ☒ No 1. Change in the size of the Permit Area? Acres: _____ Disturbed Area: _____ ☐ increase ☐ decrease.
☐ Yes ☒ No 2. Is the application submitted as a result of a Division Order? DO# _____
☐ Yes ☒ No 3. Does the application include operations outside a previously identified Cumulative Hydrologic Impact Area?
☐ Yes ☒ No 4. Does the application include operations in hydrologic basins other than as currently approved?
☐ Yes ☒ No 5. Does the application result from cancellation, reduction or increase of insurance or reclamation bond?
☐ Yes ☒ No 6. Does the application require or include public notice publication?
☐ Yes ☒ No 7. Does the application require or include ownership, control, right-of-entry, or compliance information?
☐ Yes ☒ No 8. Is proposed activity within 100 feet of a public road or cemetery or 300 feet of an occupied dwelling?
☐ Yes ☒ No 9. Is the application submitted as a result of a Violation? NOV # _____
☐ Yes ☒ No 10. Is the application submitted as a result of other laws or regulations or policies?
Explain: _____
☐ Yes ☒ No 11. Does the application affect the surface landowner or change the post mining land use?
☐ Yes ☒ No 12. Does the application require or include underground design or mine sequence and timing? (Modification of R2P2)
☐ Yes ☒ No 13. Does the application require or include collection and reporting of any baseline information?
☐ Yes ☒ No 14. Could the application have any effect on wildlife or vegetation outside the current disturbed area?
☐ Yes ☒ No 15. Does the application require or include soil removal, storage or placement?
☐ Yes ☒ No 16. Does the application require or include vegetation monitoring, removal or revegetation activities?
☐ Yes ☒ No 17. Does the application require or include construction, modification, or removal of surface facilities?
☒ Yes ☐ No 18. Does the application require or include water monitoring, sediment or drainage control measures?
☒ Yes ☐ No 19. Does the application require or include certified designs, maps or calculation?
☐ Yes ☒ No 20. Does the application require or include subsidence control or monitoring?
☐ Yes ☒ No 21. Have reclamation costs for bonding been provided?
☐ Yes ☒ No 22. Does the application involve a perennial stream, a stream buffer zone or discharges to a stream?
☐ Yes ☒ No 23. Does the application affect permits issued by other agencies or permits issued to other entities?

Please attach four (4) review copies of the application. If the mine is on or adjacent to Forest Service land please submit five (5) copies, thank you. (These numbers include a copy for the Price Field Office)

I hereby certify that I am a responsible official of the applicant and that the information contained in this application is true and correct to the best of my information and belief in all respects with the laws of Utah in reference to commitments, undertakings, and obligations, herein.

Chris D. Hansen
Print Name

Chris D. Hansen Proj. Mgr 9-6-16
Sign Name, Position, Date

Subscribed and sworn to before me this 6th day of Sept, 2016

Kathleen Atwood
Notary Public

My commission Expires: 12-02-2019
Attest: State of Utah } ss:
County of Carbon

KATHLEEN ATWOOD
NOTARY PUBLIC • STATE OF UTAH
COMMISSION# 686430
COMM. EXP. 12-02-2019

For Office Use Only:	Assigned Tracking Number:	Received by Oil, Gas & Mining
		RECEIVED SEP 07 2016 DIV. OF OIL, GAS & MINING

Form DOGM- C1 (Revised March 12, 2002)

APPLICATION FOR COAL PERMIT PROCESSING
Detailed Schedule Of Changes to the Mining And Reclamation Plan

Permittee: Canyon Fuel Company, LLC
Mine: Gordon Creek 2, 7 & 8 Mines **Permit Number:** C/007/0016
Title: Resubmittal of As-Builts of the Repaired Reclamation Channel SD-6 September 2016

Provide a detailed listing of all changes to the Mining and Reclamation Plan, which is required as a result of this proposed permit application. Individually list all maps and drawings that are added, replaced, or removed from the plan. Include changes to the table of contents, section of the plan, or other information as needed to specifically locate, identify and revise the existing Mining and Reclamation Plan. Include page, section and drawing number as part of the description.

			DESCRIPTION OF MAP, TEXT, OR MATERIAL TO BE CHANGED
☒ Add	☐ Replace	☐ Remove	Add "Plan for Repair of Reclamation Channel SD-6 at the Gordon Creek 2, 7, 8 Mines, Carbon County, Utah", "Revised Plan for Repair of Reclamation Channel SD-6 at the Gordon Creek 2, 7, 8 Mines, Carbon County, Utah", and a letter report titled "Gordon Creek Channel SD-6 As-Built Information", and cover sheets to back of Addendum to Appendix 7-1
☒ Add	☐ Replace	☐ Remove	Add page to Chapter 3 Table of Contents
☐ Add	☐ Replace	☐ Remove	Add new Section 3.6 containing pages 3- 78 through 3-81
☐ Add	☐ Replace	☐ Remove	Add Plate 3-13 2015 Channel Repair Disturbance Areas
☐ Add	☐ Replace	☐ Remove	
☐ Add	☐ Replace	☐ Remove	
☐ Add	☐ Replace	☐ Remove	
☐ Add	☐ Replace	☐ Remove	
☐ Add	☐ Replace	☐ Remove	
☐ Add	☐ Replace	☐ Remove	
☐ Add	☐ Replace	☐ Remove	
☐ Add	☐ Replace	☐ Remove	
☐ Add	☐ Replace	☐ Remove	
☐ Add	☐ Replace	☐ Remove	
☐ Add	☐ Replace	☐ Remove	
☐ Add	☐ Replace	☐ Remove	
☐ Add	☐ Replace	☐ Remove	
☐ Add	☐ Replace	☐ Remove	
☐ Add	☐ Replace	☐ Remove	
☐ Add	☐ Replace	☐ Remove	
☐ Add	☐ Replace	☐ Remove	
☐ Add	☐ Replace	☐ Remove	
☐ Add	☐ Replace	☐ Remove	
☐ Add	☐ Replace	☐ Remove	
☐ Add	☐ Replace	☐ Remove	
☐ Add	☐ Replace	☐ Remove	

Any other specific or special instruction required for insertion of this proposal into the Mining and Reclamation Plan.	Received by Oil, Gas & Mining RECEIVED SEP 07 2016 DIV. OF OIL, GAS & MINING

Form DOGM - C2 (Revised March 12, 2002)

3.6 Repair of Ditches and Channels Post-Reclamation 2015

A significant precipitation event occurred in September 2014 within the Gordon Creek drainage, including the Gordon Creek tributaries within the Gordon Creek 2, 7 and 8 Mines area. This rainfall event resulted in the displacement of rip and erosions of sections of reclamation channels SD-4, SD-6 and the main Bryner Canyon creek channel below the confluence of the left and right forks as well as a section below the confluence of the creek channel with SD-6. Since the mine is in reclamation, no weather station is maintained at the site. However, evidence of the depth and width of flood flows within the reclamation channels suggested the storm event was greater than the ~~required design flow. Similar damage occurred at other active and reclaimed sites in the Book Cliffs coal fields.~~approved permit design flow.

The damage to the channels was discovered in October 2014, too late to effectively reconstruct the channels due to snow cover and frozen ground. The operator did manage to place temporary silt fences in select locations to control erosion through the winter and spring.

~~Repairs~~Mr. Richard White of the Earth Fax Engineering Group, LLC, was contracted to determine the storm flow that caused the damage to the channels and create the repair plan for an earthmoving contractor to implement. Mr. White visited the site in October 2014 to obtain evidence of the high runoff flows in SD-6 and calculate the maximum flow that discharged through the channel. Mr. White concluded the storm flow that eroded SD-6 was 137 cfs, greatly exceeding the 7.08 cfs 100-year, 6-hour precipitation event the channel was designed to transmit. It is reasonable to assume that flows exceeding the design flows of SD- 4 and the reclaimed portions of Bryner Canyon creek also occurred as a result of the same storm event. A copy of Mr. White's report, "Plan for Repair of Reclamation Channel SD-6 at the Gordon Creek 2, 7, 8 Mine, Carbon County, Utah" that contains his storm flow calculations and initial repair designs for SD-6 is included in the Addendum to Appendix 7-1. This addendum also includes EarthFax's "Revised Plan for Repair of Reclamation Channel SD-6 at the Gordon Creek 2, 7, 8 Mine, Carbon County, Utah", the updated designs for a follow-up repair of the lower portion of SD-6 that took place in the fall of 2015. This second repair is discussed in greater detail later in this section.

Initial repairs to the reclaimed channels were initiated in June 2015. After reviewing the approved channel designs of the affected channels and determining the magnitude of the storm event, Mr. White determined the storm runoff exceeded the required event design and no redesign of the channels were necessary ~~All~~ Therefore, the channel repairs were done in accordance with the existing approved permit. The contractor replaced filter material and rip rap in the reclaimed section of Bryner Canyon creek from a point below the confluence of the main channel with the Right Fork of Bryner Canyon downstream to the confluence of the main channel with channel SD-4. Similar repairs were performed on the lower sections of SD-4. Also, the majority of channel SD-6 was repaired with new filter material and riprap. Finally, a short section of the main Bryner Canyon creek channel within the area of the now-reclaimed ~~upper~~ Gordon Creek 2, 7 and 8 sediment ponds was repaired by replacing filter material and riprap.

The contractor transported filter material and riprap from their borrow areas to the county road turnaround~~.~~, located just east of the reclaimed sediments pond area. The contractor created access from the boundary gate to channel SD-6 via a temporary road by ~~temporarily~~ removing topsoil and vegetation and windrowing it on the north side of the temporary road. This work was accomplished using a large rubber tired front-end loader. Ten-wheel end-dump trucks were loaded at the county road turnaround with filter material and riprap and the material was then transported to the SD-6 channel area~~. From this location~~ and dumped. A front-end loader was used to pick-up and transfer the filter material and riprap ~~that was~~ used in the repair of the upper section of the main Bryner Canyon creek and SD-4 channels ~~were transported to those repaired sections using the front-end loader~~. A trackhoe excavator was used to place material in the repaired channel sections.

After repair of the upper section of the main Bryner Canyon creek and SD-4 channels, the trackhoe retreated to the SD-6 channel area. Those areas where minor disturbance was created by the travel of the trackhoe and front-end loader were deep gouged, seeded by hand broadcasting, and weed-free straw crimped into the soils using the trackhoe bucket. Copies of the seed mix tag and a tag from one of the certified weed-free straw bales used in the repair efforts is included at the end of this section.

Following the reconstruction of SD-6, the trackhoe was used to replace the topsoil previously removed to create the temporary access road, deep gouge the disturbed areas, and crimp straw into the soils following seeding. The row of large rocks that were originally piled west of the gate at the end of the county road to impede vehicle access were replaced.

A second significant rainfall event occurred in the late summer of 2015 that resulted in the lower portion of the SD-6 channel being eroded and riprap displaced. EarthFax Engineering Group, LLC was employed to evaluate the original channel design and recommend any changes as necessary. The ~~results~~result of their evaluation ~~are~~, "Revised Plan for Repair of Reclamation Channel SD-6 at the Gordon Creek 2, 7, 8 Mine, Carbon County, Utah", is included as an Addendum to Appendix 7- 1. ~~It~~The most significant recommendation made by EarthFax to the channel design was ~~determined~~ that ~~two layers~~a second layer of coarser filter material ~~would~~ (D_{50} equal to 1.5-inches) should be ~~required~~placed on top of a finer filter material (D_{50} equal to 0.25-inches) before placement of ~~riprap with a~~ D_{50} equal to 18-inches riprap. This additional layer of filter material was added to improve the stability of the rip rap.

The repair work on the SD-6 channel was completed by November 2015. Similar to the repair work completed in June of 2015, a temporary access road was constructed from the gate to SD-6 by removing the topsoil using a rubber-tired front-end loader. Again, material was staged from the county road turnaround to the channel using ten-wheel end dump trucks and the front-end loader. A trackhoe excavator was used to place and compact the filter and riprap material. The trackhoe was used to reclaim the temporary road using the same methods employed during the June 2015 repair work.

The areas disturbed and reclaimed as part of the channel repair efforts in 2015 are illustrated on Plate 3-13, titled "2015 Channel Repair Disturbed Areas". Plate 3-13 was created by combining survey data obtained at the mine in May 2016 using survey-grade GPS equipment~~, AutoCAD and Google Maps. The areas of disturbance have been divided into six areas.~~ with a Google Maps generated base map. In August 2016, the map was field checked, corrected, and updated. These corrections included adding additional areas that were overlooked in the initial GPS survey and modifying the plate to more closely depict areas actually disturbed during channel repair activities. The disturbance is divided into nine areas. The areas are described as follows:

Area 1 – Road between rock barrier behind gate to SD-6
Area 2 – Staging and access area east side of SD-6
Area 3 – Access area west side of SD-6
Area 4 – Access Trail between SD-6 and SD-4
Area 5 - Staging and access area for confluence of Bryner Canyon and SD-4
Area 6 – Access Trail from SD-4 to confluence of Bryner Canyon and Right Fork of Bryner Canyon (Area 7)
Area 7 – Trackhoe and Front-end Loader access areas at end of Area 6
Area 8 – Staging and access area for Bryner Canyon
Area 9 – Trackhoe and Front-end Loader access to Area 8

Below is a table listing the calculated disturbance ~~area~~ acreages per the areas described above. The sizes of ~~Areas 2, 3, 5 and 7~~the areas were determined using a combination of survey data ~~and~~, AutoCAD area calculations~~. Areas 1, 4~~, and ~~6 were determined using the May 2015 survey data and~~ field measurements.

AREA	LENGTH X AVERAGE WIDTH (ft)	SQ FT	ACREAGE
1	345 X 20	6900	0.158
2	N/A	~~3090~~3335	0.~~071~~077
3	N/A	~~1626~~1225	0.~~037~~028
4	1289 X 17	21913	0.503
5	N/A	~~4286~~2130	0.~~098~~049
6	375 X 10	3750	0.086
7	N/A	3845	0.088
8	N/A	2071	0.048
9	135 X 14	1890	0.043
TOTAL			1.~~041~~080

The total reclaimed disturbed acreage for the Gordon Creek 2, 7 and 8 Mines is 34.15 acres. The total acreage related to the channel repairs completed in 2015 is 1.~~041~~080 acres, or approximately 3.2 percent of the total reclaimed acreage. It is important to note the disturbed acreages shown in the table do not include the width and length of the channels repaired. Since the work completed in the actual channels did not include disturbance of topsoil and there is no reclamation vegetation standard for the channels themselves, these areas were not considered as "new" disturbance in the calculations.

After discussions with Division staff, the operator has agreed to spread seed in the repaired sections of the reconstructed channels to encourage vegetative growth that could aid in stabilizing the riprap. This seeding will occur in the fall of 2016. Also, as per Section 3.5.5.2 "Seeding Method" of this permit, appropriate containerized plants will be placed at 50-foot intervals adjacent to the repaired reclaimed channel SD-6.

Below is a copy of the seed mix that was used during the 2015 channel repair efforts. The mix includes seed that was available at the time of repair. Adequate seed from the first repair activity remained for

use during the second repair work activity. Seeding in the fall of 2016 will consist of using available seeds as listed in the approved reclamation seed mix identified in Table 3-3 of Section 3.5.5.2.

Gordon Creek 2/7/8

Purity	Mixture Contents	Origin	Germ/Hard
10.62%	Basin Wildrye, Trailhead	OR	94%
9.66%	Streambank Wheatgrass, sodar	WA	94%
9.11%	Slender Wheatgrass, First Strike	WA	96%
8.35%	Blue Elderberry, VNS	UT	45%
6.09%	Annual Sunflower, Native	UT	82%
6.01%	Antelope Bitterbrush, VNS	NV	83%
5.80%	Bluegrass, Kentucky, Parkland	WA	86%
5.54%	Indian Ricegrass, Rimrock	WA	90%
5.48%	Snake River Wheatgrass, Secar	WA	91%
5.31%	Cicer Milkvetch, VNS	MT	94%
4.11%	Curlleaf Mahogany, VNS	UT	81%
2.80%	Utah Northern Sweetvetch, Timp	CO	89%
2.71%	Alfalfa, Ladak	MT	92%
2.63%	Mountain Snowberry	UT	95%
1.26%	Prairie Aster, VNS	UT	53%
0.89%	Rocky Mountain Penstemon, Bandera	OR	93%
0.41%	Mountain Big Sagebrush, VNS	NV	82%

0.21% Crop
12.85% Inert
0.16% Weed,
No Noxious Found

Oldest Test Date: 9/29/2014

Nelco Inc.
4520 South 100 West
Price, UT 84501

PO #8216
Lot #29231
Net Weight 30.06 Lbs.

Below is a copy of a typical tag removed from the bales of the weed-free straw that was used for mulch during the reseeding process.

ADDENDUM TO APPENDIX 7-1

NOTE

Three~~An~~ a~~A~~ddendums to Appendix 7-1 ~~is~~ are located at the end of this appendix and ~~is~~ titled "~~Revised~~ Plan for Repair of Reclamation Channel SD-6 at the Gordon Creek 2, 7, 8 Mines, Carbon County, Utah", "Revised Plan for Repair of Reclamation Channel SD-6 at the Gordon Creek 2, 7, 8 Mines, Carbon County, Utah", and a letter report titled "Gordon Creek Channel SD-6 As-Built Information". The first addendum is the repair plan was prepared in November 2014 by EarthFax Engineering Group, LLC and includes the calculations for the storm event flows resulted in erosion of portions of reclaimed channels and diversions. The second addendum is dated October 2015 and includes the second repair plan for the lower section of SD-6. Finally, the third addendum contains the as-built evaluation information for the lower section of SD-6 and is dated December 21, 2015.

~~This~~ The addendum to Appendix 7-1, "Revised Plan for Repair of Reclamation Channel SD-6 at the Gordon Creek 2, 7, 8 Mines, Carbon County, Utah", is intended to be read as an addition to the original designs to reclamation channel SD-6. This redesign is specific to the lower section of SD-6 where erosion of the channel has occurred on two occasions, once following an apparent greater-than-design storm event in the fall of 2014 and a second event that occurred after repairs were completed in the summer of 2015. This redesign is not intended to be implemented at any other reclamation channel at the Gordon Creek Mines.

APPLICATION FOR COAL PERMIT PROCESSING
Detailed Schedule Of Changes to the Mining And Reclamation Plan

Permittee: Canyon Fuel Company, LLC
Mine: Gordon Creek 2, 7 & 8 Mines **Permit Number:** C/007/0016
Title: Resubmittal of As-Builts of the Repaired Reclamation Channel SD-6 September 2016

Provide a detailed listing of all changes to the Mining and Reclamation Plan, which is required as a result of this proposed permit application. Individually list all maps and drawings that are added, replaced, or removed from the plan. Include changes to the table of contents, section of the plan, or other information as needed to specifically locate, identify and revise the existing Mining and Reclamation Plan. Include page, section and drawing number as part of the description.

			DESCRIPTION OF MAP, TEXT, OR MATERIAL TO BE CHANGED
☒ Add	☐ Replace	☐ Remove	Add "Plan for Repair of Reclamation Channel SD-6 at the Gordon Creek 2, 7, 8 Mines, Carbon County, Utah", "Revised Plan for Repair of Reclamation Channel SD-6 at the Gordon Creek 2, 7, 8 Mines, Carbon County, Utah", and a letter report titled "Gordon Creek Channel SD-6 As-Built Information", and cover sheets to back of Addendum to Appendix 7-1
☒ Add	☐ Replace	☐ Remove	Add page to Chapter 3 Table of Contents
☐ Add	☐ Replace	☐ Remove	Add new Section 3.6 containing pages 3- 78 through 3-81
☐ Add	☐ Replace	☐ Remove	Add Plate 3-13 2015 Channel Repair Disturbance Areas
☐ Add	☐ Replace	☐ Remove	
☐ Add	☐ Replace	☐ Remove	
☐ Add	☐ Replace	☐ Remove	
☐ Add	☐ Replace	☐ Remove	
☐ Add	☐ Replace	☐ Remove	
☐ Add	☐ Replace	☐ Remove	
☐ Add	☐ Replace	☐ Remove	
☐ Add	☐ Replace	☐ Remove	
☐ Add	☐ Replace	☐ Remove	
☐ Add	☐ Replace	☐ Remove	
☐ Add	☐ Replace	☐ Remove	
☐ Add	☐ Replace	☐ Remove	
☐ Add	☐ Replace	☐ Remove	
☐ Add	☐ Replace	☐ Remove	
☐ Add	☐ Replace	☐ Remove	
☐ Add	☐ Replace	☐ Remove	
☐ Add	☐ Replace	☐ Remove	
☐ Add	☐ Replace	☐ Remove	
☐ Add	☐ Replace	☐ Remove	
☐ Add	☐ Replace	☐ Remove	
☐ Add	☐ Replace	☐ Remove	
☐ Add	☐ Replace	☐ Remove	

Any other specific or special instruction required for insertion of this proposal into the Mining and Reclamation Plan.	Received by Oil, Gas & Mining RECEIVED SEP 07 2016 DIV. OF OIL, GAS & MINING

Form DOGM - C2 (Revised March 12, 2002)

3.6 Repair of Ditches and Channels Post-Reclamation 2015 3-78

3.6 Repair of Ditches and Channels Post-Reclamation 2015

A significant precipitation event occurred in September 2014 within the Gordon Creek drainage, including the Gordon Creek tributaries within the Gordon Creek 2, 7 and 8 Mines area. This rainfall event resulted in the displacement of rip and erosions of sections of reclamation channels SD-4, SD-6 and the main Bryner Canyon creek channel below the confluence of the left and right forks as well as a section below the confluence of the creek channel with SD-6. Since the mine is in reclamation, no weather station is maintained at the site. However, evidence of the depth and width of flood flows within the reclamation channels suggested the storm event was greater than the approved permit design flow.

The damage to the channels was discovered in October 2014, too late to effectively reconstruct the channels due to snow cover and frozen ground. The operator did manage to place temporary silt fences in select locations to control erosion through the winter and spring.

Mr. Richard White of the Earth Fax Engineering Group, LLC, was contracted to determine the storm flow that caused the damage to the channels and create the repair plan for an earthmoving contractor to implement. Mr. White visited the site in October 2014 to obtain evidence of the high runoff flows in SD-6 and calculate the maximum flow that discharged through the channel. Mr. White concluded the storm flow that eroded SD-6 was 137 cfs, greatly exceeding the 7.08 cfs 100-year, 6-hour precipitation event the channel was designed to transmit. It is reasonable to assume that flows exceeding the design flows of SD- 4 and the reclaimed portions of Bryner Canyon creek also occurred as a result of the same storm event. A copy of Mr. White's report, "Plan for Repair of Reclamation Channel SD-6 at the Gordon Creek 2, 7, 8 Mine, Carbon County, Utah" that contains his storm flow calculations and initial repair designs for SD-6 is included in the Addendum to Appendix 7-1. This addendum also includes EarthFax's "Revised Plan for Repair of Reclamation Channel SD-6 at the Gordon Creek 2, 7, 8 Mine, Carbon County, Utah", the updated designs for a follow-up repair of the lower portion of SD-6 that took place in the fall of 2015. This second repair is discussed in greater detail later in this section.

Initial repairs to the reclaimed channels were initiated in June 2015. After reviewing the approved channel designs of the affected channels and determining the magnitude of the storm event, Mr. White determined the storm runoff exceeded the required event design and no redesign of the channels were necessary Therefore, the channel repairs were done in accordance with the existing approved permit. The contractor replaced filter material and rip rap in the reclaimed section of Bryner Canyon creek from a point below the confluence of the main channel with the Right Fork of Bryner Canyon downstream to the confluence of the main channel with channel SD-4. Similar repairs were performed on the lower sections of SD-4. Also, the majority of channel SD-6 was repaired with new filter material and riprap. Finally, a short section of the main Bryner Canyon creek channel within the area of the now-reclaimed Gordon Creek 2, 7 and 8 sediment ponds was repaired by replacing filter material and riprap.

The contractor transported filter material and riprap from their borrow areas to the county road turnaround, located just east of the reclaimed sediments pond area. The contractor created access from the boundary gate to channel SD-6 via a temporary road by removing topsoil and vegetation and windrowing it on the north side of the temporary road. This work was accomplished using a large

rubber tired front-end loader. Ten-wheel end-dump trucks were loaded at the county road turnaround with filter material and riprap and the material was then transported to the SD-6 channel area and dumped. A front-end loader was used to pick-up and transfer the filter material and riprap used in the repair of the upper section of the main Bryner Canyon creek and SD-4 channels. A trackhoe excavator was used to place material in the repaired channel sections.

After repair of the upper section of the main Bryner Canyon creek and SD-4 channels, the trackhoe retreated to the SD-6 channel area. Those areas where minor disturbance was created by the travel of the trackhoe and front-end loader were deep gouged, seeded by hand broadcasting, and weed-free straw crimped into the soils using the trackhoe bucket. Copies of the seed mix tag and a tag from one of the certified weed-free straw bales used in the repair efforts is included at the end of this section.

Following the reconstruction of SD-6, the trackhoe was used to replace the topsoil previously removed to create the temporary access road, deep gouge the disturbed areas, and crimp straw into the soils following seeding. The row of large rocks that were originally piled west of the gate at the end of the county road to impede vehicle access were replaced.

A second significant rainfall event occurred in the late summer of 2015 that resulted in the lower portion of the SD-6 channel being eroded and riprap displaced. EarthFax Engineering Group, LLC was employed to evaluate the original channel design and recommend any changes as necessary. The result of their evaluation, "Revised Plan for Repair of Reclamation Channel SD-6 at the Gordon Creek 2, 7, 8 Mine, Carbon County, Utah", is included as an Addendum to Appendix 7- 1. The most significant recommendation made by EarthFax to the channel design was that a second layer of coarser filter material (D_{50} equal to 1.5-inches) should be placed on top of a finer filter material (D_{50} equal to 0.25-inches) before placement of D_{50} equal to 18-inches riprap. This additional layer of filter material was added to improve the stability of the rip rap.

The repair work on the SD-6 channel was completed by November 2015. Similar to the repair work completed in June of 2015, a temporary access road was constructed from the gate to SD-6 by removing the topsoil using a rubber-tired front-end loader. Again, material was staged from the county road turnaround to the channel using ten-wheel end dump trucks and the front-end loader. A trackhoe excavator was used to place and compact the filter and riprap material. The trackhoe was used to reclaim the temporary road using the same methods employed during the June 2015 repair work.

The areas disturbed and reclaimed as part of the channel repair efforts in 2015 are illustrated on Plate 3-13, titled "2015 Channel Repair Disturbed Areas". Plate 3-13 was created by combining survey data obtained at the mine in May 2016 using survey-grade GPS equipment with a Google Maps generated base map. In August 2016, the map was field checked, corrected, and updated. These corrections included adding additional areas that were overlooked in the initial GPS survey and modifying the plate to more closely depict areas actually disturbed during channel repair activities. The disturbance is divided into nine areas. The areas are described as follows:

Area 1 – Road between rock barrier behind gate to SD-6
Area 2 – Staging and access area east side of SD-6
Area 3 – Access area west side of SD-6
Area 4 – Access Trail between SD-6 and SD-4

Area 5 - Staging and access area for confluence of Bryner Canyon and SD-4
Area 6 – Access Trail from SD-4 to confluence of Bryner Canyon and Right Fork of Bryner Canyon (Area 7)
Area 7 – Trackhoe and Front-end Loader access areas at end of Area 6
Area 8 – Staging and access area for Bryner Canyon
Area 9 – Trackhoe and Front-end Loader access to Area 8

Below is a table listing the calculated disturbance acreages per the areas described above. The sizes of the areas were determined using a combination of survey data, AutoCAD area calculations, and field measurements.

AREA	LENGTH X AVERAGE WIDTH (ft)	SQ FT	ACREAGE
1	345 X 20	6900	0.158
2	N/A	3335	0.077
3	N/A	1225	0.028
4	1289 X 17	21913	0.503
5	N/A	2130	0.049
6	375 X 10	3750	0.086
7	N/A	3845	0.088
8	N/A	2071	0.048
9	135 X 14	1890	0.043
TOTAL			1.080

The total reclaimed disturbed acreage for the Gordon Creek 2, 7 and 8 Mines is 34.15 acres. The total acreage related to the channel repairs completed in 2015 is 1.080 acres, or approximately 3.2 percent of the total reclaimed acreage. It is important to note the disturbed acreages shown in the table do not include the width and length of the channels repaired. Since the work completed in the actual channels did not include disturbance of topsoil and there is no reclamation vegetation standard for the channels themselves, these areas were not considered as "new" disturbance in the calculations.

After discussions with Division staff, the operator has agreed to spread seed in the repaired sections of the reconstructed channels to encourage vegetative growth that could aid in stabilizing the riprap. This seeding will occur in the fall of 2016. Also, as per Section 3.5.5.2 "Seeding Method" of this permit, appropriate containerized plants will be placed at 50-foot intervals adjacent to the repaired reclaimed channel SD-6.

Below is a copy of the seed mix that was used during the 2015 channel repair efforts. The mix includes seed that was available at the time of repair. Adequate seed from the first repair activity remained for use during the second repair work activity. Seeding in the fall of 2016 will consist of using available seeds as listed in the approved reclamation seed mix identified in Table 3-3 of Section 3.5.5.2.

Gordon Creek 2/7/8

Purity	Mixture Contents	Origin	Germ/Hard
10.62%	Basin Wildrye, Trailhead	OR	94%
9.66%	Streambank Wheatgrass, sodar	WA	94%
9.11%	Slender Wheatgrass, First Strike	WA	96%
8.35%	Blue Elderberry, VNS	UT	45%
6.09%	Annual Sunflower, Native	UT	82%
6.01%	Antelope Bitterbrush, VNS	NV	83%
5.80%	Bluegrass, Kentucky, Parkland	WA	86%
5.54%	Indian Ricegrass, Rimrock	WA	90%
5.48%	Snake River Wheatgrass, Secar	WA	91%
5.31%	Cicer Milkvetch, VNS	MT	94%
4.11%	Curlleaf Mahogany, VNS	UT	81%
2.80%	Utah Northern Sweetvetch, Timp	CO	89%
2.71%	Alfalfa, Ladak	MT	92%
2.63%	Mountain Snowberry	UT	95%
1.26%	Prairie Aster, VNS	UT	53%
0.89%	Rocky Mountain Penstemon, Bandera	OR	93%
0.41%	Mountain Big Sagebrush, VNS	NV	82%

0.21% Crop
12.85% Inert
0.16% Weed,
No Noxious Found

Oldest Test Date: 9/29/2014

Nelco Inc.
4520 South 100 West
Price, UT 84501

PO #8216
Lot #29231
Net Weight 30.06 Lbs.

Below is a copy of a typical tag removed from the bales of the weed-free straw that was used for mulch during the reseeding process.

ADDENDUM TO APPENDIX 7-1

NOTE

Three addendums to Appendix 7-1 are located at the end of this appendix and titled "Plan for Repair of Reclamation Channel SD-6 at the Gordon Creek 2, 7, 8 Mines, Carbon County, Utah", "Revised Plan for Repair of Reclamation Channel SD-6 at the Gordon Creek 2, 7, 8 Mines, Carbon County, Utah", and a letter report titled "Gordon Creek Channel SD-6 As-Built Information". The first addendum is the repair plan was prepared in November 2014 by EarthFax Engineering Group, LLC and includes the calculations for the storm event flows resulted in erosion of portions of reclaimed channels and diversions. The second addendum is dated October 2015 and includes the second repair plan for the lower section of SD-6. Finally, the third addendum contains the as-built evaluation information for the lower section of SD-6 and is dated December 21, 2015.

The addendum to Appendix 7-1, "Revised Plan for Repair of Reclamation Channel SD-6 at the Gordon Creek 2, 7, 8 Mines, Carbon County, Utah", is intended to be read as an addition to the original designs to reclamation channel SD-6. This redesign is specific to the lower section of SD-6 where erosion of the channel has occurred on two occasions, once following an apparent greater-than-design storm event in the fall of 2014 and a second event that occurred after repairs were completed in the summer of 2015. This redesign is not intended to be implemented at any other reclamation channel at the Gordon Creek Mines.

ADDENDUM TO APPENDIX 7-1

PLAN FOR REPAIR OF RECLAMATION CHANNEL SD-6 AT THE GORDON CREEK 2, 7, 8 MINES, CARBON COUNTY, UTAH

Plan for Repair of Reclamation Channel SD-6 at the Gordon Creek 2, 7, 8 Mine, Carbon County, Utah

Bowie Resource Partners, LLC
Grand Junction, Colorado

November 2014

REGISTERED PROFESSIONAL ENGINEER
No. 168246
RICHARD B. WHITE
3 Nov 2014
STATE OF UTAH

EarthFax EarthFax Engineering Group, LLC

Engineers / Scientists
www.earthfax.com

TABLE OF CONTENTS

Section — Page

1.0 INTRODUCTION 1

2.0 EXISTING CONDITIONS 2

3.0 CHANNEL REPAIR PLAN 3

3.1 Channel Repair 3
3.2 Revegetation 4

LIST OF FIGURES

Figure — Page

1. Channel SD-6 Cross Section 5

LIST OF ATTACHMENTS

Attachment A - Photographs

Attachment B - Runoff Calculations

PLAN FOR REPAIR OF RECLAMATION CHANNEL SD-6 AT THE GORDON CREEK 2, 7, 8 MINE, CARBON COUNTY, UTAH

1.0 INTRODUCTION

In late September 2014, a high-intensity thunderstorm generated significant runoff from Bryner Canyon in Carbon County, Utah. This runoff caused substantial erosion of channel SD-6 that is part of the reclaimed Gordon Creek 2, 7, 8 Mine. Phase II bond release for the Gordon Creek 2, 7, 8 Mine was granted on March 7, 2007. Hence, the precipitation event that caused the above-noted erosion occurred following Phase II bond release.

Regulations promulgated by the Utah Division of Oil, Gas and Mining in R645-301-357.340 state that, "Where necessitated by a natural disaster, excluding climatic variation, . . . not caused by any lack of planning, design, or implementation of the mining and reclamation plan on the part of the Permittee, the seeding and planting of the entire area which is significantly affected by the disaster . . . will be allowed as an accepted husbandry practice and thus will not restart the extended responsibility period." These rules specifically exclude events that are the result of "climatic variation," which is not defined in the regulations. The World Meteorological Organization defines climate variability as "Variations in the mean state and other statistics (such as standard deviations, the occurrence of extremes, etc.) of the climate on all temporal and spatial scales beyond that of individual weather events."[1] Thus, climate variation is defined by changes across larger scales of time and space than an individual event like the extreme rainfall of late September 2014 at the Gordon Creek 2, 7, 8 Mine site. As a result, it is anticipated that the work proposed herein will not affect the extended responsibility period or the schedule for Phase III bond release.

The purpose of this document is to present a plan for repair of the damaged sections of reclamation channel SD-6. Bowie Resource Partners ("Bowie") requests that the Utah Division of Oil, Gas and Mining review this plan in an expeditious manner to allow these repairs to be made before soil in the area freezes.

[1] http://www.wmo.int/pages/prog/wcp/ccl/faqs.html

2.0 EXISTING CONDITIONS

Photographs of the eroded channel, taken on October 2, 2014, are provided in Attachment A. On that same day, Richard White of EarthFax Engineering Group measured the cross section encompassed by the high water mark at the upstream end of channel SD-6. Based on field observations, it was estimated that Manning's roughness coefficient for the eroded channel is 0.050. With a channel slope of 0.083 ft/ft and a wetted area of 21.0 ft^2 at the cross section, the discharge rate of the erosional event was calculated to be 137 cfs (see Attachment B). This flow is substantially greater than the design discharge (7.08 cfs, based on the peak flow resulting from the 100-year, 6-hour precipitation event - see Appendix 7-1 of the Mining and Reclamation Plan).

3.0 CHANNEL REPAIR PLAN

The erosion of channel SD-6 was the result of runoff exceeding the design flow due to the extreme nature of the precipitation event in the area. Nevertheless, rather than repairing the channel to a larger cross section to safely convey such events in the future, the channel will be repaired to its original design cross section to avoid what might be considered "new" mining operations. This decision is further justified by the fact that the original channel design was based on extreme conditions (the 100-year, 6-hour precipitation event) that are considered sufficiently protective from an engineering perspective.

To minimize the potential for damage to previously reclaimed areas, access to the eroded channel will be via the former (now reclaimed) mine access road. Thus, equipment will track across areas that were not affected by the storm. Therefore, all areas affected by this project that are not part of the eroded channel will be restored to their approximate pre-project condition before the project is completed.

3.1 Channel Repair

SD-6 was designed as a trapezoidal channel with a finished bottom width of 5 feet, 2:1 side slopes, and a minimum depth of 1.5 feet. The channel was lined with riprap having a median diameter of 9 inches and underlain by a 9-inch thick filter layer of sandy gravel having a median diameter of 0.25 inch to protect against soil piping beneath the riprap. This same approach will be taken during the channel repair.

All of channel SD-6 will require repair. In accordance with the original design, the channel will be replaced as indicated on Figure 1. The basic plan for repair of the channel is as follows:

- Mobilize equipment and materials to the site and install sediment controls as necessary.
- Regrade all areas of the damaged channel, as necessary, to fill eroded sections and achieve the required grades.
- Install the filter bedding to a depth of 9 inches.
- Install D_{50} = 9 inch riprap to a depth of 18 inches.
- Revegetate all areas disturbed by this project.

Riprap used in the channel repair will be durable, angular, hard, and free from seams and cracks. The riprap and filter materials will meet the following gradation requirements:

D_{50} = 9 inches (Riprap)

	PERCENT PASSING	
SIZE	TARGET	PERMISSIBLE RANGE
18"	100%	85-100%
15"	85%	70-100%
9"	50%	35-65%
4"	15%	0-30%
1.8"	0%	0-10%

D_{50} = 0.25 inch (Filter Material)

	PERCENT PASSING	
SIZE	TARGET	PERMISSIBLE RANGE
4.2"	100%	85-100%
1.5"	85%	70-90%
0.25"	50%	35-60%
0.1"	15%	5-25%

The channel will be graded as necessary to form a base for the repairs, with an allowance made for the placement of riprap and filter bedding. Filter bedding will be installed at a nominal thickness of 9 inches beneath the riprap prior to placement of the riprap. The riprap will then be placed in the channel.

3.2 Revegetation

Areas that were affected by the erosion and equipment access will be gouged as necessary as the equipment departs from the site. This will loosen the topsoil and minimize the long-term potential for erosion of these areas. The affected areas will then be revegetated using the seed mix provided in Table 3-3 of the Mining and Reclamation Plan. Certification will be obtained from the seed supplier to ensure that the seed mix does not contain weed seed in excess of 0.5% of the aggregate weight of pure live seed.

Seeding will be accomplished via hydroseeding or broadcast seeding. If hydroseeding is used, the seed will be mixed with a small amount of wood fiber mulch, used as tracer, and water to form a slurry. If broadcast seeding is used, the seed will be broadcast by mechanical means, or by hand, such that the seed is uniformly distributed. Mulch will be applied as indicated in Section 3.5.5.3 of the Mining and Reclamation Plan. Bowie's goal is to complete all seeding this year prior to the onset of significant snowfall.

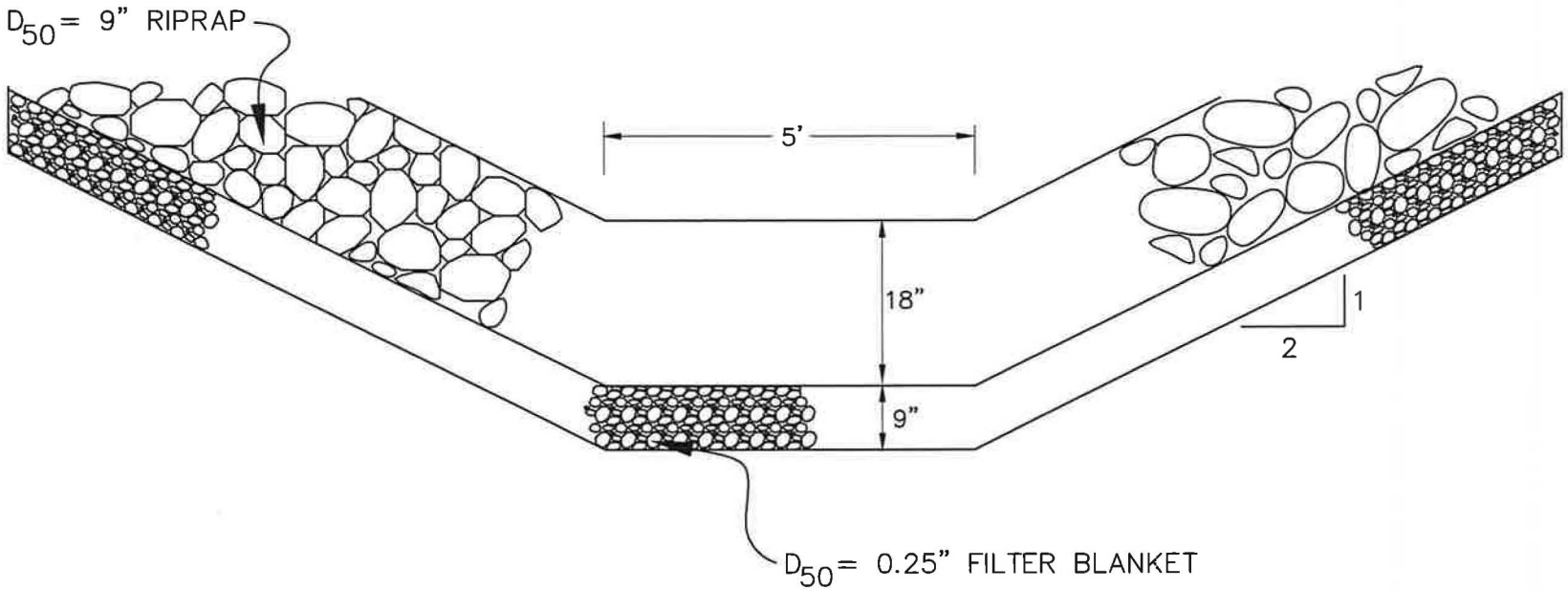

FIGURE 1. CHANNEL SD-6 CROSS SECTION

EarthFax

G:\JC1489\02 - Channel SD-6 repair\Figure 1 Channel SD-6 Cross Section BP.dwg, 11/3/2014 3:01:58 PM

ATTACHMENT A

Photographs

View of area immediately upstream from SD-6

Beginning of eroded section (downstream view)

Middle of eroded section (downstream view)

Eroded section at break in slope (upstream view)

Downstream end of SD-6 (upstream view)

View of Bryner Canyon, upstream from confluence with SD-6

Location of cross section used for discharge estimate (upstream view)

Location of cross section used for discharge estimate (downstream view)

ATTACHMENT B

Runoff Calculations

Estimated Flow in Channel SD-6
Worksheet for Irregular Channel

Project Description	
Worksheet	Estimated Historic Flow
Flow Element	Irregular Channel
Method	Manning's Formula
Solve For	Discharge

Input Data		
Slope	083000	ft/ft
Water Surface Elev	10.00	ft

Options	
Current Roughness Methc	ved Lotter's Method
Open Channel Weighting	ved Lotter's Method
Closed Channel Weightin	Horton's Method

Results		
Mannings Coeffic	0.050	
Elevation Range	58 to 10.00	
Discharge	137.15	cfs
Flow Area	21.0	ft²
Wetted Perimeter	31.65	ft
Top Width	30.00	ft
Actual Depth	2.42	ft
Critical Elevation	10.16	ft
Critical Slope	0.041622	ft/ft
Velocity	6.52	ft/s
Velocity Head	0.66	ft
Specific Energy	10.66	ft
Froude Number	1.37	
Flow Type	Supercritical	

Roughness Segments

Start Station	End Station	Mannings Coefficient
0+00	0+30	0.050

Natural Channel Points

Station (ft)	Elevation (ft)
0+00	10.00
0+05	9.42
0+10	9.25
0+15	9.08
0+16	9.00
0+17	7.58
0+18	7.75
0+19	9.00
0+30	10.00

ADDENDUM TO APPENDIX 7-1

REVISED PLAN FOR REPAIR OF RECLAMATION CHANNEL SD-6 AT THE GORDON CREEK 2, 7, 8 MINES, CARBON COUNTY, UTAH

Revised Plan for Repair of Reclamation Channel SD-6 at the Gordon Creek 2, 7, 8 Mine, Carbon County, Utah

Bowie Resource Partners, LLC
Grand Junction, Colorado

October 2015

REGISTERED PROFESSIONAL ENGINEER
No. 168246
RICHARD B. WHITE
8 Oct 2015
STATE OF UTAH

EarthFax EarthFax Engineering Group, LLC

Engineers / Scientists
www.earthfax.com

TABLE OF CONTENTS

Section — Page

1.0 BACKGROUND 1

2.0 RESIGN RE-EVALUATION 1

3.0 REPAIR PLAN 3

4.0 REFERENCES 3

LIST OF FIGURES

Figure — Page

1. Repaired Reclamation Channel SD-6 Cross Section 5

LIST OF ATTACHMENTS

Attachment A - Photographs

Attachment B - Design Calculations

REVISED PLAN FOR REPAIR OF RECLAMATION CHANNEL SD-6 AT THE GORDON CREEK 2,7,8 MINE, CARBON COUNTY, UTAH

1.0 BACKGROUND

Reclamation channel SD-6 was designed to convey a peak flow of 7.08 cfs resulting from a 100-year, 6-hour precipitation event. The cross section of the trapezoidal channel (with a 5-foot bottom width, 2H:1V side slopes, and a depth of 1.5 feet) was based on the minimum design channel slope of 7.5%, while riprap sizing was determined based on a maximum design slope of 40%. Riprap sizing was calculated using the permissible velocity approach presented in the 1967 edition of Hydraulic Engineering Circular No. 11 (Searcy, 1967).

A high-intensity precipitation event in September 2014 caused substantial erosion of channel SD-6 and other reclamation channels at the Gordon Creek 2,7,8 Mine in Carbon County, Utah. As a result, these channels were reconstructed to their original design. Another high-intensity event in the summer of 2015 resulted in erosion of the riprap lining in the downstream (steeper) section of channel SD-6. The upper section of channel SD-6, with a milder slope, was not damaged by the recent event. Photographs of the 2015 erosion are provided in Attachment A. As a result of the most recent erosion, the decision was made to re-evaluate the original design approach prior to repairing the channel.

2.0 DESIGN RE-EVALUATION

The design of channel SD-6 riprap armoring was re-evaluated using the tractive-force approach recommended in the updated Hydraulic Engineering Circular No. 11 (Brown and Clyde, 1989). According to this method, the median diameter of riprap required to be stable in a channel is calculated using the following equation:

$$D_{50} = 0.001 \frac{V_a^3}{d_{avg}^{0.5}\, K_1^{1.5}}$$

where

D_{50} = median riprap particle size (ft)
V_a = average flow velocity (ft/s)
d_{avg} = average flow depth (ft)
K_1 is defined as:

$$K_1 = [1 - (sin^2\theta / sin^2\emptyset)]^{0.5}$$

where

θ = bank angle with the horizontal
ϕ = riprap material angle of repose

The average flow velocity and depth of flow were determined using FlowMaster, based on a design flow of 7.08 cfs and an as-built maximum slope of 44%. A Manning's roughness coefficient of 0.042 was assumed for these calculations based on an assumed median diameter of 18 inches and the following equation developed by Anderson et al. (1970):

$$n = 0.0395\, D_{50}^{1/6}$$

where

n = Manning's roughness coefficient
D_{50} = median riprap diameter (ft)

These results of these calculations are presented in Attachment B. As indicated, the average velocity in the lower section of reclamation channel SD-6 was calculated to be 7.18 ft/s, with an average flow depth of 0.18 ft. The median riprap diameter was calculated to be 17.7 inches. This was rounded up to a median diameter of 18 inches for construction purposes. This agrees with the diameter initially assumed for calculating Manning's roughness coefficient, thus verifying the appropriateness of that assumed value.

Riprap gradation and the need for filter layers were determined based on the recommendations of Brown and Clyde (1989). The filter material used previously consisted of sandy gravel with a median particle diameter of 0.25 inch. Site observations indicate that a sufficient quantity of this material remains on site for use as a filter layer.

The calculations presented in Attachment B indicate that two filter layers will be required between the riprap layer and the underlying soil. The uppermost filter layer will consist of coarse gravel with a median particle diameter of 1.5 inches. The lower filter layer will consist of the previous filter material with a median particle diameter of 0.25 inch. Based on the recommendations of Brown and Clyde, the armoring materials will have the following approximate gradations:

Percent Passing	Ideal Size (in)			Desirable Size Range (in)		
	Riprap	Upper Filter	Lower Filter	Riprap	Upper Filter	Lower Filter
100	29	2.4	0.40	27-31	2.2-2.4	0.38-0.43
85	23	2.0	0.32	22-25	1.8-2.1	0.30-0.35
50	18	1.5	0.25	18-21	1.5-1.7	0.25-0.29
15	9	0.8	0.12	7-11	0.6-0.9	0.10-0.15

Consistent with the recommendations of Brown and Clyde (1989), each filter layer will be placed to a thickness of 4 to 8 inches. The resulting cross section of the lower portion of reclamation channel SD-6 is shown in Figure 1.

3.0 REPAIR PLAN

Only the lower of channel SD-6 will require repair. In accordance with the above calculations, the channel will be replaced as indicated on Figure 1. The basic plan for repair of the channel is as follows:

- Mobilize equipment and materials to the site and install sediment controls as necessary.
- Recover riprap and filter material that has accumulated at the downstream end of the channel for re-use as appropriate.
- Regrade the lower section of the damaged channel, as necessary, to fill eroded sections and achieve the required grades.
- Install the lower filter bedding (D_{50}=0.25 inch) to a depth of 4 to 8 inches.
- Install the lower filter bedding (D_{50}=1.5 inches) to a depth of 4 to 8 inches.
- Install D_{50} = 18 inch riprap to a depth of 30 inches.
- Revegetate all areas disturbed by this project.

Riprap used in the channel repair will be durable, angular, hard, and free from seams and cracks. The riprap and filter materials will meet the gradations indicated in Section 2.0 of this plan.

Areas that are affected by equipment access will be gouged as necessary as the equipment departs from the site. This will loosen the topsoil and minimize the long-term potential for erosion of these areas. The affected areas will then be revegetated using the seed mix provided in Table 3-3 of the Mining and Reclamation Plan. Certification will be obtained from the seed supplier to ensure that the seed mix does not contain weed seed in excess of 0.5% of the aggregate weight of pure live seed.

Seeding will be accomplished via hydroseeding or broadcast seeding. If hydroseeding is used, the seed will be mixed with a small amount of wood fiber mulch, used as tracer, and water to form a slurry. If broadcast seeding is used, the seed will be broadcast by mechanical means, or by hand, such that the seed is uniformly distributed. Mulch will be applied as indicated in Section 3.5.5.3 of the Mining and Reclamation Plan. Bowie's goal is to complete all seeding this year prior to the onset of significant snowfall.

4.0 REFERENCES

Anderson, A.G., A.S. Paintal, and J.T. Davenport. 1970. Tentative Design Procedure for Riprap-Lined Channels. National Cooperative Highway Research Program Report 108. Highway Research Board, Division of Engineering, National Academy of Sciences. Washington, D.C.

Brown, S.A. and E.S. Clyde. 1989. Design of Riprap Revetment. Hydraulic Engineering Circular No. 11. Federal Highway Administration, Office of Implementation. McLean, VA.

Searcy, J.K. 1967. Use of Riprap for Bank Protection. Hydraulic Engineering Circular No. 11. Federal Highway Administration, Hydraulics Branch, Bridge Division, Office of Engineering and Traffic Operations. Washington, D.C.

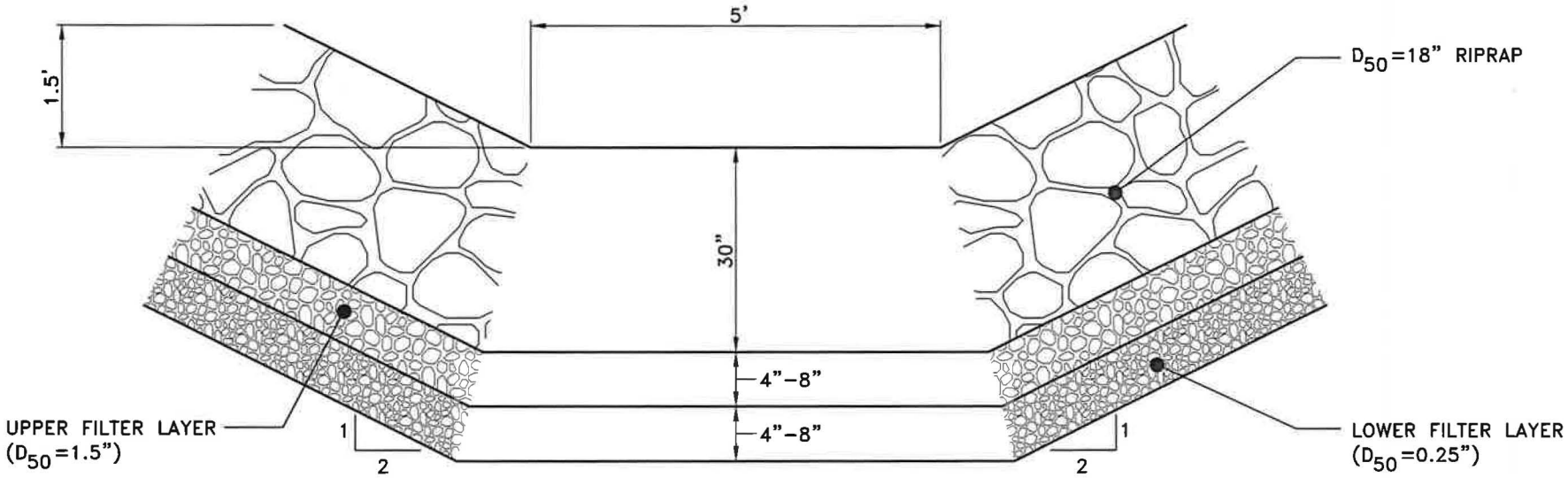

FIGURE 1. REPAIRED RECLAMATION CHANNEL SD-6 CROSS SECTION

EarthFax

G:\UC1489\02 - Channel SD-6 repair\Figure 1.Channel SD-6 Cross Section RP.dwg, 10/6/2015 11:54:36 AM

ATTACHMENT A

Photographs

Upper (mild slope) section of SD-6. Note lack of erosion.

Downstream view of eroded (steep slope) section of SD-6

Upstream view of eroded (steep slope) section of SD-6

Eroded material collected at the bottom of SD-6

Rock adjacent to downstream end of SD-6, potentially available for use as riprap

Rock and fine filter material at site entrance, potentially available for use in channel repair

ATTACHMENT B

Design Calculations

Rredesign of SD-6 Lower Section
Worksheet for Trapezoidal Channel

Project Description	
Worksheet	SD-6 Lower Sec
Flow Element	Trapezoidal Cha
Method	Manning's Formı
Solve For	Channel Depth

Input Data		
Mannings Coeffic	0.042	
Slope	440000	ft/ft
Left Side Slope	0.50	V : H
Right Side Slope	0.50	V : H
Bottom Width	5.00	ft
Discharge	7.08	cfs

Results		
Depth	0.18	ft
Flow Area	1.0	ft²
Wetted Perim	5.82	ft
Top Width	5.73	ft
Critical Depth	0.38	ft
Critical Slope	0.038453	ft/ft
Velocity	7.18	ft/s
Velocity Head	0.80	ft
Specific Energ	0.99	ft
Froude Numb	3.05	
Flow Type	Supercritical	

EARTHFAX ENGINEERING GROUP, LLC
RIPRAP SIZING BASED ON HEC-11

Project #: UC-1489-02
Site: Reclamation channel SD-6, lower section, Gordon Creek 2,7,8 Mine
Engineer: RB White

Bank angle = 2 :1 = 26.57 degrees = 0.464 radians
Rpirap material angle of repose = 39 degrees = 0.681 radians

K1 = 0.704

Channel	Design Velocity (ft/s)	Flow Depth (ft)	Median Riprap Diameter		
			Calculated (ft)	Calculated (in)	Planned (in)
SD-6	7.18	0.18	1.478	17.7	18

Reference:

Brown, S.A. and E,S, Clyde. 1989. Design of Riprap Revetment. Hydraulic Engineering Circular No. 11. U.S. Departmnt of Transportation, Federal Highway Administration. McLean, Virginia.

EARTHFAX ENGINEERING GROUP, LLC
RIPRAP FILTER CALCULATION

Project #: UC-1489-02
Site: Reclamation channel SD-6, lower sction, Gordon Creek 2,7,8 Mine
Engineer: RB White

Assumed median diameters (inches):

Riprap: 18
Upper Fltr: 1.5
Lower Fltr: 0.25 (i.e., old filter material)

Ideal calculated or measured gradations (inches):

Size Class	Riprap	Upper Filter	Lower Filter
D_{100}	28.8	2.4	0.4
D_{85}	23.4	1.95	0.325
D_{50}	18	1.5	0.25
D_{15}	9	0.75	0.125

Calculated gradations based on:

D_{100} = 1.5 D_{50} to 1.7 D_{50}
D_{85} = 1.2 D_{50} to 1.4 D_{50}
D_{50} = 1.0 D_{50} to 1.1 D_{50}
D_{15} = 0.4 D_{50} to 0.6 D_{50}

Filter gradation criteria:

D_{15}(coarser layer)/D_{85}(finer layer) < 5

5 < D_{15}(coarser layer)/D_{15}(finer layer) < 40

Filter gradation check:

Layers Compared	D_{15}(coarse)/D_{85}(fine)	D_{15}(coarse)/D_{15}(fine)	OK?
Riprap vs. Upper	4.6	12.0	Yes
Upper vs. Lower	2.3	6.0	Yes
Criterion	< 5	5 - 40	

Reference:

Brown, S.A. and E.S. Clyde. 1989. Design of Riprap Revetment. Hydraulic Enigneering Circular No. 11. Federal Highway Administration. McLean, VA.

ADDENDUM TO APPENDIX 7-1

AS-BUILT REPORT FOR THE

LOWER SECTION OF RECLAMATION CHANNEL SD-6

(To be placed at the back of the addendum)

EarthFax Engineering Group, LLC
7324 South Union Park Avenue, Suite 100, Midvale, Utah 84047 • 801.561.1555 • FAX 801.561.1861

EarthFax

December 21, 2015

Chris Hansen
Bowie Resource Partners, LLC
225 N 5th Street, Suite 900
Grand Junction, CO 81501

Subject: Gordon Creek Channel SD-6 As-Built Information

Dear Chris:

Attached please find the results of our survey of the re-constructed reclamation channel SD-6 at the Gordon Creek 2,7,8 Mine. Survey data were collected using a Pentax AP-124 level, with measuring tapes stretched down the profile and across the sections of the channel. A bench mark was established by driving a nail in the base of an aspens tree on the east side of the channel approximately 150 feet downstream from the head of the channel.

Survey data collected in the field are provided in Attachment A. This attachment also contains printouts of the channel profile and cross sections collected from points 50, 100, and 150 downstream from the head of the channel. The channel was designed with a trapezoidal shape, having a 5-foot bottom width with 2H:1V side slopes and a minimum depth of 1.5 feet. At this design, the channel would have a cross sectional area of 12.0 ft^2. The field survey indicates that the channel has cross sectional areas of 16.1 ft^2 at station 0+50, 32.2 ft^2 at station 1+00, and 45.4 ft^2 at station 1+50 (with station numbering beginning at the head of the reclaimed channel). Surveyed bank slopes range from 1.9H:1V to 7.5H:1V. Thus, the surveyed cross sections generally meet or exceed the design requirements.

The adequacy of the constructed channel to convey the peak flow resulting from the 100-year, 6-hour storm event was evaluated using FlowMaster and the design peak flow of 7.08 cfs. The results of this evaluation are provided in Attachment B and summarized in Table 1. The estimated flow depths and velocities are all within acceptable ranges for the cross sections and riprap used to armor the channel.

Channel SD-6 was originally designed to be armored with riprap having a median diameter of 9 inches. Following erosion of this lining in the steeper portion of the channel during a high-intensity thunderstorm in the summer of 2015, this riprap in the lower section was designed to have a median diameter of 18 inches. My visual observations during the December 2015 survey indicated that the installed riprap adequately meets the design.

I have appreciated the opportunity to be of assistance. Please contact me if you have any questions.

Sincerely,

Richard B. White, P.E.
President

Attachments

REGISTERED PROFESSIONAL ENGINEER
No. 168246
RICHARD B. WHITE
21 Dec 2015
STATE OF UTAH

TABLE 1

Flow Depth and Velocity from the
100-year, 6-hour Precipitation Event[a]

Cross Section Station	Flow Depth (ft)	Velocity (ft/s)
0+50	0.19	4.89
1+00	0.26	5.66
1+50	00.24	5.73

[a]Based on a design flow of 7.07 cfs

ATTACHMENT A

Survey Data

SD-6 as-constructed channel

Survey Date: 3-Dec-15
Project: UC-1489-02

Benchmark elevation (ft): 100
Rod reading at Benchmark (ft): 12.73
New Bmark at Station 170 (ft): 2.22

Channel Profile:

Station (ft)	Channel Bottom (ft)		Channel Slope (ft/ft)
	Rod Reading	Elevation	
0	-0.72	113.45	
10	0.64	112.09	0.136
20	1.12	111.61	0.048
30	1.86	110.87	0.074
40	2.69	110.04	0.083
50	2.94	109.79	0.025
60	3.84	108.89	0.090
70	4.51	108.22	0.067
80	5.87	106.86	0.136
90	6.91	105.82	0.104
100	8.69	104.04	0.178
110	10.10	102.63	0.141
120	11.35	101.38	0.125
130	13.53	99.20	0.218
140	16.15	96.58	0.262
150	19.03	93.70	0.288
160	22.28	90.45	0.325
170	15.68	86.54	0.391
180	19.10	83.12	0.342
190	22.49	79.73	0.339

Channel cross sections
(Station 0+00 at right-hand side, looking upstream)

Station 0+50:

Distance (ft)	Channel Bottom (ft)		Bank Slope (H:V)
	Rod Reading	Elevation	
0	1.93	110.80	
6.5	2.80	109.93	7.47
14.7	2.91	109.82	
19.7	2.60	110.13	
27.5	1.49	111.24	7.03

Station 1+00:

Distance (ft)	Channel Bottom (ft)		Bank Slope (H:V)
	Rod Reading	Elevation	
0	5.27	107.46	
8	7.83	104.90	3.13
12	8.47	104.26	
15.5	8.58	104.15	
19.8	8.26	104.47	
24.3	7.12	105.61	
28.4	6.46	106.27	6.21

Station 1+50:

Distance (ft)	Channel Bottom (ft)		Bank Slope (H:V)
	Rod Reading	Elevation	
0	14.65	98.08	
5.1	16.99	95.74	2.18
10	19.08	93.65	
16.3	19.71	93.02	
21	19.62	93.11	
26.5	16.71	96.02	1.89

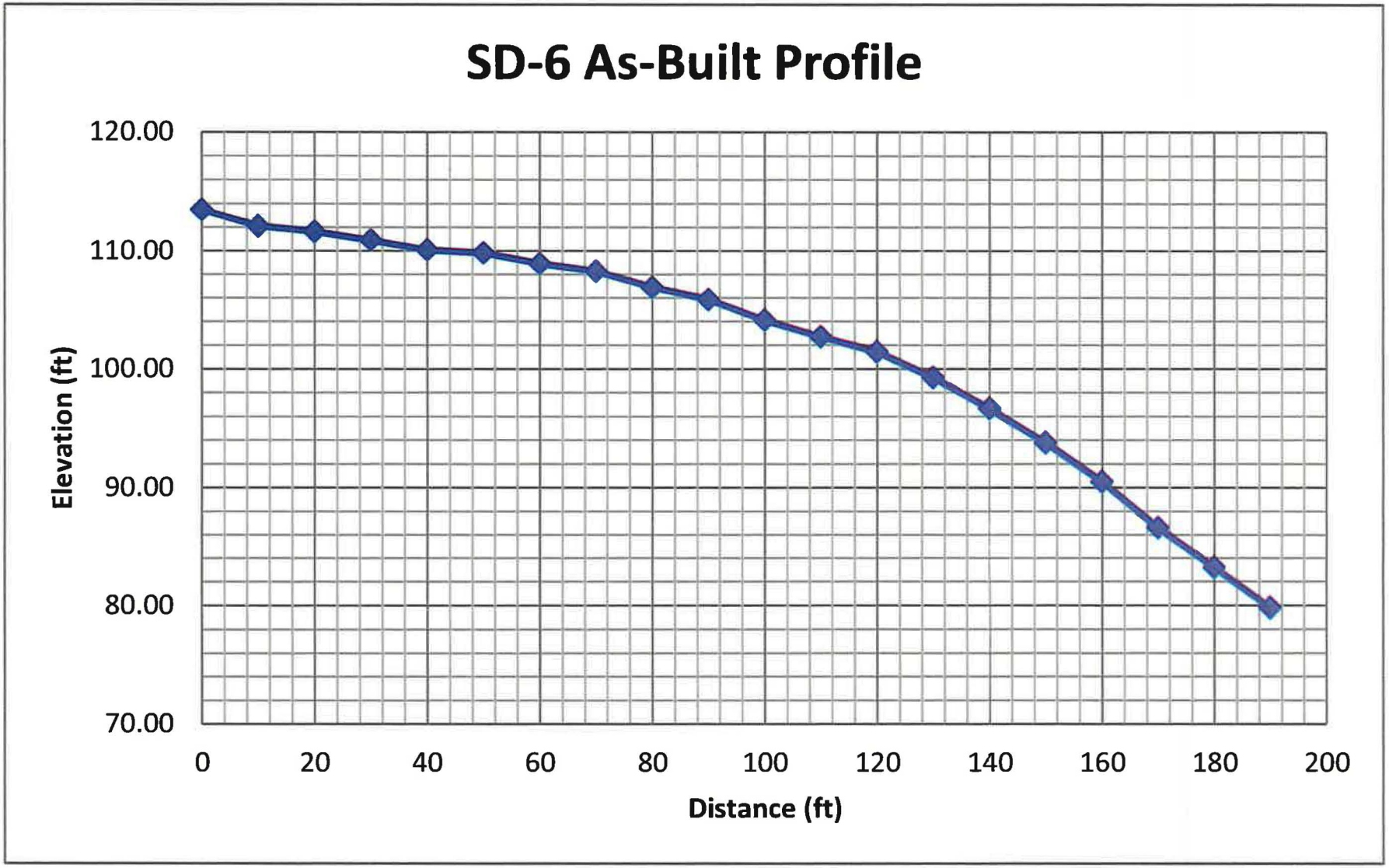
SD-6 As-Built Profile
120.00
110.00
100.00
90.00
80.00
70.00
Elevation (ft)
0
20
40
60
80
100
120
140
160
180
200
Distance (ft)

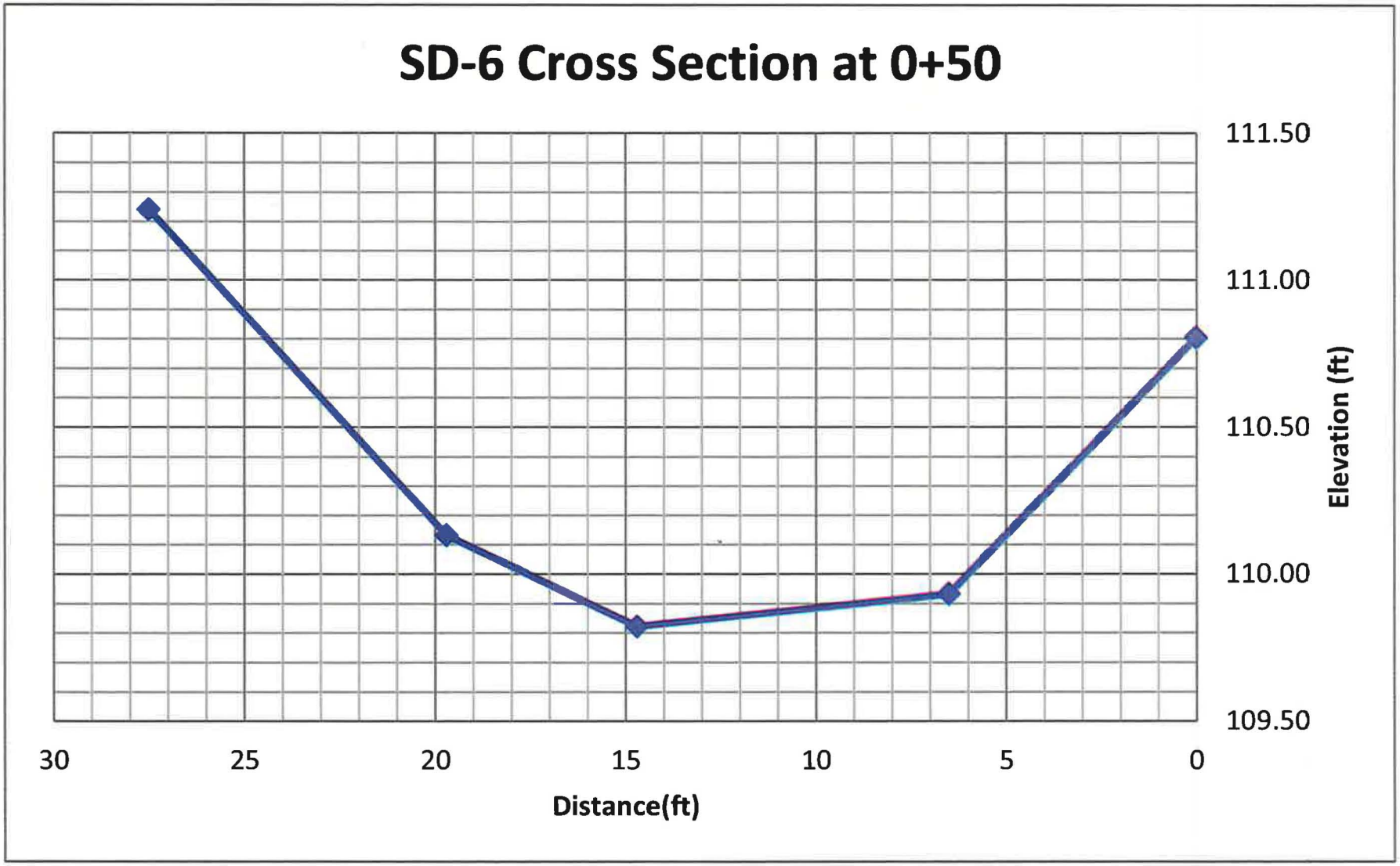
SD-6 Cross Section at 0+50
111.50
111.00
110.50
110.00
109.50
Elevation (ft)
30
25
20
15
10
5
0
Distance(ft)

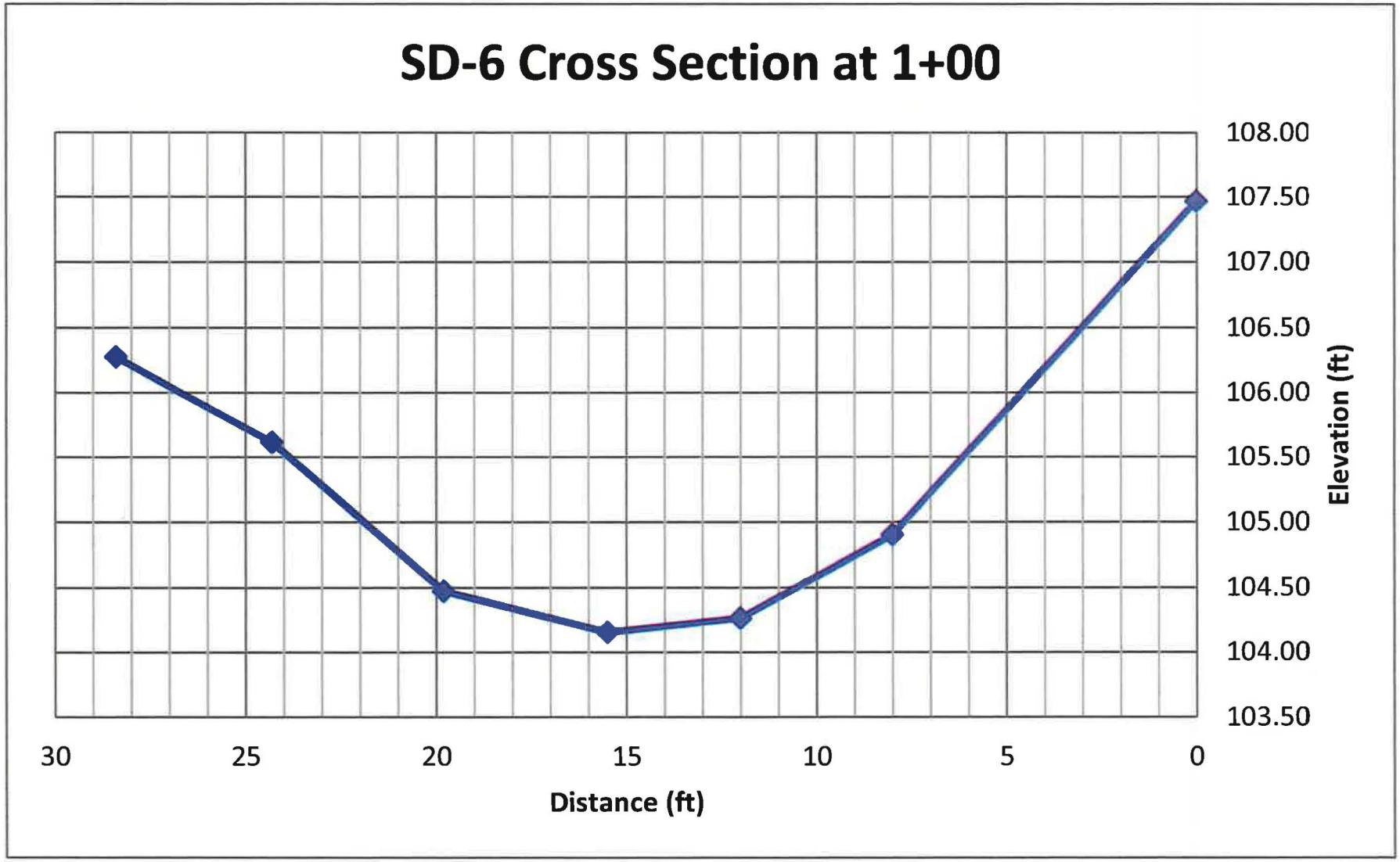
SD-6 Cross Section at 1+00
108.00
107.50
107.00
106.50
106.00
105.50
105.00
104.50
104.00
103.50
Elevation (ft)
30
25
20
15
10
5
0
Distance (ft)

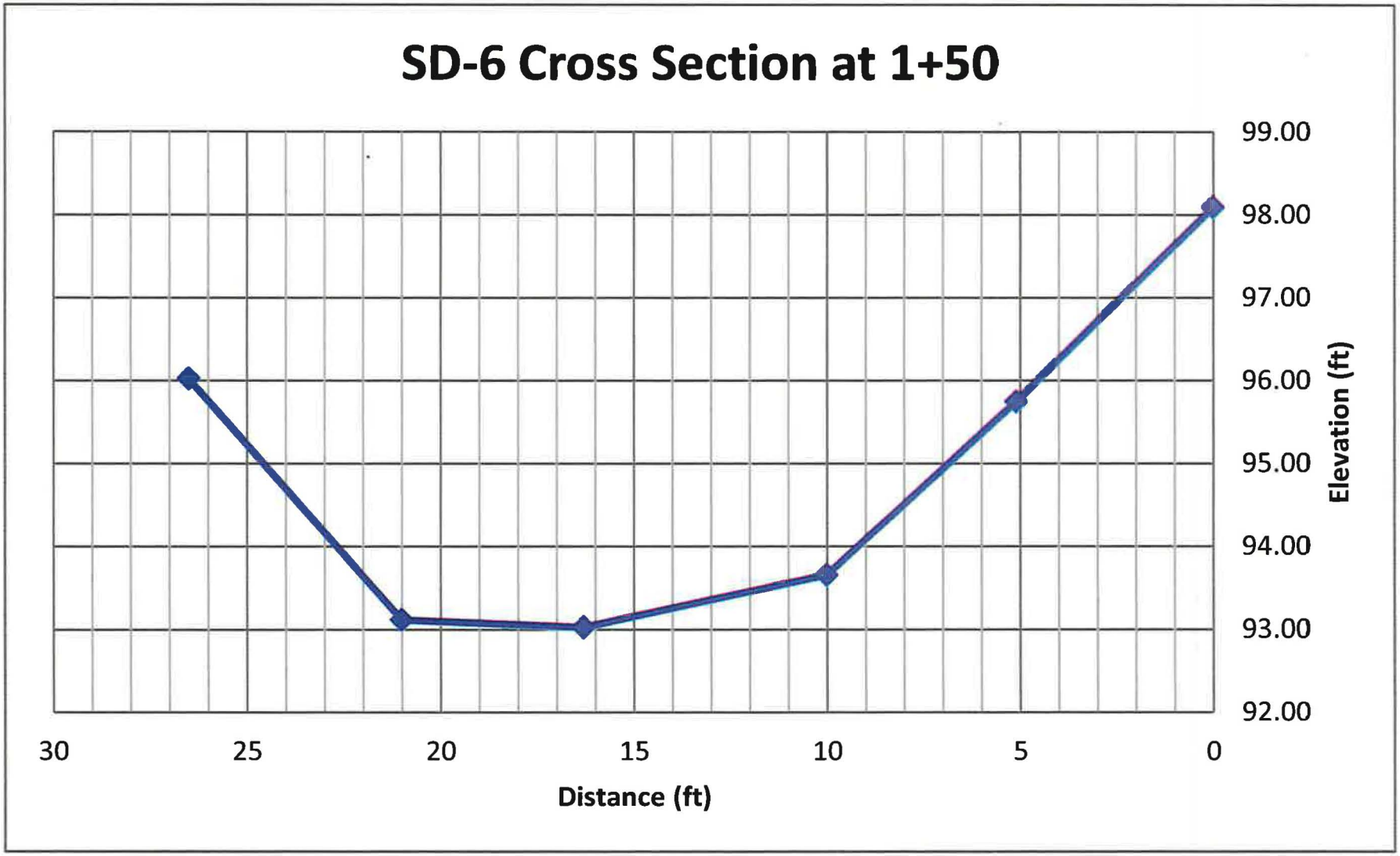
SD-6 Cross Section at 1+50
99.00
98.00
97.00
96.00
95.00
94.00
93.00
92.00
Elevation (ft)
30
25
20
15
10
5
0
Distance (ft)

ATTACHMENT B

Channel Adequacy Evaluation

SD-6 Cross Secton at Station 0+50
Worksheet for Irregular Channel

Project Description	
Worksheet	SD-6 Cross Sec
Flow Element	Irregular Chann
Method	Manning's Form
Solve For	Channel Depth

Input Data		
Slope	288000	ft/ft
Discharge	7.08	cfs

Options	
Current Roughness Method	ved Lotter's Method
Open Channel Weighting	ved Lotter's Method
Closed Channel Weighting	Horton's Method

Results		
Mannings Coefficient	0.040	
Water Surface Elev	110.01	ft
Elevation Range	9.82 to 111.24	
Flow Area	1.4	ft²
Wetted Perimeter	11.93	ft
Top Width	11.91	ft
Actual Depth	0.19	ft
Critical Elevation	110.12	ft
Critical Slope	0.040214	ft/ft
Velocity	4.89	ft/s
Velocity Head	0.37	ft
Specific Energy	110.38	ft
Froude Number	2.47	
Flow Type	Supercritical	

Roughness Segments

Start Station	End Station	Mannings Coefficient
0+00	0+28	0.040

Natural Channel Points

Station (ft)	Elevation (ft)
0+00	110.80
0+07	109.93
0+15	109.82
0+20	110.13
0+28	111.24

SD-6 Cross Section at Station 0+50
Cross Section for Irregular Channel

Project Description	
Worksheet	SD-6 Cross Se
Flow Element	Irregular Chann
Method	Manning's Form
Solve For	Channel Depth

Section Data		
Mannings Coefficie	0.040	
Slope	0.288000	ft/ft
Water Surface Elev	110.01	ft
Elevation Range	9.82 to 111.24	
Discharge	7.08	cfs

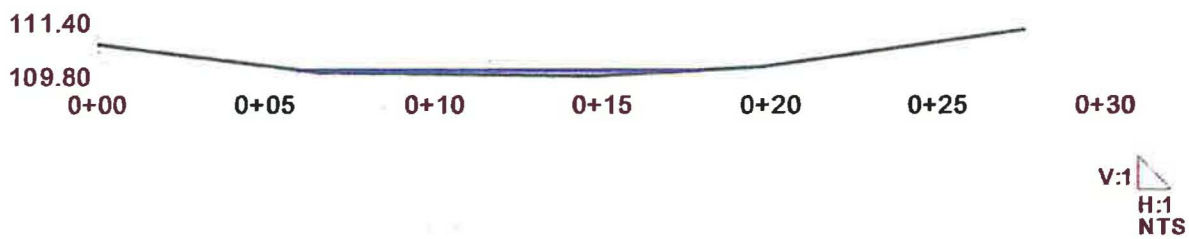

SD-6 Cross Secton at Station 1+00
Worksheet for Irregular Channel

Project Description	
Worksheet	SD-6 Cross Soc
Flow Element	Irregular Chann
Method	Manning's Form
Solve For	Channel Depth

Input Data		
Slope	288000	ft/ft
Discharg	7.08	cfs

Options	
Current Roughness Metho	ved Lotter's Method
Open Channel Weighting	ved Lotter's Method
Closed Channel Weightin	Horton's Method

Results		
Mannings Coefficie	0.041	
Water Surface Elev	104.41	ft
Elevation Range	4.15 to 107.46	
Flow Area	1.3	ft²
Wetted Perimeter	7.98	ft
Top Width	7.95	ft
Actual Depth	0.26	ft
Critical Elevation	104.55	ft
Critical Slope	0.039053	ft/ft
Velocity	5.66	ft/s
Velocity Head	0.50	ft
Specific Energy	104.91	ft
Froude Number	2.51	
Flow Type	Supercritical	

Roughness Segments

Start Station	End Station	Mannings Coefficient
0+00	0+28	0.041

Natural Channel Points

Station (ft)	Elevation (ft)
0+00	107.46
0+08	104.90
0+12	104.26
0+16	104.15
0+20	104.47
0+24	105.61
0+28	106.27

SD-6 Cross Section at Station 1+00
Cross Section for Irregular Channel

Project Description	
Worksheet	SD-6 Cross Sec
Flow Element	Irregular Chann
Method	Manning's Form
Solve For	Channel Depth

Section Data		
Mannings Coefficie	0.041	
Slope	0.288000	ft/ft
Water Surface Elev	104.41	ft
Elevation Range	1.15 to 107.46	
Discharge	7.08	cfs

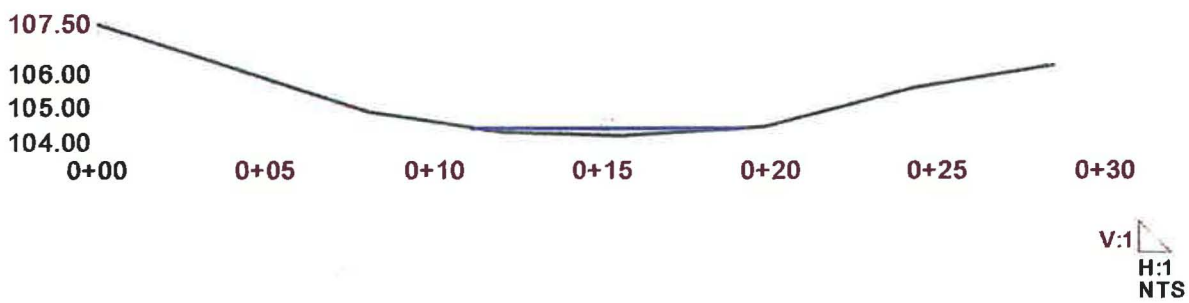

SD-6 Cross Secton at Station 1+50
Worksheet for Irregular Channel

Project Description	
Worksheet	SD-6 Cross Sec
Flow Element	Irregular Chann
Method	Manning's Form
Solve For	Channel Depth

Input Data		
Slope	288000	ft/ft
Discharg	7.08	cfs

Options	
Current Roughness Meth	ved Lotter's Method
Open Channel Weighting	ved Lotter's Method
Closed Channel Weightin	Horton's Method

Results		
Mannings Coefficie	0.042	
Water Surface Elev	93.26	ft
Elevation Range	.02 to 98.08	
Flow Area	1.2	ft²
Wetted Perimeter	7.45	ft
Top Width	7.40	ft
Actual Depth	0.24	ft
Critical Elevation	93.40	ft
Critical Slope	0.040524	ft/ft
Velocity	5.73	ft/s
Velocity Head	0.51	ft
Specific Energy	93.77	ft
Froude Number	2.47	
Flow Type	Supercritical	

Roughness Segments

Start Station	End Station	Mannings Coefficient
0+00	0+27	0.042

Natural Channel Points

Station (ft)	Elevation (ft)
0+00	98.08
0+05	95.74
0+10	93.65
0+16	93.02
0+21	93.11
0+27	96.02

SD-6 Cross Section at Station 1+50
Cross Section for Irregular Channel

Project Description	
Worksheet	SD-6 Cross Sec
Flow Element	Irregular Chann
Method	Manning's Form
Solve For	Channel Depth

Section Data		
Mannings Coefficie	0.042	
Slope	0.288000	ft/ft
Water Surface Elev	93.26	ft
Elevation Range	.02 to 98.08	
Discharge	7.08	cfs

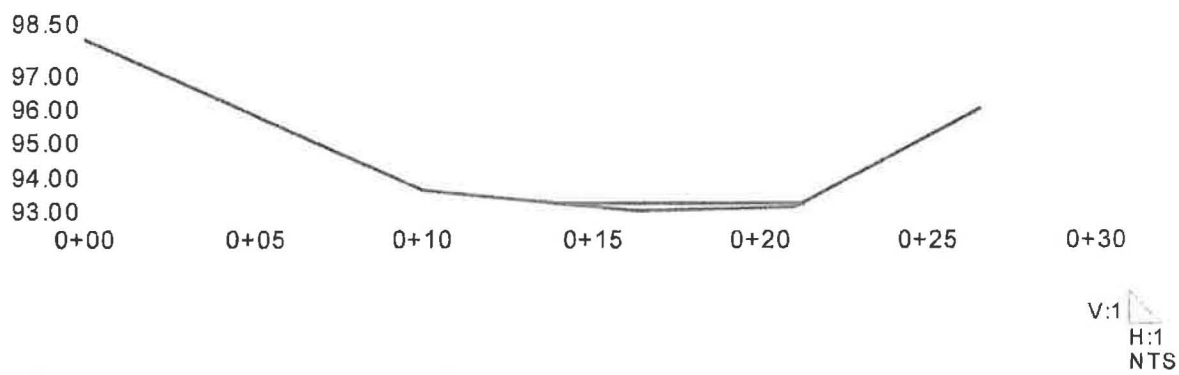

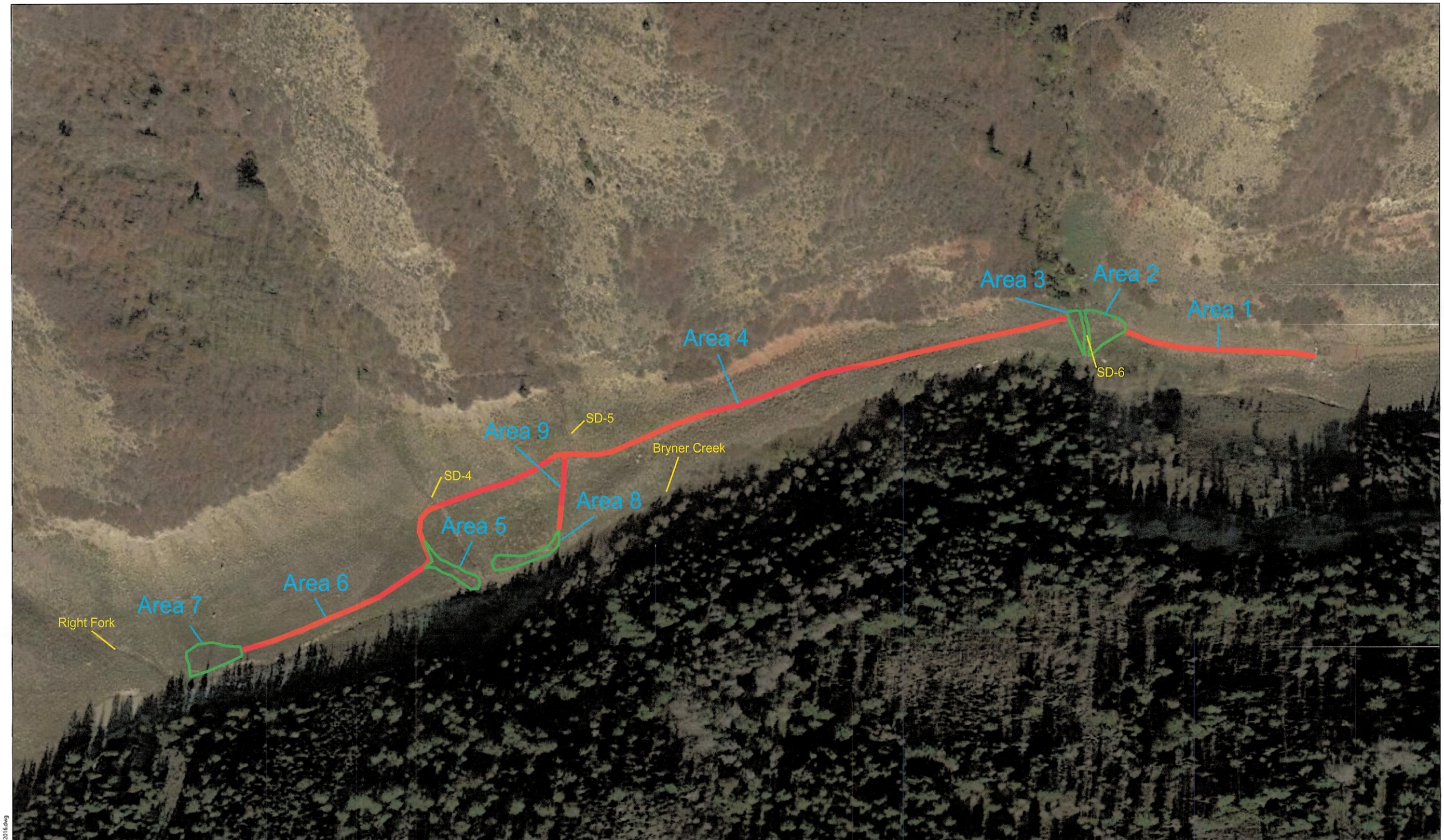

0 100' 200'

REGISTERED PROFESSIONAL ENGINEER
No. 8781250-2202
CRAIG WILLIAM BROWN
STATE OF UTAH

Plate 3-13
2015 Channel Repair Disturbance Areas
Gordon Creek 2/7/8 Mines

RECEIVED
SEP 07 2016
DIV. OF OIL, GAS & MINING

Canyon Fuel Company, LLC

HCR 35 BOX380, HELPER, UT, 84526 435-448-2832	DATE: 05/11/16	CK.BY: CHansen	REVISION: 1
CAD FILE:	SCALE: FULL	DR.BY: BBailey	9/2/2016
DWG. NO.: 000			

P:\Gordon Creek\Gordon Creek Channel Repair 2016.dwg