0007

File ACT/007/018 - 89A
pending

SC3 SOLDIER CREEK COAL CO.

Telephone (801) 637-6360

P.O. Box I
Price, Utah 84501

May 15, 1989

RECEIVED
MAY 17 1989
DIVISION OF
OIL, GAS & MINING

Mr. Lowell Braxton
Division of Oil, Gas & Mining
355 West North Temple
3 Triad Center, Suite 350
Salt Lake City, UT 84180-1203

Re: Incidental Boundary Change

Dear Mr. Braxton:

On April 14, 1989, Soldier Creek Coal Company (SCCC) submitted a request for a 10 acre Incidental Boundary Change (IBC). Following the Division's preliminary review of this submittal, concerns were raised over the proposed mining plans located beneath Soldier Creek, a perennial stream.

SCCC believes that pillars of sufficient size, left in place, shall provide adequate protection to eliminate any adverse effects to Soldier Creek. Therefore, pillar design calculations, as well as a profile of the no secondary mining zone (Figure 2) have been enclosed for your review. Also, SCCC shall commit to a minimum pillar size of 60 ft. x 60 ft. with mining operations confined to the Rock Canyon Seam only.

The proposed 10 acre IBC is shown on Figure 1. Please note that the IBC has been modified slightly from the April 14 submittal. This modification was necessary to allow for the development of a mine water sump.

Your prompt approval of our requested IBC would be appreciated. Should you have any questions or require additional information, please contact me as soon as possible.

Sincerely,

SOLDIER CREEK COAL COMPANY

Dave Spillman

D. G. Spillman
Mine Engineer

Enclosure

DGS/sm

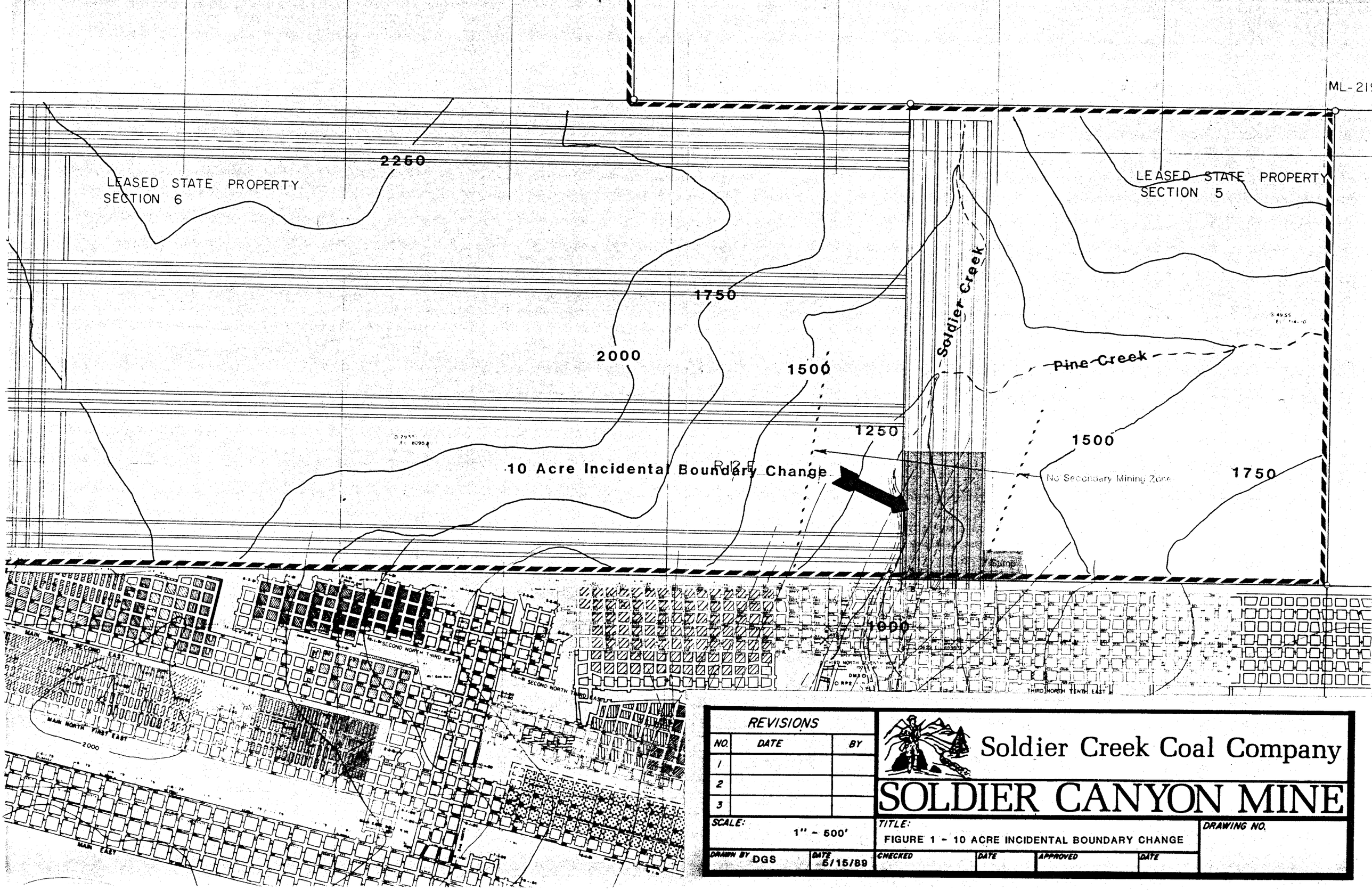

REVISIONS		
NO.	DATE	BY
1		
2		
3		

Soldier Creek Coal Company

SOLDIER CANYON MINE

SCALE: 1" = 500'	TITLE: FIGURE 1 - 10 ACRE INCIDENTAL BOUNDARY CHANGE	DRAWING NO.
DRAWN BY DGS / DATE 5/15/89	CHECKED / DATE / APPROVED / DATE	

METHOD OF PROJECTING A "NO SECONDARY MINING ZONE" FOR SURFACE SUPPORT

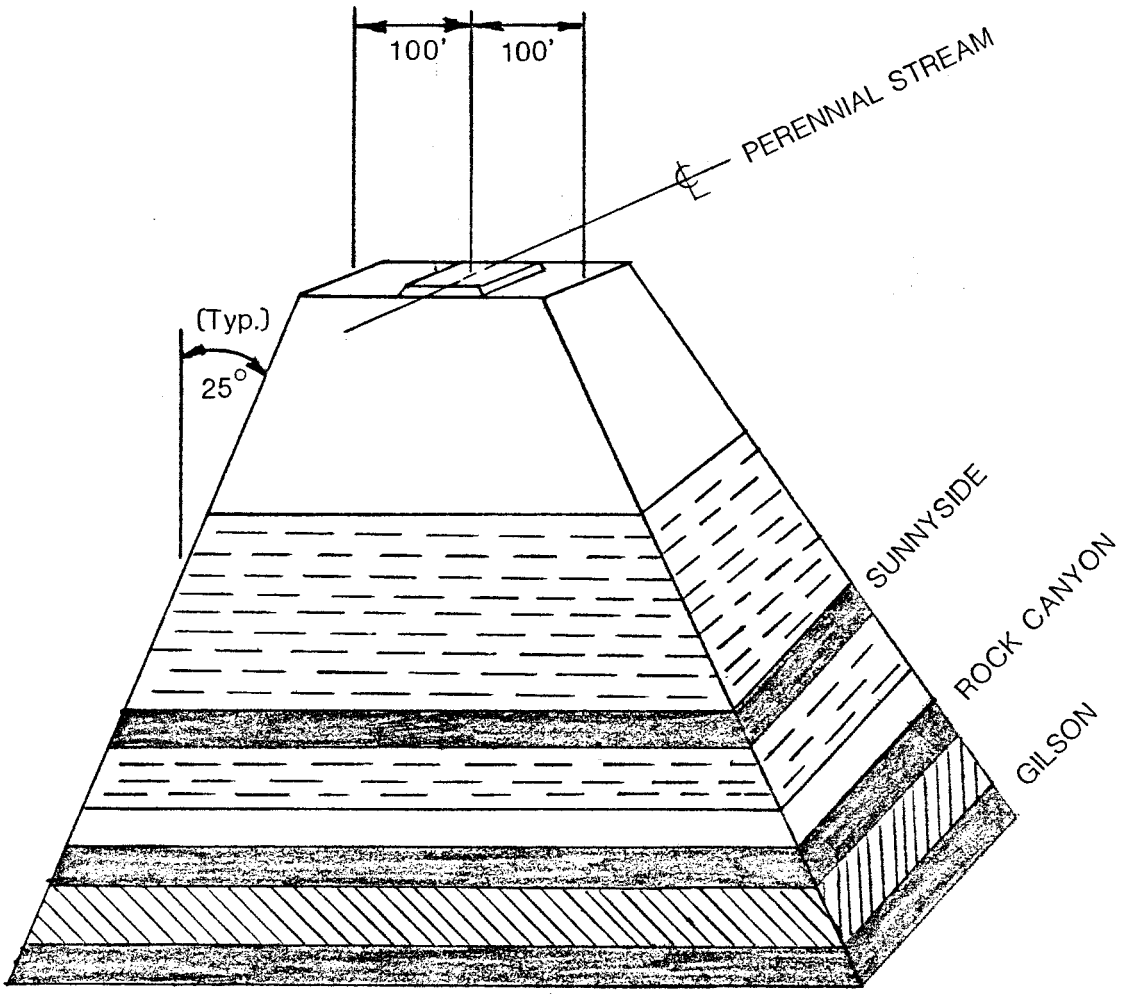

DEVELOPMENT MINING ONLY

REVISIONS		
NO.	DATE	BY
1		
2		
3		

Soldier Creek Coal Company

SOLDIER CANYON MINE

SCALE: NONE	TITLE: Figure 2 - Zone of No Secondary Mining	DRAWING NO.
DRAWN BY DGS / DATE 5/15/89	CHECKED / DATE / APPROVED / DATE	

PILLAR DESIGN

10 Acre Incidental Boundary Change

Soldier Creek Coal Company proposes to extend the existing Third North development into the newly acquired state land coal lease, (Section 5 & 6, T13S, R12E, SLB&M). This proposed development would be located beneath and adjacent to Soldier Creek, a perennial stream. The depth of cover for this area of Soldier Creek ranges from 1,000 feet to approximately 1,250 feet. At this depth of cover, stable pillars shall be left to insure against any adverse surface effects of underground coal mining. The worst case for pillar stability, (pillars 60 ft x 60 ft with 1,250 ft of cover) has been analyzed and found to provide sufficient protection for the stream channel. Specific design details follow in this section.

PILLAR DESIGN

Geotechnical tests and analysis that have been done on rock and coal at the Soldier Canyon Mine have produced the following information:

COAL

Compressive Strength	- 5252 psi
Density	- 81.0 pcf

SANDSTONE

Compressive Strength	- 17,900 psi
Density	- 170.4 pcf

SILTSTONE

Compressive Strength	- 13,880 psi
Density	- 166.0 pcf

PILLAR DESIGN - AREA LOADING

$$Sp = \frac{Sv}{1-R}$$

$$R = 1 - \left[\frac{(Lp)\ (Wp)}{(Lp + Wc)\ (Wp + Wo)}\right]$$

Sp = average pillar stress

Sv = vertical stress

R = extraction ratio

Lp = length of pillar - 60 ft.

Wp = width of pillar - 60 ft.

Wo = width of opening - 20 ft.

Wc = width of crosscut - 20 ft.

$$R = 1 - \left[\frac{(60)\ (60)}{(60 + 20)\ (60 + 20)}\right]$$

R = 0.4375

Sv = (170 pcf) (2000 ft.)

Sv = 340,000 psf

$$Sp = \frac{340{,}000 \text{ psf}}{(1 - 0.4375)}$$

Sp = <u>604444.4 psf or 4197 psi</u>

SIZE EFFECTS - PILLAR DESIGN

$$Cp = C_1 \left[0.778 + 0.222 \left(\frac{Wp}{Hp} \right) \right]$$

Cp = strength of pillar

C_1 = strength of coal specimen = 5252 psi

Wp = width of pillar = 60 ft.

Hp = height of pillar = 10 ft.

$$Cp = 5252 \text{ psi} \left[0.778 + 0.222 \left(\frac{60 \text{ ft}}{10 \text{ ft}} \right) \right]$$

$$Cp = 5252 \text{ psi } (2.11)$$

$$\underline{\underline{Cp = 11082 \text{ psi}}}$$

ROOF SPAN DESIGN

$$L_S = \sqrt{\frac{2 \, HTo}{\gamma \, Fs}}$$

T_O = tensile strength of siltstone - 500 psi*

H = thickness of the rock beam - 6ft.

γ = density of the siltstone - 166 pcf

F_S = factor of safety - 5

L_S = safe roof span

$$L_S = \sqrt{\frac{2 \text{ (6 ft) (500 psi) (144 in}^2/\text{ft}^2)}{\text{(166 pcf) (5)}}}$$

$$\underline{\underline{L_S = 32.3 \text{ ft.}}}$$

These calculations show that the pillars and the roof span are adequate to support the overlying rock.

*This figure represents the low end of the tensile strength spectrum.

STREAM CHANNEL CROSSING STABILITY

Maximum depth - 1250 feet

Pillar size 60 feet x 60 feet

Pillar height 10 feet

$$Sp = \frac{Sv}{1-R}$$

$$R = 1 - \left[\frac{(Lp)\ (Wp)}{(Lp + Wc)\ (Wp + Wo)}\right]$$

$$R = 1- \left[\frac{(60)\ (60)}{(60 + 20)\ (60 + 20)}\right]$$

$$R = 0.4375$$

S_V = (170 pounds per cubic feet) (1250 feet)

S_V = 212,500 pounds per square foot

S_V = 1475.7 pounds per square inch

$$S_p = \frac{1475.7}{1 - 0.4375}$$

S_p = 2623.5 pounds per square inch (pillar stress)

C_1 = 5252 pounds per square inch (coal strength)

Safety Factor = C_1/S_p

$$\frac{5252}{2623.5} = \underline{\underline{2.0}}$$

This safety factor will increase due to pillar size effects increasing the strength of the pillar.

$$C_p = C_1 \left[0.778 + 0.222 \frac{W_p}{H_p} \right]$$

$$C_p = 5252 \left[0.778 + 0.222 \frac{(60)}{(10)} \right]$$

$$C_p = 11082 \text{ pounds per square inch}$$

$$\text{Safety Factor} = \frac{11082}{2623.5} = \underline{\underline{4.2}}$$

CUBE TEST ON SOLDIER CANYON MINE

January 26, 1982

By R. DeWaele

SAMPLE NUMBER	WIDTH (IN)	DEPTH (IN)	HEIGHT (IN)	VOLUME (CM^3)	WEIGHT (GM)	SPECIFIC GRAVITY	BREAKING LOAD (LB)	STRENGTH (PSI)	X-SEC AVE (IN^2)
1	2.049	2.064	1.965	136.179	178.3	1.309	26250	6207	4.229
2	2.048	2.051	2.001	137.759	178.3	1.294	24950	5940	4.200
3	2.024	2.051	2.006	136.470	175.5	1.286	24400	5878	4.151
4	2.028	2.056	1.993	136.163	176.3	1.295	14875	3567	4.170
5	2.071	2.024	2.004	137.613	173.5	1.261	23050	5499	4.192
6	2.055	2.045	1.996	137.488	177.0	1.287	20050	4771	4.202
7	2.057	2.047	2.002	138.159	178.2	1.290	21625	5135	4.211
8	2.049	2.053	1.992	137.349	177.3	1.291	16025	3809	4.207
9	2.059	2.045	1.990	137.344	181.7	1.323	31400	7457	4.211
10	2.053	2.059	1.988	137.734	183.1	1.329	19515	4617	4.227
11	2.043	2.053	1.990	136.819	174.6	1.276	19400	4625	4.194
12	2.043	2.065	1.996	138.016	184.6	1.338	23175	5493	4.219
13	2.041	2.057	2.002	137.763	176.7	1.283	24025	5723	4.198
14	2.035	2.059	2.000	137.350	176.0	1.281	25100	5990	4.190
15	2.059	2.043	2.001	137.946	177.4	1.291	23350	5550	4.207
16	2.031	2.061	1.998	137.091	175.1	1.277	23750	5674	4.186
17	2.031	2.049	2.001	136.492	175.0	1.282	25800	6199	4.162
18	2.030	2.055	2.004	136.967	177.4	1.295	19025	4560	4.172
19	2.063	2.047	1.998	138.204	185.0	1.339	16400	3883	4.223
20	2.033	2.061	2.002	137.466	182.7	1.329	18625	4445	4.190
							Avg.	5252	