DRAWING NO. 1312-F-001

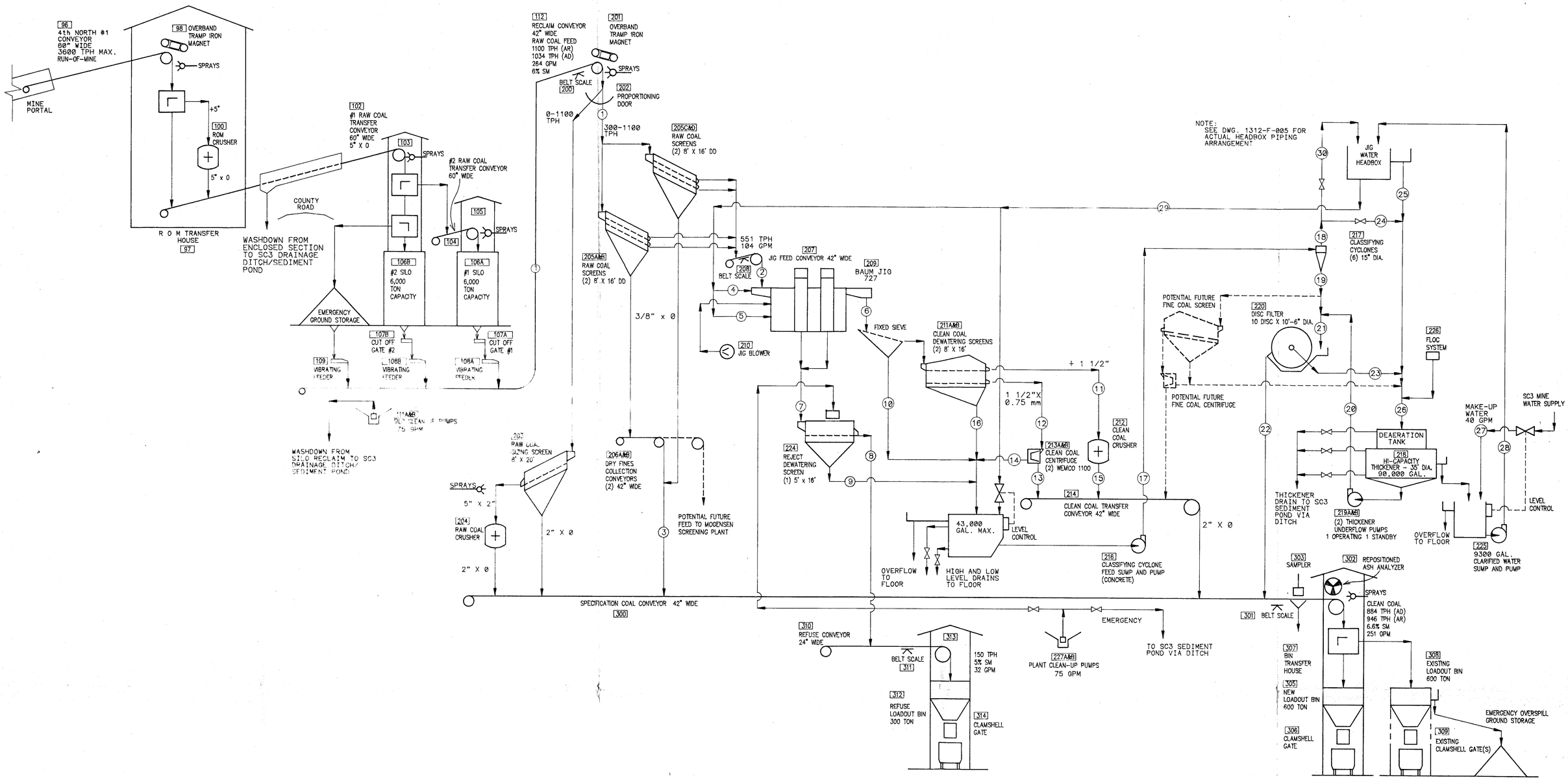

PRODUCT BALANCE TABLE (AIR DRY TONS)

MATERIAL	IN SOLIDS TPH	IN WATER gpm	MATERIAL	OUT SOLIDS TPH	OUT WATER gpm
RAW COAL	1034	264	RAW FINES	483	160
MAKE UP		19	CRUSHED CLEAN	96	10
			CENTRIF. CLEAN	284	54
			RAW FILTER CAKE	21	27
			REFUSE	150	32
TOTAL	1034	283	TOTAL	1034	283

DESIGN BASIS (AIR DRY BASIS)

SIZE FRACTION	ACTUAL DESIGN TPH	ACTUAL MAX TPH	CARRYOVER DESIGN TPH	CARRYOVER MAX TPH	CC YIELD DESIGN TPH	CC YIELD MAX TPH	RAW FINES DESIGN TPH	RAW FINES MAX TPH	REFUSE DESIGN TPH	REFUSE MAX TPH
5" X 3/8"	465	550			319	495	0		98	
3/8" X 1/4"	103		16		14		88		1	
1/4" X 28mesh	341		51		47		290		4	
28mesh x 0	125		19		19		106		0	
TOTAL	1034		86	100	399	500	484	550	103	226

FLOW	1	2	3	4	5	6	7	8	9	10	11	12	13	14	15	16	17	18	19	20	21	22	23	24	25	26	27	28	29	30	FLOW
MATERIAL	RAW COAL	RAW COAL	RAW COAL	WATER	WATER	CLEAN COAL	REJECT	REJECT	EFFLUENT	WATER	CLEAN COAL	CLEAN COAL	CLEAN COAL	EFFLUENT	CLEAN COAL	CLEAN COAL	CLEAN COAL	CLEAN COAL	CLEAN COAL	RAW COAL	RAW COAL	RAW COAL	EFFLUENT	REC WATER	REC WATER	REC WATER	MAKE UP	CLAR WATER	EFFLUENT	REC WATER	MATERIAL
SIZE	5" X 0	5" X 3/8"	3/8" X 0			5" X 3/8"	5" X 3/8"	5" X 3/8"			+1 1/2"	1 1/2" x 0.75mm	1 1/2" x 0.75mm		1 1/2" x 0.75mm	0.75mm x 0	0.75mm x 0	100mesh x 0	0.75mm x 100mesh	100mesh x 0	0.75mm x 0	0.75mm x 0				100mx0					SIZE
AVG SOLIDS TPH (AD)	1034	551	483	2	8	409	152	150	2	10	96	285	285	0	96	19	31	20	11	10	21	21		10	0	10		0	10	10	AVG SOLIDS TPH (AD)
MAX SOLIDS TPH (AD)	1034	621	545			540	226	226	3	10	143	385	385	0	143	24	37	26	16	16	32	32		16		16		0	13		MAX SOLIDS TPH (AD)
% SURFACE MOISTURE	6.0 %	4.5%	7.7%	99.0%	99.0%	70.1%	10.0%	5.0%	81.8%	96.2%	2.5%	12.0%	4.5%		2.5%	97.3%	96.9%	97.9%	70.0%	70.0%	70.0%	25.0%		97.9%	100.0%	98.2%	100.0%	0.0%	99.0%	97.9%	% SURFACE MOISTURE
WATER/MEDIUM GPM	264	104	160	760	3040	3836	67	32	36	1000	10	155	54	102	10	2671	3809	3707	101	91	192	27	165	1877	100	2142	19	2069	3800	1831	WATER/MEDIUM GPM
SOLIDS SG	1.54	1.54	1.54	1.54	1.54	1.38	1.87	1.87	1.87	1.38	1.38	1.38	1.38		1	1.40	1.40	1.40	1.40	1.40	1.40	1.40		1.40		1.40			1.40	1.45	SOLIDS SG
PULP GPM	2950	1534	1416	765	3061	5021	392	352	40	1029						2724	3915	3764	132	119	251			1922		2187				1858	PULP GPM
PULP SG				1.00	1.00	1.09				1.01						1.01	1.01	1.01	1.09	1.09	1.09			1.01		1.01			1.00	1.01	PULP SG
% SOLIDS (BY WT.)	94.0%	95.5%	92.3%	1.0%	1.0%	29.9%	90.0%	95.0%	18.2%	3.8%	97.5%	88.0%	95.5%	100.0%	97.5%	2.7%	3.1%	2.1%	30.0%	30.0%	30.0%	75.0%	100.0%	2.1%	0.0%	1.8%	0.0%	100.0%	1.0%	2.1%	% SOLIDS (BY WT.)

RECEIVED
JUN 10 1991
DIVISION OF OIL GAS & MINING

FIGURE 10.2.3-1

Soldier Creek Coal Company

SOLDIER CANYON MINE

REF. DWG. NO.	TITLE	REV.	REF. DWG. NO.	TITLE	REV.

	REVISION	DATE	APPROVAL	DATE
H				
J				
K				
L				
M				
N				
P				

	REVISION	DATE	APPROVAL	DATE
A	REVISED PER SC3 AGREEMENT	12/4/90		
B	#211 BTTM DECK WAS 0.68mm, DELETED ROM SCREEN	1/3/91		
C	REVISED SILO NOS., THICKENER DIA.	3/15/91		
D	LIQUID QUANTITYS,SUMP FLOWS	5/2/91		
E				
F				
G				

NorWest
RESOURCE CONSULTANTS, INC.
Calgary Salt Lake City Cincinnati

PROJECT: MINE SURFACE FACILITIES	PROJECT NO. 90-1312	ISSUED	
LOCATION: SOLDIER CANYON MINE	DESIGNED BY DFS	DRAWN BY MS/JM	
	DATE	DATE 10/26/90	
CUSTOMER: SOLDIER CREEK COAL COMPANY	CHECKED BY	APPROVED BY	
	DATE	DATE	
TITLE: FLOWSHEET INCORPORATING BAUM JIG PREPARATION PLANT	DRAWING NO. 1312-F-001	SCALE NONE	REV. D