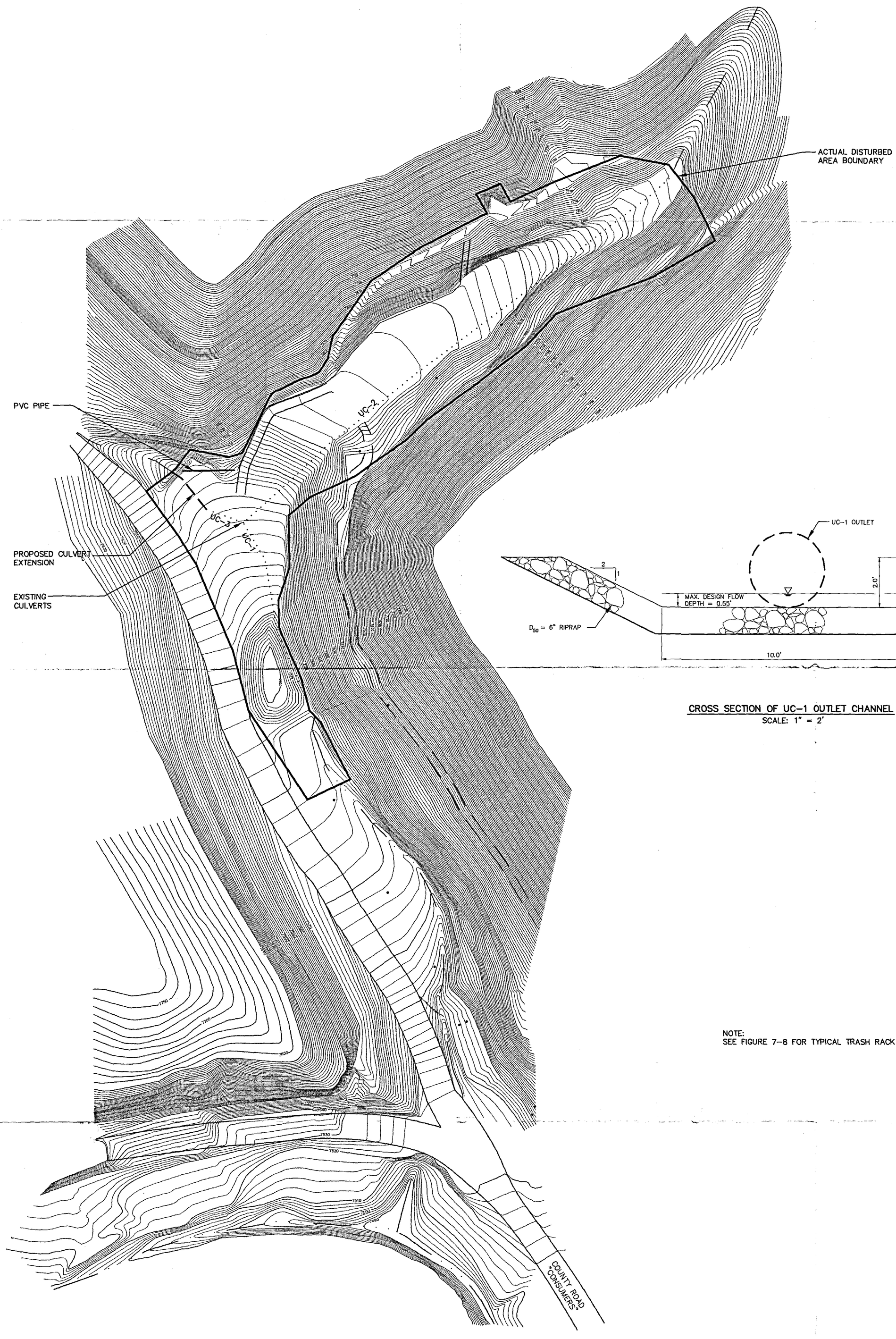

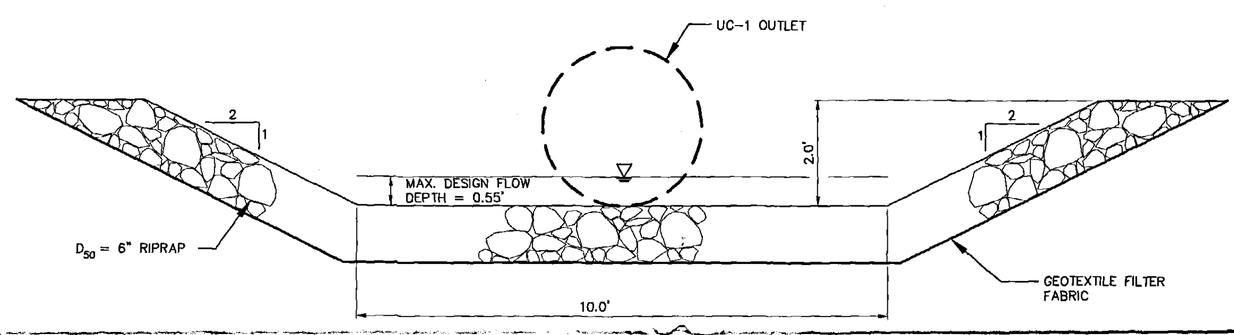

CROSS SECTION OF UC-1 OUTLET CHANNEL
SCALE: 1" = 2'

NOTE:
SEE FIGURE 7-8 FOR TYPICAL TRASH RACK DETAIL.

0' 100'
APPROXIMATE SCALE

INCORPORATED
EFFECTIVE:
FEB 25 1998
0773
DIVISION OIL, GAS AND MINING
PRICE FIELD OFFICE

REGISTERED PROFESSIONAL ENGINEER
No. 168246
RICHARD B. WHITE
1/30/98
STATE OF UTAH

REVISION	
1/98	VSB

DRAWING A

PROPOSED CULVERT EXTENSION

HORIZON MINE

HORIZON COAL CORPORATION
P.O. BOX 599
HELPER, UTAH 84526

DRAWN BY: SWF	CHECKED BY: RBW	DATE: 9-1-97
APPROVED BY: VSB	AUTOCAD FILE: G:\UC572\02\DWG\DWG-A.DWG	

EarthFax Engineering, Inc.