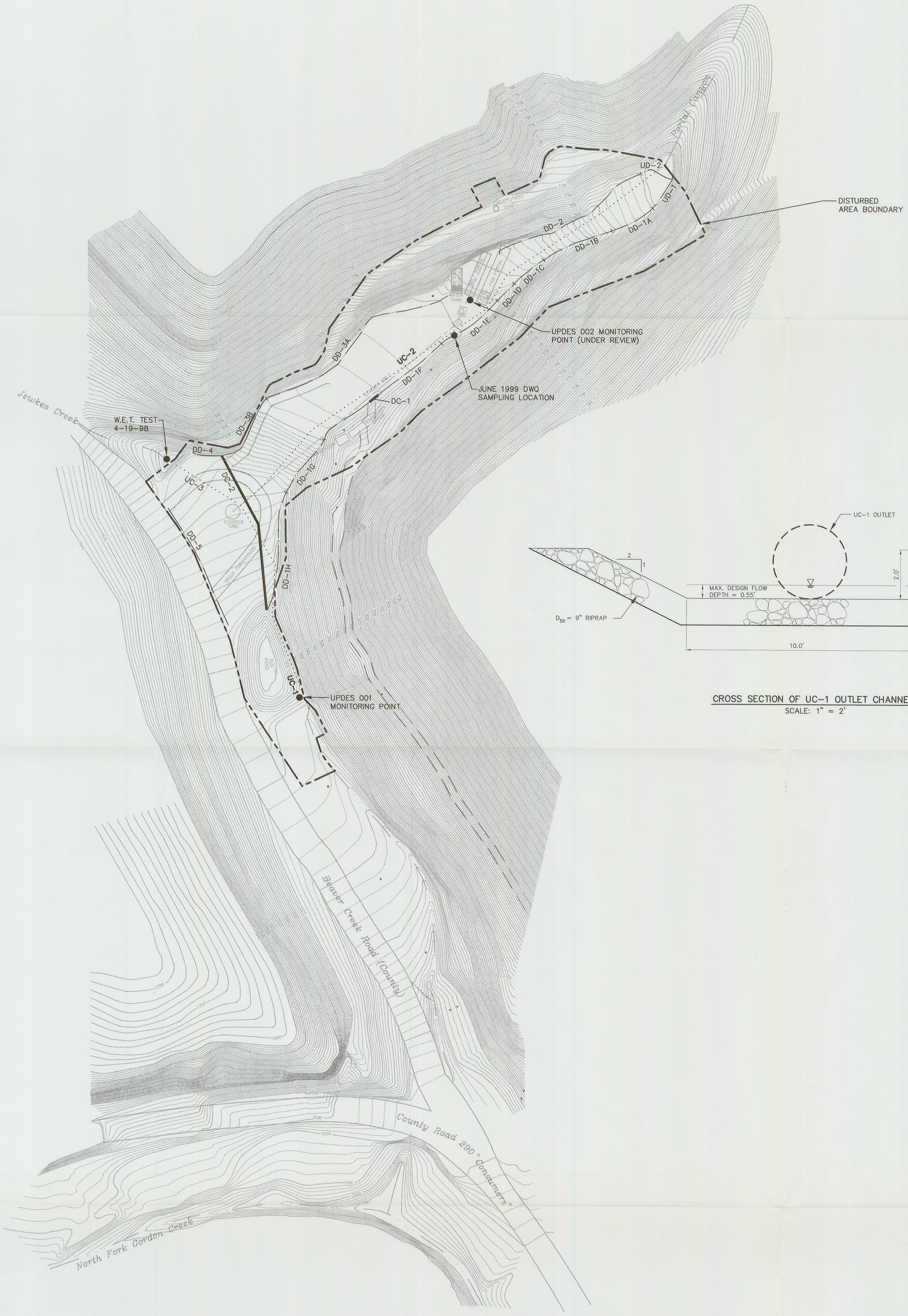

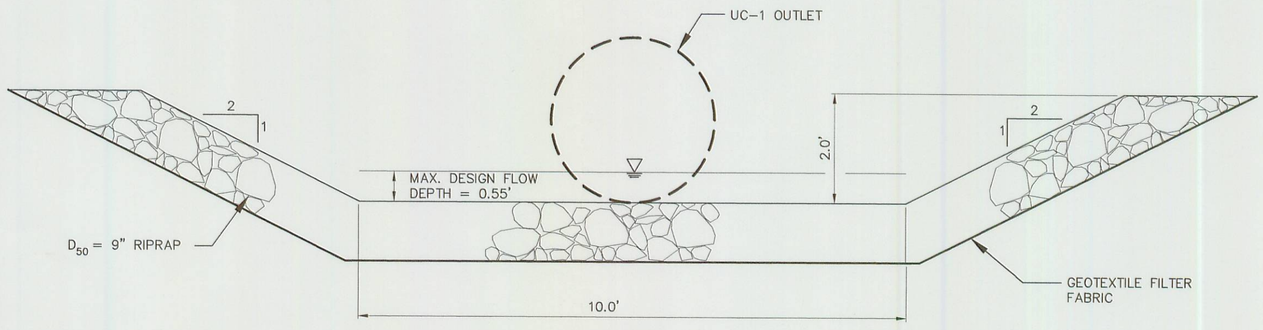

CROSS SECTION OF UC-1 OUTLET CHANNEL
SCALE: 1" = 2'

LEGEND

- UNIMPROVED ROAD
- IMPROVED GRAVEL ROAD
- STREAMS AND DITCHES
- UC-1 — UNDISTURBED CULVERT
- DC-1 — DISTURBED CULVERT
- DD-1 — DRAINAGE DITCH

0' 100'

RECEIVED AUG - 4 1999 DIV. OF OIL, GAS & MINING

REGISTERED PROFESSIONAL ENGINEER No. 168246 RICHARD B. WHITE 7/27/99 STATE OF UTAH

File in: ☐ Confidential ☐ Shelf ☒ Expandable
Refer to Record No. 0066 Date 08031999
In C/007/0070, 1999, Working
For additional information

REVISION	
5-31-99	VSB

APPENDIX 7-2 ATTACHMENT A PLATE A

DRAINAGE DIVERSIONS

HORIZON MINE
HORIZON MINING, LLC
P.O. BOX 599
HELPER, UTAH 84526

DRAWN BY: SWF | CHECKED BY: VSB | 2-6-97
APPROVED BY: RBW | AUTOCAD FILE: G:\UC572\1999\WORKING\WATER\APP7-2AA.DWG 6-17-99

EarthFax Engineering, Inc.