MOUNTAIN COAL COMPANY

1991 ANNUAL REPORT

C.V. SPUR

Mountain Coal Company
Trail Mountain Mine
Post Office Box 1378
Price, Utah 84501
Telephone 801 637-5050 (Price Office)
801 637-5203 (Mine Office)
801 748-2140 (Mine Site)

RECEIVED
APR 15 1992
DIVISION OF OIL
GAS & MINING PRICE UTAH

April 8, 1992

Mr. Lowell Braxton
Administrator
Division of Oil, Gas & Mining
355 West North Temple
3 Triad Center, Suite 350
Salt Lake City, Utah 84180-1203

Re: 1991 Annual Report
C.V. Spur Loadout Facility
ACT/007/022
Carbon County, Utah

Dear Mr. Braxton:

Enclosed is the Annual Report for Coal Mining and Reclamation Operations for 1991 for the C.V. Spur.

If you have any questions or need any further information, please let me know.

Respectfully,

Dan W. Guy

Dan W. Guy,
Manager, Permitting & Compliance

DWG/cr

cc: Rick Parkins
Johnny Coffey

Annual Reports Review

Mine Name C.V. Spur

Date Submitted April 15, 1992

Sections to be reviewed:

Cover Sheet and Mine Sequence Map - Jesse
Date Reviewed _____

Summarized Water Monitoring Data - Ken
Date Reviewed gave Ken disk 4/17/92

Precipitation and Climatological Data - Ken
Date Reviewed _____

Subsidence Monitoring Report - Jesse
Date Reviewed N/A

Vegetation Data and Revegetation Success Monitoring - Susan
Date Reviewed _____

Annual Impoundment Certification - Jesse
Date Reviewed _____

Annual Overburden, Spoil, Refuse, Roof, Floor, etc - Henry
Date Reviewed N/A

RECEIVED
APR 15 1992
DIVISION OF OIL
GAS & MINING PRICE UTAH

MOUNTAIN COAL COMPANY

1991 ANNUAL REPORT

C.V. SPUR

Mountain Coal Company
Trail Mountain Mine
Post Office Box 1378
Price, Utah 84501
Telephone 801 637-5050 (Price Office)
801 637-5203 (Mine Office)
801 748-2140 (Mine Site)

April 8, 1992

Mr. Lowell Braxton
Administrator
Division of Oil, Gas & Mining
355 West North Temple
3 Triad Center, Suite 350
Salt Lake City, Utah 84180-1203

Re: 1991 Annual Report
C.V. Spur Loadout Facility
ACT/007/022
Carbon County, Utah

Dear Mr. Braxton:

Enclosed is the Annual Report for Coal Mining and Reclamation Operations for 1991 for the C.V. Spur.

If you have any questions or need any further information, please let me know.

Respectfully,

Dan W. Guy

Dan W. Guy,
Manager, Permitting & Compliance

DWG/cr

cc: Rick Parkins
Johnny Coffey

Norman H. Bangerter
Governor
Dee C. Hansen
Executive Director
Dianne R. Nielson, Ph.D.
Division Director

State of Utah

DEPARTMENT OF NATURAL RESOURCES
DIVISION OF OIL, GAS AND MINING

355 West North Temple
3 Triad Center, Suite 350
Salt Lake City, Utah 84180-1203
801-538-5340

March 27, 1992

Mr. Dan Guy, Manager
Mountain Coal Company
P.O. Box 1378
Price, Utah 84501

Dear Mr. Guy:

Re: Extension Granted, Annual Reports, Gordon Creek #2, #7, and #8 Mine, ACT/007/016, Gordon Creek #3 and #6 Mine, ACT/007/017, C.V. Spur Loadout and Processing Facility, ACT/007/022, Huntington #4 Mine, ACT/015/004, Trail Mountain Mine, ACT/015/009, Folder #3, Carbon and Emery County, Utah

An extension is granted per your verbal request for submittal of the annual reports for the above-noted coal mining and reclamation operations until April 15, 1992.

Sincerely,

Pamela Grubaugh-Littig
Permit Supervisor

an equal opportunity employer

COAL MINING AND RECLAMATION OPERATIONS FOR 1991

(Must be submitted to the Division by March 31, 1992)

State of Utah
Department of Natural Resources
Division of Oil, Gas and Mining
3 Triad Center, Suite 350
355 West North Temple
Salt Lake City, Utah 84180-1203
(801) 538-5340

Permittee: Mountain Coal Company

Mine Name: C.V. Spur Loadout Facility

Mailing Address: P.O. Box 1378. Price. Utah 84501

Company Representative: Dan W. Guy

Resident Agent: Dan W. Guy

Permit Number: ACT/007/002

MSHA ID Number: 42-01444

Date of Initial Permanent Program Permit: 9/24/81

Date of Permit Renewal: 9/12/91 (Expires 8/7/94)

Quantity of Coal Mined (tonnage) 1991: 866.041 Tons (Shipped)

Attach Updated Mine Sequence Map (N/A)
(Same as Lease Royalty Payment Map and/or MSHA Progress Map)

All monitoring activities during the report period to be submitted with this report (including, but not limited to):

A. **Summarized Water Monitoring Data:** (Enclosed)

1. **List of monitoring points and their locations and respective frequencies of monitoring (monthly, quarterly, etc.) as approved in the PAP**
2. **UPDES permit number, UPDES discharge points and their locations**
3. **Summary of findings based on water monitoring during 1991**
4. **Submit water monitoring as database files (ASCII, Lotus, dBase, etc.) (Please contact Ken Wyatt if you have any questions)**

B. **Precipitation or Other Climatological Data (please submit as database files: ASCII, Lotus, dBase, etc.-- Contact Ken Wyatt if you have any questions)**

C. **Subsidence Monitoring Report:** (N/A)

1. **Brief description of monitoring system (monuments or aerial surveys, how monitoring is done, how frequently monitoring is done)**
2. **List of all monitoring points (if any) and their locations and amount of displacement of each**
3. **Map showing either monitoring points (if any) or a representation of subsidence which has occurred**
4. **Any owners and/or occupants of surface property and structures above the underground workings who were or will be mailed notification six months prior to mining (R614-301-525.300)**

D. **Vegetation Data (test plots) or Revegetation Success Monitoring (includes interim and final):**

1. **Test plot monitoring data or implementation**
2. **Quantitative results from interim or final seeding efforts**
3. **If quantitative monitoring was not required, then at minimum, a qualitative description of the interim or final vegetation**
4. **Describe any seeding done on site during the current year**

E. **Annual Impoundment Certification, (R614-301-514.312) which includes the following information:**

1. **Any appearances of instability**
2. **Structural weakness or other hazardous conditions**
3. **Depth and elevation of any impounded waters**
4. **Existing storage capacity**
5. **Any existing or required monitoring procedures and instrumentation**
6. **Any other aspects of the structure affecting stability**

Suggested form enclosed

F. **Annual Overburden, Spoil, Refuse, Roof, Floor, and Mid-Seam Data. For Consistency and completeness, please submit data for this reporting requirement in the following manner:**

1. **Location of sample site, sample interval, and sample matrix (if roof or floor, then include lithologic unit and if coal, then thickness of seam at sample site)**
2. **Sampling technique employed in the field (i.e., grab sample, composite, depth segregated or specific procedure outlined in the permit by chapter and page) and preparation prior to analysis (i.e., sieved sample, ground sample, air dried, oven dried, etc.)**
3. **Laboratory analysis report sheet which includes:**
   i. **Sample time and date**
   ii. **Date and time of lab analysis**
   iii. **Analytical method(s) employed and references. Include the soil/spoil: water ratio.**
4. **Summary of findings based on monitoring**

G. **Any Other Information Required to be Submitted as Specified in your Permit Application Package and Permit**

jbe
A:/Annual

PERMIT

FEDERAL

PERMIT
ACT/007/022

September 12, 1991

STATE OF UTAH
DEPARTMENT OF NATURAL RESOURCES
DIVISION OF OIL, GAS AND MINING
355 West North Temple
3 Triad Center, Suite 350
Salt Lake City, Utah 84180-1203
(801) 538-5340

This permit, ACT/007/022, is issued for the State of Utah by the Utah Division of Oil, Gas and Mining (Division) to:

Mountain Coal Company
P.O. Box 1378
Price, Utah 84501
(801) 637-5050

for the C.V. Spur Coal Processing and Loadout Facility. Mountain Coal Company is the owner of certain fee-owned parcels. A Surety Bond is filed with the Division in the amount of $2,441,745, payable to the State of Utah, Division of Oil, Gas and Mining, and the Office of Surface Mining, Reclamation and Enforcement (OSM). The Division must receive a copy of this permit signed and dated by the permittee.

Sec. 1 **STATUTES AND REGULATIONS** - This permit is issued pursuant to the Utah Coal Mining and Reclamation Act of 1979, Utah Code Annotated (UCA) 40-10-1 et seq, hereafter referred to as the Act.

Sec. 2 **PERMIT AREA** - The permittee is authorized to conduct underground coal mining activities on the following described lands within the permit area at the C.V. Spur Coal Processing and Loadout Facility, situated in the State of Utah, Emery County, and located:

Township 15 South Range 10 East, Section 11, SLBM

W1/2 SW1/4 except 0.24 acres in the northwest corner, NE1/4 SW1/4 except East 100 ft., SE1/4 SW1/4, except East 100 ft.

This legal description is for the permit area of the C.V. Spur Coal Processing and Loadout Facility. The permittee is authorized to conduct underground coal mining activities and related surface activities on the foregoing described property subject to the conditions of all applicable conditions, laws and regulations.

Sec. 3 **COMPLIANCE** - The permittee will comply with the terms and conditions of the permit, all applicable performance standards and requirements of the State Program.

Sec. 4 **PERMIT TERM** - This permit becomes effective on September 12, 1991, and expires on August 7, 1994.

Sec. 5 **ASSIGNMENT OF PERMIT RIGHTS** - The permit rights may not be transferred, assigned or sold without the prior written approval of the Division Director. Transfer, assignment or sale of permit rights must be done in accordance with applicable regulations, including but not limited to 30 CFR 740.13{e} and R614-303-300.

Sec. 6 **RIGHT OF ENTRY** - The permittee shall allow the authorized representative of the Division, including but not limited to inspectors, and representatives of the Office of Surface Mining Reclamation and Enforcement (OSM), without advance notice or a search warrant, upon presentation of appropriate credentials, and without delay to:

(a) have the rights of entry provided for in 30 CFR 840.12, R614-400-220, 30 CFR 842.13 and R614-400-110;

(b) be accompanied by private persons for the purpose of conducting an inspection in accordance with R614-400-100 and R614-400-200 when the inspection is in response to an alleged violation reported to the Division by the private person.

Sec. 7 **SCOPE OF OPERATIONS** - The permittee shall conduct underground coal mining activities only on those lands specifically designated as within the permit area on the maps submitted in the approved plan and approved for the term of the permit and which are subject to the performance bond.

Sec. 8 **ENVIRONMENTAL IMPACTS** - The permittee shall take all possible steps to minimize any adverse impact to the environment or public health and safety resulting from noncompliance with any term or condition of the permit, including, but not limited to:

(a) Any accelerated or additional monitoring necessary to determine the nature and extent of noncompliance and the results of the noncompliance;

(b) immediate implementation of measures necessary to comply; and

(c) warning, as soon as possible after learning of such noncompliance, any person whose health and safety is in imminent danger due to the noncompliance.

Sec. 9 **CONDUCT OF OPERATIONS** - The permittee shall conduct its operations:

(a) in accordance with the terms of the permit to prevent significant, imminent environmental harm to the health and safety of the public; and

(b) utilizing methods specified as conditions of the permit by the Division in approving alternative methods of compliance with the performance standards of the Act, the approved Utah State Program and the Federal Lands Program.

Sec. 10 **EXISTING STRUCTURES** - As applicable, the permittee will comply with R614-301 and R614-302 for compliance, modification, or abandonment of existing structures.

Sec. 11 **RECLAMATION FEE PAYMENTS** - The operator shall pay all reclamation fees required by 30 CFR Part 870 for coal produced under the permit, for sale, transfer or use.

Sec. 12 **AUTHORIZED AGENT** - The permittee shall provide the names, addresses and telephone numbers of persons responsible for operations under the permit to whom notices and orders are to be delivered.

Sec. 13 **COMPLIANCE WITH OTHER LAWS** - The permittee shall comply with the provisions of the Water Pollution Control Act (33 USC 1151 et seq,) and the Clean Air Act (42 USC 7401 et seq), UCA 26-11-1 et seq, and UCA 26-13-1 et seq.

Sec. 14 **PERMIT RENEWAL** - Upon expiration, this permit may be renewed for areas within the boundaries of the existing permit in accordance with the Act, the approved Utah State Program and the Federal Lands Program.

Sec. 15 **CULTURAL RESOURCES** - If during the course of mining operations, previously unidentified cultural resources are discovered, the permittee shall ensure that the site(s) is not disturbed and shall notify the Division. The Division, after coordination with OSM, shall inform the permittee of necessary actions required. The permittee shall implement the mitigation measures required by Division within the time frame specified by Division.

Sec. 16 APPEALS - The permittee shall have the right to appeal as provided for under R614-300-200.

The above conditions (Secs. 1-16) are also imposed upon the permittee's agents and employees. The failure or refusal of any of these persons to comply with these conditions shall be deemed a failure of the permittee to comply with the terms of this permit and the lease. The permittee shall require his agents, contractors and subcontractors involved in activities concerning this permit to include these conditions in the contracts between and among them. These conditions may be revised or amended, in writing, by the mutual consent of the Division and the permittee at any time to adjust to changed conditions or to correct an oversight. The Division may amend these conditions at any time without the consent of the permittee in order to make them consistent with any federal or state statutes and any regulations.

THE STATE OF UTAH

By: Dennis R. Nelson

Date: 9-12-91

I certify that I have read, understand and accept the requirements of this permit and any special conditions attached.

Richard P. Rich

Authorized Representative of the Permittee

Date: 10/15/91

A:\PERMIT.CVS

Norman H. Bangerter
Governor
Dee C. Hansen
Executive Director
Dianne R. Nielson, Ph.D.
Division Director

State of Utah

DEPARTMENT OF NATURAL RESOURCES
DIVISION OF OIL, GAS AND MINING

355 West North Temple
3 Triad Center, Suite 350
Salt Lake City, Utah 84180-1203
801-538-5340

August 7, 1989

Mr. Richard D. Pick, President
Mountain Coal Operations
Beaver Creek Coal Company
P. O. Box 1378
Price, Utah 84501

Dear ~~Mr. Pick~~ Dick:

Re: State Permit and Decision Package, Five-Year Permit Renewal, Beaver Creek Coal Company, C. V. Spur Coal Processing and Loadout Facility, ACT/007/022, Folder #3, Carbon County, Utah

Enclosed are two State Permits and a Decision Package for the C. V. Spur Coal Processing and Loadout Facility Five-Year Permit Renewal. Please read the Stipulations in Attachment A of the State Permit, then sign both State Permits and return one to the Division.

Your staff's cooperation during the permitting process has been appreciated.

Best regards,

Dianne

Dianne R. Nielson
Director

RVS/djh
Enclosure
cc: P. Rutledge, OSM-Denver
R. Hagen, OSMRE-Albq.
AT8/68

an equal opportunity employer

STATE OF UTAH
DEPARTMENT OF NATURAL RESOURCES
DIVISION OF OIL, GAS AND MINING
355 West North Temple
3 Triad Center, Suite 350
Salt Lake City, Utah 84180-1203
(801) 538-5340

This permit, ACT/007/022, is issued for the state of Utah by the Utah Division of Oil, Gas and Mining (DOGM) to:

Beaver Creek Coal Company
P. O. Box 1378
Price, Utah 84501
(801) 637-5050

for the C.V. Spur Coal Processing and Loadout Facility. Beaver Creek Coal Company is the owner of certain fee-owned parcels. A performance bond is filed with the DOGM in the amount of $2,441,745.00, payable to the state of Utah, Division of Oil, Gas and Mining and the Office of Surface Mining Reclamation and Enforcement (OSMRE). DOGM must receive a copy of this permit signed and dated by the permittee.

Sec. 1 **STATUTES AND REGULATIONS** - This permit is issued pursuant to the Utah Coal Mining and Reclamation Act of 1979, Utah Code Annotated (UCA) 40-10-1 et seq, hereafter referred to as the Act.

Sec. 2 **PERMIT AREA** - The permittee is authorized to conduct underground coal mining activities on the following described lands (as shown on the map appended as C.V. Spur Coal Processing and Loadout Facility, Attachment B) within the permit area at the C. V. Spur Coal Processing and Loadout Facility, situated in the state of Utah, Carbon County, and located:

<u>Township 15 South, Range 10 East, Section 11, SLBM</u>

W1/2 SW1/4 except 0.24 acres in the northwest corner, NE1/4 SW1/4 except East 100 ft., SE1/4 SW1/4, except East 100 ft.

This legal description is for the permit area (as shown on Attachment B) of the C.V. Spur Coal Processing and Loadout Facility. The permittee is authorized to conduct underground coal mining operations and related surface activities on the foregoing described property subject to the conditions of applicable conditions, laws and regulations.

Sec. 3 **PERMIT TERM** - This permit becomes effective on August 7, 1989 and expires on August 7, 1994.

Sec. 4 **ASSIGNMENT OF PERMIT RIGHTS** - The permit rights may not be transferred, assigned or sold without the approval of the Director, DOGM. Transfer, assignment, or sale of permit rights must be done in accordance with applicable regulations, including but not limited to 30 CFR 740.13(e) and UMC 788.17-.19.

Sec. 5 **RIGHT OF ENTRY** - The permittee shall allow the authorized representative of the DOGM, including but not limited to inspectors, and representatives of OSMRE, without advance notice or a search warrant, upon presentation of appropriate credentials, and without delay to:

A. have the rights of entry provided for in 30 CFR 840.12, UMC 840.12, 30 CFR 842.13 and UMC 842.13; and

B. be accompanied by private persons for the purpose of conducting an inspection in accordance with UMC 842.12 and 30 CFR 842, when the inspection is in response to an alleged violation reported by the private person.

Sec. 6 **SCOPE OF OPERATIONS** - The permittee shall conduct underground coal mining activities only on those lands specifically designated as within the permit area on the maps submitted in the mining and reclamation plan and permit application and approved for the term of the permit and which are subject to the performance bond.

Sec. 7 **ENVIRONMENTAL IMPACTS** - The permittee shall minimize any adverse impact to the environment or public health and safety through but not limited to:

A. accelerated monitoring to determine the nature and extent of noncompliance and the results of the noncompliance;

B. immediate implementation of measures necessary to comply; and

C. warning, as soon as possible after learning of such noncompliance, any person whose health and safety is in imminent danger due to the noncompliance.

Sec. 8 **DISPOSAL OF POLLUTANTS** - The permittee shall dispose of solids, sludge, filter backwash or pollutants in the course of treatment or control of waters or emissions to the air in the manner required by the approved Utah State Program and the Federal Lands Program which prevents violation of any applicable state or federal law.

Sec. 9 **CONDUCT OF OPERATIONS** - The permittee shall conduct its operations:

A. in accordance with the terms of the permit to prevent significant, imminent environmental harm to the health and safety of the public; and

B. utilizing methods specified as conditions of the permit by DOGM in approving alternative methods of compliance with the performance standards of the Act, the approved Utah State Program and the Federal Lands Program.

Sec. 10 **AUTHORIZED AGENT** - The permittee shall provide the names, addresses and telephone numbers of persons responsible for operations under the permit to whom notices and orders are to be delivered.

Sec. 11 **COMPLIANCE WITH OTHER LAWS** - The permittee shall comply with the provisions of the Water Pollution Control Act (33 USC 1151 et seq,) and the Clean Air Act (42 USC 7401 et seq), UCA 26-11-1 et seq, and UCA 26-13-1 et seq.

Sec. 12 **PERMIT RENEWAL** - Upon expiration, this permit may be renewed for areas within the boundaries of the existing permit in accordance with the Act and the approved Utah State Program and the Federal Lands Program.

Sec. 13 **CULTURAL RESOURCES** - If during the course of mining operations, previously unidentified cultural resources are discovered, the permittee shall ensure that the site(s) is not disturbed and shall notify DOGM. DOGM, after coordination with OSMRE, shall inform the permittee of necessary actions required. The permittee shall implement the mitigation measures required by DOGM within the time frame specified by DOGM.

Sec. 14 **APPEALS** - The permittee shall have the right to appeal as provided for under UMC 787.

Sec. 15 **SPECIAL CONDITIONS** - The permittee shall comply with the special conditions appended hereto as Attachment A.

The above conditions (Secs. 1-15) are also imposed upon the permittee's agents and employees. The failure or refusal of any of these persons to comply with these conditions shall be deemed a failure of the permittee to comply with the terms of this permit and the lease. The permittee shall require his agents, contractors and subcontractors involved in activities concerning this permit to include these conditions in the contracts between and among them. These conditions may be revised or amended, in writing, by the mutual consent of DOGM and the permittee at any time to adjust to changed conditions or to correct an oversight. DOGM may amend these conditions at any time without the consent of the permittee in order to make them consistent with any new federal or state statutes and any new regulations.

THE STATE OF UTAH

By: Dianne R. Nielson

Date: 8-7-89

I certify that I have read, understand and accept the requirements of this permit and any special conditions attached.

Richard L. Pick

Authorized Representative of the Permittee

Date: 8-7-89

APPROVED AS TO FORM:

By: David Wintzer

Assistant Attorney General

Date: 8/7/89

AT95/10-13

Attachment A

Utah Division of Oil, Gas and Mining
Five-Year Permit Renewal
C.V. Spur Coal Processing and Loadout Facility
ACT/007/022
August 7, 1989

Stipulation UMC 817.23-(HS)-(1)

1. Within 30 days of permit approval, the applicant must submit an as-built survey of the soil stockpiles. This survey must include the volume of topsoil stored, maximum and minimum heights, slopes, and all other pertinent dimensions.

ATTACHMENT B

PERMIT AREA

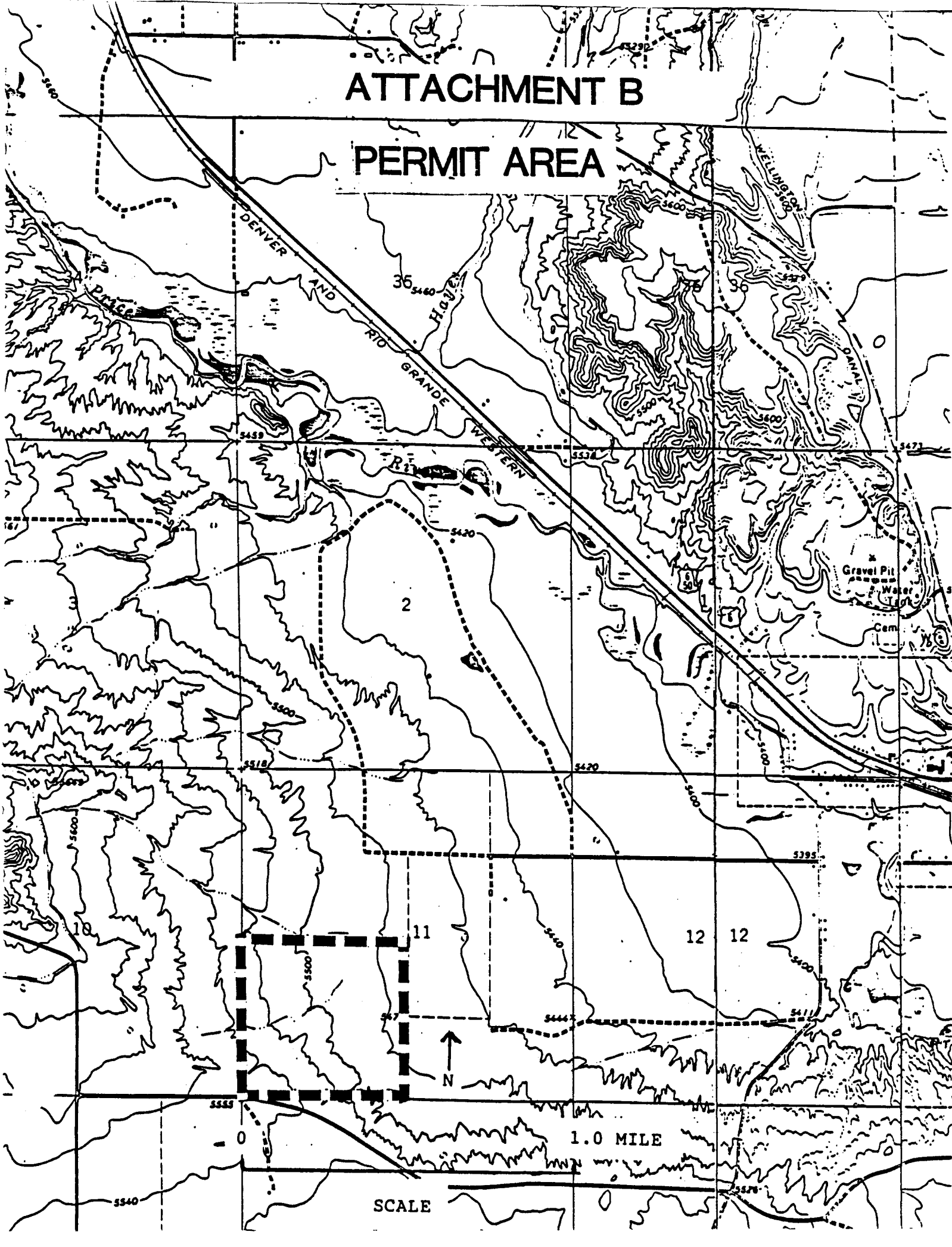

AMENDMENTS

BEAVER CREEK Coal Company
Post Office Box 1378
Price, Utah 84501
Telephone 801 637-5050

May 10, 1991

Mr. Lowell Braxton, Administrator
Utah Division of Oil, Gas & Mining
355 West North Temple
3 Triad Center, Suite 350
Salt Lake City, Utah 84180-1203

Re: Transfer of Permit
from Beaver Creek Coal Company
to Mountain Coal Company
and Lease Permit Application
C.V. Spur Processing
and Loadout Facility
ACT/007/022
Carbon County, Utah

Dear Mr. Braxton:

West Elk Coal Company, Inc. (Colorado) has been merged into Beaver Creek Coal Company (Utah). The name of Beaver Creek Coal Company has been changed to Mountain Coal Company. In addition, the name of the Trail Mountain No. 9 Mine has been changed to simply the Trail Mountain Mine.

By this letter, Mountain Coal Company requests approval of the assignment of the above referenced permits from Beaver Creek Coal Company to Mountain Coal Company, including the renaming of the mine from Trail Mountain No. 9 Mine to Trail Mountain Mine.

Pursuant to R614-303.300, Mountain Coal Company submits the following information and materials in support of its request for approval of the assignment:

(1) Name and address of the existing permittee:

Beaver Creek Coal Company
P.O. Box 1378
Price, Utah 84501

(2) Name and address of the assignee and assignee's resident agent:

(a) Assignee:

Mountain Coal Company
P.O. Box 1378
Price, Utah 84501

(b) Resident Agent:

The Corporation Trust Company
1209 Orange Street
Wilmington, Delaware 19801

(3 Permit Name and Number:

Trail Mountain No. 9 Mine
(changed to: Trail Mountain Mine)

Trail Mountain No. 9 Mine Lease Permit Application
(changed to: Trail Mountain Mine Lease Permit Application)

ACT/015/009

(4) Legal, Financial, Compliance and Related information required by R614-301-100:

See attached revised Permit Chapter II-Legal, Financial, Compliance and Related Information.

In making this request, Mountain Coal Company agrees to continue operations in compliance with the terms and conditions of the existing permit. Concurrently, with the filing of this request, Mountain Coal Company has submitted for advertisement a notice of the filing of this request. The advertisement will be in the form included in the revised Chapter II.

I appreciate your consideration in this matter. If you have any questions, or need any further information, please let me know.

Respectfully,

Dan W. Guy /pd

Dan W. Guy
Mgr. Permitting/Compliance

cc: Dave Arnolds
Scott Jones
Dana Echter
File

OTHER PERMITS

Norman H. Bangerter
Governor
Suzanne Dandoy, M.D., M.P.H.
Executive Director
Kenneth L. Alkema
Director

State of Utah

DEPARTMENT OF HEALTH
DIVISION OF ENVIRONMENTAL HEALTH

288 North 1460 West
P.O. Box 16690
Salt Lake City, Utah 84116-0690
(801) 538-6121

May 1, 1989

Dan W. Guy
Manager of Permitting/Compliance
Beaver Creek Coal Company
P.O. Box 1378
Price, Utah 84501

Re: Issuance of General Permits for Coal Mining UTG040003, UTG040004 and UTG040005

Dear Mr. Guy:

We hereby acknowledge receipt by EPA and the State of five Notices of Intent (NOIs) for coverage under the Utah General Permit for Coal Mining. The NOI's for Beaver Creek Coal Company's Trail Mountain No. 9 Mine, Gordon Creek No. 2 Mine, Huntington Canyon No. 4 Mine, Gordon Creek No. 3 & 6 Mines and the CV Spur Processing/Loadout Facility are considered adequate. Three of the facilities will be issued a general permit and two of the existing facility permits will be inactivated because of completion of reclamation activities. Trail Mountain No. 9 Mine has been reassigned a new permit number UTG040003, Gordon Creek No. 2 Mine has been reassigned a new permit number UTG040004 and the CV Spur Processing/Loadout Facility has been assigned a new permit number UTG040005. Any future correspondence regarding these three facilities should refer to these numbers. The permits for Huntington Canyon No. 4 Mine UT0023116 and Gordon Creek No. 3 & 6 Mines UT0023060 will be inactivated.

A copy of the final signed permits are enclosed. Coverage shall begin June 1, 1989 and all requirements and conditions of the permits will be in full force and effect at that time.

Preprinted Discharge Monitoring Report forms (EPA form 3320-1) for self monitoring and reporting requirements as specified in the permits will be sent to Beaver Creek Coal by June 1st.

Also enclosed is the billing information for the issuance of your Utah Pollutant Discharge Elimination System (UPDES) permits. A fee schedule was included in the Utah Department of Health budget appropriation request at the direction of the Legislature and in accordance with Utah Code Annotated 26-1-6. The fee schedule as approved by the Legislature includes a $100.00 filing fee and a charge equal to the Bureau of Water Pollution Control's actual costs for writing and issuance of a UPDES permit. It is Division policy to charge either the filing fee or the actual cost plus 7% whichever is greater. Please remit $300.00 to the Utah Department of Health, Bureau of Water Pollution Control, P.O. Box 16690, Salt Lake City, Utah 84116-0690.

If you have any questions please contact Mike Herkimer at 538-6146.

Sincerely,

Utah Water Pollution Control Committee

Don A. Ostler

Don A. Ostler, P.E.
Executive Secretary

Enclosure

MDH:st

cc: Janet Fujita, EPA Region VIII, w/enclosure
Joel Helfrich, DOGM, w/enclosure

1571-28

BOND

Revised August 1988
RECLAMATION AGREEMENT

Permit Number ACT/007/022
Date Permit Issued Aug. 7, 1989
Effective Date of Agreement Aug. 7, 1989

STATE OF UTAH
DEPARTMENT OF NATURAL RESOURCES
DIVISION OF OIL, GAS AND MINING
355 West North Temple
3 Triad Center, Suite 350
Salt Lake City, Utah 84180-1203
(801) 538-5340

COAL RECLAMATION AGREEMENT

--oooOooo--

For the purposes of this RECLAMATION AGREEMENT the terms below are defined as follows:

"PERMIT" (Mine Permit No.)	ACT/007/022 (County) Carbon
"MINE" (Name of Mine)	C.V. Spur Processing & Loadout Facility
"OPERATOR" (Company or Name)	Beaver Creek Coal Co.
(Address)	P.O. Box 1378
	Price, Utah 84501
"OPERATOR'S REGISTERED AGENT" (Name)	C.T. Corporation System
(Address)	175 South Main St.
(Phone)	Salt Lake City, Utah 84111
"COMPANY OFFICERS":	R.D. Pick, President
	D.R. Meadors, Operations Manager
"BOND TYPE" (Form of Bond)	Surety
"BOND" (Bond Amount-Dollars)	$2,441,745
(Year-Dollars)	1994
INSTITUTION	United Pacific Insurance Company
POLICY OR ACCOUNT NUMBER	U-629894
"LIABILITY INSURANCE" (Exp.)	Life of Permit or Renewal
(Insurance Company)	Insurance Company of North America
"STATE":	Utah (Department of Natural Resources)
"DIVISION":	Division of Oil, Gas and Mining
"DIVISION DIRECTOR"	Dianne R. Nielson

EXHIBITS:

		Revision Dates		
"SURFACE DISTURBANCE"	Exhibit "A"			
"BONDING AGREEMENT"	Exhibit "B"			
"LIABILITY INSURANCE"	Exhibit "C"			
"STIPULATION TO CHANGE BOND"	Exhibit "D"			

RECLAMATION AGREEMENT

This RECLAMATION AGREEMENT (hereinafter referred to as "Agreement") is entered into by the Operator.

WHEREAS, on August 7, 19 89, the Division approved the Permit Application Package, hereinafter "PAP", submitted by Beaver Creek Coal Co., hereinafter "Operator"; and

WHEREAS, prior to issuance of a permit to conduct mining and reclamation operations on the property described in the PAP, hereinafter "Property", the Operator is obligated by Title 40-10-1, et seq., Utah Code Annotated (1953, as amended), hereinafter "Act", to file with the Division a bond ensuring the performance of the reclamation obligations in the manner and by the standards set forth in the PAP, the Act, and the State of Utah Division of Oil, Gas and Mining Rules pertaining to Coal Mining and Reclamation Activities, hereinafter "Rules"; and

WHEREAS, the Operator is ready and willing to file the bond in the amount and in a form acceptable to the Division and to perform all obligations imposed by the Division relating to the reclamation of the Property; and

WHEREAS, the Division is ready and willing to issue the subject a mining and reclamation permit upon acceptance and approval of the bond.

NOW, THEREFORE, the Division and the Operator agree as follows:

1. The provisions of the Act and the Rules are incorporated by reference herein and hereby made a part of this Agreement. Provisions of the Act or Rules shall supercede conflicting provisions of this Agreement.

2. The Operator shall provide a legal description of the property including the number of acres approved by the Division to be disturbed by surface mining and reclamation operations during the permit period. The description is attached as Exhibit "A", and is incorporated by reference and shall be referred to as the "Surface Disturbance".

3. The Operator shall provide a bond to the Division in the form and amount acceptable to the Division ensuring the performance of the reclamation obligations in the manner and by the standards set forth in the PAP, the Act and the Rules. Said bond is attached as Exhibit "B" and is incorporated by reference.

4. The Operator shall maintain in full force and effect the public liability insurance policy submitted as part of the permit application. The Division shall be listed as an additional insured on said policy.

5. In the event that the Surface Disturbance is increased through expansion of the coal mining and reclamation operations or decreased through partial reclamation, the Division shall adjust the bond as appropriate.

6. The Operator does hereby jointly and severally agree to indemnify and hold harmless the State of Utah and the Division from any claim, demand, liability, cost, charge, or suit initiated by a third party as a result of the Operator or Operator's agent or employees failure to abide by the terms and conditions of the approved PAP and this Agreement.

7. The terms and conditions of this Agreement are non-cancellable until such time as the Operator has satisfactorily, as determined by the Division, reclaimed the Surface Disturbance in accordance with the approved PAP, the Act, and the Rules. Notwithstanding the above, the Division may direct, or the Operator may request and the Division may approve, a modification to this Agreement.

8. The Operator may, at any time, submit a request to the Division to substitute the bonding method. The Division may approve the substitution if the bond meets the requirements of the Act and the Rules, but no bond shall be released until the Division has approved and accepted the replacement bond.

9. Any revision in the Surface Disturbance, the bond amount, the bond type, the liability insurance amount coverage, and/or the liability insurance company, or other revisions affecting the terms and conditions of this Agreement shall be submitted on the form entitled "Stipulation to Revise Reclamation Agreement" and shall be attached hereto as Exhibit "D".

10. This Agreement shall be governed and construed in accordance with the laws of the State. The Operator shall be liable for all costs required to comply with this agreement, including any attorney fees.

11. Any breach of the provisions of this Agreement, the Act, the Rules, or the PAP may, at the discretion of the Division, result in an order to cease coal mining and reclamation operations, revocation of the Operator's permit to conduct coal mining and reclamation operations and/or forfeiture of the bond.

RECLAMATION AGREEMENT

12. In the event of forfeiture, the Operator shall be liable for additional costs in excess of the bond amount which are required to comply with this Agreement. Any excess monies resulting from the forfeiture of the bond amount upon compliance with this contract shall be refunded to the appropriate party.

13. Each signatory below represents that he/she is authorized to execute this Agreement on behalf of the named party. Proof of such authorization is provided on a form acceptable to the Division and is attached hereto.

SO AGREED this _____ day of _____, 19 ___

STATE OF UTAH:

_____
Dianne R. Nielson, Director
Division of Oil, Gas and Mining

OPERATOR:

_____
Company Officer - Position
Richard D. Pick - President

_____
Company Officer - Position
D.R. Meadors, Operations Manager

NOTE: An Affidavit of Qualification must be completed and attached to this form for each authorized agent or officer. Where one signs by virtue of Power of Attorney for a company, such Power of Attorney must be filed with this Agreement. If the principal is a corporation, the Agreement shall be executed by its duly authorized officer.

EXHIBIT "A"

SURFACE DISTURBANCE

LEGAL DESCRIPTION

Permit Number ACT/007/022
Effective Date Aug. 7, 1989

SURFACE DISTURBANCE
--ooOOoo--

In accordance with the RECLAMATION AGREEMENT, the OPERATOR intends to conduct coal mining and reclamation activities on or within the surface DISTURBANCE as described hereunder:

Total acres of SURFACE DISTURBANCE 160 acres (more or less)

Legal Description of SURFACE DISTURBANCE:

W½SW¼ (except 0.24 ac. in NW corner), and E½SW¼ (except East 100'), Section 11, T15S, R10E, S.L.B.&M.

E X H I B I T "B"

S U R E T Y B O N D
(NON-FEDERAL COAL)

August 1988
Exhibit "B" - BONDING AGREEMENT
SURETY BOND

Permit Number ACT/007/022
Expiration Date Aug. 7, 1994

(NON-FEDERAL COAL)
SURETY BOND
--ooOOoo--

THIS SURETY BOND entered into and by and between the undersigned OPERATOR, and SURETY COMPANY, hereby jointly and severally bind ourselves, our heirs, administrators, executors, successors and assigns unto the State of Utah, Division of Oil, Gas and Mining in the penal sum of ($ 2,441,745.00) (Surety Bond Amount) for the timely performance of reclamation responsibilities of the surface disturbance described in Exhibit "A" of this Reclamation Agreement.

This SURETY BOND shall remain in effect until all applicable rules and the OPERATOR's reclamation obligation have been met and released by the Division of Oil, Gas and Mining.

Terms for release or adjustment of this BOND are as written and agreed to by the DIVISION and the OPERATOR in the RECLAMATION AGREEMENT incorporated by reference herein, to which this SURETY AGREEMENT has been attached as Exhibit "B".

August 1988

AFFIDAVIT OF QUALIFICATION
OPERATOR
--ooOOoo--

I, Richard D. Pick, being first duly sworn under oath, deposes and says that he/she is the (officer or agent) _____ of Beaver Creek Coal Co. ; and that he/she is duly authorized to execute and deliver the foregoing obligations; and that said OPERATOR is authorized to execute the same and has complied in all respects with the laws of Utah in reference to commitments, undertakings and obligations herein.

(Signed) Richard D. Pick
Name - Position

Subscribed and sworn to before me this 11th day of September, 1989.

Rosina Sisgoria
Notary Public

My Commission Expires:

4/1/, 1993.

Attest:

STATE OF Utah)
) ss:
COUNTY OF Carbon)

STATE #ACT/007/022

ORIGINAL

R I D E R

RIDER to be attached to and form a part of Bond Number U-629894

on behalf of BEAVER CREEK COAL COMPANY
(Name)

P.O. BOX AU, PRICE, UTAH 84501
(Address)

as Principal, and in favor of STATE OF UTAH, DIVISION OF OIL, GAS AND MINING

as Obligee, executed by UNITED PACIFIC INSURANCE COMPANY as Surety,

in the amount of TWO MILLION FOUR HUNDRED FORTY-ONE THOUSAND SEVEN HUNDRED FORTY-FIVE AND NO/100----------

Dollars ($ 2,441,745.00) effective AUGUST 6, 19 89.

It is hereby understood and agreed that effective as of SEPTEMBER 5, 1991, the said bond has been amended as follows:

1) **The Principal's Name has been changed from: BEAVER CREEK COAL COMPANY**
to: MOUNTAIN COAL COMPANY

2) **Specific Language has been added:**
"In the event the Cooperative Agreement between the DIVISION and OSM is terminated, then the portion of the bond covering the Federal Lands will be payable only to the United States, Department of Interior, Office of Surface Mining."

Nothing herein contained shall vary, alter or extend any provisions or conditions of the bond other than as above stated.

SIGNED, SEALED AND DATED this 5TH day of SEPTEMBER, 19 91.

MOUNTAIN COAL COMPANY
Principal

BY: Thomas H. Tarber
Vice President

UNITED PACIFIC INSURANCE COMPANY
Surety

BY: Dorothy M. Iwanoff
DOROTHY M. IWANOFF
ATTORNEY-IN-FACT

R I D E R

RIDER to be attached to and form a part of Bond Number U-629894

on behalf of BEAVER CREEK COAL COMPANY
(Name)

P.O. Box AU, Price, Utah 84501
(Address)

as Principal, and in favor of STATE OF UTAH

as Obligee, executed by UNITED PACIFIC INSURANCE COMPANY as Surety,

in the amount of TWO MILLION SEVENTEEN THOUSAND SIX HUNDRED SIXTY-NINE---------

Dollars ($ 2,017,669.00) effective APRIL 22, 19 87.

It is hereby understood and agreed that, effective as of AUGUST 6, 1989, the Bond Amount on said bond has been increased as follows:

FROM: TWO MILLION SEVENTEEN THOUSAND SIX HUNDRED SIXTY-NINE AND NO/100 DOLLARS ($2,017,669.00)

TO: TWO MILLION FOUR HUNDRED FORTY-ONE THOUSAND SEVEN HUNDRED FORTY-FIVE DOLLARS ($2,441,745.00)

Nothing herein contained shall vary, alter or extend any provisions or conditions of the bond other than as above stated.

SIGNED, SEALED AND DATED this 15TH day of AUGUST, 19 89.

SAL

BEAVER CREEK COAL COMPANY
Principal

By: Richard P. Ru

UNITED PACIFIC INSURANCE COMPANY
Surety

By: W. C. DOYLE, ATTORNEY-IN-FACT

UNITED PACIFIC INSURANCE COMPANY

HEAD OFFICE, FEDERAL WAY, WASHINGTON

POWER OF ATTORNEY

KNOW ALL MEN BY THESE PRESENTS, That the UNITED PACIFIC INSURANCE COMPANY, a corporation duly organized under the laws of the State of Washington, does hereby make, constitute and appoint

W. C. DOYLE of LOS ANGELES, CALIFORNIA ----------

its true and lawful Attorney-in-Fact, to make, execute, seal and deliver for and on its behalf, and as its act and deed

ANY AND ALL BONDS AND UNDERTAKINGS OF SURETYSHIP ------

and to bind the UNITED PACIFIC INSURANCE COMPANY thereby as fully and to the same extent as if such bonds and undertakings and other writings obligatory in the nature thereof were signed by an Executive Officer of the UNITED PACIFIC INSURANCE COMPANY and sealed and attested by one other of such officers, and hereby ratifies and confirms all that its said Attorney(s)-in-Fact may do in pursuance hereof.

This Power of Attorney is granted under and by authority of Article VII of the By-Laws of UNITED PACIFIC INSURANCE COMPANY which became effective September 7, 1978, which provisions are now in full force and effect, reading as follows.

ARTICLE VII - EXECUTION OF BONDS AND UNDERTAKINGS

1. The Board of Directors, the President, the Chairman of the Board, any Senior Vice President, any Vice President or Assistant Vice President or other officer designated by the Board of Directors shall have power and authority to (a) appoint Attorneys-in-Fact and to authorize them to execute on behalf of the Company, bonds and undertakings, recognizances, contracts of indemnity and other writings obligatory in the nature thereof, and (b) to remove any such Attorney-in-Fact at any time and revoke the power and authority given to him.

2. Attorneys-in-Fact shall have power and authority, subject to the terms and limitations of the power of attorney issued to them, to execute and deliver on behalf of the Company, bonds and undertakings, recognizances, contracts of indemnity and other writings obligatory in the nature thereof. The corporate seal is not necessary for the validity of any bonds and undertakings, recognizances, contracts of indemnity and other writings obligatory in the nature thereof.

3. Attorneys-in-Fact shall have power and authority to execute affidavits required to be attached to bonds, recognizances, contracts of indemnity or other conditional or obligatory undertakings and they shall also have power and authority to certify the financial statement of the Company and to copies of the By Laws of the Company or any article or section thereof.

A power of attorney is signed and sealed by facsimile under and by authority of the following Resolution adopted by the Board of Directors of UNITED PACIFIC INSURANCE COMPANY at a meeting held on the 5th day of June, 1979, at which a quorum was present, and said Resolution has not been amended or repealed.

> "Resolved, that the signatures of such directors and officers and the seal of the Company may be affixed to any such power of attorney or any certificate relating thereto by facsimile, and any such power of attorney or certificate bearing such facsimile signatures or facsimile seal shall be valid and binding upon the Company and any such power so executed and certified by facsimile signatures and facsimile seal shall be valid and binding upon the Company in the future with respect to any bond or undertaking to which it is attached."

IN WITNESS WHEREOF, the UNITED PACIFIC INSURANCE COMPANY has caused these presents to be signed by its Vice President, and its corporate seal to be hereto affixed, this 23rd day of June 19 87

UNITED PACIFIC INSURANCE COMPANY

Charles B. Schmalz

Vice President

STATE OF Washington
COUNTY OF King } ss.

On this 23rd day of June, 19 87 personally appeared Charles B. Schmalz

to me known to be the Vice-President of the UNITED PACIFIC INSURANCE COMPANY, and acknowledged that he executed and attested the foregoing instrument and affixed the seal of said corporation thereto, and that Article VII, Section 1, 2, and 3 of the By-Laws of said Company, and the Resolution, set forth therein, are still in full force.

My Commission Expires:

May 15, 19 90

Pamela Young

Notary Public in and for State of Washington

Residing at Tacoma

Lawrence W. Carlstrom, Assistant Secretary of the UNITED PACIFIC INSURANCE COMPANY, do hereby certify that the foregoing is a true and correct copy of a Power of Attorney executed by said UNITED PACIFIC INSURANCE COMPANY, which is still in full force and effect.

IN WITNESS WHEREOF, I have hereunto set my hand and affixed the seal of said Company this 15TH day of AUGUST 19 89

BOU-1431 Ed. 4/80

Assistant Secretary

Lawrence W. Carlstrom

CALIFORNIA
ACKNOWLEDGEMENT BY SURETY

'E OF CALIFORNIA

NTY OF LOS ANGELES } ss.

ıis 15TH day of AUGUST in the year 19 89, before me CORA V. RODRIGUEZ personally

ıred W. C. DOYLE,

nally known to me (or proved to me on the basis of satisfactory evidence) to be the person who executed the within

ıment as attorney-in-fact of UNITED PACIFIC INSURANCE COMPANY

ıcknowledged to me that the corporation executed it.

OFFICIAL SEAL
CORA V. RODRIGUEZ
NOTARY PUBLIC - CALIFORNIA
PRINCIPAL OFFICE IN
LOS ANGELES COUNTY
My Commission Expires March 24, 1993

Cora V. Rodriguez
Notary Public

ARCO Coal Company
555 Seventeenth Street
Denver, Colorado 80202
Telephone 303 293 4000

August 17, 1987

Pamela Grubaugh-Littig
State of Utah
Natural Resources
Oil, Gas & Mining
355 W. North Temple
3 Triad Center, Suite 350
Salt Lake City, Utah 84180-1203

Re: Bond No. U-629894

Dear Ms. Littig:

As we discussed by telephone, enclosed is a rider increasing the bond on CV Spur to $2,017,669.00.

Please contact me if you need anything further in this regard.

Sincerely,

Mickey L. Love

Mickey L. Love
Senior Lease Adminsitrator

MLL:mjb
enclosure
cc: Dan Guy

UNITED PACIFIC INSURANCE COMPANY

HOME OFFICE, FEDERAL WAY, WASHINGTON

POWER OF ATTORNEY

"NOW ALL MEN BY THESE PRESENTS, That the UNITED PACIFIC INSURANCE COMPANY, a corporation duly organized under the laws of the ate of Washington, does hereby make, constitute and appoint

W. C. DOYLE of LOS ANGELES, CALIFORNIA-------

its true and lawful Attorney-in-Fact, to make, execute, seal and deliver for and on its behalf, and as its act and deed

ANY AND ALL BONDS AND UNDERTAKINGS OF SURETYSHIP----

and to bind the UNITED PACIFIC INSURANCE COMPANY thereby as fully and to the same extent as if such bonds and undertakings and other writings obligatory in the nature thereof were signed by an Executive Officer of the UNITED PACIFIC INSURANCE COMPANY and sealed and attested by one other of such officers, and hereby ratifies and confirms all that its said Attorney(s)-in-Fact may do in pursuance hereof.

This Power of Attorney is granted under and by authority of Article VII of the By-Laws of UNITED PACIFIC INSURANCE COMPANY which became effective September 7, 1978, which provisions are now in full force and effect, reading as follows:

ARTICLE VII – EXECUTION OF BONDS AND UNDERTAKINGS

1. The Board of Directors, the President, the Chairman of the Board, any Senior Vice President, any Vice President or Assistant Vice President or other officer designated by the Board of Directors shall have power and authority to (a) appoint Attorneys-in-Fact and to authorize them to execute on behalf of the Company, bonds and undertakings, recognizances, contracts of indemnity and other writings obligatory in the nature thereof, and (b) to remove any such Attorney-in-Fact at any time and revoke the power and authority given to him.

2. Attorneys-in-Fact shall have power and authority, subject to the terms and limitations of the power of attorney issued to them, to execute and deliver on behalf of the Company, bonds and undertakings, recognizances, contracts of indemnity and other writings obligatory in the nature thereof. The corporate seal is not necessary for the validity of any bonds and undertakings, recognizances, contracts of indemnity and other writings obligatory in the nature thereof.

3. Attorneys-in-Fact shall have power and authority to execute affidavits required to be attached to bonds, recognizances, contracts of indemnity or other conditional or obligatory undertakings and they shall also have power and authority to certify the financial statement of the Company and to copies of the By-Laws of the Company or any article or section thereof.

This power of attorney is signed and sealed by facsimile under and by authority of the following Resolution adopted by the Board of Directors of UNITED PACIFIC INSURANCE COMPANY at a meeting held on the 5th day of June, 1979, at which a quorum was present, and said Resolution has not been amended or repealed:

> "Resolved, that the signatures of such directors and officers and the seal of the Company may be affixed to any such power of attorney or any certificate relating thereto by facsimile, and any such power of attorney or certificate bearing such facsimile signatures or facsimile seal shall be valid and binding upon the Company and any such power so executed and certified by facsimile signatures and facsimile seal shall be valid and binding upon the Company in the future with respect to any bond or undertaking to which it is attached."

IN WITNESS WHEREOF, the UNITED PACIFIC INSURANCE COMPANY has caused these presents to be signed by its Vice President, and its corporate seal to be hereto affixed, this 1st day of March 19 82.

UNITED PACIFIC INSURANCE COMPANY

Charles B. Schmalz

Vice President

STATE OF Washington
COUNTY OF King } ss.

On this 1st day of March, 19 82, personally appeared Charles B. Schmalz

to me known to be the Vice-President of the UNITED PACIFIC INSURANCE COMPANY, and acknowledged that he executed and attested the foregoing instrument and affixed the seal of said corporation thereto, and that Article VII, Section 1, 2, and 3 of the By-Laws of said Company, and the Resolution, set forth therein, are still in full force.

My Commission Expires:

June 12 , 1982

Nancy Stannes

Notary Public in and for State of Washington

Residing at Tacoma

Charles J. Falskow , Assistant Secretary of the UNITED PACIFIC INSURANCE COMPANY, do hereby certify that the above and foregoing is a true and correct copy of a Power of Attorney executed by said UNITED PACIFIC INSURANCE COMPANY, which is still in full force and effect.

IN WITNESS WHEREOF, I have hereunto set my hand and affixed the seal of said Company this 4TH day of AUGUST 19 87

Assistant Secretary Charles J. Falskow

BDU-1431 Ed. 4/80

LIABILITY INSURANCE

CERTIFICATE OF INSURANCE

(This Certificate of Insurance neither affirmatively nor negatively amends, extends or alters the coverage, limits, terms or conditions of the policies it certificates.)

CIGNA

This is to Certify to

State of Utah
Dept. of Natural Resources
Division of Oil, Gas and Mining
355 West North Temple
3 Triad Center, Suite 350
Salt Lake City, Utah 84180-1203

COMPANY CODES

- [2] CIGNA INSURANCE COMPANY
- [3] CIGNA INS. CO. OF TEXAS
- [5] PACIFIC EMPLOYERS INS. CO.
- [9] INSURANCE COMPANY OF NORTH AMERICA
- [A] CIGNA INS. CO. OF ILLINOIS
- [B] CIGNA INS. CO. OF OHIO
- [ ] (OTHER; — SPECIFY)

FOLD

that the following described policy or policies, issued by The Company as coded below, providing insurance only for hazards checked by "X" below, have been issued to:

NAME AND ADDRESS OF INSURED: Atlantic Richfield Company, its Subsidiaries and subsidiaries thereof as now or hereinafter constituted, Atlantic Richfield Plaza, 515 South Flower Street, Los Angeles, California 90071

covering in accordance with the terms thereof, at the following location(s):

Including Mountain Coal Company and ARCO Coal Company

TYPE OF POLICY	HAZARDS	CO. CODE	POLICY NUMBER	POLICY PERIOD	LIMITS OF LIABILITY
(a) Standard Workmen's Compensation & Employers' Liability	[ ]	[ ]			$ Statutory W. C. One Accident and Aggregate Disease
(b) General Liability — Bodily Injury: Premises—Operations (including "Incidental Contracts" as defined below)	[X]	[9]	ISL G1 077856-6	01-01-90 to 01-01-93	$ *See Below Each Person; Each [ ] Accident [ ] Occurrence
Independent Contractors	[X]	[9]			$
Completed Operations/Products	[X]	[9]			
Contractual, (Specific type as described in footnote below)	[X]	[9]			$ Aggregate—Completed Operations/Products
Property Dam: Premises—Operations (Including "Incidental Contracts" as defined below)	[X]	[9]	ISL G1 077856-6	01-01-90 to 01-01-93	$ *See Below Each [ ] Accident [ ] Occurrence
Independent Contractors	[X]	[9]			$ Aggregate—Prem./Oper
Completed Operations/Products	[X]	[9]			$ Aggregate—Protective; $ Aggregate—Completed Operations/Products
Contractual, (Specific type as described in footnote below)	[X]	[9]			$ Aggregate—Contractual
(c) Automobile Liability — Bodily Injury: Owned Automobiles	[ ]	[ ]			$ Each Person
Hired Automobiles	[ ]	[ ]			
Non-owned Automobiles	[ ]	[ ]			$ Each [ ] Accident [ ] Occurrence
Property Damage: Owned Automobiles	[ ]	[ ]			Each [ ] Accident [ ] Occurrence
Hired Automobiles	[ ]	[ ]			$
Non-owned Automobiles	[ ]	[ ]			
(d) **INCLUDES "XCU" COVERAGE					*$500,000 Combined Single Limit Each Occurrence Aggregate Where Applicable

Contractual Footnote: Subject to all the policy terms applicable, specific contractual coverage is provided as respects

(Check Applicable Block) [ ] a contract [ ] purchase order agreements [ ] all contracts between the Insured and:

[redacted] in the event of cancellation of the policy or policies by the company [redacted] (45) Forty Fiv days written notice of such cancellation will be given to you at the address stated above

NAME OF OTHER PARTY | DATE (if applicable) | CONTRACT NO. (if any)

DESCRIPTION (OR JOB) C.V. Spur Mine ACT/007/022

Definitions: "Incidental contract" means any written (1) lease of premises (2) easement agreement, except in connection with construction or demolition operations on or adjacent to a railroad, (3) undertaking to indemnify a municipality requir[illegible] municipal ordinance, except in connection with work for the municipality, (4) sidetrack agreement, or (5) elevator maintenance agreement.

Authorized Representative

LC-1389e Ptd in U.S.A.

2. INSURED'S COPY

DIVISION ORDERS

Norman H. Bangerter
Governor
Dee C. Hansen
Executive Director
Dianne R. Nielson, Ph.D.
Division Director

State of Utah

DEPARTMENT OF NATURAL RESOURCES
DIVISION OF OIL, GAS AND MINING

355 West North Temple
3 Triad Center, Suite 350
Salt Lake City, Utah 84180-1203
801-538-5340

December 10, 1991

Mr. Dan Guy, Manager
Mountain Coal Company
P.O. Box 1378
Price, Utah 84501

Dear Mr. Guy:

Re: Approval of Emergency Spillway Plans, C. V. Spur Coal Processing and Loadout Facility, Mountain Coal Company, ACT/007/022-DO-91A, Folder #3, Carbon County, Utah

The emergency spillway designs, with information submitted through December 9, 1991 are hereby approved. Three hard copies of the appropriate pages of calculation, the pond as-builts and spillway design plates must be submitted for inclusion in the plan for the C. V. Spur Coal Processing and Loadout Facility.

Sincerely,

Pamela Grubaugh-Littig
Permit Supervisor

PGL/jbe
cc: Ken Wyatt
Bill Malencik

an equal opportunity employer

Mountain Coal Company
Trail Mountain Mine
Post Office Box 1378
Price, Utah 84501
Telephone 801 637-5050 (Price Office)
801 637-5203 (Mine Office)
801 748-2140 (Mine Site)

November 14, 1991

Pamela Grubaugh-Littig
Permit Supervisor
Utah Division of Oil, Gas and Mining
355 West North Temple
3 Triad Center, Suite 350
Salt Lake City, Utah 84180-1203

Re: Division Order DO-91A
C.V. Spur Loadout Facility
ACT/007/002: Folder #3
Carbon County, Utah

Dear Ms. Littig:

Enclosed are 3 copies of required information for the above referenced Division Order. All pages and Plates are numbered and should replace corresponding numbers in the M.R.P. or be added as indicated.

Please note, there are 2 separate submittals: (1) Certified, As Constructed maps of the existing ponds to be placed in the plan, and (2) Proposed plans to modify the spillways on Ponds 5 and 6 as required by the Order.

We are prepared to proceed with the spillway modifications upon your approval.

If you have any questions, or need any further information, please let me know.

Respectfully,

Dan W. Guy

Dan W. Guy
Mgr. Permitting/Compliance

cc: Rick Parkins
Johnny Coffey
Dave Arnolds
File

C.V. SPUR PONDS

SPILLWAY CALCULATIONS

PARAMETER	POND NO. 5	POND NO. 6
Q = Flow (cfs)	9.71	19.93
b = Bot. Width (ft.)	4.00	6.00
H = Depth of Flow (ft.)	0.85	1.05

Based on Broad-Crested Weir Formula $Q = 3.087\ b\ H^{1.5}$

12/09/91

Norman H. Bangerter
Governor
Dee C. Hansen
Executive Director
Dianne R. Nielson, Ph.D.
Division Director

State of Utah

DEPARTMENT OF NATURAL RESOURCES
DIVISION OF OIL, GAS AND MINING

355 West North Temple
3 Triad Center, Suite 350
Salt Lake City, Utah 84180-1203
801-538-5340

September 9, 1991

CERTIFIED RETURN RECEIPT
P 074 979 124

Mr. Dan Guy, Manager
Beaver Creek Coal Company
P.O. Box 1378
Price, Utah 84501

Dan
Dear Mr. Guy:

Re: Division Order, Beaver Creek Coal Company (Mountain Coal Company), C.V. Spur Mine, ACT/007/022-DO-91A, Folder #3, Emery County, Utah

Enclosed please find a Division Order and Finding of Permit Deficiency for the C.V. Spur Mine. If in your review of this Order you have any questions, please call me or Pamela Grubaugh-Littig.

Sincerely,

Lowell
Lowell P. Braxton
Associate Director, Mining

jbe
Enclosure
cc: Pamela Grubaugh-Littig
Joe Helfrich
Tom Munson
Bill Malencik
Henry Sauer
AT007016.91B

STATE OF UTAH
DIVISION OF OIL, GAS AND MINING

PERMITTEE	
Dan Guy Beaver Creek Coal Company (Mountain Coal Company) C.V. Spur P.O. Box 1378 Price, Utah 84501	ORDER & FINDINGS of PERMIT DEFICIENCY
PERMIT NUMBER ACT/007/022 DIVISION ORDER # DO-91A	

PURSUANT to R614-303-212, the DIVISION ORDERS the PERMITTEE, Beaver Creek Coal Company (Mountain Coal Company), to make the permit changes enumerated in the findings of permit deficiency in order to be in compliance with the State Coal Program. These findings of permit deficiency are to be remedied in accordance with R614-303-220.

Findings of Permit Deficiency

Regulation Citation

Certification

512.100. Cross Sections and Maps. Certain cross sections and maps required to be included in a permit application will be prepared by, or under the direction of, and certified by a qualified, registered, professional engineer or land surveyor, with assistance from experts in related fields such as hydrology, geology and landscape architecture, and will be updated as required by the Division. The following cross sections and maps will be certified:

Sediment Ponds

742.223. Sedimentation ponds not meeting the size or other qualifying criteria of the MSHA, 30 CFR 77.216(a) will provide a combination of principal and emergency spillways that will safely discharge a 25-year, 6-hour precipitation event. Such ponds may use a single spillway if the spillway is:

742.223.1. An open channel of nonerodible construction and capable of maintaining sustained flows; and

742.223.2. Not earth- or grass-lined.

Permit Deficiency

Certification

All ponds require certified as-built drawings to verify they are constructed as designed.

Spillways

Pond #5 has only one culvert spillway and pond #6 has a ditch for a spillway.

Information required to be submitted

Certification

The operator must have certified as-built drawings of all impoundments.

Spillways

The operator must submit plans to rebuild pond #5 and #6 to meet the requirements of the rules. The operator will have to prove pond #6 has an open channel spillway of nonerodible construction or provide plans to meet the requirements of the rules.

Order

Beaver Creek Coal Company (Mountain Coal Company) is ordered to make the requisite permit changes in accordance with R614-303.220, and to submit a complete application for permit change to address the findings of permit deficiency within 30 days of receipt of this order. Approval by the Division must be obtained within 60 days of receipt of this order. All approvals not obtained within 60 days may result in a hindrance violation unless a request for extension has been obtained by the Director.

Ordered this 9th day of September, 1991, by the Division of Oil, Gas and Mining.

Dianne R. Nielson, Director
Division of Oil, Gas and Mining

jbe
cc: Tom Mitchell
Joe Helfrich
DIVISORD.FIN

Nov. 15, 1991
OKAYED BY Tom Munson

Norman H. Bangerter
Governor
Dee C. Hansen
Executive Director
Dianne R. Nielson, Ph.D.
Division Director

State of Utah

DEPARTMENT OF NATURAL RESOURCES
DIVISION OF OIL, GAS AND MINING

355 West North Temple
3 Triad Center, Suite 350
Salt Lake City, Utah 84180-1203
801-538-5340

January 9, 1992

Mr. Dan Guy, Manager
Mountain Coal Company
P.O. Box 1378
Price, Utah 84501

Dear Mr. Guy:

Re: Refuse Pile Drainage, C. V. Spur Coal Processing and Loadout Facility, Mountain Coal Company, ACT/007/022-DO-91B, Folder #3, Carbon County, Utah

The above-noted Division Order is hereby approved.

Sincerely,

Pamela Grubaugh-Littig
Permit Supervisor

an equal opportunity employer

Mountain Coal Company
Trail Mountain Mine
Post Office Box 1378
Price, Utah 84501
Telephone 801 637-5050 (Price Office)
801 637-5203 (Mine Office)
801 748-2140 (Mine Site)

December 19, 1991

Pamela Grubaugh-Littig
Permit Supervisor
Utah Division of Oil, Gas and Mining
355 West North Temple
3 Triad Center, Suite 350
Salt Lake City, Utah 84180-1203

Re: Division Order DO-91B-Denial
C.V. Spur Loadout Facility
ACT/007/002: Folder #3
Carbon County, Utah

Dear Ms. Littig:

In response to the 12/10/91 Denial letter concerning the above referenced Division Order, please find enclosed 3 copies of required changes. The revised pages and Plates are numbered and should replace corresponding numbers or be added to the PAP as indicated. All changes were made as suggested by Mr. Ken Wyatt in his 12/10/91 memo to you.

If you have any questions, or need additional information, please let me know.

Respectfully,

Dan W. Guy

Dan W. Guy
Mgr. Permitting/Compliance

cc: Rick Parkins
Johnny Coffey
Dave Arnolds
File

Mountain Coal Company
Trail Mountain Mine
Post Office Box 1378
Price, Utah 84501
Telephone 801 637-5050 (Price Office)
801 637-5203 (Mine Office)
801 748-2140 (Mine Site)

November 14, 1991

Pamela Grubaugh-Littig
Permit Supervisor
Utah Division of Oil, Gas and Mining
355 West North Temple
3 Triad Center, Suite 350
Salt Lake City, Utah 84180-1203

Re: Division Order DO-91B
C.V. Spur Loadout Facility
ACT/007/002: Folder #3
Carbon County, Utah

Dear Ms. Littig:

In response to the above referenced Division Order, please find enclosed 3 copies of required changes. The revised pages and Plates are numbered and should replace corresponding numbers or be added to the PAP as indicated.

If you have any questions, or need additional information, please let me know.

Respectfully,

Dan W. Guy

Dan W. Guy
Mgr. Permitting/Compliance

cc: Rick Parkins
Johnny Coffey
Dave Arnolds
File

7.2.3.6 Refuse Pile Drainage

The refuse pile was surveyed in November 1991, and a new, "As-Constructed" map has been included as Plate 3-3B. In response to a Division Order, the drainage from the refuse pile has been upgraded to accommodate a 100 year-6 hr. event (1.91 inches).

As a result of the revised storm design requirements, 2 ditches and one culvert have been re-designed. Collection ditch CD-13 is on the north end of the pile parallel to the road, and drains the north and west slopes of the pile. Collection ditch CD-7 is along the south and east side of the pile, between the pile and the railroad. This is generally a broad, well vegetated area, and drains the south and east slopes of the pile. A concrete catch basin and temporary 10" flexible culvert are placed at the northeast corner of the pile to collect the drainage from the top area. Drainage from the top of the pile is controlled by berms, which prevent drainage down the slope, and direct it to the extreme northeast corner. The 10" flexible culvert will be replaced with a 24" culvert (C-22) based on the new calculations. This culvert is shown on page 7-88a "Culvert Design Specifications."

7.2.3.6 Refuse Pile Drainage (continued)

The following pages will summarize the methodology used in the ditch and culvert design. All refuse ditches and culverts are shown on new Plate 3-3B and have been added to Plate 3-2.

A typical cross section of the refuse pile drainage channels is shown on Figure 7-8. Design details are summarized for each of the channels in Table 7-29. The channel design is based on the following criteria:

(1) 100 year-6 hour precipitation event-1.91 inches.

(2) OSM Hydrology Program, using SCS-TR55 method for Type II storms.

(3) Drainage areas taken from Plate 3-3B.

(4) Slopes taken from Plate 3-3B.

(5) Runoff curve number of 87 used as an average for the refuse area on Table 7-16 (p.7-67) "Refuse Area".

(6) Manning's n of 0.035 used for roughness coefficient.

(7) Critical velocity for erosion - 5 fps.

(8) Runoff based on rainfall-runoff equation

$$Q = \frac{(P-0.2S)^2}{P+0.8S} = 0.83; \text{ where}$$

$$S = \frac{1000}{CN} - 10; \; CN = 87; \; P = 1.91 \text{ in.}$$

TABLE 7-29

REFUSE PILE DRAINAGE

Design Details

Structure	CD-13	CD-7	C-22
Drainage Area (ac)	4.16	7.18	16.45
Precip: 100 yr-6 hour (in.)	1.91	1.91	1.91
Peak Discharge - Q100 (cfs)	5.20	8.98	13.88
Slope (%)	4.00	3.00	2.00
Bottom Width (ft.)	0.00	2.00	24" cmp
Side Slope (h:v)	1:1	1:1	N/A
Manning's n	0.035	0.035	0.024
Velocity (fps)	4.46	4.57	11.49
Runoff Curve No.	87	87	87
Rip-rap Req'd. (Y/N)	*N	*N	*N
Flow Depth (ft.)	1.08	0.72	2.10
Time of Conc. (hrs.)	0.02	0.02	0.30

* Channels will be constructed within Mancos Shale or compacted refuse where erosive velocities are estimated at 6 fps or greater ("Applied Hydrology and Sedimentology for Disturbed Areas," Table 3.2, p. 162, Barfield, Warner & Haan, 1983). If erosion becomes evident, channels will be rip-rapped as necessary.

FIGURE 7-8
REFUSE PILE DRAINAGE CHANNELS

Typical Cross-Section
CD-7 & CD-13

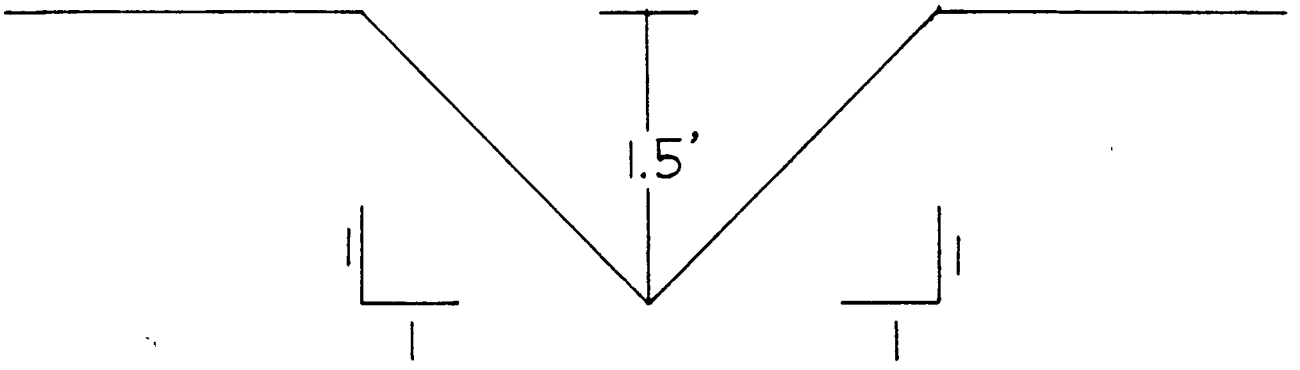

Note:
Ditch configuration may vary; however, ditches will be maintained with a minimum cross-sectional area of 2.25 ft^2.

* Dimensions for construction purposes only.

Channel Flow Calculation

For: REFUSE DITCH CD-7

Bed Slope =	.02	
Manning's N =	.035	
Bottom Width =	0	feet
Channel Side Slope =	1	
Flow Depth =	1.295071	feet
Cross Sectional Area =	1.946221	square feet
Wetted Perimeter =	3.945687	feet
Hydraulic Radius =	.4932321	feet
Discharge =	8.979999	cubic feet/sec
Velocity =	4.614025	feet/sec

REGISTERED PROFESSIONAL ENGINEER
No. 4548
DAN. W. GUY
11/15/91
STATE OF UTAH

Channel Flow Calculation

For: REFUSE DITCH CD-13

Bed Slope =	.04	
Manning's N =	.035	
Bottom Width =	0	feet
Channel Side Slope =	1	
Flow Depth =	1.079602	feet
Cross Sectional Area =	1.165609	square feet
Wetted Perimeter =	3.053661	feet
Hydraulic Radius =	.3817076	feet
Discharge =	5.2	cubic feet/sec
Velocity =	4.461201	feet/sec

REGISTERED PROFESSIONAL ENGINEER
No. 4548
GUY
11/15/91
STATE OF UTAH

TABLE IV-5

ESTIMATED RETURN PERIODS FOR SHORT DURATION PRECIPITATION
(inches)

Station: Price
Latitude: 39° 37'

Elevation: 5680
Longitude: 110° 50'

DURATION

RETURN PERIOD (years)	5 Min	10 Min	15 Min	30 Min	1 Hr	2 Hr	3 Hr	6 Hr	12 Hr	24 Hr
1	.08	.13	.17	.23	.29	.37	.44	.62	.78	.95
2	.12	.18	.23	.32	.40	.49	.58	.80	1.00	1.20
5	.16	.25	.32	.44	.56	.68	.79	1.07	1.32	1.58
10	.20	.31	.39	.54	.68	.81	.94	1.25	1.53	1.82
25	.24	.37	.47	.65	.82	.98	1.13	1.50	1.83	2.18
50	.28	.43	.54	.75	.95	1.12	1.29	1.71	2.08	2.47
100	.31	.49	.62	.85	1.08	1.27	1.45	1.91	2.32	2.74

Table IV-6 shows the average monthly precipitation for the period 1936-1976.

The climatology summary by month for period 1936-1965 is given in Table IV-7.

7.2.4 Effects of Mining on Surface Water

Protection of the hydrologic balance at C.V. Spur is accomplished by control of runoff from disturbed areas, diversion of runoff from undisturbed ares, and deversion, collection, and recirculation of water supply and storm water. There are no subsurface operations at C.V. Spur.

In general, most of the disturbed area runoff, poor quality groundwater, and all plant overflow water is cleaned and recirculated with no discharge from the property. The natural (undisturbed) drainage is allowed to flow into natural channels, bypassing the disturbed areas. Excess french drain water may be released to the Price River. Storm water runoff from disturbed areas may also be released to the Price River once effluent limits have been met. Surface runoff from the site and adjacent area and french drain water are expected to be of higher quality than natural baseline

Table 7-25

CULVERT DESIGN SPECIFICATIONS

Culvert Number	Design Discharge cfs		Diameter ft	Length ft	Normal Depth	Velocity ft/sec
C-1	0.81		1.0	30	0.45	2.38
C-2	0.98		1.5	35	0.35	2.80
C-3	3.70	(2)	1.5	30	0.59	2.90
C-4	0.36		2.0	60	0.26	1.81
C-5	9.68		2.0	70	1.35	3.59
C-6	0.80		1.5	30	0.38	2.2
C-7	10.56		2.0	30	1.43	4.4
C-8	0.77		1.5	60	0.38	2.2
C-9	1.44		1.5	50	0.51	2.7
C-10	11.97		2.0	70	1.6	4.44
C-11	0.56		1.0	40	0.37	2.12
C-12	5.11		1.5	40	1.11	3.64
C-13A	5.11		1.5	50	1.11	3.64
C-13	5.11		1.5	30	1.11	3.64
C-14**	---		---	--	----	----
C-15	20.5		2.0	20	2.87*	7.60***
C-16	1.34		2.0	30	0.45	2.10
C-17	0.36		2.0	40	0.26	1.81
C-18	0.80		1.0	40	0.46	2.20
C-19	0.22		1.0	20	0.28	1.19
C-20	0.22		1.0	20	0.28	1.19
C-21	1.11		2.0	60	0.34	2.05
C-22	13.88		2.0	100	2.10****	11.49
C-23	0.15		1.0	30	0.20	1.50

* Head water Depth = 3.50ft.
** Removed 12/18/91 - Replaced with open spillway
*** Erosion to be minimized by the use of 9" med. diam. rip-rap at the culvert outlet.
**** Head Water Depth = 3.50ft.

Norman H. Bangerter
Governor
Dee C. Hansen
Executive Director
Dianne R. Nielson, Ph.D.
Division Director

State of Utah

DEPARTMENT OF NATURAL RESOURCES
DIVISION OF OIL, GAS AND MINING

355 West North Temple
3 Triad Center, Suite 350
Salt Lake City, Utah 84180-1203
801-538-5340

December 10, 1991

Mr. Dan Guy, Manager
Mountain Coal Company
P.O. Box 1378
Price, Utah 84501

Dear Mr. Guy:

Re: Denial of Response to Division Order for Refuse Pile Drainage Plans, Mountain Coal Company, C. V. Spur Coal Processing and Loadout Facility, ACT/007/022-DO-91B, Folder #3, Carbon County, Utah

Mountain Coal Company's submittal of November 15, 1991 has been reviewed and found inadequate. The attached memo outlines all of the deficiencies. Please resubmit all of the required information to make the drainage plans complete and technically adequate by December 20, 1991.

Sincerely,

Pamela Grubaugh-Littig
Permit Supervisor

PGL/jbe
Enclosure
cc: Ken Wyatt

an equal opportunity employer

Norman H. Bangerter
Governor
Dee C. Hansen
Executive Director
Dianne R. Nielson, Ph.D.
Division Director

State of Utah

DEPARTMENT OF NATURAL RESOURCES
DIVISION OF OIL, GAS AND MINING

355 West North Temple
3 Triad Center, Suite 350
Salt Lake City, Utah 84180-1203
801-538-5340

December 10, 1991

TO: Pamela Grubaugh-Littig, Permit Supervisor

FROM: Ken Wyatt, Reclamation Hydrologist KW

RE: Response to Division Order #DO-91B, Refuse Pile Drainage Plans, Mountain Coal Company, C.V. Spur Mine, ACT\007\022, Folder #3, Carbon County, Utah

SYNOPSIS

On November 15, 1991, the Division received a response to Division Order DO-91B from Mountain Coal Company (MCC). The Division Order requested the following information be submitted:

Diversion Design

746.212 Submit in PAP format:

1) Calculations for all refuse pile diversions.
2) Revised Plate 3-2 showing each diversion and protective berm relating to the active refuse pile.

Maps and Cross Sections

512.120
512.230 Submit in PAP format:

1) Revised plates 3-2 and 3-2 and depict the current refuse pile area and base.
2) Revise and certify plate 3-3 showing current cross section refuse pile stations A to A'.

The following is a review of the information submitted.

ANALYSIS

Three plates and numerous PAP pages were submitted as MCC's response. Plate 3-2 was revised to show all refuse pile diversions and culverts. The calculations were derived from a combination of pages recently submitted and ones already available in the PAP.

The unnamed diversion west of diversion CD-9 was named CD-8A. Review of the literature submitted does include the calculations for the active refuse pile diversions.

PLATE 3-2

The label for Collection Ditch CD-13 is misplaced. The label should be placed on the ditch and not the berm on top of the refuse pile.

PLATE 3-3

Plate 3-3 is missing a North indicator arrow.

PLATE 3-3B

No cross section design for the berm on top of the refuse pile was submitted. A typical berm cross section should be supplied on plate 3-3B.

PLATE 7-5

The Collection Ditch table on Plate 7-5 needs the addition of Collection Ditch CD-13.

PAP TEXT

The text submitted in this response contains several errors.

Page 7-87d: The text references figure 7-7. Shouldn't this be Figure 7-8? Also, the design storm event listed in part 1 should read 100 year-6 hour precipitation event; not 100 year-26 hour precipitation event.

Page 7-87e: Table 7-29 enumerates design details for the refuse pile drainage. The culvert off of the refuse pile is listed as C-2. Shouldn't this be C-22?

Page 7-88a: Table 25 gives Culvert Designs for the entire area. According to Plate 3-2, Surface Facilities and Operations, culvert C-13A is located just south of area 1c where CD-6 crosses the access road. It is shown on the Plate 3-2 but not included on the design table. Plate 3-2 shows an unnamed culvert southwest of the soil stockpiles where ditch CD-1 crosses the access road to the soil stockpiles. These two culverts need to be incorporated into table 7-25.

RECOMMENDATION

I recommend that this submittal not be approved until the above noted problems are corrected and resubmitted.

kw
A:\CVSPUR

Mountain Coal Company
Trail Mountain Mine
Post Office Box 1378
Price, Utah 84501
Telephone 801 637-5050 (Price Office)
801 637-5203 (Mine Office)
801 748-2140 (Mine Site)

November 14, 1991

Pamela Grubaugh-Littig
Permit Supervisor
Utah Division of Oil, Gas and Mining
355 West North Temple
3 Triad Center, Suite 350
Salt Lake City, Utah 84180-1203

Re: Division Order DO-91B
C.V. Spur Loadout Facility
ACT/007/002: Folder #3
Carbon County, Utah

Dear Ms. Littig:

In response to the above referenced Division Order, please find enclosed 3 copies of required changes. The revised pages and Plates are numbered and should replace corresponding numbers or be added to the PAP as indicated.

If you have any questions, or need additional information, please let me know.

Respectfully,

Dan W. Guy

Dan W. Guy
Mgr. Permitting/Compliance

cc: Rick Parkins
Johnny Coffey
Dave Arnolds
File

Norman H. Bangerter
Governor
Dee C. Hansen
Executive Director
Dianne R. Nielson, Ph.D.
Division Director

State of Utah

DEPARTMENT OF NATURAL RESOURCES
DIVISION OF OIL, GAS AND MINING

355 West North Temple
3 Triad Center, Suite 350
Salt Lake City, Utah 84180-1203
801-538-5340

11/15

September 24, 1991

CERTIFIED RETURN RECEIPT
P 074 979 131

Mr. Dan Guy, Manager
Mountain Coal Company
P.O. Box 1378
Price, Utah 84501

Dear Mr. Guy:

Re: Division Order, Mountain Coal Company, C.V. Spur Mine, ACT/007/022-DO-91B, Folder #3, Emery County, Utah

Enclosed please find a Division Order and Finding of Permit Deficiency for the C.V. Spur Mine. If in your review of this Order you have any questions, please call me or Pamela Grubaugh-Littig.

Sincerely,

Lowell P. Braxton
Associate Director, Mining

jbe
Enclosure
cc: Pamela Grubaugh-Littig
Joe Helfrich
Tom Munson
Bill Malencik
Henry Sauer
A:\DOLTR.91B

an equal opportunity employer

STATE OF UTAH
DIVISION OF OIL, GAS AND MINING

PERMITTEE	
Dan Guy C.V. Spur Mountain Coal Company P.O. Box 1378 Price, Utah 84501	ORDER & FINDINGS of PERMIT DEFICIENCY
PERMIT NUMBER ACT/007/022 DIVISION ORDER # DO-91B	

PURSUANT to R614-303-212, the DIVISION ORDERS the PERMITTEE, Mountain Coal Company, to make the permit changes enumerated in the findings of permit deficiency in order to be in compliance with the State Coal Program. These findings of permit deficiency are to be remedied in accordance with R614-303-220.

Findings of Permit Deficiency
(Refuse Pile)

Regulation Citation

Diversion Design

746.212. Uncontrolled surface drainage may not be diverted over the outslope of the refuse pile. Runoff from areas above the refuse pile and runoff from the surface of the refuse pile will be diverted into stabilized diversion channels designed to meet the requirements of R614-301-742.300 to safely pass the runoff from a 100-year, 6-hour precipitation event.

Cross Sections and Maps

512.120. Surface facilities and operations as described under R614-301-521.124, R614-301-521.164, R614-301-521.165 and R614-301-521.167

512.230. Coal Mine Waste. The professional engineer experienced in the design of similar earth and waste structures must certify the design of the disposal facility according to R614-301-536.

Permit Deficiency

Refuse Pile Diversions

746.212 The diversion calculations do not clearly demonstrate that the refuse pile diversions have been designed to safely pass runoff from a 100-year, 6-hour precipitation event. Further, a refuse pile diversion west of CD-9 did not carry a designated number.

Maps & Cross Sections

512.120
512.230 The current configuration of the refuse pile is incorrectly shown on Plates 3-2 and 3-3.

Information required to be submitted

Diversion Design

746.212 Submit in PAP format:

1) Calculations for all refuse pile diversions.

2) Revised Plate 3-2 showing each diversion and protective berm relating to the active refuse pile.

Maps and Cross Sections

512.120
512.230 Submit in PAP format:

1) Revised plates 3-2 and 3-3 and depict the current refuse pile area and base.

2) Revise and certify plate 3-3 showing current cross section refuse pile stations A to A^1.

Order

Mountain Coal Company is ordered to make the requisite permit changes in accordance with R614-303.220, and to submit a complete application for permit change to address the findings of permit deficiency within 45 days of receipt of this order. Approval by the Division must be obtained within 75 days of receipt of this order. All approvals not obtained within 75 days may result in a hindrance violation unless a request for extension has been obtained by the Director.

Ordered this 24th day of September, 1991, by the Division of Oil, Gas and Mining.

Lauren P Brayton for

Dianne R. Nielson, Director
Division of Oil, Gas and Mining

jbe
cc: Tom Mitchell
Joe Helfrich
DIVISORD.FIN

WATER MONITORING

Water Monitoring Program
Castle Valley Spur

Station	Location	Type	Frequency	Flow Device	Results To	Remarks
CV-0-W	N.W. Corner of Property	Well	Bi-Annually	Level Rod	DOGM, OSM	
CV-1-W	Pumphouse	French Drain	Bi-Annually	Time/Volume	DOGM, OSM	
CV-3-W	South Central Property	Well	Bi-Annually	Level Rod	DOGM, OSM	
CV-4-W	NE Corner Property	Well	Bi-Annually	Level Rod	DOGM, OSM	
CV-5-W	North Central Property	Well	Bi-Annually	Level Rod	DOGM, OSM	
CV-6-W	E. Central Property	Well	Bi-Annually	Level Rod	DOGM, OSM	
CV-10-W	S.E. Adjacent Property	Well	Bi-Annually	Level Rod	DOGM, OSM	
CV-11-W	N.E. Adjacent Property	Well	Bi-Annually	Level Rod	DOGM, OSM	
CV-12-W	North Adjacent Property	Well	Bi-Annually	Level Rod	DOGM, OSM	
CV-14-W	N.E. Corner Property	Ditch	Bi-Annually	Level Rod	DOGM, OSM	
CV-15-W	Sed. Pond Discharge	Pond Outlet	Monthly	Hand-Held Time/Volume	E.P.A., DOGM Utah Health Dept.	Monitored per NPDES Permit
CV-16-W	West Property Line	Surface Ditch	Bi-Annually	Time/Volume	DOGM	Baseline thru 6/91

WATER MONITORING REPORT

Property: CV Spur
Station: CV-O-W
Location: NW Corner of Property
Type: Well
Frequency: Bi-Annually

Field Measurements	Date Sampled 5/27/91	11/25/91	Mean
Flow [gpm]	DRY	DRY	DRY
PH			
Sp. Cond. [ohms]			
Temp. [C]			
Diss. O [ppm]			
Lab. Meas. [mg/l]			
TDS			
TSS			
O & G			
Al CaCO3			
Hd CaCO3			
Ac CaCO3			
HCO3			
CO3			
Cl			
SO4			
Ca			
Mg			
K			
Na			
Cat/An			
Fe			
Mn			

WATER MONITORING REPORT

Property: CV Spur
Station: CV-1-W
Location: NE Corner of Property
Type: French Drain
Frequency: Bi-Annually

Field Measurements	Date Sampled 05/27/91	11/25/91	Mean
Flow [GPM]	DRY	9	9
PH		7.8	7.8
Sp. Cond. [ohms]		5000	5000
Temp. [C]		6	6
Diss. O [ppm]		N/A	N/A
Lab. Meas. [mg/l]			
TDS		4550	4550
TSS		1	1
O & G		N/A	N/A
Al CaCO3		380	380
Hd CaCO3		1400	1400
Ac CaCO3		0	0
HCO3		464	464
CO3		0	0
Cl		68.4	68.4
SO4		2890	2890
Ca		246	246
Mg		192	192
K		8.31	8.31
Na		920	920
Cat/An		1.05	1.05
Fe		.30	.30
Mn		.07	.07

WATER MONITORING REPORT

Property: CV Spur
Station: CV-3-W
Location: South Truckyard
Type: Well
Frequency: Bi-Annual

Field Measurements	Date Sampled 05/27/91	11/25/91	Mean
DFS [ft]	4	3.5	3.75
PH	8.0	7.4	7.7
Sp. Cond. [ohms]	3600	4000	3800
Temp. [C]	8	4	6
Diss. O [ppm]	N/R	N/R	N/R
Lab. Meas. [mg/l]			
TDS	3390	3420	3404
TSS	258	4	131
O & G	N/A	N/A	N/A
Al CaCO3	231	249	240
Hd CaCO3	1690	1800	1745
Ac CaCO3	0	0	0
HCO3	281	304	292.5
CO3	0	0	0
Cl	29.3	28.3	28.8
SO4	2200	2250	2225
Ca	432	458	445
Mg	148	161	154.5
K	9.52	10.2	9.96
Na	341	363	352
Cat/An	2.5	.52	1.51
Fe	3.04	5.07	4.06
Mn	.19	1.43	1.62

WATER MONITORING REPORT

Property: CV Spur
Station: CV-4-W
Location: NE Corner of Property
Type: Well
Frequency: Bi-Annually

Field Measurements	Date Sampled 05/27/91	11/25/91	Mean
Flow [gpm]	DRY	DRY	DRY
PH			
Sp. Cond. [ohms]			
Temp. [C]			
Diss. O [ppm]			
Lab. Meas. [mg/l]			
TDS			
TSS			
O & G			
Al CaCO3			
Hd CaCO3			
Ac CaCO3			
HCO3			
CO3			
Cl			
SO4			
Ca			
Mg			
K			
Na			
Cat/An			
Fe			
Mn			

WATER MONITORING REPORT

Property: CV Spur
Station: CV-5-W
Location: N Central Property
Type: Well
Frequency: Bi-Annually

Field Measurements	Date Sampled 05/27/91	11/25/91	Mean
Flow [gpm]	DRY	DRY	DRY
PH			
Sp. Cond. [ohms]			
Temp. [C]			
Diss. O [ppm]			
Lab. Meas. [mg/l]			
TDS			
TSS			
O & G			
Al CaCO3			
Hd CaCO3			
Ac CaCO3			
HCO3			
CO3			
Cl			
SO4			
Ca			
Mg			
K			
Na			
Cat/An			
Fe			
Mn			

WATER MONITORING REPORT

Property: CV Spur
Station: CV-6-W
Location: East Central Property
Type: Well
Frequency: Bi-Annual

Field Measurements	Date Sampled 05/27/91	11/25/91	Mean
DFS [ft]	6	4' 8"	5' 4"
PH	8.0	7.8	7.9
Sp. Cond. [ohms]	3990	4000	3995
Temp. [C]	9	5	7
Diss. O [ppm]	N/R	N/R	N/R
Lab. Meas. [mg/l]			
TDS	3860	3780	3820
TSS	64	298	181
O & G	N/R	N/R	N/R
Al CaCO3	212	233	223
Hd CaCO3	1810	2070	1940
Ac CaCO3	0	0	0
HCO3	259	284	271.5
CO3	0	0	0
Cl	176	170	173
SO4	2440	2300	2370
Ca	423	512	472
Mg	183	193	188
K	13.9	14.5	14.2
Na	492	337	414.5
Cat/An	1.89	.84	1.36
Fe	1.26	2.53	1.895
Mn	.02	.07	.05

WATER MONITORING REPORT

Property: CV Spur
Station: CV-10-W
Location: SE Adj. to Property
Type: Well
Frequency: Bi-Annually

Field Measurements	Date Sampled 5/27/91	11/25/91	Mean
Flow [gpm]	DRY	DRY	DRY
PH			
Sp. Cond. [ohms]			
Temp. [C]			
Diss. O [ppm]			
Lab. Meas. [mg/l]			
TDS			
TSS			
O & G			
Al CaCO3			
Hd CaCO3			
Ac CaCO3			
HCO3			
CO3			
Cl			
SO4			
Ca			
Mg			
K			
Na			
Cat/An			
Fe			
Mn			

WATER MONITORING REPORT

Property: CV Spur
Station: CV-11-W
Location: NE Adj to Property
Type: Well
Frequency: Bi-Annually

Field Measurements	Date Sampled 05/27/91	11/25/91	Mean
DFS [ft]	4	7.4	5.7
PH	8	8.3	8.15
Sp. Cond. [ohms]	35000	30000+	32500
Temp. [C]	9	4	6.5
Diss. O [ppm]	N/R	N/R	N/R
Lab. Meas. [mg/l]			
TDS	44500	41200	42850
TSS	164	133	148.5
O & G	N/R	N/R	N/R
Al CaCO3	997	1130	1063.5
Hd CaCO3	11500	10500	11000
Ac CaCO3	0	0	0
HCO3	1210	1380	1295
CO3	0	0	0
Cl	415	474	444.5
SO4	30900	27770	29335
Ca	424	421	423.5
Mg	2540	2300	2420
K	20.1	19.3	24.7
Na	9570	9500	9535
Cat/An	2.15	.78	1.47
Fe	2.28	2.39	2.34
Mn	1.14	.46	.8

WATER MONITORING REPORT

Property: CV Spur
Station: CV-12-W
Location: North Adj. To Property
Type: Well
Frequency: Bi-Annually

Field Measurements	Date Sampled 05/27/91	11/25/91	Mean
Flow [FS]	DRY	DRY	DRY
PH			
Sp. Cond. [ohms]			
Temp. [C]			
Diss. O [ppm]			
Lab. Meas. [mg/l]			
TDS			
TSS			
O & G			
Al CaCO3			
Hd CaCO3			
Ac CaCO3			
HCO3			
CO3			
Cl			
SO4			
Ca			
Mg			
K			
Na			
Cat/An			
Fe			
Mn			

WATER MONITORING REPORT

Property: CV Spur
Station: CV-14-W
Location: NE Property
Type: Ditch
Frequency: Bi-Annually

Field Measurements	Date Sampled 05/27/91	11/25/91	Mean
Flow [gpm]	DRY	DRY	DRY
PH			
Sp. Cond. [ohms]			
Temp. [C]			
Diss. O [ppm]			
Lab. Meas. [mg/l]			
TDS			
TSS			
O & G			
Al CaCO3			
Hd CaCO3			
Ac CaCO3			
HCO3			
CO3			
Cl			
SO4			
Ca			
Mg			
K			
Na			
Cat/An			
Fe			
Mn			

WATER MONITORING REPORT

Property: Castle Valley Spur
Station: CV-15-W
Location: Sed. Pond Discharge
Type: Pond Outlet
Frequency: Monthly

Field Measurements	Date Sampled 01/07/91	02/25/91	03/07/91	04/03/91	05/27/91	06/16/91	07/30/91	08/09/91	09/18/91	10/20/91	11/25/91	12/18/91	Mean
Flow [gpm]	DRY	DRY	DRY	DRY	DRY	DRY	DRY	DRY	DRY	DRY	DRY	DRY	DRY
PH													
Sp.Con. [ohms]													
Temp [C]													
Diss. O. [ppm]													
Lab. Meas. [mg/l]	NPDES - See Lab Sheet												
TDS													
TSS													
O & G													
Al CaCO3													
Hd CaCO3													
Ac CaCO3													
HCO3													
CO3													
Cl													
SO4													
Ca													
Mg													
K													
Na													
Cat/An													
Fe													
Mn													

WATER MONITORING REPORT

Property: CV Spur
Station: CV-16-W
Location: West [Central]
Type: Ditch
Frequency: Quarterly [Baseline]

Field Measurements	Date Sampled 02/25/91	05/27/91	08/09/91	11/25/91	Mean
Flow [gpm]	DRY	DRY	DRY	DRY	DRY
PH					
Sp. Cond. [ohms]					
Temp. [C]					
Diss. O [ppm]					

Lab. Meas. [mg/l]	See Baseline Lab Report
TDS	
TSS	
O & G	
Al CaCO3	
Hd CaCO3	
Ac CaCO3	
HCO3	
CO3	
Cl	
SO4	
Ca	
Mg	
K	
Na	
Cat/An	
Fe	
Mn	

U.P.D.E.S.

DISCHARGE DATA

Mountain Coal Company
Trail Mountain Mine
Post Office Box 1378
Price, Utah 84501
Telephone 801 637-5050 (Price Office)
801 637-5203 (Mine Office)
801 748-2140 (Mine Site)

January 28, 1992

Mr. Donald A Hilden, PH.D., Chief
Permits and Compliance Section
Bureau of Water Pollution Control
Utah Division of Environmental Health
288 North 1460 West
P.O. Box 16690
Salt Lake City, Utah 84116-0690

Dear Mr. Hilden:

Enclosed please find Quarterly Discharge Monitoring Reports for Mountain Coal Company's UPDES Permit Numbers UTG040003, UTG040004, UTG040005, UTG040014 and UTG040015. These reports are on the preprinted DMRs provided by the State of Utah, and cover the fourth quarter of 1991.

If you have any questions or need any additional information, please contact me.

Respectfully,

Dan W. Guy
Manager Permitting/Compliance

DWG/cr

Enclosures

cc: Donna Franklin, E.P.A.
Lowell Braxton, UDOGM
File

Mountain Coal Company
Trail Mountain Mine
Post Office Box 1378
Price, Utah 84501
Telephone 801 637-5050 (Price Office)
801 637-5203 (Mine Office)
801 748-2140 (Mine Site)

January 28, 1992

Ms. Donna Franklin
U.S.E.P.A., Region VIII
999 18th Street
Denver, Place - Suite 500 WM-C
Denver, CO 80202-2405

Dear Ms. Franklin:

Enclosed please find Quarterly Discharge Monitoring Reports for Mountain Coal Company's UPDES Permit Numbers UTG040003, UTG040004, UTG040005, UTG040014 and UTG040015. These reports are on the preprinted DMRs provided by the State of Utah, and cover the fourth quarter of 1991.

If you have any questions or need any additional information, please contact me.

Respectfully,

Dan W. Guy
Manager Permitting/Compliance

DWG/cr

Enclosures

Mountain Coal Company
Trail Mountain Mine
Post Office Box 1378
Price, Utah 84501
Telephone 801 637-5050 (Price Office)
801 637-5203 (Mine Office)
801 748-2140 (Mine Site)

January 28, 1992

Mr. Lowell Braxton, Administrator
Utah Division of Oil, Gas & Mining
355 West North Temple
#3 Triad Center, Suite 350
Salt Lake City, Utah 84190-1203

Dear Mr. Braxton:

Enclosed please find Quarterly Discharge Monitoring Reports for Mountain Coal Company's UPDES Permit Numbers UTG040003, UTG040004, UTG040005, UTG040014 and UTG040015. These reports are on the pre-printed DMRs provided by the State of Utah, and cover the fourth quarter of 1991.

If you have any questions or need any additional information, please contact me.

Respectfully,

Dan W. Guy
Manager Permitting/Compliance

DWG/cr

Enclosures

PERMITTEE NAME/A ESS (Include Facility Name/Location if different)
NAME BEAVER CREEK COAL--CV SPUR
ADDRESS P.O. BOX 1378
PRICE UT 84501

FACILITY
LOCATION
ATTN: DAN W. GUY, MANAGER

NATIONAL POLLUTANT L ARGE ELIMINATION SYSTEM (NPDES)
DISCHARGE MONITORING REPORT (DMR)

(2-16) PERMIT NUMBER	(17-19) DISCHARGE NUMBER
UTG040005	001 A

F - FINAL
SED PND OTFL-DRNG DTCH/PRC RVR

MONITORING PERIOD	YEAR	MO	DAY		YEAR	MO	DAY
FROM	91	10	01	TO	91	10	31
	(20-21)	(22-23)	(24-25)		(26-27)	(28-29)	(30-31)

MINOR
NOTE: Read instructions before completing this form.

PARAMETER (32-37)		(3 Card Only) QUANTITY OR LOADING (46-53) AVERAGE	(54-61) MAXIMUM	UNITS	(4 Card Only) QUALITY OR CONCENTRATION (38-45) MINIMUM	(46-53) AVERAGE	(54-61) MAXIMUM	UNITS	NO. EX (62-63)	FREQUENCY OF ANALYSIS (64-68)	SAMPLE TYPE (69-70)
SANITARY WASTE DISCHARGED-ASSESSMNT	SAMPLE MEASUREMENT	******			******	******	******				
45610 1 0 0 EFFLUENT GROSS VALUE	PERMIT REQUIREMENT	******	0 DAILY MX	YES=1 NO=0	******	******	******	**** ****		ONCE/ MONTH	VISUAL
SOLIDS, TOTAL DISSOLVED	SAMPLE MEASUREMENT	******			******	******					
70295 0 0 0 SEE COMMENTS BELOW	PERMIT REQUIREMENT	******	2000 DAILY MX	LBS/DY	******	******	REPORT DAILY MX	MG/L		ONCE/ MONTH	GRAB
	SAMPLE MEASUREMENT										
	PERMIT REQUIREMENT										
	SAMPLE MEASUREMENT										
	PERMIT REQUIREMENT										
	SAMPLE MEASUREMENT										
	PERMIT REQUIREMENT										
	SAMPLE MEASUREMENT										
	PERMIT REQUIREMENT										
	SAMPLE MEASUREMENT										
	PERMIT REQUIREMENT										

NAME/TITLE PRINCIPAL EXECUTIVE OFFICER		TELEPHONE		DATE		
Dan W. Guy Permitting & Compliance	I CERTIFY UNDER PENALTY OF LAW THAT I HAVE PERSONALLY EXAMINED AND AM FAMILIAR WITH THE INFORMATION SUBMITTED HEREIN AND BASED ON MY INQUIRY OF THOSE INDIVIDUALS IMMEDIATELY RESPONSIBLE FOR OBTAINING THE INFORMATION I BELIEVE THE SUBMITTED INFORMATION IS TRUE ACCURATE AND COMPLETE I AM AWARE THAT THERE ARE SIGNIFICANT PENALTIES FOR SUBMITTING FALSE INFORMATION INCLUDING THE POSSIBILITY OF FINE AND IMPRISONMENT SEE 18 USC § 1001 AND 33 USC § 1319 (Penalties under these statutes may include fines up to $10,000 and/or maximum imprisonment of between 6 months and 5 years)	SIGNATURE OF PRINCIPAL EXECUTIVE OFFICER OR AUTHORIZED AGENT	801	637-5050	91	10	31
TYPED OR PRINTED			AREA CODE	NUMBER	YEAR	MO	DAY

COMMENT AND EXPLANATION OF ANY VIOLATIONS (Reference all attachments here)

TDS IS LIMITED TO ONE TON PER DAY FROM ALL OUTFALLS. DURING PRECIPITATION EVENTS, SETTLEABLE SOLIDS SHALL BE LIMITED INSTEAD OF TSS. REPORT "DOES NOT APPLY" IN THE APPROPRIATE ROW.

PERMITTEE NAME/ADDRESS (Include Facility Name/Location if different)

NAME BEAVER CREEK COAL--CV SPUR

ADDRESS P.O. BOX 1378

PRICE UT 84501

FACILITY

LOCATION

ATTN: DAN W. GUY, MANAGER

NATIONAL POLLUTANT DISCHARGE ELIMINATION SYSTEM (NPDES)
DISCHARGE MONITORING REPORT (DMR)

(2-16) UTG040005 — PERMIT NUMBER

(17-19) 001 A — DISCHARGE NUMBER

P - FINAL

SED PND OTFL-DRNG DPCH/PRC RVR

MONITORING PERIOD

	YEAR	MO	DAY		YEAR	MO	DAY
FROM	91	11	01	TO	91	11	30
	(20-21)	(22-23)	(24-25)		(26-27)	(28-29)	(30-31)

MINOR

NOTE: Read instructions before completing this form.

PARAMETER (32-37)		(3 Card Only) QUANTITY OR LOADING (46-53) AVERAGE	(54-61) MAXIMUM	UNITS	(4 Card Only) QUALITY OR CONCENTRATION (38-45) MINIMUM	(46-53) AVERAGE	(54-61) MAXIMUM	UNITS	NO. EX (62-63)	FREQUENCY OF ANALYSIS (64-68)	SAMPLE TYPE (69-70)
FLOW RATE	SAMPLE MEASUREMENT	NO DISCHARGE			******	******	******				
00056 1 0 0 EFFLUENT GROSS VALUE	PERMIT REQUIREMENT	REPORT 30 DA AV	REPORT DAILY MX	GPD	******	******	******	**** ****		ONCE/MONTH	MEASRD
PH	SAMPLE MEASUREMENT	******	******			******					
00400 1 0 0 EFFLUENT GROSS VALUE	PERMIT REQUIREMENT	******	******	**** ****	6.5 DAILY MN	******	9.0 DAILY MX	SU		TWICE/MONTH	GRAB
SOLIDS, TOTAL SUSPENDED	SAMPLE MEASUREMENT	******	******		******						
00530 P 0 0 SEE COMMENTS BELOW	PERMIT REQUIREMENT	******	******	**** ****	******	25 30 DA AV	70 DAILY MX	MG/L		ONCE/MONTH	GRAB
SOLIDS, SETTLEABLE	SAMPLE MEASUREMENT	******	******		******	******					
00545 R 0 0 SEE COMMENTS BELOW	PERMIT REQUIREMENT	******	******	**** ****	******	******	0.5 DAILY MX	ML/L		ONCE/MONTH	GRAB
OIL AND GREASE FREON EXTR-GRAV METH	SAMPLE MEASUREMENT	******	******		******	******					
00556 1 0 0 EFFLUENT GROSS VALUE	PERMIT REQUIREMENT	******	******	**** ****	******	******	10 DAILY MX	MG/L		ONCE/MONTH	GRAB
IRON, TOTAL (AS FE)	SAMPLE MEASUREMENT	******	******		******	******					
01045 1 0 0 EFFLUENT GROSS VALUE	PERMIT REQUIREMENT	******	******	**** ****	******	******	2.0 DAILY MX	MG/L		ONCE/MONTH	GRAB
FLOATING SOLIDS OR VISIBLE FOAM-VISUAL	SAMPLE MEASUREMENT	******			******	******	******				
45613 1 0 0 EFFLUENT GROSS VALUE	PERMIT REQUIREMENT	******	0 DAILY MX	YES=1 NO=0	******	******	******	**** ****		ONCE/MONTH	VISUAL

NAME/TITLE PRINCIPAL EXECUTIVE OFFICER

Dan W. Guy
Permitting & Compliance

TYPED OR PRINTED

I CERTIFY UNDER PENALTY OF LAW THAT I HAVE PERSONALLY EXAMINED AND AM FAMILIAR WITH THE INFORMATION SUBMITTED HEREIN, AND BASED ON MY INQUIRY OF THOSE INDIVIDUALS IMMEDIATELY RESPONSIBLE FOR OBTAINING THE INFORMATION I BELIEVE THE SUBMITTED INFORMATION IS TRUE, ACCURATE AND COMPLETE. I AM AWARE THAT THERE ARE SIGNIFICANT PENALTIES FOR SUBMITTING FALSE INFORMATION, INCLUDING THE POSSIBILITY OF FINE AND IMPRISONMENT. SEE 18 USC § 1001 AND 33 USC § 1319. (Penalties under these statutes may include fines up to $10,000 and/or maximum imprisonment of between 6 months and 5 years.)

Dan W. Guy

SIGNATURE OF PRINCIPAL EXECUTIVE OFFICER OR AUTHORIZED AGENT

TELEPHONE		DATE		
801	637-5050	91	11	30
AREA CODE	NUMBER	YEAR	MO	DAY

COMMENT AND EXPLANATION OF ANY VIOLATIONS (Reference all attachments here)

TDS IS LIMITED TO ONE TON PER DAY FROM ALL OUTFALLS. DURING PRECIPITATION EVENTS, SETTLEABLE SOLIDS SHALL BE LIMITED INSTEAD OF TSS. REPORT "DOES NOT APPLY" IN THE APPROPRIATE ROW.

PERMITTEE NAME/ ESS (Include Facility Name/Location i, rent)
NAME BEAVER CREEK COAL--CV SPUR
ADDRESS P.O. BOX 1378
PRICE UT 84501

FACILITY
LOCATION
ATTN: DAN W. GUY, MANAGER

NATIONAL POLLUTANT DISCHARGE ARGE ELIMINATION SYSTEM (NPDES) MONITORING REPORT (DMR)

(2-16)	(17-19)
UTG040005	001 A
PERMIT NUMBER	DISCHARGE NUMBER

F - FINAL
SED PND OTFL-DRNS DTCH/PRC RVR

MONITORING PERIOD

FROM YEAR	MO	DAY	TO YEAR	MO	DAY
91	11	01	91	11	30
(20-21)	(22-23)	(24-25)	(26-27)	(28-29)	(30-31)

MINOR
NOTE: Read instructions before completing this form.

PARAMETER (32-37)		(3 Card Only) QUANTITY OR LOADING (46-53) AVERAGE	(54-61) MAXIMUM	UNITS	(4 Card Only) QUALITY OR CONCENTRATION (38-45) MINIMUM	(46-53) AVERAGE	(54-61) MAXIMUM	UNITS	NO. EX (62-63)	FREQUENCY OF ANALYSIS (64-68)	SAMPLE TYPE (69-70)
SANITARY WASTE DISCHARGED-ASSESSMENT	SAMPLE MEASUREMENT	******			******	******	******				
45614 1 0 0 EFFLUENT GROSS VALUE	PERMIT REQUIREMENT	******	0 DAILY MX	YES=1 NO=0	******	******	******	**** ****		ONCE/ MONTH	VISUAL
SOLIDS, TOTAL DISSOLVED	SAMPLE MEASUREMENT	******			******	******					
70295 0 0 0 SEE COMMENTS BELOW	PERMIT REQUIREMENT	******	2000 DAILY MX	LBS/DY	******	******	REPORT DAILY MX	MG/L		ONCE/ MONTH	GRAB
	SAMPLE MEASUREMENT										
	PERMIT REQUIREMENT										
	SAMPLE MEASUREMENT										
	PERMIT REQUIREMENT										
	SAMPLE MEASUREMENT										
	PERMIT REQUIREMENT										
	SAMPLE MEASUREMENT										
	PERMIT REQUIREMENT										
	SAMPLE MEASUREMENT										
	PERMIT REQUIREMENT										

NAME/TITLE PRINCIPAL EXECUTIVE OFFICER
Dan W. Guy
Permitting & Compliance
TYPED OR PRINTED

I CERTIFY UNDER PENALTY OF LAW THAT I HAVE PERSONALLY EXAMINED AND AM FAMILIAR WITH THE INFORMATION SUBMITTED HEREIN, AND BASED ON MY INQUIRY OF THOSE INDIVIDUALS IMMEDIATELY RESPONSIBLE FOR OBTAINING THE INFORMATION I BELIEVE THE SUBMITTED INFORMATION IS TRUE ACCURATE AND COMPLETE I AM AWARE THAT THERE ARE SIGNIFICANT PENALTIES FOR SUBMITTING FALSE INFORMATION, INCLUDING THE POSSIBILITY OF FINE AND IMPRISONMENT SEE 18 USC § 1001 AND 33 USC § 1319 (Penalties under these statutes may include fines up to $10,000 and or maximum imprisonment of between 6 months and 5 years.)

Dan W. Guy
SIGNATURE OF PRINCIPAL EXECUTIVE OFFICER OR AUTHORIZED AGENT

TELEPHONE: AREA CODE 801, NUMBER 637-5050

DATE: YEAR 91, MO 11, DAY 30

COMMENT AND EXPLANATION OF ANY VIOLATIONS (Reference all attachments here)

TDS IS LIMITED TO ONE TON PER DAY FROM ALL OUTFALLS. DURING PRECIPITATION EVENTS, SETTLEABLE SOLIDS SHALL BE LIMITED INSTEAD OF TSS. REPORT "DOES NOT APPLY" IN THE APPROPRIATE ROW.

PERMITTEE NAME/ADDRESS (Include Facility Name/Location rent)

NAME BEAVER CREEK COAL--CV SPUR

ADDRESS P.O. BOX 1378

PRICE UT 84501

FACILITY

LOCATION

ATTN: DAN W. GUY, MANAGER

NATIONAL POLLUTANT DISCHARGE MONITORING REPORT (DMR) ELIMINATION SYSTEM (NPDES)

(2-16) UTG040005 PERMIT NUMBER

(17-19) 001 A DISCHARGE NUMBER

F - FINAL

SED PND OTFL-DRNG DTCH/PRC RVR

MONITORING PERIOD

FROM YEAR (20-21)	MO (22-23)	DAY (24-25)	TO YEAR (26-27)	MO (28-29)	DAY (30-31)
91	12	01	91	12	31

MINOR

NOTE: Read instructions before completing this form.

PARAMETER (32-37)		(3 Card Only) QUANTITY OR LOADING (46-53) AVERAGE	(54-61) MAXIMUM	UNITS	(4 Card Only) QUALITY OR CONCENTRATION (38-45) MINIMUM	(46-53) AVERAGE	(54-61) MAXIMUM	UNITS	NO. EX (62-63)	FREQUENCY OF ANALYSIS (64-68)	SAMPLE TYPE (69-70)
FLOW RATE	SAMPLE MEASUREMENT	NO DISCHARGE			******	******	******				
00056 1 0 0 EFFLUENT GROSS VALUE	PERMIT REQUIREMENT	REPORT 30 DA AV	REPORT DAILY MX	GPD	******	******	******	**** ****		ONCE/MONTH	MEASRD
PH	SAMPLE MEASUREMENT	******	******			******					
00400 1 0 0 EFFLUENT GROSS VALUE	PERMIT REQUIREMENT	******	******	**** ****	5.5 DAILY MN	******	9.0 DAILY MX	SU		ONCE/MONTH	GRAB
SOLIDS, TOTAL SUSPENDED	SAMPLE MEASUREMENT	******	******		******						
00530 P 0 0 SEE COMMENTS BELOW	PERMIT REQUIREMENT	******	******	**** ****	******	25 30 DA AV	70 DAILY MX	MG/L		ONCE/MONTH	GRAB
SOLIDS, SETTLEABLE	SAMPLE MEASUREMENT	******	******		******	******					
00545 R 0 0 SEE COMMENTS BELOW	PERMIT REQUIREMENT	******	******	**** ****	******	******	0.5 DAILY MX	ML/L		ONCE/MONTH	GRAB
OIL AND GREASE FREON EXTR-GRAV METH	SAMPLE MEASUREMENT	******	******		******	******					
00556 1 0 0 EFFLUENT GROSS VALUE	PERMIT REQUIREMENT	******	******	**** ****	******	******	10 DAILY MX	MG/L		ONCE/MONTH	GRAB
IRON, TOTAL (AS FE)	SAMPLE MEASUREMENT	******	******		******	******					
01045 1 0 0 EFFLUENT GROSS VALUE	PERMIT REQUIREMENT	******	******	**** ****	******	******	2.0 DAILY MX	MG/L		ONCE/MONTH	GRAB
FLOATING SOLIDS OR VISIBLE FOAM-VISUAL	SAMPLE MEASUREMENT	******			******	******	******				
45613 1 0 0 EFFLUENT GROSS VALUE	PERMIT REQUIREMENT	******	0. DAILY MX	YES=1 NO=0	******	******	******	**** ****		ONCE/MONTH	VISUAL

NAME/TITLE PRINCIPAL EXECUTIVE OFFICER

Dan W. Guy
Permitting & Compliance

TYPED OR PRINTED

I CERTIFY UNDER PENALTY OF LAW THAT I HAVE PERSONALLY EXAMINED AND AM FAMILIAR WITH THE INFORMATION SUBMITTED HEREIN, AND BASED ON MY INQUIRY OF THOSE INDIVIDUALS IMMEDIATELY RESPONSIBLE FOR OBTAINING THE INFORMATION I BELIEVE THE SUBMITTED INFORMATION IS TRUE ACCURATE AND COMPLETE I AM AWARE THAT THERE ARE SIGNIFICANT PENALTIES FOR SUBMITTING FALSE INFORMATION INCLUDING THE POSSIBILITY OF FINE AND IMPRISONMENT SEE 18 USC § 1001 AND 33 USC § 1319 (Penalties under these statutes may include fines up to $10,000 and or maximum imprisonment of between 6 months and 5 years)

Dan W. Guy

SIGNATURE OF PRINCIPAL EXECUTIVE OFFICER OR AUTHORIZED AGENT

TELEPHONE AREA CODE	NUMBER	DATE YEAR	MO	DAY
801	637-5050	91	12	31

COMMENT AND EXPLANATION OF ANY VIOLATIONS (Reference all attachments here)

TDS IS LIMITED TO ONE TON PER DAY FROM ALL OUTFALLS. DURING PRECIPITATION EVENTS, SETTLEABLE SOLIDS SHALL BE LIMITED INSTEAD OF TSS. REPORT "DOES NOT APPLY" IN THE APPROPRIATE ROW.

PERMITTEE NAME/A ESS (Include Facility Name/Location i ent)
NAME BEAVER CREEK COAL--CV SPUR
ADDRESS P.O. BOX 1378
PRICE UT 84501

FACILITY
LOCATION
ATTN: DAN W. GUY, MANAGER

NATIONAL POLLUTANT ARGE ELIMINATION SYSTEM (NPDES)
DISCHARGE ITORING REPORT (DMR)

PERMIT NUMBER (2-16)	DISCHARGE NUMBER (17-19)
UTG040005	001 A

F - FINAL
SED PND OTFL-DRNG DTCH/PRC RVR

MONITORING PERIOD	YEAR	MO	DAY		YEAR	MO	DAY
FROM	91	12	01	TO	91	12	31
	(20-21)	(22-23)	(24-25)		(26-27)	(28-29)	(30-31)

MINOR
NOTE: Read instructions before completing this form.

PARAMETER (32-37)		(3 Card Only) (46-53) QUANTITY OR LOADING (54-61) AVERAGE	MAXIMUM	UNITS	(4 Card Only) (38-45) QUALITY OR CONCENTRATION (46-53) MINIMUM	AVERAGE	MAXIMUM	UNITS	NO. EX (62-63)	FREQUENCY OF ANALYSIS (64-68)	SAMPLE TYPE (69-70)
SANITARY WASTE DISCHARGED-ASSESSMNT 45614 1 0 0 EFFLUENT GROSS VALUE	SAMPLE MEASUREMENT	******			******	******	******				
	PERMIT REQUIREMENT	******	0 DAILY MX	YES=1 NO=0	******	******	******	**** ****		ONCE/ MONTH	VISUAL
SOLIDS, TOTAL DISSOLVED 70295 0 0 0 SEE COMMENTS BELOW	SAMPLE MEASUREMENT	******			******	******					
	PERMIT REQUIREMENT	******	2000 DAILY MX	LBS/DY	******	******	REPORT DAILY MX	MG/L		ONCE/ MONTH	GRAB
	SAMPLE MEASUREMENT										
	PERMIT REQUIREMENT										
	SAMPLE MEASUREMENT										
	PERMIT REQUIREMENT										
	SAMPLE MEASUREMENT										
	PERMIT REQUIREMENT										
	SAMPLE MEASUREMENT										
	PERMIT REQUIREMENT										
	SAMPLE MEASUREMENT										
	PERMIT REQUIREMENT										

NAME/TITLE PRINCIPAL EXECUTIVE OFFICER
Dan W. Guy
Permitting & Compliance
TYPED OR PRINTED

I CERTIFY UNDER PENALTY OF LAW THAT I HAVE PERSONALLY EXAMINED AND AM FAMILIAR WITH THE INFORMATION SUBMITTED HEREIN, AND BASED ON MY INQUIRY OF THOSE INDIVIDUALS IMMEDIATELY RESPONSIBLE FOR OBTAINING THE INFORMATION, I BELIEVE THE SUBMITTED INFORMATION IS TRUE, ACCURATE AND COMPLETE. I AM AWARE THAT THERE ARE SIGNIFICANT PENALTIES FOR SUBMITTING FALSE INFORMATION, INCLUDING THE POSSIBILITY OF FINE AND IMPRISONMENT. SEE 18 USC § 1001 AND 33 USC § 1319. *(Penalties under these statutes may include fines up to $10,000 and/or maximum imprisonment of between 6 months and 5 years.)*

Dan W. Guy
SIGNATURE OF PRINCIPAL EXECUTIVE OFFICER OR AUTHORIZED AGENT

TELEPHONE		DATE		
AREA CODE	NUMBER	YEAR	MO	DAY
801	637-5050	91	12	31

COMMENT AND EXPLANATION OF ANY VIOLATIONS *(Reference all attachments here)*

TDS IS LIMITED TO ONE TON PER DAY FROM ALL OUTFALLS. DURING PRECIPITATION EVENTS, SETTLEABLE SOLIDS SHALL BE LIMITED INSTEAD OF TSS. REPORT "DOES NOT APPLY" IN THE APPROPRIATE ROW.

PERMITTEE NAME/ ESS (Include Facility Name/Location ent)

NAME BEAVER CREEK COAL--CV SPUR

ADDRESS P.O. BOX 1378

PRICE UT 84501

FACILITY

LOCATION

ATTN: DAN W. GUY, MANAGER

NATIONAL POLLUTANT DISCHARGE ARGE ELIMINATION SYSTEM (NPDES) ITORING REPORT (DMR)

(2-16) (17-19)

UTG040005 — PERMIT NUMBER

001 A — DISCHARGE NUMBER

P -. FINAL

SED PND OTFL-DRNG DTCH/PRC RVR

MONITORING PERIOD

FROM YEAR	MO	DAY	TO YEAR	MO	DAY
91	10	01	91	10	31
(20-21)	(22-23)	(24-25)	(26-27)	(28-29)	(30-31)

MINOR

NOTE: Read instructions before completing this form.

PARAMETER (32-37)		(3 Card Only) (46-53) QUANTITY OR LOADING (54-61) AVERAGE	MAXIMUM	UNITS	(4 Card Only) (38-45) QUALITY OR CONCENTRATION (46-53) MINIMUM	AVERAGE	(54-61) MAXIMUM	UNITS	NO. EX (62-63)	FREQUENCY OF ANALYSIS (64-68)	SAMPLE TYPE (69-70)
FLOW RATE	SAMPLE MEASUREMENT	NO	DISCHARGE		******	******	******				
00056 1 0 0 EFFLUENT GROSS VALUE	PERMIT REQUIREMENT	REPORT 30 DA AV	REPORT DAILY MX	GPD	******	******	******	**** ****		ONCE/ MONTH	MEASRD
PH	SAMPLE MEASUREMENT	******	******			******					
00400 1 0 0 EFFLUENT GROSS VALUE	PERMIT REQUIREMENT	******	******	**** ****	6.5 DAILY MN	******	9.0 DAILY MX	SU		TWICE/ MONTH	GRAB
SOLIDS, TOTAL SUSPENDED	SAMPLE MEASUREMENT	******	******		******						
00530 P 0 0 SEE COMMENTS BELOW	PERMIT REQUIREMENT	******	******	**** ****	******	25 30 DA AV	70 DAILY MX	MG/L		ONCE/ MONTH	GRAB
SOLIDS, SETTLEABLE	SAMPLE MEASUREMENT	******	******		******	******					
00545 R 0 0 SEE COMMENTS BELOW	PERMIT REQUIREMENT	******	******	**** ****	******	******	0.5 DAILY MX	ML/L		ONCE/ MONTH	GRAB
OIL AND GREASE FREON EXTR-GRAV METH	SAMPLE MEASUREMENT	******	******		******	******					
00556 1 0 0 EFFLUENT GROSS VALUE	PERMIT REQUIREMENT	******	******	**** ****	******	******	10 DAILY MX	MG/L		ONCE/ MONTH	GRAB
IRON, TOTAL (AS FE)	SAMPLE MEASUREMENT	******	******		******	******					
01045 1 0 0 EFFLUENT GROSS VALUE	PERMIT REQUIREMENT	******	******	**** ****	******	******	2.0 DAILY MX	MG/L		ONCE/ MONTH	GRAB
FLOATING SOLIDS OR VISIBLE FOAM-VISUAL	SAMPLE MEASUREMENT	******			******	******	******				
45613 1 0 0 EFFLUENT GROSS VALUE	PERMIT REQUIREMENT	******	0 DAILY MX	YES=1 NO=0	******	******	******	**** ****		ONCE/ MONTH	VISUAL

NAME/TITLE PRINCIPAL EXECUTIVE OFFICER

Dan W. Guy
Permitting & Compliance

TYPED OR PRINTED

I CERTIFY UNDER PENALTY OF LAW THAT I HAVE PERSONALLY EXAMINED AND AM FAMILIAR WITH THE INFORMATION SUBMITTED HEREIN AND BASED ON MY INQUIRY OF THOSE INDIVIDUALS IMMEDIATELY RESPONSIBLE FOR OBTAINING THE INFORMATION I BELIEVE THE SUBMITTED INFORMATION IS TRUE ACCURATE AND COMPLETE I AM AWARE THAT THERE ARE SIGNIFICANT PENALTIES FOR SUBMITTING FALSE INFORMATION, INCLUDING THE POSSIBILITY OF FINE AND IMPRISONMENT SEE 18 USC § 1001 AND 33 USC § 1319 (Penalties under these statutes may include fines up to $10,000 and or maximum imprisonment of between 6 months and 5 years.)

Dan W. Guy

SIGNATURE OF PRINCIPAL EXECUTIVE OFFICER OR AUTHORIZED AGENT

TELEPHONE AREA CODE	NUMBER	DATE YEAR	MO	DAY
801	637-5050	91	10	31

COMMENT AND EXPLANATION OF ANY VIOLATIONS (Reference all attachments here)

TDS IS LIMITED TO ONE TON PER DAY FROM ALL OUTFALLS. DURING PRECIPITATION EVENTS, SETTLEABLE SOLIDS SHALL BE LIMITED INSTEAD OF TSS. REPORT "DOES NOT APPLY" IN THE APPROPRIATE ROW.

Mountain Coal Company
Trail Mountain Mine
Post Office Box 1378
Price, Utah 84501
Telephone 801 637-5050 (Price Office)
801 637-5203 (Mine Office)
801 748-2140 (Mine Site)

October 31, 1991

Mr. Donald A. Hilden, PH.D., Chief
Permits and Compliance Section
Bureau of Water Pollution Control
Utah Division of Environmental Health
288 North 1460 West
P.O. Box 16690
Salt Lake City, Utah 84116-0690

Dear Mr. Hilden:

Enclosed please find Quarterly Discharge Monitoring Reports for Mountain Coal Company's UPDES Permit Numbers UTG040003, UTG040004, UTG040005, UTG040014 and UTG040015. These reports are on the preprinted DMRs provided by the State of Utah, and cover the third quarter of 1991.

If you have any questions or need any additional information, please contact me.

Respectfully,

Dan W. Guy
Manager Permitting/Compliance

DWG/rs

Enclosures

cc: Donna Franklin, E.P.A.
Lowell Braxton, UDOGM
File

Mountain Coal Company
Trail Mountain Mine
Post Office Box 1378
Price, Utah 84501
Telephone 801 637-5050 (Price Office)
801 637-5203 (Mine Office)
801 748-2140 (Mine Site)

October 31, 1991

Ms. Donna Franklin
U.S.E.P.A., Region VIII
999 18th Street
Denver, Place - Suite 500 WM-C
Denver, CO 80202-2405

Dear Ms. Franklin:

Enclosed please find Quarterly Discharge Monitoring Reports for Mountain Coal Company's UPDES Permit Numbers UTG040003, UTG040004, UTG040005, UTG040014 and UTG040015. These reports are on the preprinted DMRs provided by the State of Utah, and cover the third quarter of 1991.

If you have any questions or need any additional information, please contact me.

Respectfully,

Dan W. Guy
Manager Permitting/Compliance

DWG/rs

Enclosures

Mountain Coal Company
Trail Mountain Mine
Post Office Box 1378
Price, Utah 84501
Telephone 801 637-5050 (Price Office)
801 637-5203 (Mine Office)
801 748-2140 (Mine Site)

October 31, 1991

Mr. Lowell Braxton, Administrator
Utah Division of Oil, Gas & Mining
355 West North Temple
3 Triad Center, Suite 350
Salt Lake City, Utah 84180-1203

Dear Mr. Braxton:

Enclosed please find Quarterly Discharge Monitoring Reports for Mountain Coal Company's UPDES Permit Numbers UTG040003, UTG040004, UTG040005, UTG040014 and UTG040015. These reports are on the preprinted DMRs provided by the State of Utah, and cover the third quarter of 1991.

If you have any questions or need any additional information, please contact me.

Respectfully,

Dan W. Guy
Manager Permitting/Compliance

DWG/rs

Enclosures

PERMITTEE N ADDRESS (Include Facility Name/I if different)

NAME BE R CREEK COAL--CV SPUR

ADDRESS P.O. BOX 1378

PRICE UT 84501

FACILITY

LOCATION

ATTN: DAN W. GUY, MANAGER

NATIONAL POLLU DISCHA DISCHARGE ELIMINATION SYSTEM (NPDES) MONITORING REPORT (DMR)

UTG040005 — PERMIT NUMBER

001 A — DISCHARGE NUMBER (17-19)

F - FINAL

SED PND OTFL-DRNG DTCH/PRC RVR

MONITORING PERIOD

	YEAR	MO	DAY		YEAR	MO	DAY
FROM	91	07	01	TO	91	07	31
	(20-21)	(22-23)	(24-25)		(26-27)	(28-29)	(30-31)

MINOR

NOTE: Read instructions before completing this form.

PARAMETER (32-37)		(3 Card Only) QUANTITY OR LOADING (46-53) AVERAGE	(54-61) MAXIMUM	UNITS	(4 Card Only) QUALITY OR CONCENTRATION (38-45) MINIMUM	(46-53) AVERAGE	(54-61) MAXIMUM	UNITS	NO. EX (62-63)	FREQUENCY OF ANALYSIS (64-68)	SAMPLE TYPE (69-70)
FLOW RATE	SAMPLE MEASUREMENT	NO	DISCHARGE		******	******	******				
00056 1 0 0 EFFLUENT GROSS VALUE	PERMIT REQUIREMENT	REPORT 30 DA AV	REPORT DAILY MX	GPD	******	******	******	**** ****		ONCE/ MONTH	MEASRD
PH	SAMPLE MEASUREMENT	******	******			******					
00400 1 0 0 EFFLUENT GROSS VALUE	PERMIT REQUIREMENT	******	******	**** ****	6.5 DAILY MN	******	9.0 DAILY MX	SU		TWICE/ MONTH	GRAB
SOLIDS, TOTAL SUSPENDED	SAMPLE MEASUREMENT	******	******		******						
00530 P 0 0 SEE COMMENTS BELOW	PERMIT REQUIREMENT	******	******	**** ****	******	25 30 DA AV	70 DAILY MX	MG/L		ONCE/ MONTH	GRAB
SOLIDS, SETTLEABLE	SAMPLE MEASUREMENT	******	******		******	******					
00545 R 0 0 SEE COMMENTS BELOW	PERMIT REQUIREMENT	******	******	**** ****	******	******	0.5 DAILY MX	ML/L		ONCE/ MONTH	GRAB
OIL AND GREASE FREON EXTR-GRAV METH	SAMPLE MEASUREMENT	******	******		******	******					
00556 1 0 0 EFFLUENT GROSS VALUE	PERMIT REQUIREMENT	******	******	**** ****	******	******	10 DAILY MX	MG/L		ONCE/ MONTH	GRAB
IRON, TOTAL (AS FE)	SAMPLE MEASUREMENT	******	******		******	******					
01045 1 0 0 EFFLUENT GROSS VALUE	PERMIT REQUIREMENT	******	******	**** ****	******	******	2.0 DAILY MX	MG/L		ONCE/ MONTH	GRAB
FLOATING SOLIDS OR VISIBLE FOAM-VISUAL	SAMPLE MEASUREMENT	******			******	******	******				
45613 1 0 0 EFFLUENT GROSS VALUE	PERMIT REQUIREMENT	******	0 DAILY MX	YES=1 NO=0	******	******	******	**** ****		ONCE/ MONTH	VISUAL

NAME/TITLE PRINCIPAL EXECUTIVE OFFICER

Dan W. Guy
Permitting & Compliance

TYPED OR PRINTED

I CERTIFY UNDER PENALTY OF LAW THAT I HAVE PERSONALLY EXAMINED AND AM FAMILIAR WITH THE INFORMATION SUBMITTED HEREIN, AND BASED ON MY INQUIRY OF THOSE INDIVIDUALS IMMEDIATELY RESPONSIBLE FOR OBTAINING THE INFORMATION, I BELIEVE THE SUBMITTED INFORMATION IS TRUE, ACCURATE AND COMPLETE. I AM AWARE THAT THERE ARE SIGNIFICANT PENALTIES FOR SUBMITTING FALSE INFORMATION, INCLUDING THE POSSIBILITY OF FINE AND IMPRISONMENT. SEE 18 USC § 1001 AND 33 USC § 1319. (Penalties under these statutes may include fines up to $10,000 and/or maximum imprisonment of between 6 months and 5 years.)

Dan W. Guy

SIGNATURE OF PRINCIPAL EXECUTIVE OFFICER OR AUTHORIZED AGENT

TELEPHONE		DATE		
801	637-5050	91	07	31
AREA CODE	NUMBER	YEAR	MO	DAY

COMMENT AND EXPLANATION OF ANY VIOLATIONS (Reference all attachments here)

TDS IS LIMITED TO ONE TON PER DAY FROM ALL OUTFALLS. DURING PRECIPITATION EVENTS, SETTLEABLE SOLIDS SHALL BE LIMITED INSTEAD OF TSS. REPORT "DOES NOT APPLY" IN THE APPROPRIATE ROW.

PERMITTEE N[illegible]/ADDRESS (Include Facility Name/L[illegible] if different)

NAME BI[illegible] CREEK COAL--CV SPUR

ADDRESS P.O. BOX 1378

PRICE UT 84501

FACILITY

LOCATION

ATTN: DAN W. GUY, MANAGER

NATIONAL POLLU[illegible] DISCHARGE ELIMINATION SYSTEM (NPDES)
DISCHA[illegible] MONITORING REPORT (DMR)

PERMIT NUMBER	DISCHARGE NUMBER
UTG040005	001 A

(17-19)

F - FINAL

SED PND OTFL-DRNG DTCH/PRC RVR

MONITORING PERIOD

	YEAR	MO	DAY		YEAR	MO	DAY
FROM	91	07	01	TO	91	07	31
	(20-21)	(22-23)	(24-25)		(26-27)	(28-29)	(30-31)

MINOR

NOTE: Read instructions before completing this form.

PARAMETER (32-37)		(3 Card Only) QUANTITY OR LOADING (46-53) AVERAGE	(54-61) MAXIMUM	UNITS	(4 Card Only) QUALITY OR CONCENTRATION (38-45) MINIMUM	(46-53) AVERAGE	(54-61) MAXIMUM	UNITS	NO. EX (62-63)	FREQUENCY OF ANALYSIS (64-68)	SAMPLE TYPE (69-70)
SANITARY WASTE DISCHARGED-ASSESSMNT 45614 1 0 0 EFFLUENT GROSS VALUE	SAMPLE MEASUREMENT	******			******	******	******				
	PERMIT REQUIREMENT	******	0 DAILY MX	YES=1 NO=0	******	******	******	**** ****		ONCE/ MONTH	VISUAL
SOLIDS, TOTAL DISSOLVED 70295 0 0 0 SEE COMMENTS BELOW	SAMPLE MEASUREMENT	******			******	******					
	PERMIT REQUIREMENT	******	2000 DAILY MX	LBS/DY	******	******	REPORT DAILY MX	MG/L		ONCE/ MONTH	GRAB
	SAMPLE MEASUREMENT										
	PERMIT REQUIREMENT										
	SAMPLE MEASUREMENT										
	PERMIT REQUIREMENT										
	SAMPLE MEASUREMENT										
	PERMIT REQUIREMENT										
	SAMPLE MEASUREMENT										
	PERMIT REQUIREMENT										
	SAMPLE MEASUREMENT										
	PERMIT REQUIREMENT										

NAME/TITLE PRINCIPAL EXECUTIVE OFFICER

Dan W. Guy
Permitting & Compliance

TYPED OR PRINTED

I CERTIFY UNDER PENALTY OF LAW THAT I HAVE PERSONALLY EXAMINED AND AM FAMILIAR WITH THE INFORMATION SUBMITTED HEREIN, AND BASED ON MY INQUIRY OF THOSE INDIVIDUALS IMMEDIATELY RESPONSIBLE FOR OBTAINING THE INFORMATION, I BELIEVE THE SUBMITTED INFORMATION IS TRUE, ACCURATE AND COMPLETE. I AM AWARE THAT THERE ARE SIGNIFICANT PENALTIES FOR SUBMITTING FALSE INFORMATION, INCLUDING THE POSSIBILITY OF FINE AND IMPRISONMENT. SEE 18 USC § 1001 AND 33 USC § 1319. *(Penalties under these statutes may include fines up to $10,000 and/or maximum imprisonment of between 6 months and 5 years.)*

Dan W. Guy

SIGNATURE OF PRINCIPAL EXECUTIVE OFFICER OR AUTHORIZED AGENT

TELEPHONE		DATE		
801	637-5050	91	07	31
AREA CODE	NUMBER	YEAR	MO	DAY

COMMENT AND EXPLANATION OF ANY VIOLATIONS (*Reference all attachments here*)

TDS IS LIMITED TO ONE TON PER DAY FROM ALL OUTFALLS. DURING PRECIPITATION EVENTS, SETTLEABLE SOLIDS SHALL BE LIMITED INSTEAD OF TSS. REPORT "DOES NOT APPLY" IN THE APPROPRIATE ROW.

PERMITTEE N ADDRESS (Include Facility Name/L if different)

NAME BE R CREEK COAL--CV SPUR

ADDRESS P.O. BOX 1378

PRICE UT 84501

FACILITY

LOCATION

ATTN: DAN W. GUY, MANAGER

NATIONAL POLLU DISCHA DISCHARGE ELIMINATION SYSTEM (NPDES) MONITORING REPORT (DMR)

UTG040005 — PERMIT NUMBER

001 A — DISCHARGE NUMBER (17-19)

F - FINAL

SED PND OTFL-DRNG DTCH/PRC RVR

MONITORING PERIOD

	YEAR	MO	DAY		YEAR	MO	DAY
FROM	91	08	01	TO	91	08	31
	(20-21)	(22-23)	(24-25)		(26-27)	(28-29)	(30-31)

MINOR

NOTE: Read instructions before completing this form.

PARAMETER (32-37)		(3 Card Only) QUANTITY OR LOADING (46-53) AVERAGE	(54-61) MAXIMUM	UNITS	(4 Card Only) QUALITY OR CONCENTRATION (38-45) MINIMUM	(46-53) AVERAGE	(54-61) MAXIMUM	UNITS	NO. EX (62-63)	FREQUENCY OF ANALYSIS (64-68)	SAMPLE TYPE (69-70)
FLOW RATE	SAMPLE MEASUREMENT	NO DISCHARGE			******	******	******				
00056 1 0 0 EFFLUENT GROSS VALUE	PERMIT REQUIREMENT	REPORT 30 DA AV	REPORT DAILY MX	GPD	******	******	******	**** ****		ONCE/ MONTH	MEASRD
PH	SAMPLE MEASUREMENT	******	******			******					
00400 1 0 0 EFFLUENT GROSS VALUE	PERMIT REQUIREMENT	******	******	**** ****	6.5 DAILY MN	******	9.0 DAILY MX	SU		TWICE/ MONTH	GRAB
SOLIDS, TOTAL SUSPENDED	SAMPLE MEASUREMENT	******	******		******						
00530 P 0 0 SEE COMMENTS BELOW	PERMIT REQUIREMENT	******	******	**** ****	******	25 30 DA AV	70 DAILY MX	MG/L		ONCE/ MONTH	GRAB
SOLIDS, SETTLEABLE	SAMPLE MEASUREMENT	******	******		******	******					
00545 R 0 0 SEE COMMENTS BELOW	PERMIT REQUIREMENT	******	******	**** ****	******	******	0.5 DAILY MX	ML/L		ONCE/ MONTH	GRAB
OIL AND GREASE FREON EXTR-GRAV METH	SAMPLE MEASUREMENT	******	******		******	******					
00556 1 0 0 EFFLUENT GROSS VALUE	PERMIT REQUIREMENT	******	******	**** ****	******	******	10 DAILY MX	MG/L		ONCE/ MONTH	GRAB
IRON, TOTAL (AS FE)	SAMPLE MEASUREMENT	******	******		******	******					
01045 1 0 0 EFFLUENT GROSS VALUE	PERMIT REQUIREMENT	******	******	**** ****	******	******	2.0 DAILY MX	MG/L		ONCE/ MONTH	GRAB
FLOATING SOLIDS OR VISIBLE FOAM-VISUAL	SAMPLE MEASUREMENT	******			******	******	******				
45613 1 0 0 EFFLUENT GROSS VALUE	PERMIT REQUIREMENT	******	0 DAILY MX	YES=1 NO=0	******	******	******	**** ****		ONCE/ MONTH	VISUAL

NAME/TITLE PRINCIPAL EXECUTIVE OFFICER

Dan W. Guy
Permitting & Compliance

TYPED OR PRINTED

I CERTIFY UNDER PENALTY OF LAW THAT I HAVE PERSONALLY EXAMINED AND AM FAMILIAR WITH THE INFORMATION SUBMITTED HEREIN, AND BASED ON MY INQUIRY OF THOSE INDIVIDUALS IMMEDIATELY RESPONSIBLE FOR OBTAINING THE INFORMATION, I BELIEVE THE SUBMITTED INFORMATION IS TRUE, ACCURATE AND COMPLETE. I AM AWARE THAT THERE ARE SIGNIFICANT PENALTIES FOR SUBMITTING FALSE INFORMATION, INCLUDING THE POSSIBILITY OF FINE AND IMPRISONMENT. SEE 18 USC § 1001 AND 33 USC § 1319. (Penalties under these statutes may include fines up to $10,000 and/or maximum imprisonment of between 6 months and 5 years.)

SIGNATURE OF PRINCIPAL EXECUTIVE OFFICER OR AUTHORIZED AGENT

TELEPHONE		DATE		
801	637-5050	91	08	31
AREA CODE	NUMBER	YEAR	MO	DAY

COMMENT AND EXPLANATION OF ANY VIOLATIONS (Reference all attachments here)

TDS IS LIMITED TO ONE TON PER DAY FROM ALL OUTFALLS. DURING PRECIPITATION EVENTS, SETTLEABLE SOLIDS SHALL BE LIMITED INSTEAD OF TSS. REPORT "DOES NOT APPLY" IN THE APPROPRIATE ROW.

PERMITTEE NAME/ADDRESS (Include Facility Name/Location if different)

NAME BE R CREEK COAL--CV SPUR

ADDRESS P.O. BOX 1378

PRICE UT 84501

FACILITY

LOCATION

ATTN: DAN W. GUY, MANAGER

NATIONAL POLLUTANT DISCHARGE ELIMINATION SYSTEM (NPDES)
DISCHARGE MONITORING REPORT (DMR)

UTG040005 — PERMIT NUMBER

001 A — DISCHARGE NUMBER (17-19)

F - FINAL

SED PND OTFL-DRNG DTCH/PRC RVR

MONITORING PERIOD

FROM YEAR	MO	DAY	TO YEAR	MO	DAY
91	08	01	91	08	31
(20-21)	(22-23)	(24-25)	(26-27)	(28-29)	(30-31)

MINOR

NOTE: Read instructions before completing this form.

PARAMETER (32-37)		(3 Card Only) QUANTITY OR LOADING (46-53) AVERAGE	(54-61) MAXIMUM	UNITS	(4 Card Only) QUALITY OR CONCENTRATION (38-45) MINIMUM	(46-53) AVERAGE	(54-61) MAXIMUM	UNITS	NO. EX (62-63)	FREQUENCY OF ANALYSIS (64-68)	SAMPLE TYPE (69-70)
SANITARY WASTE DISCHARGED-ASSESSMNT 45614 1 0 0 EFFLUENT GROSS VALUE	SAMPLE MEASUREMENT	******			******	******	******				
	PERMIT REQUIREMENT	******	0 DAILY MX	YES=1 NO=0	******	******	******	**** ****		ONCE/ MONTH	VISUAL
SOLIDS, TOTAL DISSOLVED 70295 0 0 0 SEE COMMENTS BELOW	SAMPLE MEASUREMENT	******			******	******					
	PERMIT REQUIREMENT	******	2000 DAILY MX	LBS/DY	******	******	REPORT DAILY MX	MG/L		ONCE/ MONTH	GRAB
	SAMPLE MEASUREMENT										
	PERMIT REQUIREMENT										
	SAMPLE MEASUREMENT										
	PERMIT REQUIREMENT										
	SAMPLE MEASUREMENT										
	PERMIT REQUIREMENT										
	SAMPLE MEASUREMENT										
	PERMIT REQUIREMENT										
	SAMPLE MEASUREMENT										
	PERMIT REQUIREMENT										

NAME/TITLE PRINCIPAL EXECUTIVE OFFICER

Dan W. Guy
Permitting & Compliance

TYPED OR PRINTED

I CERTIFY UNDER PENALTY OF LAW THAT I HAVE PERSONALLY EXAMINED AND AM FAMILIAR WITH THE INFORMATION SUBMITTED HEREIN AND BASED ON MY INQUIRY OF THOSE INDIVIDUALS IMMEDIATELY RESPONSIBLE FOR OBTAINING THE INFORMATION I BELIEVE THE SUBMITTED INFORMATION IS TRUE ACCURATE AND COMPLETE I AM AWARE THAT THERE ARE SIGNIFICANT PENALTIES FOR SUBMITTING FALSE INFORMATION INCLUDING THE POSSIBILITY OF FINE AND IMPRISONMENT SEE 18 USC § 1001 AND 33 USC § 1319 (Penalties under these statutes may include fines up to $10,000 and or maximum imprisonment of between 6 months and 5 years.)

SIGNATURE OF PRINCIPAL EXECUTIVE OFFICER OR AUTHORIZED AGENT

TELEPHONE AREA CODE	NUMBER	DATE YEAR	MO	DAY
801	637-5050	91	08	31

COMMENT AND EXPLANATION OF ANY VIOLATIONS (Reference all attachments here)

TDS IS LIMITED TO ONE TON PER DAY FROM ALL OUTFALLS. DURING PRECIPITATION EVENTS, SETTLEABLE SOLIDS SHALL BE LIMITED INSTEAD OF TSS. REPORT "DOES NOT APPLY" IN THE APPROPRIATE ROW.

PERMITTEE NAME/ADDRESS (Include Facility Name/Location if different)

NAME BE R CREEK COAL--CV SPUR

ADDRESS P.O. BOX 1378

PRICE UT 84501

FACILITY

LOCATION

ATTN: DAN W. GUY, MANAGER

NATIONAL POLLUTANT DISCHARGE ELIMINATION SYSTEM (NPDES)
MONITORING REPORT (DMR)

UT0040005 — PERMIT NUMBER

001 A — DISCHARGE NUMBER (17-19)

F - FINAL

SED PND OTFL-DRNG DTCH/PRC RVR

MONITORING PERIOD	YEAR	MO	DAY		YEAR	MO	DAY
FROM	91	09	01	TO	91	09	30
	(20-21)	(22-23)	(24-25)		(26-27)	(28-29)	(30-31)

MINOR

NOTE: Read instructions before completing this form.

PARAMETER (32-37)		(3 Card Only) QUANTITY OR LOADING (46-53) AVERAGE	(54-61) MAXIMUM	UNITS	(4 Card Only) QUALITY OR CONCENTRATION (38-45) MINIMUM	(46-53) AVERAGE	(54-61) MAXIMUM	UNITS	NO. EX (62-63)	FREQUENCY OF ANALYSIS (64-68)	SAMPLE TYPE (69-70)
FLOW RATE	SAMPLE MEASUREMENT	NO DISCHARGE			******	******	******				
00056 1 0 0 EFFLUENT GROSS VALUE	PERMIT REQUIREMENT	REPORT 30 DA AV	REPORT DAILY MX	GPD	******	******	******	**** ****		ONCE/ MONTH	MEASRD
PH	SAMPLE MEASUREMENT	******	******			******					
00400 1 0 0 EFFLUENT GROSS VALUE	PERMIT REQUIREMENT	******	******	**** ****	6.5 DAILY MN	******	9.0 DAILY MX	SU		TWICE/ MONTH	GRAB
SOLIDS, TOTAL SUSPENDED	SAMPLE MEASUREMENT	******	******		******						
00530 P 0 0 SEE COMMENTS BELOW	PERMIT REQUIREMENT	******	******	**** ****	******	25 30 DA AV	70 DAILY MX	MG/L		ONCE/ MONTH	GRAB
SOLIDS, SETTLEABLE	SAMPLE MEASUREMENT	******	******		******	******					
00545 R 0 0 SEE COMMENTS BELOW	PERMIT REQUIREMENT	******	******	**** ****	******	******	0.5 DAILY MX	ML/L		ONCE/ MONTH	GRAB
OIL AND GREASE FREON EXTR-GRAV METH	SAMPLE MEASUREMENT	******	******		******	******					
00556 1 0 0 EFFLUENT GROSS VALUE	PERMIT REQUIREMENT	******	******	**** ****	******	******	10 DAILY MX	MG/L		ONCE/ MONTH	GRAB
IRON, TOTAL (AS FE)	SAMPLE MEASUREMENT	******	******		******	******					
01045 1 0 0 EFFLUENT GROSS VALUE	PERMIT REQUIREMENT	******	******	**** ****	******	******	2.0 DAILY MX	MG/L		ONCE/ MONTH	GRAB
FLOATING SOLIDS OR VISIBLE FOAM-VISUAL	SAMPLE MEASUREMENT	******			******	******	******				
45613 1 0 0 EFFLUENT GROSS VALUE	PERMIT REQUIREMENT	******	0 DAILY MX	YES=1 NO=0	******	******	******	**** ****		ONCE/ MONTH	VISUAL

NAME/TITLE PRINCIPAL EXECUTIVE OFFICER

Dan W. Guy
Permitting & Compliance

TYPED OR PRINTED

I CERTIFY UNDER PENALTY OF LAW THAT I HAVE PERSONALLY EXAMINED AND AM FAMILIAR WITH THE INFORMATION SUBMITTED HEREIN, AND BASED ON MY INQUIRY OF THOSE INDIVIDUALS IMMEDIATELY RESPONSIBLE FOR OBTAINING THE INFORMATION, I BELIEVE THE SUBMITTED INFORMATION IS TRUE, ACCURATE AND COMPLETE. I AM AWARE THAT THERE ARE SIGNIFICANT PENALTIES FOR SUBMITTING FALSE INFORMATION, INCLUDING THE POSSIBILITY OF FINE AND IMPRISONMENT. SEE 18 USC § 1001 AND 33 USC § 1319 (*Penalties under these statutes may include fines up to $10,000 and/or maximum imprisonment of between 6 months and 5 years.*)

Dan W. Guy

SIGNATURE OF PRINCIPAL EXECUTIVE OFFICER OR AUTHORIZED AGENT

TELEPHONE		DATE		
801	637-5050	91	09	30
AREA CODE	NUMBER	YEAR	MO	DAY

COMMENT AND EXPLANATION OF ANY VIOLATIONS (*Reference all attachments here*)

TDS IS LIMITED TO ONE TON PER DAY FROM ALL OUTFALLS. DURING PRECIPITATION EVENTS, SETTLEABLE SOLIDS SHALL BE LIMITED INSTEAD OF TSS. REPORT "DOES NOT APPLY" IN THE APPROPRIATE ROW.

PERMITTEE NAME/ADDRESS (Include Facility Name/Location if different)

NAME BE B CREEK COAL--CV SPUR

ADDRESS P.O. BOX 1378

PRICE UT 84501

FACILITY

LOCATION

ATTN: DAN W. GUY, MANAGER

NATIONAL POLLUTANT DISCHARGE ELIMINATION SYSTEM (NPDES) MONITORING REPORT (DMR)

(2) UTG040005 PERMIT NUMBER

(17-19) 001 A DISCHARGE NUMBER

P - FINAL

SED PND OTFL-DRNG DTCH/PRC RVR

MONITORING PERIOD

FROM YEAR	MO	DAY	TO YEAR	MO	DAY
91	09	01	91	09	30
(20-21)	(22-23)	(24-25)	(26-27)	(28-29)	(30-31)

MINOR

NOTE: Read instructions before completing this form.

PARAMETER (32-37)		(3 Card Only) QUANTITY OR LOADING (46-53) AVERAGE	(54-61) MAXIMUM	UNITS	(4 Card Only) QUALITY OR CONCENTRATION (38-45) MINIMUM	(46-53) AVERAGE	(54-61) MAXIMUM	UNITS	NO. EX (62-63)	FREQUENCY OF ANALYSIS (64-68)	SAMPLE TYPE (69-70)
SANITARY WASTE DISCHARGED-ASSESSMENT 45614 1 0 0 EFFLUENT GROSS VALUE	SAMPLE MEASUREMENT	******			******	******	******				
	PERMIT REQUIREMENT	******	0 DAILY MX	YES=1 NO=0	******	******	******	**** ****		ONCE/ MONTH	VISUAL
SOLIDS, TOTAL DISSOLVED 70295 0 0 0 SEE COMMENTS BELOW	SAMPLE MEASUREMENT	******			******	******					
	PERMIT REQUIREMENT	******	2000 DAILY MX	LBS/DY	******	******	REPORT DAILY MX	MG/L		ONCE/ MONTH	GRAB
	SAMPLE MEASUREMENT										
	PERMIT REQUIREMENT										
	SAMPLE MEASUREMENT										
	PERMIT REQUIREMENT										
	SAMPLE MEASUREMENT										
	PERMIT REQUIREMENT										
	SAMPLE MEASUREMENT										
	PERMIT REQUIREMENT										
	SAMPLE MEASUREMENT										
	PERMIT REQUIREMENT										

NAME/TITLE PRINCIPAL EXECUTIVE OFFICER

Dan W. Guy
Permitting & Compliance

TYPED OR PRINTED

I CERTIFY UNDER PENALTY OF LAW THAT I HAVE PERSONALLY EXAMINED AND AM FAMILIAR WITH THE INFORMATION SUBMITTED HEREIN, AND BASED ON MY INQUIRY OF THOSE INDIVIDUALS IMMEDIATELY RESPONSIBLE FOR OBTAINING THE INFORMATION, I BELIEVE THE SUBMITTED INFORMATION IS TRUE, ACCURATE AND COMPLETE. I AM AWARE THAT THERE ARE SIGNIFICANT PENALTIES FOR SUBMITTING FALSE INFORMATION, INCLUDING THE POSSIBILITY OF FINE AND IMPRISONMENT. SEE 18 USC § 1001 AND 33 USC § 1319. (Penalties under these statutes may include fines up to $10,000 and/or maximum imprisonment of between 6 months and 5 years.)

Dan W. Guy

SIGNATURE OF PRINCIPAL EXECUTIVE OFFICER OR AUTHORIZED AGENT

TELEPHONE: AREA CODE 801 NUMBER 637-5050

DATE: YEAR 91 MO 09 DAY 30

COMMENT AND EXPLANATION OF ANY VIOLATIONS (Reference all attachments here)

TDS IS LIMITED TO ONE TON PER DAY FROM ALL OUTFALLS. DURING PRECIPITATION EVENTS, SETTLEABLE SOLIDS SHALL BE LIMITED INSTEAD OF TSS. REPORT "DOES NOT APPLY" IN THE APPROPRIATE ROW.

Mountain Coal Company
Trail Mountain Mine
Post Office Box 1378
Price, Utah 84501
Telephone 801 637-5050 (Price Office)
801 637-5203 (Mine Office)
801 748-2140 (Mine Site)

July 31, 1991

Donald A. Hilden, Ph.D., Chief
Permits and Compliance Section
Bureau of Water Pollution Control
Utah Division of Environmental Health
288 North 1460 West
P.O. Box 16690
Salt Lake City, Utah 84116-0690

Dear Mr. Hilden:

Enclosed please find Quarterly Discharge Monitoring Reports for Mountain Coal Co., Trail Mountain Mine's UPDES Permit Numbers UTG040003, UTG040004, and UTG040005. These reports are on the preprinted DMRs provided by the State of Utah, and cover the second quarter of 1991.

If you have any questions or need any additional information, please contact me.

Respectfully,

Dan W. Guy

Dan W. Guy
Mgr. Permitting/Compliance

DWG/pd

Enclosures

cc: Donna Franklin, E.P.A.
Lowell Braxton, UDOGM
File

Mountain Coal Company
Trail Mountain Mine
Post Office Box 1378
Price, Utah 84501
Telephone 801 637-5050 (Price Office)
801 637-5203 (Mine Office)
801 748-2140 (Mine Site)

July 31, 1991

Mr. Lowell Braxton, Administrator
Utah Division of Oil, Gas & Mining
355 West North Temple
3 Triad Center, Suite 350
Salt Lake City, Utah 84180-1203

Dear Mr. Braxton:

Enclosed please find Quarterly Discharge Monitoring Reports for Mountain Coal Co., Trail Mountain Mine's UPDES Permit Numbers UTG040003, UTG040004, and UTG040005. These reports are on the preprinted DMRs provided by the State of Utah, and cover the second quarter of 1991.

If you have any questions or need any additional information, please contact me.

Respectfully,

Dan W. Guy
Mgr. Permitting/Compliance

DWG/pd

Enclosures

Mountain Coal Company
Trail Mountain Mine
Post Office Box 1378
Price, Utah 84501
Telephone 801 637-5050 (Price Office)
801 637-5203 (Mine Office)
801 748-2140 (Mine Site)

July 31, 1991

Ms. Donna Franklin
U.S.E.P.A., Region VIII
999 18th Street
Denver, Place - Suite 500 WM-C
Denver, CO 80202-2405

Dear Ms. Franklin:

Enclosed please find Quarterly Discharge Monitoring Reports for Mountain Coal Co., Trail Mountain Mine's UPDES Permit Numbers UTG040003, UTG040004, and UTG040005. These reports are on the preprinted DMRs provided by the State of Utah, and cover the second quarter of 1991.

If you have any questions or need any additional information, please contact me.

Respectfully,

Dan W. Guy
Mgr. Permitting/Compliance

DWG/pd

Enclosures

File 4-E-2-1

PERMITTEE NAME / ADDRESS (Include Facility Name/Location, if different)

NAME: PIERRE CREEK COAL--CV BRMR

ADDRESS: P.O. BOX 1375

PRICE UT 84501

FACILITY

LOCATION

NATIONAL POLLUTANT DISCHARGE ELIMINATION SYSTEM (NPDES) MONITORING REPORT (DMR)

PERMIT NUMBER (2-16): UT0024085

DISCHARGE NUMBER (17-19): 001 A

MONITORING PERIOD

	YEAR	MO	DAY		YEAR	MO	DAY
FROM	91	04	01	TO	91	04	30
	(20-21)	(22-23)	(24-25)		(26-27)	(28-29)	(30-31)

NOTE: Read instructions before completing this form.

ATTN: DAN W. GUY, MANAGER

PARAMETER (32-37)		(3 Card Only) QUANTITY OR LOADING (46-53) AVERAGE	(54-61) MAXIMUM	UNITS	(4 Card Only) QUALITY OR CONCENTRATION (38-45) MINIMUM	(46-53) AVERAGE	(54-61) MAXIMUM	UNITS	NO. EX (62-63)	FREQUENCY OF ANALYSIS (64-68)	SAMPLE TYPE (69-70)
FLOW RATE 00056 1 0 0 EFFLUENT GROSS VALUE	SAMPLE MEASUREMENT	NO FLOW			******	******	******				
	PERMIT REQUIREMENT	REPORT 30 DA AV	REPORT DAILY MX	GPD	******	******	******	**** ****		ONCE/ MONTH	MEASRD
PH 00400 1 0 0 EFFLUENT GROSS VALUE	SAMPLE MEASUREMENT	******	******			******					
	PERMIT REQUIREMENT	******	******	**** ****	6.5 DAILY MN	******	9.0 DAILY MX	SU		TWICE/ MONTH	GRAB
SOLIDS, TOTAL SUSPENDED 00530 P 0 0 SEE COMMENTS BELOW	SAMPLE MEASUREMENT	******	******		******						
	PERMIT REQUIREMENT	******	******	**** ****	******	25 30 DA AV	70 DAILY MX	MG/L		ONCE/ MONTH	GRAB
SOLIDS, SETTLEABLE 00545 P 0 0 SEE COMMENTS BELOW	SAMPLE MEASUREMENT	******	******		******	******					
	PERMIT REQUIREMENT	******	******	**** ****	******	******	0.5 DAILY MX	ML/L		ONCE/ MONTH	GRAB
OIL AND GREASE FROM EXTR-GRAV METH 00556 1 0 0 EFFLUENT GROSS VALUE	SAMPLE MEASUREMENT	******	******		******	******					
	PERMIT REQUIREMENT	******	******	**** ****	******	******	10 DAILY MX	MG/L		ONCE/ MONTH	GRAB
IRON, TOTAL (AS FE) 01045 1 0 0 EFFLUENT GROSS VALUE	SAMPLE MEASUREMENT	******	******		******	******					
	PERMIT REQUIREMENT	******	******	**** ****	******	******	2.0 DAILY MX	MG/L		ONCE/ MONTH	GRAB
FLOATING SOLIDS OR VISIBLE FOAM-VISUAL 45613 1 0 0 EFFLUENT GROSS VALUE	SAMPLE MEASUREMENT	******			******	******	******				
	PERMIT REQUIREMENT	******	0 DAILY MX	YES=1 NO=0	******	******	******	**** ****		ONCE/ MONTH	VISUAL

NAME/TITLE PRINCIPAL EXECUTIVE OFFICER

TYPED OR PRINTED

I CERTIFY UNDER PENALTY OF LAW THAT I HAVE PERSONALLY EXAMINED AND AM FAMILIAR WITH THE INFORMATION SUBMITTED HEREIN AND BASED ON MY INQUIRY OF THOSE INDIVIDUALS IMMEDIATELY RESPONSIBLE FOR OBTAINING THE INFORMATION. I BELIEVE THE SUBMITTED INFORMATION IS TRUE ACCURATE AND COMPLETE. I AM AWARE THAT THERE ARE SIGNIFICANT PENALTIES FOR SUBMITTING FALSE INFORMATION INCLUDING THE POSSIBILITY OF FINE AND IMPRISONMENT. SEE 18 USC § 1001 AND 33 USC § 1319 (Penalties under these statutes may include fines up to $10,000 and/or maximum imprisonment of between 6 months and 5 years.)

SIGNATURE OF PRINCIPAL EXECUTIVE OFFICER OR AUTHORIZED AGENT

TELEPHONE: AREA CODE / NUMBER

DATE: YEAR 91 MO 07 DAY 31

COMMENT AND EXPLANATION OF ANY VIOLATIONS (Reference all attachments here)

THIS IS LIMITED TO ONE TOP PER DAY FROM ALL OUTFALLS. DURING PRECIPITATION EVENTS, SETTLEABLE SOLIDS SHALL BE LIMITED INSTEAD OF TSS. REPORT "NOT APPLY" IN THE APPROPRIATE BOX.

PERMITTEE NAME/ADDRESS (Include Facility Name/Location if different)

NAME BEAV CREEK COAL--CV SPTR

ADDRESS P.O. BOX 1372

PRICE UT 84501

FACILITY

LOCATION

ATTN: DAN W. GUY, MANAGER

NATIONAL POLLUTANT DISCHARGE ELIMINATION SYSTEM (NPDES)

DISCHARGE MONITORING REPORT (DMR)

(2-16)	(17-19)
UT[illegible]	001 A
PERMIT NUMBER	DISCHARGE NUMBER

F - FINAL

[illegible]

MONITORING PERIOD

FROM YEAR	MO	DAY	TO YEAR	MO	DAY
91	04	01	91	04	30
(20-21)	(22-23)	(24-25)	(26-27)	(28-29)	(30-31)

MINOR

NOTE: Read instructions before completing this form.

PARAMETER (32-37)		(3 Card Only) QUANTITY OR LOADING (46-53) AVERAGE	(54-61) MAXIMUM	UNITS	(4 Card Only) QUALITY OR CONCENTRATION (38-45) MINIMUM	(46-53) AVERAGE	(54-61) MAXIMUM	UNITS	NO. EX (62-63)	FREQUENCY OF ANALYSIS (64-68)	SAMPLE TYPE (69-70)
SANITARY WASTE DISCHARGED-ASSESSMNT 45614 1 0 0 EFFLUENT GROSS VALUE	SAMPLE MEASUREMENT	******			******	******	******				
	PERMIT REQUIREMENT	******	0 DAILY MX	YES=1 NO=0	******	******	******	**** ****		ONCE/ MONTH	VISUAL
SOLIDS, TOTAL DISSOLVED 70295 0 0 0 SEE COMMENTS BELOW	SAMPLE MEASUREMENT	******			******	******					
	PERMIT REQUIREMENT	******	2000 DAILY MX	LBS/DY	******	******	REPORT DAILY MX	MG/L		ONCE/ MONTH	GRAB
	SAMPLE MEASUREMENT										
	PERMIT REQUIREMENT										
	SAMPLE MEASUREMENT										
	PERMIT REQUIREMENT										
	SAMPLE MEASUREMENT										
	PERMIT REQUIREMENT										
	SAMPLE MEASUREMENT										
	PERMIT REQUIREMENT										
	SAMPLE MEASUREMENT										
	PERMIT REQUIREMENT										

NAME/TITLE PRINCIPAL EXECUTIVE OFFICER

Dan W. Guy
Manager/ P & C

TYPED OR PRINTED

I CERTIFY UNDER PENALTY OF LAW THAT I HAVE PERSONALLY EXAMINED AND AM FAMILIAR WITH THE INFORMATION SUBMITTED HEREIN AND BASED ON MY INQUIRY OF THOSE INDIVIDUALS IMMEDIATELY RESPONSIBLE FOR OBTAINING THE INFORMATION I BELIEVE THE SUBMITTED INFORMATION IS TRUE ACCURATE AND COMPLETE I AM AWARE THAT THERE ARE SIGNIFICANT PENALTIES FOR SUBMITTING FALSE INFORMATION INCLUDING THE POSSIBILITY OF FINE AND IMPRISONMENT SEE 18 USC § 1001 AND 33 USC § 1319 (Penalties under these statutes may include fines up to $10,000 and/or maximum imprisonment of between 6 months and 5 years.)

Dan W. Guy

SIGNATURE OF PRINCIPAL EXECUTIVE OFFICER OR AUTHORIZED AGENT

TELEPHONE		DATE		
801	637-5050	91	07	31
AREA CODE	NUMBER	YEAR	MO	DAY

COMMENT AND EXPLANATION OF ANY VIOLATIONS (Reference all attachments here)

THIS IS LIMITED TO ONE TON PER DAY FROM ALL OUTFALLS. DURING PRECIPITATION EVENTS, SETTLEABLE SOLIDS SHALL BE LIMITED INSTEAD OF TSS. REPORT "DOES NOT APPLY" IN THE APPROPRIATE BOX.

EPA Form 3320-1 (Rev. 9-88) Previous editions may be used. (REPLACES EPA FORM T-40 WHICH MAY NOT BE USED.)

00044/[illegible]-1638

PERMITTEE NAME/ADDRESS (Include Facility Name/Loc[illegible] if different)

NAME BE[illegible] CREEK COAL--CV SPUR

ADDRESS P.O. BOX 1379

PRICE UT 84501

FACILITY

LOCATION

ATTN: DAN W. GUY, MANAGER

NATIONAL POLLUTA[illegible] DISCHARGE ELIMINATION SYSTEM (NPDES)

DISCHAR[illegible] MONITORING REPORT (DMR)

(2[illegible] (17-19)

UTG040005 — PERMIT NUMBER

001 A — DISCHARGE NUMBER

F - FINAL

SED PND OTFL-DRNG DTCH/PRC RVR

MONITORING PERIOD

FROM YEAR	MO	DAY	TO YEAR	MO	DAY
91	05	01	91	0[illegible]	31
(20-21)	(22-23)	(24-25)	(26-27)	(28-29)	(30-31)

MINOR

NOTE: Read instructions before completing this form.

PARAMETER (32-37)		(3 Card Only) QUANTITY OR LOADING (46-53) AVERAGE	(54-61) MAXIMUM	UNITS	(4 Card Only) QUALITY OR CONCENTRATION (38-45) MINIMUM	(46-53) AVERAGE	(54-61) MAXIMUM	UNITS	NO. EX (62-63)	FREQUENCY OF ANALYSIS (64-68)	SAMPLE TYPE (69-70)
FLOW RATE	SAMPLE MEASUREMENT	NO FLOW			******	******	******				
00056 1 0 0 EFFLUENT GROSS VALUE	PERMIT REQUIREMENT	REPORT 30 DA AV	REPORT DAILY MX	GPD	******	******	******	**** ****		ONCE/ MONTH	MEASRD
PH	SAMPLE MEASUREMENT	******	******			******					
00400 1 0 0 EFFLUENT GROSS VALUE	PERMIT REQUIREMENT	******	******	**** ****	6.5 DAILY MN	******	9.0 DAILY MX	SU		TWICE/ MONTH	GRAB
SOLIDS, TOTAL SUSPENDED	SAMPLE MEASUREMENT	******	******		******						
00530 P 0 0 SEE COMMENTS BELOW	PERMIT REQUIREMENT	******	******	**** ****	******	25 30 DA AV	70 DAILY MX	MG/L		ONCE/ MONTH	GRAB
SOLIDS, SETTLEABLE	SAMPLE MEASUREMENT	******	******		******	******					
00545 P 0 0 SEE COMMENTS BELOW	PERMIT REQUIREMENT	******	******	**** ****	******	******	0.5 DAILY MX	ML/L		ONCE/ MONTH	GRAB
OIL AND GREASE FREON EXTR-GRAV METH	SAMPLE MEASUREMENT	******	******		******	******					
00556 1 0 0 EFFLUENT GROSS VALUE	PERMIT REQUIREMENT	******	******	**** ****	******	******	10 DAILY MX	MG/L		ONCE/ MONTH	GRAB
IRON, TOTAL (AS FE)	SAMPLE MEASUREMENT	******	******		******	******					
01045 1 0 0 EFFLUENT GROSS VALUE	PERMIT REQUIREMENT	******	******	**** ****	******	******	2.0 DAILY MX	MG/L		ONCE/ MONTH	GRAB
FLOATING SOLIDS OR VISIBLE FOAM-VISUAL	SAMPLE MEASUREMENT	******			******	******	******				
45613 1 0 0 EFFLUENT GROSS VALUE	PERMIT REQUIREMENT	******	0 DAILY MX	YES=1 NO=0	******	******	******	**** ****		ONCE/ MONTH	VISUAL

NAME/TITLE PRINCIPAL EXECUTIVE OFFICER

TYPED OR PRINTED

I CERTIFY UNDER PENALTY OF LAW THAT I HAVE PERSONALLY EXAMINED AND AM FAMILIAR WITH THE INFORMATION SUBMITTED HEREIN AND BASED ON MY INQUIRY OF THOSE INDIVIDUALS IMMEDIATELY RESPONSIBLE FOR OBTAINING THE INFORMATION. I BELIEVE THE SUBMITTED INFORMATION IS TRUE, ACCURATE AND COMPLETE. I AM AWARE THAT THERE ARE SIGNIFICANT PENALTIES FOR SUBMITTING FALSE INFORMATION, INCLUDING THE POSSIBILITY OF FINE AND IMPRISONMENT. SEE 18 USC § 1001 AND 33 USC § 1319. (Penalties under these statutes may include fines up to $10,000 and/or maximum imprisonment of between 6 months and 5 years.)

Dan W. Guy

SIGNATURE OF PRINCIPAL EXECUTIVE OFFICER OR AUTHORIZED AGENT

TELEPHONE: AREA CODE | NUMBER

DATE: YEAR 91 | MO 07 | DAY 31

COMMENT AND EXPLANATION OF ANY VIOLATIONS (Reference all attachments here)

TDS IS LIMITED TO ONE TON PER DAY FROM ALL OUTFALLS. DURING PRECIPITATION EVENTS, SETTLEABLE SOLIDS SHALL BE LIMITED INSTEAD OF TSS. REPORT "DOES NOT APPLY" IN THE APPROPRIATE BOX.

EPA Form 3320-1 (Rev. 9-88) Previous editions may be used. (REPLACES EPA FORM T-40 WHICH MAY NOT BE USED.)

00045/060889-1638

PERMITTEE NAME/ADDRESS (Include Facility Name/Location if different)
N. BELNER CARBO COAL--DV SPRS
ADDRESS P.O. BOX 1378
PRICE UT 84501

FACILITY

LOCATION

ATTN: DAN W. GUY, MANAGER

NATIONAL POLLUTANT DISCHARGE ELIMINATION SYSTEM (NPDES)
CHARGE MONITORING REPORT (DMR)

(2-16) PERMIT NUMBER: UT0025025

(17-19) DISCHARGE NUMBER: 001

C - FINAL
SPR PRD STEL-WAS STP 1/2

MONITORING PERIOD

	YEAR	MO	DAY		YEAR	MO	DAY
FROM	91	11	01	TO	91	11	01
	(20-21)	(22-23)	(24-25)		(26-27)	(28-29)	(30-31)

MINOR

NOTE: Read instructions before completing t

PARAMETER (32-37)		(3 Card Only) (46-53) QUANTITY OR LOADING (54-61) AVERAGE	MAXIMUM	UNITS	(4 Card Only) (38-45) QUALITY OR CONCENTRATION (46-53) MINIMUM	AVERAGE	(54-61) MAXIMUM	UNITS	NO. EX (62-63)	FREQUENCY OF ANALYSIS (64-68)
FLOW RATE	SAMPLE MEASUREMENT	NO FLOW			******	******	******			
00056 1 0 0 EFFLUENT GROSS VALUE	PERMIT REQUIREMENT	REPORT 30 DA AV	REPORT DAILY MX	GPD	******	******	******	**** ****	0	ONCE/MONT
PH	SAMPLE MEASUREMENT	******	******			******				
00400 1 0 0 EFFLUENT GROSS VALUE	PERMIT REQUIREMENT	******	******	**** ****	6.5 DAILY MN	******	9.0 DAILY MX	SU		TWICE MONT
SOLIDS, TOTAL SUSPENDED	SAMPLE MEASUREMENT	******	******		******					
00530 1 0 0 SEE COMMENTS BELOW	PERMIT REQUIREMENT	******	******	**** ****	******	25 30 DA AV	70 DAILY MX	MG/L	0	ONCE/MONT
SOLIDS, SETTLEABLE	SAMPLE MEASUREMENT	******	******		******	******				
00545 1 0 0 SEE COMMENTS BELOW	PERMIT REQUIREMENT	******	******	**** ****	******	******	0.5 DAILY MX	ML/L	0	ONCE/MONT
OIL AND GREASE FREON EXTR-GRAV METH	SAMPLE MEASUREMENT	******	******		******	******				
00556 1 0 0 EFFLUENT GROSS VALUE	PERMIT REQUIREMENT	******	******	**** ****	******	******	10 DAILY MX	MG/L	0	ONCE/MONT
IRON, TOTAL (AS FE)	SAMPLE MEASUREMENT	******	******		******	******				
01045 1 0 0 EFFLUENT GROSS VALUE	PERMIT REQUIREMENT	******	******	**** ****	******	******	2.0 DAILY MX	MG/L	0	ONCE/MONT
FLOATING SOLIDS OR VISIBLE FOAM-VISUAL	SAMPLE MEASUREMENT	******			******	******	******			
45613 1 0 0 EFFLUENT GROSS VALUE	PERMIT REQUIREMENT	******	0 DAILY MX	YES=1 NO=0	******	******	******	**** ****	0	ONCE/MONT

NAME/TITLE PRINCIPAL EXECUTIVE OFFICER

TYPED OR PRINTED

I CERTIFY UNDER PENALTY OF LAW THAT I HAVE PERSONALLY EXAMINED AND AM FAMILIAR WITH THE INFORMATION SUBMITTED HEREIN AND BASED ON MY INQUIRY OF THOSE INDIVIDUALS IMMEDIATELY RESPONSIBLE FOR OBTAINING THE INFORMATION. I BELIEVE THE SUBMITTED INFORMATION IS TRUE ACCURATE AND COMPLETE. I AM AWARE THAT THERE ARE SIGNIFICANT PENALTIES FOR SUBMITTING FALSE INFORMATION INCLUDING THE POSSIBILITY OF FINE AND IMPRISONMENT. SEE 18 USC § 1001 AND 33 USC § 1319 (Penalties under these statutes may include fines up to $10,000 and/or maximum imprisonment of between 6 months and 5 years.)

Dan W. Guy
SIGNATURE OF PRINCIPAL EXECUTIVE OFFICER OR AUTHORIZED AGENT

TELEPHONE: AREA CODE | NUMBER | YEAR 91

COMMENT AND EXPLANATION OF ANY VIOLATIONS (Reference all attachments here)

TDS IS LIMITED TO ONE TON PER DAY FROM ALL OUTFALLS. DURING PRECIPITATION EVENTS, SETTLEABLE SOL SHALL BE LIMITED INSTEAD OF TSS. REPORT MODES NOT APPLY IN THE APPROPRIATE BOX.

PERMITTEE NAME AND ADDRESS (Include Facility Name/Location if different)

NAME BELL CREEK COAL--CV BRUB

ADDRESS P.O. BOX 1378

PRICE UT 84501

FACILITY

LOCATION

ATTN: DAN W. GUY, MANAGER

NATIONAL POLLUTANT DISCHARGE ELIMINATION SYSTEM (NPDES) DISCHARGE MONITORING REPORT (DMR)

(2-16) UT0040006 PERMIT NUMBER

(17-19) 001 A DISCHARGE NUMBER

P - FINAL

SEE PMP BELL-BRNC DRCM/PRI RVS

MONITORING PERIOD

FROM YEAR	MO	DAY	TO YEAR	MO	DAY
91	05	01	91	05	31
(20-21)	(22-23)	(24-25)	(26-27)	(28-29)	(30-31)

MINOR

NOTE: Read instructions before completing this form.

PARAMETER (32-37)		(3 Card Only) QUANTITY OR LOADING (46-53) AVERAGE	(54-61) MAXIMUM	UNITS	(4 Card Only) QUALITY OR CONCENTRATION (38-45) MINIMUM	(46-53) AVERAGE	(54-61) MAXIMUM	UNITS	NO. EX (62-63)	FREQUENCY OF ANALYSIS (64-68)	SAMPLE TYPE (69-70)
SANITARY WASTE DISCHARGED-ASSESSMNT 35514 1 0 0 EFFLUENT GROSS VALUE	SAMPLE MEASUREMENT	******			******	******	******				
	PERMIT REQUIREMENT	******	0 DAILY MX	YES=1 NO=0	******	******	******	**** ****	0	ONCE/ MONTH	VISUAL
SOLIDS, TOTAL DISSOLVED 70295 0 0 0 SEE COMMENTS BELOW	SAMPLE MEASUREMENT	******			******	******					
	PERMIT REQUIREMENT	******	2000 DAILY MX	LBS/DY	******	******	REPORT DAILY MX	MG/L	0	ONCE/ MONTH	GRAB
	SAMPLE MEASUREMENT										
	PERMIT REQUIREMENT										
	SAMPLE MEASUREMENT										
	PERMIT REQUIREMENT										
	SAMPLE MEASUREMENT										
	PERMIT REQUIREMENT										
	SAMPLE MEASUREMENT										
	PERMIT REQUIREMENT										
	SAMPLE MEASUREMENT										
	PERMIT REQUIREMENT										

NAME/TITLE PRINCIPAL EXECUTIVE OFFICER

Dan W. Guy
Manager, P & C

TYPED OR PRINTED

I CERTIFY UNDER PENALTY OF LAW THAT I HAVE PERSONALLY EXAMINED AND AM FAMILIAR WITH THE INFORMATION SUBMITTED HEREIN AND BASED ON MY INQUIRY OF THOSE INDIVIDUALS IMMEDIATELY RESPONSIBLE FOR OBTAINING THE INFORMATION, I BELIEVE THE SUBMITTED INFORMATION IS TRUE, ACCURATE AND COMPLETE. I AM AWARE THAT THERE ARE SIGNIFICANT PENALTIES FOR SUBMITTING FALSE INFORMATION, INCLUDING THE POSSIBILITY OF FINE AND IMPRISONMENT. SEE 18 USC § 1001 AND 33 USC § 1319. *(Penalties under these statutes may include fines up to $10,000 and/or maximum imprisonment of between 6 months and 5 years.)*

Dan W. Guy

SIGNATURE OF PRINCIPAL EXECUTIVE OFFICER OR AUTHORIZED AGENT

TELEPHONE: AREA CODE 801, NUMBER 637-5050

DATE: YEAR 91, MO 07, DAY 31

COMMENT AND EXPLANATION OF ANY VIOLATIONS *(Reference all attachments here)*

TSS IS LIMITED TO ONE TON PER DAY FROM ALL OUTFALLS. DURING PRECIPITATION EVENTS, SETTLEABLE SOLIDS SHALL BE LIMITED INSTEAD OF TSS. REPORT "DOES NOT APPLY" IN THE APPROPRIATE BOX.

PERMITTEE NAME/ADDRESS (Include Facility Name/Location if different)

NAME BELL CREEK COAL--CK SPUR

ADDRESS P.O. BOX 1378

BELLE WV 25021

FACILITY

LOCATION

ATTN: DAN W. GUY, MANAGER

NATIONAL POLLUTANT DISCHARGE ELIMINATION SYSTEM (NPDES) DISCHARGE MONITORING REPORT (DMR)

PERMIT NUMBER (2-16): WVG040035

DISCHARGE NUMBER (17-19): 001 A

P - FINAL

SEE PND DEFL-DEMS DISCH/RUN RVR

MONITORING PERIOD

FROM YEAR (20-21)	MO (22-23)	DAY (24-25)	TO YEAR (26-27)	MO (28-29)	DAY (30-31)
91	06	01	91	06	30

MINOR

NOTE: Read instructions before completing this form.

PARAMETER (32-37)		(3 Card Only) QUANTITY OR LOADING (46-53) AVERAGE	(54-61) MAXIMUM	UNITS	(4 Card Only) QUALITY OR CONCENTRATION (38-45) MINIMUM	(46-53) AVERAGE	(54-61) MAXIMUM	UNITS	NO. EX (62-63)	FREQUENCY OF ANALYSIS (64-68)	SAMPLE TYPE (69-70)
FLOW RATE	SAMPLE MEASUREMENT	NO FLOW			******	******	******				
00056 1 0 0 EFFLUENT GROSS VALUE	PERMIT REQUIREMENT	REPORT 30 DA AV	REPORT DAILY MX	GPD	******	******	******	**** ****		ONCE/ MONTH	EASRD
PH	SAMPLE MEASUREMENT	******	******			******					
00400 1 0 0 EFFLUENT GROSS VALUE	PERMIT REQUIREMENT	******	******	**** ****	6.5 DAILY MX	******	9.0 DAILY MX	SU		TWICE/ MONTH	GRAB
SOLIDS, TOTAL SUSPENDED	SAMPLE MEASUREMENT	******	******		******						
00530 P 0 0 SEE COMMENTS BELOW	PERMIT REQUIREMENT	******	******	**** ****	******	25 30 DA AV	70 DAILY MX	MG/L		ONCE/ MONTH	GRAB
SOLIDS, SETTLEABLE	SAMPLE MEASUREMENT	******	******		******	******					
00545 R 0 0 SEE COMMENTS BELOW	PERMIT REQUIREMENT	******	******	**** ****	******	******	0.5 DAILY MX	ML/L		ONCE/ MONTH	GRAB
OIL AND GREASE FREON EXTR-GRAV METH	SAMPLE MEASUREMENT	******	******		******	******					
00556 1 0 0 EFFLUENT GROSS VALUE	PERMIT REQUIREMENT	******	******	**** ****	******	******	10 DAILY MX	MG/L		ONCE/ MONTH	GRAB
IRON, TOTAL (AS FE)	SAMPLE MEASUREMENT	******	******		******	******					
01045 1 0 0 EFFLUENT GROSS VALUE	PERMIT REQUIREMENT	******	******	**** ****	******	******	2.0 DAILY MX	MG/L		ONCE/ MONTH	GRAB
FLOATING SOLIDS OR VISIBLE FORM-VISUAL	SAMPLE MEASUREMENT	******			******	******	******				
45613 1 0 0 EFFLUENT GROSS VALUE	PERMIT REQUIREMENT	******	0 DAILY MX	YES=1 NO=0	******	******	******	**** ****		ONCE/ MONTH	VISUAL

NAME/TITLE PRINCIPAL EXECUTIVE OFFICER

TYPED OR PRINTED

I CERTIFY UNDER PENALTY OF LAW THAT I HAVE PERSONALLY EXAMINED AND AM FAMILIAR WITH THE INFORMATION SUBMITTED HEREIN AND BASED ON MY INQUIRY OF THOSE INDIVIDUALS IMMEDIATELY RESPONSIBLE FOR OBTAINING THE INFORMATION I BELIEVE THE SUBMITTED INFORMATION IS TRUE ACCURATE AND COMPLETE I AM AWARE THAT THERE ARE SIGNIFICANT PENALTIES FOR SUBMITTING FALSE INFORMATION INCLUDING THE POSSIBILITY OF FINE AND IMPRISONMENT SEE 18 U.S.C. § 1001 AND 33 U.S.C. § 1319 (Penalties under these statutes may include fines up to $10,000 and or maximum imprisonment of between 6 months and 5 years.)

SIGNATURE OF PRINCIPAL EXECUTIVE OFFICER OR AUTHORIZED AGENT

TELEPHONE: AREA CODE / NUMBER

DATE: YEAR 91 MO 07 DAY 31

COMMENT AND EXPLANATION OF ANY VIOLATIONS (Reference all attachments here)

TSS IS LIMITED TO ONE TON PER DAY FROM ALL OUTFALLS. DURING PRECIPITATION EVENTS, SETTLEABLE SOLIDS SHALL BE LIMITED INSTEAD OF TSS. REPORT "DOES NOT APPLY" IN THE APPROPRIATE BOX.

PERMITTEE NAME/ADDRESS (Include Facility Name/Location if different)

NAME BEA CREEK COAL--CV SPUR

ADDRESS P.O. BOX 1378

PRICE UT 84501

FACILITY

LOCATION

ATTN: DAN W. GUY, MANAGER

NATIONAL POLLUTANT DISCHARGE ELIMINATION SYSTEM (NPDES)

DISCHARGE MONITORING REPORT (DMR)

(2-1)	(17-19)
UTC0400[illegible]	001 A
PERMIT NUMBER	DISCHARGE NUMBER

F - FINAL

SED PND OTFL-DRNG DTCH/PSC RVR

MONITORING PERIOD

FROM YEAR	MO	DAY	TO YEAR	MO	DAY
91	06	01	91	06	30
(20-21)	(22-23)	(24-25)	(26-27)	(28-29)	(30-31)

MINOR

NOTE: Read instructions before completing this form.

PARAMETER (32-37)		(3 Card Only) QUANTITY OR LOADING (46-53) AVERAGE	(54-61) MAXIMUM	UNITS	(4 Card Only) QUALITY OR CONCENTRATION (38-45) MINIMUM	(46-53) AVERAGE	(54-61) MAXIMUM	UNITS	NO. EX (62-63)	FREQUENCY OF ANALYSIS (64-68)	SAMPLE TYPE (69-70)
SANITARY WASTE DISCHARGED-ASSESSMNT 45614 1 0 0 EFFLUENT GROSS VALUE	SAMPLE MEASUREMENT	******			******	******	******				
	PERMIT REQUIREMENT	******	0 DAILY MX	YES=1 NO=0	******	******	******	**** ****		ONCE/ MONTH	VISUAL
SOLIDS, TOTAL DISSOLVED 70295 0 0 0 SEE COMMENTS BELOW	SAMPLE MEASUREMENT	******			******	******					
	PERMIT REQUIREMENT	******	2000 DAILY MX	LBS/DY	******	******	REPORT DAILY MX	MG/L		ONCE/ MONTH	GRAB
	SAMPLE MEASUREMENT										
	PERMIT REQUIREMENT										
	SAMPLE MEASUREMENT										
	PERMIT REQUIREMENT										
	SAMPLE MEASUREMENT										
	PERMIT REQUIREMENT										
	SAMPLE MEASUREMENT										
	PERMIT REQUIREMENT										
	SAMPLE MEASUREMENT										
	PERMIT REQUIREMENT										

NAME/TITLE PRINCIPAL EXECUTIVE OFFICER

Dan W. Guy
Manager/ P & C

TYPED OR PRINTED

I CERTIFY UNDER PENALTY OF LAW THAT I HAVE PERSONALLY EXAMINED AND AM FAMILIAR WITH THE INFORMATION SUBMITTED HEREIN AND BASED ON MY INQUIRY OF THOSE INDIVIDUALS IMMEDIATELY RESPONSIBLE FOR OBTAINING THE INFORMATION. I BELIEVE THE SUBMITTED INFORMATION IS TRUE ACCURATE AND COMPLETE. I AM AWARE THAT THERE ARE SIGNIFICANT PENALTIES FOR SUBMITTING FALSE INFORMATION INCLUDING THE POSSIBILITY OF FINE AND IMPRISONMENT. SEE 18 USC § 1001 AND 33 USC § 1319. (Penalties under these statutes may include fines up to $10,000 and/or maximum imprisonment of between 6 months and 5 years.)

Dan W. Guy

SIGNATURE OF PRINCIPAL EXECUTIVE OFFICER OR AUTHORIZED AGENT

TELEPHONE AREA CODE	NUMBER	DATE YEAR	MO	DAY
801	637-5050	91	07	31

COMMENT AND EXPLANATION OF ANY VIOLATIONS (Reference all attachments here)

TDS IS LIMITED TO ONE TON PER DAY FROM ALL OUTFALLS. DURING PRECIPITATION EVENTS, SETTLEABLE SOLIDS SHALL BE LIMITED INSTEAD OF TSS. REPORT "DOES NOT APPLY" IN THE APPROPRIATE ROW.

EPA Form 3320-1 (Rev. 9-88) Previous editions may be used. (REPLACES EPA FORM T-40 WHICH MAY NOT BE USED.)

00048/060889-1838

BEAVER CREEK Coal Company
Post Office Box 1378
Price, Utah 84501
Telephone 801 637-5050

April 29, 1991

Donald A. Hilden, Ph.D., Chief
Permits and Compliance Section
Bureau of Water Pollution Control
Utah Division of Environmental Health
288 North 1460 West
P.O. Box 16690
Salt Lake City, Utah 84116-0690

Dear Mr. Hilden:

Enclosed please find Quarterly Discharge Monitoring Reports for Beaver Creek Coal Company's UPDES Permit Numbers UTG040003, UTG040004, and UTG040005. These reports are on the preprinted DMRs provided by the State of Utah, and cover the first quarter of 1991.

If you have any questions or need any additional information, please contact me.

Respectfully,

Dan W. Guy

Dan W. Guy
Mgr. Permitting/Compliance

DWG/pd

Enclosures

cc: Donna Franklin, E.P.A.
Lowell Braxton, UDOGM
File

BEAVER CREEK Coal Company
Post Office Box 1378
Price, Utah 84501
Telephone 801 637-5050

April 29, 1991

Mr. Lowell Braxton, Administrator
Utah Division of Oil, Gas & Mining
355 West North Temple
3 Triad Center, Suite 350
Salt Lake City, Utah 84180-1203

Dear Mr. Braxton:

Enclosed please find Quarterly Discharge Monitoring Reports for Beaver Creek Coal Company's UPDES Permit Numbers UTG040003, UTG040004, and UTG040005. These reports are on the preprinted DMRs provided by the State of Utah, and cover the first quarter of 1991.

If you have any questions or need any additional information, please contact me.

Respectfully,

Dan W. Guy

Dan W. Guy
Mgr. Permitting/Compliance

DWG/pd

Enclosures

BEAVER CREEK Coal Company
Post Office Box 1378
Price, Utah 84501
Telephone 801 637-5050

April 29, 1991

Ms. Donna Franklin
U.S.E.P.A., Region VIII
999 18th Street
Denver, Place - Suite 500 WM-C
Denver, CO 80202-2405

Dear Ms. Franklin:

Enclosed please find Quarterly Discharge Monitoring Reports for Beaver Creek Coal Company's UPDES Permit Numbers UTG040003, UTG040004, and UTG040005. These reports are on the preprinted DMRs provided by the State of Utah, and cover the first quarter of 1991.

If you have any questions or need any additional information, please contact me.

Respectfully,

Dan W. Guy
Mgr. Permitting/Compliance

DWG/pd

Enclosures

File 4-E-2-1

PERMITTEE N ADDRESS (Include Facility Name/L if different)

NAME RE R CREEK COAL--CV SPUR

ADDRESS P.O. BOX 1378

PRICE UT 84501

FACILITY

LOCATION

ATTN: DAN W. GUY, MANAGER

NATIONAL POLLU DISCHARGE ELIMINATION SYSTEM (NPDES)

DISCHA MONITORING REPORT (DMR)

(2 (17-19)

UTG040005	001 A
PERMIT NUMBER	DISCHARGE NUMBER

F - FINAL

SED PND OTFL-DRNG DTCH/PRC RVR

MONITORING PERIOD

	YEAR	MO	DAY		YEAR	MO	DAY
FROM	91	02	01	TO	91	02	28
	(20-21)	(22-23)	(24-25)		(26-27)	(28-29)	(30-31)

MINOR

NOTE: Read instructions before completing this form.

PARAMETER (32-37)		(3 Card Only) QUANTITY OR LOADING (46-53) AVERAGE	(54-61) MAXIMUM	UNITS	(4 Card Only) QUALITY OR CONCENTRATION (38-45) MINIMUM	(46-53) AVERAGE	(54-61) MAXIMUM	UNITS	NO. EX (62-63)	FREQUENCY OF ANALYSIS (64-68)	SAMPLE TYPE (69-70)
FLOW RATE	SAMPLE MEASUREMENT	NO DISCHARGE			******	******	******				
00056 1 0 0 EFFLUENT GROSS VALUE	PERMIT REQUIREMENT	REPORT 30 DA AV	REPORT DAILY MX	GPD	******	******	******	**** ****		ONCE/ MONTH	MEASRD
PH	SAMPLE MEASUREMENT	******	******			******					
00400 1 0 0 EFFLUENT GROSS VALUE	PERMIT REQUIREMENT	******	******	**** ****	6.5 DAILY MN	******	9.0 DAILY MX	SU		TWICE/ MONTH	GRAB
SOLIDS, TOTAL SUSPENDED	SAMPLE MEASUREMENT	******	******		******						
00530 P 0 0 SEE COMMENTS BELOW	PERMIT REQUIREMENT	******	******	**** ****	******	25 30 DA AV	70 DAILY MX	MG/L		ONCE/ MONTH	GRAB
SOLIDS, SETTLEABLE	SAMPLE MEASUREMENT	******	******		******	******					
00545 R 0 0 SEE COMMENTS BELOW	PERMIT REQUIREMENT	******	******	**** ****	******	******	0.5 DAILY MX	ML/L		ONCE/ MONTH	GRAB
OIL AND GREASE FREON EXTR-GRAV METH	SAMPLE MEASUREMENT	******	******		******	******					
00556 1 0 0 EFFLUENT GROSS VALUE	PERMIT REQUIREMENT	******	******	**** ****	******	******	10 DAILY MX	MG/L		ONCE/ MONTH	GRAB
IRON, TOTAL (AS FE)	SAMPLE MEASUREMENT	******	******		******	******					
01045 1 0 0 EFFLUENT GROSS VALUE	PERMIT REQUIREMENT	******	******	**** ****	******	******	2.0 DAILY MX	MG/L		ONCE/ MONTH	GRAB
FLOATING SOLIDS OR VISIBLE FOAM-VISUAL	SAMPLE MEASUREMENT	******			******	******	******				
45613 1 0 0 EFFLUENT GROSS VALUE	PERMIT REQUIREMENT	******	0 DAILY MX	YES=1 NO=0	******	******	******	**** ****		ONCE/ MONTH	VISUAL

NAME/TITLE PRINCIPAL EXECUTIVE OFFICER

Dan W. Guy
Manager Permitting & Compliance

TYPED OR PRINTED

I CERTIFY UNDER PENALTY OF LAW THAT I HAVE PERSONALLY EXAMINED AND AM FAMILIAR WITH THE INFORMATION SUBMITTED HEREIN AND BASED ON MY INQUIRY OF THOSE INDIVIDUALS IMMEDIATELY RESPONSIBLE FOR OBTAINING THE INFORMATION I BELIEVE THE SUBMITTED INFORMATION IS TRUE ACCURATE AND COMPLETE I AM AWARE THAT THERE ARE SIGNIFICANT PENALTIES FOR SUBMITTING FALSE INFORMATION INCLUDING THE POSSIBILITY OF FINE AND IMPRISONMENT SEE 18 USC § 1001 AND 33 USC § 1319 (Penalties under these statutes may include fines up to $10,000 and or maximum imprisonment of between 6 months and 5 years.)

Dan W. Guy

SIGNATURE OF PRINCIPAL EXECUTIVE OFFICER OR AUTHORIZED AGENT

TELEPHONE		DATE		
801	637-5050	91	04	22
AREA CODE	NUMBER	YEAR	MO	DAY

COMMENT AND EXPLANATION OF ANY VIOLATIONS (Reference all attachments here)

TDS IS LIMITED TO ONE TON PER DAY FROM ALL OUTFALLS. DURING PRECIPITATION EVENTS, SETTLEABLE SOLIDS SHALL BE LIMITED INSTEAD OF TSS. REPORT "DOES NOT APPLY" IN THE APPROPRIATE ROW.

PERMITTEE N[illegible] /ADDRESS (Include Facility Name/L[illegible] if different)

NAME BE[illegible] 3 CREEK COAL--CV SPUR

ADDRESS P.O. BOX 1378

PRICE UT 84501

FACILITY

LOCATION

ATTN: DAN W. GUY, MANAGER

NATIONAL POLLU[illegible] DISCHARGE ELIMINATION SYSTEM (NPDES)

DISCHA[illegible] MONITORING REPORT (DMR)

(2[illegible] (17-19)

UTG040005 — PERMIT NUMBER

001 A — DISCHARGE NUMBER

F - FINAL

SED PND OTFL-DRNG DTCH/PRC RVR

MONITORING PERIOD

	YEAR	MO	DAY		YEAR	MO	DAY
FROM	91	02	01	TO	91	02	28
	(20-21)	(22-23)	(24-25)		(26-27)	(28-29)	(30-31)

MINOR

NOTE: Read instructions before completing this form.

PARAMETER (32-37)		(3 Card Only) QUANTITY OR LOADING (46-53) AVERAGE	(54-61) MAXIMUM	UNITS	(4 Card Only) QUALITY OR CONCENTRATION (38-45) MINIMUM	(46-53) AVERAGE	(54-61) MAXIMUM	UNITS	NO. EX (62-63)	FREQUENCY OF ANALYSIS (64-68)	SAMPLE TYPE (69-70)
SANITARY WASTE DISCHARGED-ASSESSMNT 45614 1 0 0 EFFLUENT GROSS VALUE	SAMPLE MEASUREMENT	******			******	******	******				
	PERMIT REQUIREMENT	******	0 DAILY MX	YES=1 NO=0	******	******	******	**** ****		ONCE/ MONTH	VISUAL
SOLIDS, TOTAL DISSOLVED 70295 0 0 0 SEE COMMENTS BELOW	SAMPLE MEASUREMENT	******			******	******					
	PERMIT REQUIREMENT	******	2000 DAILY MX	LBS/DY	******	******	REPORT DAILY MX	MG/L		ONCE/ MONTH	GRAB
	SAMPLE MEASUREMENT										
	PERMIT REQUIREMENT										
	SAMPLE MEASUREMENT										
	PERMIT REQUIREMENT										
	SAMPLE MEASUREMENT										
	PERMIT REQUIREMENT										
	SAMPLE MEASUREMENT										
	PERMIT REQUIREMENT										
	SAMPLE MEASUREMENT										
	PERMIT REQUIREMENT										

NAME/TITLE PRINCIPAL EXECUTIVE OFFICER

Dan W. Guy
Manager Permitting & Compliance

TYPED OR PRINTED

I CERTIFY UNDER PENALTY OF LAW THAT I HAVE PERSONALLY EXAMINED AND AM FAMILIAR WITH THE INFORMATION SUBMITTED HEREIN AND BASED ON MY INQUIRY OF THOSE INDIVIDUALS IMMEDIATELY RESPONSIBLE FOR OBTAINING THE INFORMATION I BELIEVE THE SUBMITTED INFORMATION IS TRUE ACCURATE AND COMPLETE I AM AWARE THAT THERE ARE SIGNIFICANT PENALTIES FOR SUBMITTING FALSE INFORMATION INCLUDING THE POSSIBILITY OF FINE AND IMPRISONMENT SEE 18 USC § 1001 AND 33 USC § 1319 (Penalties under these statutes may include fines up to $10,000 and/or maximum imprisonment of between 6 months and 5 years.)

Dan W. Guy

SIGNATURE OF PRINCIPAL EXECUTIVE OFFICER OR AUTHORIZED AGENT

TELEPHONE		DATE		
801	637-5050	91	04	22
AREA CODE	NUMBER	YEAR	MO	DAY

COMMENT AND EXPLANATION OF ANY VIOLATIONS (Reference all attachments here)

TDS IS LIMITED TO ONE TON PER DAY FROM ALL OUTFALLS. DURING PRECIPITATION EVENTS, SETTLEABLE SOLIDS SHALL BE LIMITED INSTEAD OF TSS. REPORT "DOES NOT APPLY" IN THE APPROPRIATE ROW.

PERMITTEE NAME/ADDRESS (Include Facility Name/Location if different)
NAME BE R CREEK COAL--CV SPUR
ADDRESS P.O. BOX 1378
PRICE UT 84501

FACILITY
LOCATION
ATTN: DAN W. GUY, MANAGER

NATIONAL POLLUTANT DISCHARGE ELIMINATION SYSTEM (NPDES)
DISCHARGE MONITORING REPORT (DMR)

UTG040005 (PERMIT NUMBER)
001 A (DISCHARGE NUMBER)

F - FINAL
SED PND DTPL-DRNG DTCH/PRC RVR

MONITORING PERIOD

FROM YEAR	MO	DAY	TO YEAR	MO	DAY
91	03	01	91	03	31
(20-21)	(22-23)	(24-25)	(26-27)	(28-29)	(30-31)

MINOR

NOTE: Read instructions before completing this form.

PARAMETER (32-37)		(3 Card Only) QUANTITY OR LOADING (46-53) AVERAGE	(54-61) MAXIMUM	UNITS	(4 Card Only) QUALITY OR CONCENTRATION (38-45) MINIMUM	(46-53) AVERAGE	(54-61) MAXIMUM	UNITS	NO. EX (62-63)	FREQUENCY OF ANALYSIS (64-68)	SAMPLE TYPE (69-70)
FLOW RATE	SAMPLE MEASUREMENT	NO	DISCHARGE		******	******	******				
00056 1 0 0 EFFLUENT GROSS VALUE	PERMIT REQUIREMENT	REPORT 30 DA AV	REPORT DAILY MX	GPD	******	******	******	**** ****		ONCE/ MONTH	MEASRD
PH	SAMPLE MEASUREMENT	******	******			******					
00400 1 0 0 EFFLUENT GROSS VALUE	PERMIT REQUIREMENT	******	******	**** ****	6.5 DAILY MN	******	9.0 DAILY MX	SU		TWICE/ MONTH	GRAB
SOLIDS, TOTAL SUSPENDED	SAMPLE MEASUREMENT	******	******		******						
00530 P 0 0 SEE COMMENTS BELOW	PERMIT REQUIREMENT	******	******	**** ****	******	25 30 DA AV	70 DAILY MX	MG/L		ONCE/ MONTH	GRAB
SOLIDS, SETTLEABLE	SAMPLE MEASUREMENT	******	******		******	******					
00545 R 0 0 SEE COMMENTS BELOW	PERMIT REQUIREMENT	******	******	**** ****	******	******	0.5 DAILY MX	ML/L		ONCE/ MONTH	GRAB
OIL AND GREASE FREON EXTR-GRAV METH	SAMPLE MEASUREMENT	******	******		******	******					
00556 1 0 0 EFFLUENT GROSS VALUE	PERMIT REQUIREMENT	******	******	**** ****	******	******	10 DAILY MX	MG/L		ONCE/ MONTH	GRAB
IRON, TOTAL (AS FE)	SAMPLE MEASUREMENT	******	******		******	******					
01045 1 0 0 EFFLUENT GROSS VALUE	PERMIT REQUIREMENT	******	******	**** ****	******	******	2.0 DAILY MX	MG/L		ONCE/ MONTH	GRAB
FLOATING SOLIDS OR VISIBLE FOAM-VISUAL	SAMPLE MEASUREMENT	******			******	******	******				
45613 1 0 0 EFFLUENT GROSS VALUE	PERMIT REQUIREMENT	******	0 DAILY MX	YES=1 NO=0	******	******	******	**** ****		ONCE/ MONTH	VISUAL

NAME/TITLE PRINCIPAL EXECUTIVE OFFICER
Dan W. Guy
Manager Permitting & Compliance
TYPED OR PRINTED

I CERTIFY UNDER PENALTY OF LAW THAT I HAVE PERSONALLY EXAMINED AND AM FAMILIAR WITH THE INFORMATION SUBMITTED HEREIN AND BASED ON MY INQUIRY OF THOSE INDIVIDUALS IMMEDIATELY RESPONSIBLE FOR OBTAINING THE INFORMATION I BELIEVE THE SUBMITTED INFORMATION IS TRUE ACCURATE AND COMPLETE I AM AWARE THAT THERE ARE SIGNIFICANT PENALTIES FOR SUBMITTING FALSE INFORMATION INCLUDING THE POSSIBILITY OF FINE AND IMPRISONMENT SEE 18 USC § 1001 AND 33 USC § 1319 (Penalties under these statutes may include fines up to $10,000 and or maximum imprisonment of between 6 months and 5 years)

Dan W. Guy
SIGNATURE OF PRINCIPAL EXECUTIVE OFFICER OR AUTHORIZED AGENT

TELEPHONE AREA CODE	NUMBER	DATE YEAR	MO	DAY
801	637-5050	91	04	22

COMMENT AND EXPLANATION OF ANY VIOLATIONS (Reference all attachments here)

TDS IS LIMITED TO ONE TON PER DAY FROM ALL OUTFALLS. DURING PRECIPITATION EVENTS, SETTLEABLE SOLIDS SHALL BE LIMITED INSTEAD OF TSS. REPORT "DOES NOT APPLY" IN THE APPROPRIATE ROW.

PERMITTEE NAME/ADDRESS (Include Facility Name/Location if different)

NAME BE. 3 CREEK COAL--CV SPUR

ADDRESS P.O. BOX 1379

PRICE UT 84501

FACILITY

LOCATION

ATTN: DAN W. GUY, MANAGER

NATIONAL POLLUTANT DISCHARGE ELIMINATION SYSTEM (NPDES)
DISCHARGE MONITORING REPORT (DMR)

F - FINAL

PERMIT NUMBER: UTG040005

DISCHARGE NUMBER: 001 A

SED PND OTFL-DRNG DTCH/PRC RVR

MONITORING PERIOD

FROM YEAR	MO	DAY	TO YEAR	MO	DAY
91	03	01	91	03	31
(20-21)	(22-23)	(24-25)	(26-27)	(28-29)	(30-31)

MINOR

NOTE: Read instructions before completing this form.

PARAMETER (32-37)		(3 Card Only) QUANTITY OR LOADING (46-53) AVERAGE	(54-61) MAXIMUM	UNITS	(4 Card Only) QUALITY OR CONCENTRATION (38-45) MINIMUM	(46-53) AVERAGE	(54-61) MAXIMUM	UNITS	NO. EX (62-63)	FREQUENCY OF ANALYSIS (64-68)	SAMPLE TYPE (69-70)
SANITARY WASTE DISCHARGED-ASSESSMNT 45614 1 0 0 EFFLUENT GROSS VALUE	SAMPLE MEASUREMENT	******			******	******	******				
	PERMIT REQUIREMENT	******	0 DAILY MX	YES=1 NO=0	******	******	******	**** ****		ONCE/ MONTH	VISUAL
SOLIDS, TOTAL DISSOLVED 70295 0 0 0 SEE COMMENTS BELOW	SAMPLE MEASUREMENT	******			******	******					
	PERMIT REQUIREMENT	******	2000 DAILY MX	LBS/DY	******	******	REPORT DAILY MX	MG/L		ONCE/ MONTH	GRAB
	SAMPLE MEASUREMENT										
	PERMIT REQUIREMENT										
	SAMPLE MEASUREMENT										
	PERMIT REQUIREMENT										
	SAMPLE MEASUREMENT										
	PERMIT REQUIREMENT										
	SAMPLE MEASUREMENT										
	PERMIT REQUIREMENT										
	SAMPLE MEASUREMENT										
	PERMIT REQUIREMENT										

NAME/TITLE PRINCIPAL EXECUTIVE OFFICER

Dan W. Guy
Manager Permitting & Compliance

TYPED OR PRINTED

I CERTIFY UNDER PENALTY OF LAW THAT I HAVE PERSONALLY EXAMINED AND AM FAMILIAR WITH THE INFORMATION SUBMITTED HEREIN AND BASED ON MY INQUIRY OF THOSE INDIVIDUALS IMMEDIATELY RESPONSIBLE FOR OBTAINING THE INFORMATION I BELIEVE THE SUBMITTED INFORMATION IS TRUE ACCURATE AND COMPLETE I AM AWARE THAT THERE ARE SIGNIFICANT PENALTIES FOR SUBMITTING FALSE INFORMATION INCLUDING THE POSSIBILITY OF FINE AND IMPRISONMENT SEE 18 USC § 1001 AND 33 USC § 1319 (Penalties under these statutes may include fines up to $10,000 and or maximum imprisonment of between 6 months and 5 years)

SIGNATURE OF PRINCIPAL EXECUTIVE OFFICER OR AUTHORIZED AGENT

Dan W. Guy

TELEPHONE: AREA CODE 801 NUMBER 637-5050

DATE: YEAR 91 MO 04 DAY 22

COMMENT AND EXPLANATION OF ANY VIOLATIONS (Reference all attachments here)

TDS IS LIMITED TO ONE TON PER DAY FROM ALL OUTFALLS. DURING PRECIPITATION EVENTS, SETTLEABLE SOLIDS SHALL BE LIMITED INSTEAD OF TSS. REPORT "DOES NOT APPLY" IN THE APPROPRIATE ROW.

POND INSPECTIONS

E.I.S Hydrology
Pond Inspection Report

POND: #1 LOCATION: Old Spur

ITEM	REMARKS
(1) Potential Safety Hazards	None
(2) Slope Stability	Stable
(3) Erosion	None
(4) Construction and Maintenance Performance Standards	Good - Pond has approx - 3.6' Water
(5) Recommendations/Comments	No Discharge

I have performed the above inspection on this pond and do hereby certify it to be a true and accurate representation of the pond at this time.

Inspector

Date 12/18/91

E.I.S Hydrology
Pond Inspection Report

POND: #2 & #3 LOCATION: CV Spur

ITEM	REMARKS
(1) Potential Safety Hazards	None
(2) Slope Stability	Stabil
(3) Erosion	None
(4) Construction and Maintenance Performance Standards	Good - Ponds Clean & Dry
(5) Recommendations/Comments	None

I have performed the above inspection on this pond and do hereby certify it to be a true and accurate representation of the pond at this time.

[signature]
Inspector

Date 15/18/91

E.I.S Hydrology
Pond Inspection Report

POND: #4

LOCATION: [illegible]

ITEM	REMARKS
(1) Potential Safety Hazards	None
(2) Slope Stability	[illegible]
(3) Erosion	None
(4) Construction and Maintenance Performance Standards	Pond Cleaned 12/23 Water Level at 4.6'
(5) Recommendations/Comments	Ditch to Pond Clean

I have performed the above inspection on this pond and do hereby certify it to be a true and accurate representation of the pond at this time.

[illegible]
Inspector

12/18/91
Date

E.I.S Hydrology
Pond Inspection Report

POND: #5 LOCATION: W Lynn

ITEM	REMARKS
(1) Potential Safety Hazards	None
(2) Slope Stability	Stable
(3) Erosion	None
(4) Construction and Maintenance Performance Standards	Some sod. upper end - frozen New Em. Spillway completed on 12/17 1991 - No Discharge
(5) Recommendations/Comments	

I have performed the above inspection on this pond and do hereby certify it to be a true and accurate representation of the pond at this time.

Inspector

Date 12/18/91

E.I.S Hydrology
Pond Inspection Report

POND: #6 LOCATION: [illegible]

ITEM	REMARKS
(1) Potential Safety Hazards	None
(2) Slope Stability	Stable
(3) Erosion	None
(4) Construction and Maintenance Performance Standards	New Spillway - Rip-Rap implemented on 12/18/91
(5) Recommendations/Comments	Water Level @ 2'6" - No Discharge Surface frozen

I have performed the above inspection on this pond and do hereby certify it to be a true and accurate representation of the pond at this time.

[signature]
Inspector

12/18/91
Date

E.I.S Hydrology
Pond Inspection Report

POND: 1, 2, 3 ~~2, 3, 4~~

LOCATION: CC Spence

ITEM	REMARKS
(1) Potential Safety Hazards	None
(2) Slope Stability	[illegible]
(3) Erosion	None
(4) Construction and Maintenance Performance Standards	[illegible]
(5) Recommendations/Comments	No Discharge Pond Pond Dry

I have performed the above inspection on this pond and do hereby certify it to be a true and accurate representation of the pond at this time.

[illegible]
Inspector

11/20/90
Date

E.I.S Hydrology
Pond Inspection Report

POND: #4

LOCATION: CL-Spur

ITEM	REMARKS
(1) Potential Safety Hazards	None
(2) Slope Stability	Stable
(3) Erosion	None
(4) Construction and Maintenance Performance Standards	Good
(5) Recommendations/Comments	No Discharge Pond Pond Full - Water No Seal Level

I have performed the above inspection on this pond and do hereby certify it to be a true and accurate representation of the pond at this time.

Inspector

11/25/91
Date

E.I.S Hydrology
Pond Inspection Report

POND: #5

LOCATION: Cl Spur

ITEM	REMARKS
(1) Potential Safety Hazards	None
(2) Slope Stability	Stable
(3) Erosion	None
(4) Construction and Maintenance Performance Standards	Good
(5) Recommendations/Comments	No Discharge Pond At 70 Water Level Sed @ 30%

I have performed the above inspection on this pond and do hereby certify it to be a true and accurate representation of the pond at this time.

[signature]
Inspector

1/20/91
Date

E.I.S Hydrology
Pond Inspection Report

POND: #6

LOCATION: Old Green

ITEM	REMARKS
(1) Potential Safety Hazards	None
(2) Slope Stability	Stable
(3) Erosion	None
(4) Construction and Maintenance Performance Standards	Good
(5) Recommendations/Comments	No Discharge Pond 1st and 2nd Cell Full - 3rd Cell Dry

I have performed the above inspection on this pond and do hereby certify it to be a true and accurate representation of the pond at this time.

Inspector

Date 11/30/92

E.I.S Hydrology
Pond Inspection Report

POND: 1,2,3,4, (Lewis)

LOCATION: W. Spur -

ITEM	REMARKS
(1) Potential Safety Hazards	None
(2) Slope Stability	Stable
(3) Erosion	None
(4) Construction and Maintenance Performance Standards	Good
(5) Recommendations/Comments	No Discharge Pond #4 - 30% Water - 133 all Clean and Dry

I have performed the above inspection on this pond and do hereby certify it to be a true and accurate representation of the pond at this time.

[signature]
Inspector

9/26/91
Date

E.I.S Hydrology
Pond Inspection Report

POND: #5

LOCATION: W Spurs

ITEM	REMARKS
(1) Potential Safety Hazards	None
(2) Slope Stability	Stable
(3) Erosion	None (minnow) on inlet - East End
(4) Construction and Maintenance Performance Standards	Good
(5) Recommendations/Comments	No Discharge Pond at 60% Level - Bed Load at 20%

I have performed the above inspection on this pond and do hereby certify it to be a true and accurate representation of the pond at this time.

[signature]
Inspector

9/24/91
Date

E.I.S Hydrology
Pond Inspection Report

POND: #6

LOCATION: [illegible]

ITEM	REMARKS
(1) Potential Safety Hazards	None
(2) Slope Stability	Stable
(3) Erosion	None
(4) Construction and Maintenance Performance Standards	Good
(5) Recommendations/Comments	No Discharge Pond 80% full of Water Sed Well at 40%

I have performed the above inspection on this pond and do hereby certify it to be a true and accurate representation of the pond at this time.

[illegible]
Inspector

9/26/91
Date

E.I.S Hydrology
Pond Inspection Report

POND: 1-2-3-4

LOCATION: W Spurs

ITEM	REMARKS
(1) Potential Safety Hazards	None
(2) Slope Stability	Stable
(3) Erosion	Repaired on bypass structures New Concrete - 1-2-3
(4) Construction and Maintenance Performance Standards	Good - Dry & Clean
(5) Recommendations/Comments	

I have performed the above inspection on this pond and do hereby certify it to be a true and accurate representation of the pond at this time.

Inspector

Date 9/27/91

E.I.S Hydrology
Pond Inspection Report

POND: #5 LOCATION: CV Span

ITEM	REMARKS
(1) Potential Safety Hazards	None
(2) Slope Stability	Stable
(3) Erosion	None
(4) Construction and Maintenance Performance Standards	Pond - All Bat Dry - may be advantages to Clean
(5) Recommendations/Comments	CV-BW - Dry - No Discharge 1500/5/27/91

I have performed the above inspection on this pond and do hereby certify it to be a true and accurate representation of the pond at this time.

[signature]
Inspector

5/27/91
Date

E.I.S Hydrology
Pond Inspection Report

POND: #6

LOCATION: W Spur

ITEM	REMARKS
(1) Potential Safety Hazards	None
(2) Slope Stability	Stable
(3) Erosion	Minnow on Pinhole
(4) Construction and Maintenance Performance Standards	Good
(5) Recommendations/Comments	Pond @ 70% Cap. No Trash or Drainage

I have performed the above inspection on this pond and do hereby certify it to be a true and accurate representation of the pond at this time.

[illegible]
Inspector

5/27/91
Date

POND INSPECTION REPORT

POND: Plant Overflow

LOCATION: C.V. Spur

ITEM	REMARKS
(1) Potential Safety Hazards	None
(2) Slope Stability	Stable - Incised Pond
(3) Erosion	None Evident
(4) Construction and Maintenance Performance Standards	O.K. - Pond full with minor flow into Pond 6.
(5) Recommendations/Comments	None

I have performed the above inspection on this pond and do hereby certify it to be a true and accurate representation of the pond at this time.

Dan W. [illegible]

5/27/91
Date

E.I.S Hydrology
Pond Inspection Report

POND: #6 LOCATION: Old Spruce

ITEM	REMARKS
(1) Potential Safety Hazards	None
(2) Slope Stability	Stable
(3) Erosion	None
(4) Construction and Maintenance Performance Standards	Good
(5) Recommendations/Comments	No Discharge 80% Capacity

I have performed the above inspection on this pond and do hereby certify it to be a true and accurate representation of the pond at this time.

[signature]
Inspector

4/3/91
Date

E.I.S Hydrology
Pond Inspection Report

POND: #1 LOCATION: CV Spur

ITEM	REMARKS
(1) Potential Safety Hazards	None
(2) Slope Stability	Stable
(3) Erosion	None
(4) Construction and Maintenance Performance Standards	Good - Cleaned Fall - "90"
(5) Recommendations/Comments	Dry No Discharge

I have performed the above inspection on this pond and do hereby certify it to be a true and accurate representation of the pond at this time.

[signature]
Inspector

2/25/91
Date

E.I.S Hydrology
Pond Inspection Report

POND: #2 LOCATION: CV Spur

ITEM	REMARKS
(1) Potential Safety Hazards	None
(2) Slope Stability	Stable
(3) Erosion	None
(4) Construction and Maintenance Performance Standards	Good
(5) Recommendations/Comments	Pond @ 10% - No Discharge

I have performed the above inspection on this pond and do hereby certify it to be a true and accurate representation of the pond at this time.

[signature]
Inspector

2/25/91
Date

E.I.S Hydrology
Pond Inspection Report

POND: 43

LOCATION: [illegible]

ITEM	REMARKS
(1) Potential Safety Hazards	None
(2) Slope Stability	Stable
(3) Erosion	None
(4) Construction and Maintenance Performance Standards	Good
(5) Recommendations/Comments	[illegible] No Discharge

I have performed the above inspection on this pond and do hereby certify it to be a true and accurate representation of the pond at this time.

[illegible]
Inspector

2/25/91
Date

E.I.S Hydrology
Pond Inspection Report

POND: #4 LOCATION: CV Spur

ITEM	REMARKS
(1) Potential Safety Hazards	None
(2) Slope Stability	Stabil insured.
(3) Erosion	None
(4) Construction and Maintenance Performance Standards	Good
(5) Recommendations/Comments	Pond Dry No Discharge

I have performed the above inspection on this pond and do hereby certify it to be a true and accurate representation of the pond at this time.

[signature]
Inspector

2/15/91
Date

E.I.S Hydrology
Pond Inspection Report

POND: #3

LOCATION: W Spur.

ITEM	REMARKS
(1) Potential Safety Hazards	None
(2) Slope Stability	Stable
(3) Erosion	None
(4) Construction and Maintenance Performance Standards	Good - Pond @ 40% Small disturbance adjacent to inlet.
(5) Recommendations/Comments	Seal disturbed area spring 91, No Discharge

I have performed the above inspection on this pond and do hereby certify it to be a true and accurate representation of the pond at this time.

Inspector

2/25/91
Date

E.I.S Hydrology
Pond Inspection Report

POND: #6 LOCATION: W-Spur

ITEM	REMARKS
(1) Potential Safety Hazards	None
(2) Slope Stability	Stabil
(3) Erosion	Minor on inlet - "repaired" on site
(4) Construction and Maintenance Performance Standards	Good Pond @ 60%
(5) Recommendations/Comments	No Discharge

I have performed the above inspection on this pond and do hereby certify it to be a true and accurate representation of the pond at this time.

[signature]
Inspector

2/25/91
Date

[illegible] Hydrology
Pond Inspection Report

Pond #6

POND: CV-15

LOCATION: CV Space

ITEM	REMARKS
(1) Potential Safety Hazards	None
(2) Slope Stability	Stable
(3) Erosion	None
(4) Construction and Maintenance Performance Standards	Good No Discharge Tree over
(5) Recommendations/Comments	None

I have performed the above inspection on this pond and do hereby certify it to be a true and accurate representation of the pond at this time.

[illegible]
Inspector

3/7/91
Date

BEAVER CREEK Coal Company
Post Office Box 1378
Price, Utah 84501
Telephone 801 637-5050

August 28, 1990

On-Scene Coordinator
U.S. EPA Region VIII
Waste Management Division
Emergency Response Branch
999 18th St., Suite 500
Denver, CO 80202-2405

Re: **Continuous Release Reporting For Radionuclides**

Dear On-Scene Coordinator:

Please replace the attachment to the initial written report dated August 23, 1990, with the enclosed attachment.

If you have any questions or concerns please call Dan W. Guy (801) 637-5050.

Respectfully,

Dan W. Guy
Mgr. Permitting/Compliance

AIR QUALITY

Mountain Coal Company
Trail Mountain Mine
Post Office Box 1378
Price, Utah 84501
Telephone 801 637-5050 (Price Office)
801 637-5203 (Mine Office)
801 748-2140 (Mine Site)

CERTIFIED MAIL

July 31, 1991

F. Burnell Cordner
Director
Utah Bureau of Air Quality
Utah Dept. of Health
P.O. Box 16690
Salt Lake City, Utah 84116-0690

Re: Mountain Coal Co.
(Formerly Beaver Creek Coal Co.)
1990 Emission Inventory

Dear Mr. Cordner:

Enclosed is the 1990 Emission Inventory for Mountain Coal Co. (formerly Beaver Creek Coal Co.) properties as requested.

I have also reviewed the list of substances in Title III of the CAAA. To my knowledge, the only substance released in a possibly reportable quantity is Radionuclides. I have enclosed copies of correspondence relating to such potential releases of radionuclides for your information.

If you have any questions, or need any further information, please let me know.

Sincerely,

Dan W. Guy
Mgr. Permitting/Compliance

cc: Scott Jones
Dana Echter
File

Firm Name MOUNTAIN COAL COMPANY

Plant Location C.V. SPUR PROCESSING FACILITY
(T. 15 S., R. 10 E., S.L.B.M)

Fugitive Emission Source Description (be specific)	Materials Used: Type	Materials Used: % Moisture Content	Materials Used: Quantity (Units/YR)	Operating Time Number of Hours /Yr	Production Units/hr: Design Rate	Production Units/hr: Average Actual Rate	Pollutants (Tons/Yr.): Particulates (Fug. Dust)	Pollutants (Tons/Yr.): SO_2	Pollutants (Tons/Yr.): NO_x	Pollutants (Tons/Yr.): HC	Pollutants (Tons/Yr.): CO	Pollutants (Tons/Yr.): Other (Specify)	% Annual Production: Winter	% Annual Production: Spring	% Annual Production: Summer	% Annual Production: Fall
GRIZZLY-HOPPER (ENCLOSED)	COAL	8%	858,000	3328	400 TPH	258 TPH	0.86						25	25	25	25
ROLL CRUSHER (ENCLOSED)	Coal	8%	237,500	3328	200 TPH	71 TPH	0.24						25	25	25	25
RAW COAL CONVEYOR (Covered)	Coal	8%	858,000	3328	600 TPH	258 TPH	8.58						25	25	25	25
CRUSHED COAL CONVEYOR (Covered)	Coal	8%	858,000	3328	600 TPH	258 TPH	8.58						25	25	25	25
UNIT TRAIN LOADOUT CONVEYOR (Covered)	Coal	8%	858,000	858	1000 TPH	1000 TPH	8.58						25	25	25	25
RAW COAL STACKING TUBE	Coal	8%	858,000	3328	600 TPH	258 TPH	0.86						25	25	25	25
CRUSHED COAL STACKING TUBE	Coal	8%	858,000	3328	600 TPH	258 TPH	0.86						25	25	25	25
RAW COAL LOADOUT (Underground)	Coal	8%	858,000	3328	600 TPH	258 TPH	0.86						25	25	25	25

7/31/91

Form 5

Firm Name MOUNTAIN COAL COMPANY

Location C.V. SPUR PROCESSING FACILITY

Fugitive Emission Source Description (be specific)	Materials Used: Type	Materials Used: % Moisture Content	Materials Used: Quantity (Units/YR)	Operating Time Number of Hours /Yr	Production Units/hr: Design Rate	Production Units/hr: Average Actual Rate	Pollutants (Tons/Yr.): Particulates (Exp. Part)	Pollutants (Tons/Yr.): SO_x	Pollutants (Tons/Yr.): NO_x	Pollutants (Tons/Yr.): HC	Pollutants (Tons/Yr.): CO	Pollutants (Tons/Yr.): Other (Specify)	% Annual Production: Winter	% Annual Production: Spring	% Annual Production: Summer	% Annual Production: Fall
CLEAN COAL LOADOUT (Underground)	Coal	8%	858,000	858	1,000 TPH	1,000 TPH	0.86						25	25	25	25
UNIT TRAIN LOADOUT (Silo)	Coal	8%	858,000	172	5,000 TPH	5,000 TPH	0.86						25	25	25	25

Mountain Coal Co.
C.V. Spur Processing Facility
1990 Emission Inventory
Form 5 Calculations

Grizzly-Hopper

E = 0.002 lbs/ton × 858,000 TPY ÷ 2000 lbs/ton = 0.86 TPY

Roll Crusher

E = 0.002 lbs/ton × 237,500 TPY ÷ 2000 lbs/ton = 0.24 TPY

Raw Coal Conveyor

E = 0.02 lbs/ton × 858,000 TPY ÷ 2000 lbs/ton = 8.58 TPY

Crushed Coal Conveyor

E = 0.02 lbs/ton × 858,000 TPY ÷ 2000 lbs/ton = 8.58 TPY

Unit Train Loadout Conveyor

E = 0.02 lbs/ton × 858,000 TPY ÷ 2000 lbs/ton = 8.58 TPY

Raw Coal Stacking Tube

E = 0.002 lbs/ton × 858,000 TPY ÷ 2000 lbs/ton = 0.86 TPY

Crushed Coal Stacking Tube

E = 0.002 lbs/ton × 858,000 TPY ÷ 2000 lbs/ton = 0.86 TPY

Raw Coal Loadout

E = 0.002 lb/ton × 858,000 TPY ÷ 2000 lbs/ton = 0.86 TPY

C.V. Spur

Form 5 Continued

CRUSHED COAL LOADOUT

$E = 0.002\ lb/ton \times 858{,}000\ TPY \div 2000\ lbs/ton = \underline{0.86\ TPY}$

UNIT TRAIN LOADOUT

$E = 0.002\ lb/ton \times 858{,}000\ TPY \div 2000\ lbs/ton = \underline{0.86\ TPY}$

7/31/91

Form 5

Firm Name MOUNTAIN COAL COMPANY

Plant Location GORDON CREEK No. 8 MINE
(T. 13 S., R. 8 E., S.L.B.M.)

Fugitive Emission Source Description (be specific)	Materials Used: Type	Materials Used: % Moisture Content	Materials Used: Quantity (Units/YR)	Operating Time Number of Hours /Yr	Production Units/hr: Design Rate	Production Units/hr: Average Actual Rate	Pollutants (Tons/Yr.): Particulates (Fug. Dust)	Pollutants (Tons/Yr.): SO_x	Pollutants (Tons/Yr.): NO_x	Pollutants (Tons/Yr.): HC	Pollutants (Tons/Yr.): CO	Pollutants (Tons/Yr.): Other (Specify)	% Annual Production: Winter	% Annual Production: Spring	% Annual Production: Summer	% Annual Production: Fall
BELT TRANSFERS (2) (Enclosed)	Coal	8%	475,000	3120	500 TPH	152 TPH	0.95						25	25	25	25
COAL CONVEYOR (Covered)	Coal	8%	475,000	3120	500 TPH	152 TPH	4.50						25	25	25	25
DROP INTO STOCKPILE	Coal	8%	475,000	3120	500 TPH	152 TPH	4.50						25	25	25	25
LOADING INTO TRUCKS (LOADER)	Coal	8%	475,000	3120	—	152 TPH	7.54						25	25	25	25

MOUNTAIN COAL CO.
GORDON CREEK NO. 8 MINE
1990 EMISSION INVENTORY
FORM 5 CALCULATIONS

BELT TRANSFER (2)

$E = 0.002\ lbs/ton \times 475{,}000\ ton/yr. \times 2 \div 2000\ lbs/ton = \underline{0.95\ TPY}$

COAL CONVEYOR

$E = 0.02\ lb/ton \times 450{,}000\ ton/yr \div 2000\ lb/ton = \underline{4.50\ TPY}$

DROP INTO STOCKPILE

$E = 0.02\ lb/ton \times 450{,}000\ ton/yr. \div 2000\ lb/ton = \underline{4.50\ TPY}$

LOADING INTO TRUCKS

$E = 0.15 \times .33 \left(\frac{365-118}{365}\right) \times 450{,}000\ TPY \div 2000\ lb/ton = \underline{7.54\ TPY}$

Form 5

Firm Name: MOUNTAIN COAL COMPANY

Plant Location: TRAIL MOUNTAIN MINE

Fugitive Emission Source Description (be specific)	Materials Used: Type	Materials Used: % Moisture Content	Materials Used: Quantity (Units/YR)	Operating Time Number of Hours/Yr	Production Units/hr: Design Rate	Production Units/hr: Average Actual Rate	Pollutants (Tons/Yr.): Particulates (Eff. Dia.)	Pollutants (Tons/Yr.): SO_x	Pollutants (Tons/Yr.): NO_x	Pollutants (Tons/Yr.): HC	Pollutants (Tons/Yr.): CO	Pollutants (Tons/Yr.): Other (Specify)	% Annual Production: Winter	% Annual Production: Spring	% Annual Production: Summer	% Annual Production: Fall
Jeffrey Hammer Crusher (Covered)	Coal	7%	250,000	2080	500 ton per hour	120.2 tph	0.25						25	25	25	25
Stacker Belt (No Control)	Coal	7%	501,000	2080	1000 ton per hour	240.9 tph	5.01						25	25	25	25
Screen (Covered)	Coal	7%	501,000	2080	500 ton per hour	240.9 tph	0.50						25	25	25	25
Loading into Trucks	Coal	7%	501,000	2080	—	240.9 tph	8.39						25	25	25	25

Mountain Coal Co.
Trail Mountain Mine
1990 Emission Inventory
Calculations

Form 5

Crusher

$E = 0.002\ lbs/ton \times 250{,}000\ tpy \div 2000\ lbs/ton = \underline{0.25\ TP}$

Stacker Belt

$E = 0.02\ lbs/ton \times 501{,}000\ tpy \div 2000\ lbs/ton = \underline{5.01\ TPY}$

Screen

$E = 0.002\ lbs/ton \times 501{,}000\ tpy \div 2000\ lbs/ton = \underline{0.50\ TPY}$

Loading into Trucks

$E = 0.15 \times .33 \times \left(\frac{365-118}{365}\right) \times 501{,}000\ tpy \div 2000\ lbs/ton = \underline{8.39\ TPY}$

Date 7/31/91

FUGITIVE DUST

Mine Name MOUNTAIN COAL COMPANY

County CARBON

Mailing Address P.O. Box 1378, Price, Utah 84501

Form 11

Roads	Type (See Code)	Vehicle Miles Traveled	Average Vehicle Speed (MPH)	Control of Dust		Est. Emissions (Tons/Year)	% Annual Road Usage			
				Method	Number of Applications Per Year		Win	Spr	Sum	Fal
HAUL	Public 2	261,250	35	Chem. Stab. $MgCl_2$	3	12.89	25	25	25	25
HAUL	Public 3	332,500	50	Paved	—	14.06	"	"	"	"
HAUL	Public 3	250,500	50	Paved	—	10.59	"	"	"	"
ACCESS	Private 2	140,000	10	Chem. Stab. $MgCl_2$	3	9.40	"	"	"	"
Grading	Pub/Pri. 2	350 Hrs.	—	Watering	—	2.80	"	"	"	"

Road Type Codes: 1 - Dirt; 2 - Gravel; 3 - Paved

Pile Location 1- Gordon Creek No 8 Mine
2- C.V. Spur

Piles (Omit if not Applicable)

	Type of Material Stored	Average Amount Stored Tons/Year	Annual Thru-Put Tons/Year	Sieve Analysis/ Sizing Description	Content of Material		Type of Control Dust/Emissions	Est. Emissions (Tons/Yr.)	% Annual Thru Put of Storage Piles			
					% Moisture	% Silt			Win	Spr	Sum	Fal
1-	COAL	2,000	475,000	-8"	8%	5	None	0.05	25	25	25	25
2-	COAL	350,000	858,000	-2"	8%	5	Stacking Tubes	9.45	"	"	"	"

Date 7/31/91

FUGITIVE DUST

Mountain Coal Company

County Emery

Address P.O. Box 1378, Price, Utah 84501

Form 11

Roads	Type (See Code)	Vehicle Miles Traveled	Average Vehicle Speed (MPH)	Control of Dust		Est. Emissions (Tons/Year)	% Annual Road Usage			
				Method	Number of Applications Per Year		Min	Sep	Sum	Fal
Haul	Public 3	751,500	50	Paved	–	31.78	25	25	25	25
Access	Private 2	70,000	10	Chem. Stab. $MgCl_2$	3	4.70	"	"	"	"
Grading	Private 2	175 Hrs.	–	Watering	–	1.40	"	"	"	"

Type Codes: 1 - Dirt; 2 - Gravel; 3 - Paved

Pile Location Trail Mtn. Mine

Storage Piles (Omit if not Applicable)

Type of Material Stored	Average Amount Stored Tons/Year	Annual Thru-Put Tons/Year	Sieve Analysis/ Sizing Description	Content of Material		Type of Control Dust/Emissions	Est. Emissions (Tons/Yr.)	% Annual Thru Put of Storage Piles			
				% Moisture	% Silt			Min	Sep	Sum	Fal
Coal	2000	501,000	-2"	7%	5	None	0.05	25	25	25	25

Mountain Coal Co.
1990 Emission Inventory
Calculations for Form 11
(Carbon County)

Roads

1- Haul Road (2/7/8 Mines)

a. Public; Avg. Speed - 35 MPH

b. Gravel; $MgCl_2$ Treated; 75% Control

c. 11 Miles; 11,875 loads; 261,250 MPY

d. $E = \left(\frac{35}{60}\right)\left(\frac{365-118}{365}\right) \times 261{,}250 \text{ mi.} \times .25 \div 2000 = \underline{12.89 \text{ TPY}}$

2- Haul Road (2/7/8 Mines)

a. Public; Avg. Speed - 50 MPH

b. Paved; 85% Control

c. 14 Miles; 11,875 loads; 332,500 MPY

d. $E = \left(\frac{50}{60}\right)\left(\frac{365-118}{365}\right) \times 332{,}500 \times .15 \div 2000 = \underline{14.06 \text{ TPY}}$

3- Haul Road (Trail Mtn. Mine)

a. Public; Avg. Speed - 50 MPH

b. Paved; 85% Control

c. 10 Miles; 12,525 loads; 250,500 MPY

d. $E = \left(\frac{50}{60}\right)\left(\frac{365-118}{365}\right) \times 250{,}500 \times .15 \div 2000 = \underline{10.59 \text{ TPY}}$

4- Access Roads

a. Private; Avg. Speed - 10 MPH

b. Gravel; $MgCl_2$ Treated; 75% Control

c. 2 Miles; 140,000 MPY

d. $E = 0.6(.81 \times 15)\left(\frac{10}{30}\right)^2\left(\frac{247}{365}\right) \times 140{,}000 \times .25 \div 2000 = \underline{9.40 \text{ TPY}}$

Form 11 Continued

5- Road Repair / Grading

a. Public/Private ; 50% Control

b. E = 32 lb/hr. × 350 hrs. × .50 ÷ 2000 = 280 TPY

Storage Piles

1- No. 8 Mine Pile

a. 2000 ton avg.

b. E = 0.054 lb/ton × 2000 ton ÷ 2000 lb/ton = 0.05 TPY

* 2- Trail Mtn. Pile

a. 2000 ton avg.

b. E = 0.054 lb/ton × 2000 ton ÷ 2000 lb/ton = 0.05 TPY

3- C. V. Spur

a. 350,000 ton. avg.

b. E = 0.054 lb/ton × 350,000 ton ÷ 2000 lb/ton = 9.45 TPY

* Emery County

Form 11 Continued
(Emery County)

ROADS

1- Haul Road (Trail Mtn. Mine)

a. Public; Avg. Speed - 50 MPH

b. Paved; 85 % Control

c. 30 miles; 12,525 loads; 751,500 MPY

d. $E = \left(\frac{50}{60}\right)\left(\frac{365-118}{365}\right) \times 751{,}500 \times .15 \div 2000 =$ 31.78 TPY

2- Access Roads

a. Private; Avg. Speed - 10 MPH

b. Gravel; $MgCl_2$ Treated; 75 % Control

c. 1 Mile; 70,000 MPY

d. $E = 0.6(.81 \times 15)\left(\frac{10}{30}\right)^2\left(\frac{247}{365}\right) \times 70{,}000 \times .25 \div 2000 =$ 4.70 TPY

3- Road Repair/Grading

a. Private; 50 % Control

b. $E = 32$ lbs./hr. $\times$ 175 Hrs. $\times .50 \div 2000 =$ 1.40 TPY

Date 7/31/91

OFF HIGHWAY SOURCES
Form 12

Firm Name MOUNTAIN COAL CO.

County CARBON

Mailing Address P.O. BOX 1378, PRICE, UT. 84501

Mobile Sources	Number of Vehicles	Tons of Material Moved or Processed/Hr	Type of Material	Emission Controls: Type of Fugitive Dust Controls	Emission Controls: # Applications/Year	Usuage (Hrs/Year): Gasoline Powered	Usuage (Hrs/Year): Diesel Powered	Emissions (Tons/Year): Fugitive Dust	Emissions (Tons/Year) Engine: Particulate	Engine: SO_x	Engine: NO_x	Engine: HC	Engine: CO
Scraper		X											
Front End Loader	4	475,000	COAL	Chem. Stab. $MgCl_2$	3		1560	7.54	0.13	0.14	1.47	0.20	0.45
Shovel													
Bottom Dump Truck													
Dump Truck													
Dragline													
Grader	2	X	Gravel Roads	$MgCl_2$ / Water	3 / 80		350	2.80	0.01	0.02	0.12	0.01	0.03
Bulldozer (Track Type)		X											
Wheeled Dozers		X											
Tractors													
Rollers		X											
Other (Please Specify) WATER TRUCK	1	X	Water	Water	80		800	0.28	0.10	0.18	1.67	0.08	0.72

MOUNTAIN COAL CO.
1990 EMISSION INVENTORY
CALCULATIONS FOR FORM 12
CARBON COUNTY

FRONT END LOADERS

FUG. DUST – $0.15 \times .33 \times \left(\frac{247}{365}\right) \times 475{,}000 \div 2000 =$ 7.54 TPY
PARTICULATES – 0.172 lbs/hr. × 1560 hrs. ÷ 2000 = 0.13 TPY
SOx – 0.182 lbs/hr. × 1560 hrs. ÷ 2000 = 0.14 TPY
NOx – 1.89 lbs/hr. × 1560 hrs ÷ 2000 = 1.47 TPY
HC – 0.25 lbs/hr. × 1560 hrs ÷ 2000 = 0.20 TPY
CO – 0.572 lbs/hr × 1560 hrs ÷ 2000 = 0.45 TPY

GRADERS

FUG. DUST – 32 lbs/hr. × 350 hrs × .50 ÷ 2000 = 2.80 TPY
PARTICULATES – 0.061 lbs/hr × 350 hrs ÷ 2000 = 0.01 TPY
SOx – 0.086 lbs/hr × 350 hrs ÷ 2000 = 0.02 TPY
NOx – 0.713 lbs/hr × 350 hrs ÷ 2000 = 0.12 TPY
HC – 0.040 lbs/hr × 350 hrs ÷ 2000 = 0.01 TPY
CO – 0.051 lbs/hr × 350 hrs ÷ 2000 = 0.03 TPY

WATER TRUCK

FUG. DUST – $.6(.81 \times 15)\left(\frac{10}{30}\right)^2\left(\frac{247}{365}\right) \times 4200 \times .25 \div 2000 =$ 0.28 TPY
PARTICULATES – 0.256 lbs/hr. × 800 hrs. ÷ 2000 = 0.10 TPY
SOx – 0.454 lbs/hr × 800 hrs ÷ 2000 = 0.18 TPY
NOx – 4.166 lbs/hr × 800 hrs ÷ 2000 = 1.67 TPY
HC – 0.192 lbs/hr × 800 hrs ÷ 2000 = 0.08 TPY
CO – 1.794 lbs/hr × 800 hrs ÷ 2000 = 0.72 TPY

(Note: Figures based on TABLE II-7.1)

Date 1/31/91

OFF HIGHWAY SOURCES
Form 12

Firm Name MOUNTAIN COAL CO.

County EMERY

Mailing Address P.O. Box 1328, Price, Ut. 84501

Mobile Sources	Number of Vehicles	Tons of Material Moved or Processed/Hr	Type of Material	Emission Controls: Type of Fugitive Dust Controls	Emission Controls: # Applications/Year	Usage (Hrs/Year): Gasoline Powered	Usage (Hrs/Year): Diesel Powered	Emissions (Tons/Year): Fugitive Dust	Emissions (Tons/Year) Engine: Particulate	Engine: SO_x	Engine: NO_x	Engine: HC	Engine: CO
Scraper		X											
Front End Loader	2	501,000	COAL	Chem Stab. $MgCl_2$	2		2080	8.39	0.18	0.19	1.97	0.26	0.59
Shovel													
Bottom Dump Truck													
End Dump Truck													
Dragline													
Grader	1	X	Gravel Roads	Chem Stab. $MgCl_2$	2		175	1.40	0.01	0.01	0.06	0.004	0.01
Bulldozer (Track Type)		X											
Wheeled Dozers		X											
Tractors													
Rollers		X											
Other (Please Specify)													

MOUNTAIN COAL CO.
1990 EMISSION INVENTORY
CALCULATIONS FOR FORM 12
EMERY COUNTY

FRONT END LOADER

FUG. DUST - $0.15 \times .33 \times \left(\frac{247}{365}\right) \times 50{,}000 \div 2000 = 8.39$ TPY

PARTICULATES - 0.172 lbs/hr. × 2080 hrs. ÷ 2000 = 0.18 TPY

SOx - 0.182 lbs/hr × 2080 hrs ÷ 2000 = 0.19 TPY

NOx - 1.89 lbs/hr × 2080 hrs ÷ 2000 = 1.97 TPY

HC - 0.25 lbs/hr × 2080 hrs ÷ 2000 = 0.26 TPY

CO - 0.572 lbs/hr. × 2080 hrs ÷ 2000 = 0.59 TPY

GRADER

FUG. DUST - 32 lbs/hr × 175 hrs. × .50 ÷ 2000 = 1.40 TPY

PARTICULATES - 0.061 lbs/hr × 175 hrs ÷ 2000 = 0.01 TPY

SOx - 0.086 lbs/hr × 175 hrs ÷ 2000 = 0.01 TPY

NOx - 0.713 lbs/hr × 175 hrs ÷ 2000 = 0.06 TPY

HC - 0.040 lbs/hr × 175 hrs ÷ 2000 = 0.004 TPY

CO - 0.151 lbs/hr × 175 hrs ÷ 2000 = 0.01 TPY

(Note: Figures based on TABLE II-2.1)

August 23, 1990

On-Scene Coordinator
U.S. EPA Region VIII
Waste Management Division
Emergency Response Branch
999 18th St., Suite 500
Denver, CO 80202-2405

Re: **Continuous Release Reporting For Radionuclides**

Dear On-Scene Coordinator:

Pursuant to Section 103 of the Comprehensive Environmental Response Compensation and Liability Act ("CERCLA"), as amended, the Beaver Creek Coal Company ("BCCC") is submitting this report of potential radionuclide releases from its mining facilities, the Trail Mountain #9 Mine and the Gordon Creek #8 Mine, and its transportation facility, the CV Spur Loadout, all of which are located in east-central Utah. The CV Spur Loadout and the Gordon Creek #8 Mine are located respectively, about four miles southeast of Price, Utah and seventeen miles west of Highway 50 & 6. The Trail Mountain #9 Mine is located near Orangeville, Utah. This written report follows telephonic notification to the National Response Center. Although our review and evaluations do not indicate that a reportable quantity ("RQ") of radionuclides is actually released to any environmental media from the coal produced at BCCC's facilities, this report is submitted as a good faith effort to comply with the requirements of Section 103 and 40 CFR Part 302, as amended and interpreted by EPA on May 24, 1989 through promulgation of the final rule establishing reportable quantities for radionuclides (54 Fed. Reg. 22524).

In its discussion of that rule, (54 Fed. Reg. 22526), EPA responded to commenters' queries whether a CERCLA reportable release occurs when a material containing radionuclides is stockpiled outside of a building. EPA stated that:

> [t]he Agency considers the stockpiling of an RQ of a hazardous substance to be a release because any activity that involves placement of a hazardous substances into any unenclosed containment structure wherein the hazardous substance is exposed to the environment is considered a release. (footnote omitted)

BCCC does not agree with that interpretation of the Agency, and notes that this issue and others are presently being litigated. (The Fertilizer Institute v. the EPA, United States Court of Appeals for the District of Columbia Circuit, Docket No. 89-1404.) Nonetheless, BCCC has reviewed the EPA document dated February 15, 1989 and entitled Economic Impact Analysis for the Final Reportable Quantity Adjustments for Radionuclides under Section 102 of the Comprehensive Environmental Response, Compensation and Liability Act ("Economic Impact document"), including the following discussion from Pages A-6 and A-7 of Appendix A thereto:

> Based on average concentrations of radionuclides in coal, approximately 2,360 tons of coal contain an RQ of a mixture of naturally occurring uranium series and thorium series radionuclides in secular equilibrium. Any mine producing this quantity of coal on a daily basis may dump this amount outside on a daily basis and thus, be required to report release of radionuclides under CERCLA. Based on the average number of working days at coal mines throughout the United States, this daily production quantity can be converted to an annual figure:
>
> 224 days/year * 2,360 tons/day = 528,600 tons/year
>
> There are 363 mines in the United States with an annual production in excess of 500,000 tons. Although the

> operations of these facilities have not been characterized in great detail, it is reasonable to assume that these facilities may release an RQ of radionuclides by dumping or moving of coal on a regular basis. (footnote omitted)

BCCC questions the validity of the assumptions reflected in that discussion and at pages B-3 and B-4 of the Economic Impact document to determine that 2,360 tons of coal dumped on the ground would constitute a release of an RQ of radionuclides. A more reasonable method for calculating releases from stockpiles of coal at coal mines is that for calculating particulate releases to air as set forth on pages B-15 and B-16 of the Economic Impact document. On page B-15, the document states that:

> [t]ypical particulate releases to air from a "model" coal pile are reported as 610 kg <u>annually</u> for a 95,000 metric ton pile (EPA '78, p.2) . . . [and that] the size of pile needed to make this release pathway relevant . . . [is] 118,000,000,000 tons.

Any releases of radionuclides from coal mining operations in the arid west are most likely to be to the air, and therefore, this method of calculation would be more reasonably used to calculate radionuclides releases from stockpiles at those operations than the 2,360 ton/day production number.

Nonetheless, based on the Economic Impact document analysis in Appendix A and on information developed from production data and stockpiling practices for coal and overburden, there may be a potential release of a mixture of naturally occurring uranium and thorium series radionuclides in secular equilibrium from BCCC's facilities in an amount equal to or in excess of the recently

established reportable quantities. Based on the rule and EPA's Economic Impact document, including the discussion at page 4-10, BCCC believes that if any such release is occurring, it would qualify for the reduced reporting requirements of CERCLA Section 103(f)(2) as a continuous and stable release in quantity and rate. Consequently, this report, including the attachment, provides information consistent with the discussion of continuous release reporting on pages 4-11 to 4-14 of that document.

There is no emergency, and no emergency response is required. The criteria used by EPA to exempt coal and coal ash stockpiles at utilities from the reporting requirement indicates that it is unlikely that any hazard is posed either to public health or the environment from coal or overburden stockpiles or related activities at BCCC's facilities. It is also unlikely that any realistic response action could or would be taken for such a release. In fact, EPA's Economic Impact document, at page 4-16, states its assumption that such continuous releases, which would occur regularly "from large quantities of materials incidental to normal operations, . . . are unlikely to provoke or require an immediate response action . . . [and] therefore that facilities that release radionuclides continuously will not respond to or cleanup these releases."

Although this report is intended to provide you with adequate information regarding such potential radionuclides releases, we recognize that such releases do not lend themselves to the format typically used for reporting an actual release. Consequently, should you deem this report inadequate, please advise as to specific action and information which you require. BCCC intends to submit a subsequent annual release report on or before July 24, 1991, pursuant to the provisions of Section 103(f)(2) for "continuous" releases.

The information contained in this report is accurate and current to the best of my knowledge.

Respectfully Submitted:
R. Jay Marshall for

Dan W. Guy
Mgr. Permitting/Compliance
(801) 637-5050

Attachment

c: Commander Speight
National Response Center
Coast Guard Headquarters
Room 2611
2100 2nd Street Southwest
Washington, D.C. 20593-0001

Neil Taylor
Division of Environmental Health
288 N. 1460 West
Salt Lake City, UT 84116

Steve Raber
Carbon County Sherrif's Office
Court House
Price, Utah 84501

BEAVER CREEK Coal Company
Post Office Box 1378
Price, Utah 84501
Telephone 801 637-5050

August 28, 1990

On-Scene Coordinator
U.S. EPA Region VIII
Waste Management Division
Emergency Response Branch
999 18th St., Suite 500
Denver, CO 80202-2405

Re: **Continuous Release Reporting For Radionuclides**

Dear On-Scene Coordinator:

Please replace the attachment to the initial written report dated August 23, 1990, with the enclosed attachment.

If you have any questions or concerns please call Dan W. Guy (801) 637-5050.

Respectfully,

Dan W. Guy
Mgr. Permitting/Compliance

ATTACHMENT TO INITIAL WRITTEN REPORT REGARDING POTENTIAL RELEASES OF RADIONUCLIDES FROM COAL OPERATIONS

(1) This attachment was prepared in a format consistent with that in the proposed continuous releases rule, as published in the July 24, 1990 Federal Register at page 30166, which is to be in effect 60 days there after. The name of the facility; the location, including the longitude and latitude; the case number assigned by the NRC or EPA; the name and telephone number of the person in charge of the facility or vessel.

Facility	C.V. Spur	Trail Mountain No. 9 Mine	Gordon Creek No. 8 Mine
Location	Four miles South East of Price, Ut Section 11 T15S, R10E	Orangeville, Ut Sections 25 & 26 T17S, R6E SLB&M	Seventeen miles West of US 50&6 T13S, R9E SLB&M
Longitude	110° 47'	111° 13'	111° 05'
Latitude	39° 30'	39° 16'	39° 43'
Case Number	32753	32750	32745
Name and Telephone Number of Responsible Person:		Dan W. Guy (801) 637-5050	

(2) The population density within a one-mile radius of the facility described in terms of the following ranges: 0-50 persons, 51-100 persons, 101-500 persons, 501-1000 persons, more than 1,000 persons.

Trail Mountain No. 9 Mine	0-50
Gordon Creek No. 8 Mine	0-50
C.V. Spur Loadout	0-50

(3) The identity and location of sensitive populations and ecosystems within a one-mile radius of the facility (e.g., elementary schools, hospitals, retirement communities, or wetlands).

There are no known sensitive populations or ecosystems within a one-mile radius of either the Trail Mountain No. 9 mine, Gordon Creek No. 8 Mine, or the C.V. Spur facilities.

(4) The name/identity of the hazardous substance; the Chemical Abstracts Service Registry Number for the substance (if available).

A potential release of a mixture of Uranium-238 series and Thorium-232 series radionuclides, as naturally occurring in secular

equilibrium in coal excavated during coal mining operations. There is no CASRN for such a mixture.

(5) The upper and lower bounds of the normal range of the release (in Reportable Quantity) over the previous year. Based on Tons of coal mined.

	Uranium Series Radionuclides (RQ)	Thorium Series Radionuclides (RQ)	Total Radionuclides (RQ)
C.V. Spur (Upper Bound)	0.60	2.00	2.60
C.V. Spur (Lower Bound)	0.02	0.06	0.08
Trail Mountain No. 9 (Upper)	0.30	1.00	1.30
Trail Mountain No. 9 (Lower)	0.01	0.03	0.04
Gordon Creek No. 8 (Upper)	0.30	1.00	1.30
Gordon Creek No. 8 (Lower)	0.01	0.03	0.04

(6) The source(s) of the release (e.g., valves, pump seals, storage tank vents, stacks). The source of the release is through coal mining operations.

(7) The frequency of the release and the fraction of the release from each release source and the specific period over which it occurs.

The specific period for this report is July 24, 1989 through July 24, 1990. The frequency of the release is continuous and stable.

(8) A brief statement describing the basis for stating that the release is continuous and stable in quantity and rate.

The basis for reporting this potential release as "continuous and stable" is due to the regular mining activities occurring at the Beaver Creek Coal Company Operations. The potential release is "continuous" and "stable" because it occurs "predictably and regularly" during the excavation, stockpiling, transportation and other such regular activities associated with the operations at our facilities.

(9) An estimate of the total annual amount of the hazardous substance released in the previous year, based on tons of coal.

	Uranium Series Radionuclides	Thorium Series Radionuclides	Total Radionuclides
C.V. Spur	21.62	65.56	65.56
Trail Mountain No. 9 Mine	48.82	148.36	197.18
Gordon Creek No. 8 Mine	60.13	182.50	242.63

(10) The environmental medium affected by the release.

Our evaluations do not indicate that such radionuclides actually are being released to any environmental medium. Based on EPA's interpretation of the May 24, 1989 rule regarding radionuclides and EPA's background documents for that rule (particularly the Economic Impact Analysis document which evaluates coal piles at public utilities), however, it appear that if such releases are occurring, the medium most likely affected is air.

eaver Creek Coal Company
roduction and Shipping Figures
1990

	Number 9 Mine					Number 7 & 8 Mine					Beaver Creek Coal Total Property	
	State	Federal	Federal	Tons	Tons	#7 & #8 Federal	#8 Columbo	#7 Federal	Tons	Tons	Tons	Tons
onth	U-22603	U-49332	U-82996	Prod.	Ship.	U-53159	Fee	U-8319	Prod.	Ship.	Prod.	Ship.
anuary		42,455		42,455	34,226	30,614	16,461		47,075	40,197	89,530	74,423
ebruary		38,604		38,604	39,875	44,023			44,023	21,651	82,627	61,526
arch		45,251		45,251	40,553	42,862			42,862	30,103	88,113	70,656
pril		45,220		45,220	33,174	46,951	3,382		50,333	34,339	95,553	67,513
ay		46,058		46,058	29,983	53,911	14,806		68,717	35,786	114,775	65,769
une		27,644	8,592	36,236	16,723	34,475	4,572		39,047	15,761	75,283	32,484
uly		27,765	10,020	37,785	21,713	28,157	3,970		32,127	49,997	69,912	71,710
ugust												
eptember												
ctr												
ovember												
ecember												
ear to ate Total	0	272,997	18,612	291,609	216,247	280,993	43,191		324,184	227,834	615,793	444,081

:c:

D. Pick
G. Nass
A. Gaueielle
J. Coffey
B. Biersdorf
D. Strong
File 1-5-4

:\jay

291,609
329,184
620,793

+

VEGETATION MONITORING

VEGETATION MONITORING

OF THE

C.V. SPUR NO. 1 TEST PLOT: 1991

Prepared by

MT. NEBO SCIENTIFIC RESEARCH & CONSULTING
330 East 400 South, Suite 6
Post Office Box 337
Springville, Utah 84663

(801) 489-6937

for

MOUNTAIN COAL COMPANY
P.O. Box 1378
Price, Utah 84501

Report: Patrick Collins, Ph.D.

Fieldwork: Patrick Collins
Dean Collins

Report Date: January 1992

VEGETATION MONITORING
OF THE
C.V. SPUR NO.1 TEST PLOTS: 1991

SCOPE

The following is a report to describe the fourth year results of ecological monitoring of the reclamation test plot at the C.V. Spur No. 1 site. This plot was established by Beaver Creek Coal Company (now Mountain Coal Company), Price, Utah. Monitoring methodologies were performed in accordance with the guidelines supplied by the State of Utah, Division of Oil, Gas and Mining (DOGM).

INTRODUCTION

General Site Description

The C.V. Spur area is located approximately 4 miles southeast of Price in Carbon County, Utah. As described in previous reports, the area is comprised of nearly 120 acres of

disturbed land associated with coal cleaning activities. The disturbed areas lie within a salt desert community on soils derived from Mancos Shale.

Revegetation test plots designed to investigate different treatments were established in the fall of 1987 by Beaver Creek Coal Company. The total plot size is approximately 120 ft by 140 ft. This area was divided into sixteen 25 ft by 25 ft "subplots" to test different reclamation treatments. The treatments consisted of comparing controls, topsoil depths, coarse refuse mixtures and mulches. More specifically, the treatments investigated with their respective subplot numbers are listed below.

SUBPLOT NUMBER	TREATMENT
1, 9	6 in. soil, seed, (control)
2, 6	6 in. soil, seed, wood fiber mulch
3, 7	4 in. soil, 2 in. coal refuse, seed, wood fiber mulch
4, 8	3 in. soil, 3 in. coal refuse, seed, wood fiber mulch
5	6 in. soil, wood fiber mulch, (strip planting)
10, 14	6 in. soil, seed, hay mulch
11, 15	4 in. soil, 2 in. coal refuse, seed, hay mulch
12, 16	3 in. soil, 3 in. coal refuse, seed, hay mulch
13	6 in. soil, hay mulch, (strip planting)

Sampling in 1991

This was the fourth year of monitoring for the C.V. Spur No. 1 Test Plot. The sampling schedule indicated qualitative sampling only was to be conducted on the fourth year. Sampling methodologies and results are described below.

METHODS

Sampling was conducted prior to the first frost of the area. The date of sampling was October 8, 1991. Qualitative sampling was conducted on the site including: observer names, slope, exposure, animal use and disturbance, erosion problems, approximate living ground cover, and plant species observed. Additionally, pertinent notes about the plot were also taken at the time of sampling.

RESULTS

Results of the sampling are shown on the "Qualitative Sampling Data Sheet", included in this report. A color photograph of the test plot is included in this report.

M T. N E B O S C I E N T I F I C
p.o. box 337, 330 east 400 south, suite #6,
springville, utah 84663
(801) 489-6937

QUALITATIVE SAMPLING DATA SHEET
AND
QUANTITATIVE/QUALITATIVE NOTES

SITE NAME: C.V. Spur #1

MINE SITE: Loadout area

COMPANY: Mountain Coal Company

DATE: October 8, 1991

WORKERS: P. Collins, D. Collins

SLOPE: 1 deg.

EXPOSURE: North

ANIMAL USE/DISTURBANCE: Slight

EROSION: none

COVER: Approx. 3-15 percent, depending on cell.

DOMINANT PLANT SPECIES OBSERVED:
Ceratoides lanata
Atriplex canescens
Atriplex confertifolia

Halogeton glomeratus
Salsola iberica
Bassia hyssopifolia
Sphaeralcea grossulariifolia

Elymus lanceolatus
Agropyron cristatum
Stipa hymenoides
Hilaria jamesii

NOTES: There were no obvious visual differences from what we remembered the plot to look from last years' sampling.

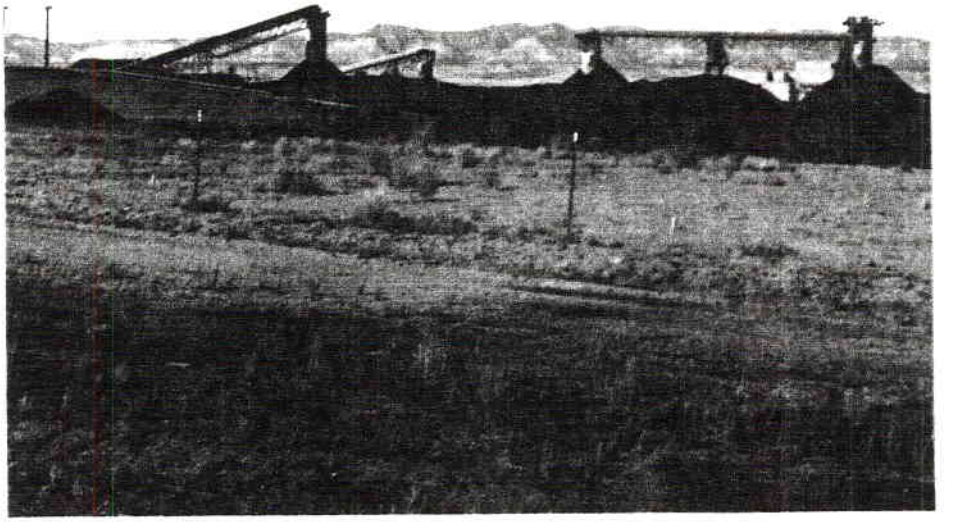

C.V. Spur No. 1 Test Plot. Mountain Coal Company
October 8, 1991

VEGETATION MONITORING

OF THE

C.V. SPUR NO. 2 TEST PLOT: 1991

Prepared by

MT. NEBO SCIENTIFIC RESEARCH & CONSULTING
330 East 400 South, Suite 6
P.O. Box 337
Springville, Utah 84663
(801) 489-6937

for

MOUNTAIN COAL COMPANY
P.O. Box 1378
Price, Utah 84501

Report: Patrick Collins, Ph.D.

Fieldwork: Patrick Collins
Dean Collins

Report Date: January 1992

VEGETATION MONITORING

OF THE

C.V. SPUR NO. 2 TEST PLOT: 1991

INTRODUCTION

In the fall of 1989, Beaver Creek Coal Company implemented a reclamation test plot on a disturbed area in the NE corner of the C.V. Spur Coal Processing and Loadout Facility property. *MT. NEBO SCIENTIFIC* was contracted to monitor this plot.

The test plot was divided into two larger sections for seeding mixtures, plus a middle section for single species. The plot was also fenced.

Section 1 (west)

This is a 50 ft. by 100 ft. area. Design included techniques proposed for final reclamation methodologies as outlined in Chapter 3, Section 3.5 of the MRP. A species list is included in this report.

Section 2 (east)

This is another 50 ft. by 100 ft. section utilizing the same methods as Section 1 with the addition of 1 ton of 3rd crop alfalfa hay tilled into the top 6 inches of the soil. A species list is included in this report.

Section 3 (middle)

This section was apparently seeded with single species with two controls that were not seeded.

METHODS

Quantitative and qualitative data were taken on the subplots of the C.V. Spur No. 2 Test Plot. Sampling was accomplished on October 8, 1991, prior to the first frost.

Cover and Composition

Regular placement of sample points were predetermined to provide unbiased accuracy of the data compiled. This was accomplished by establishing transect lines at regular intervals on each end of the plots. These transect lines were placed over the entire study area to adequately represent the area as a whole. Regular points on the transect lines were then marked. From these marks, the sample points were determined by random distance numbers at right angles to the transect lines.

Cover estimates were made using ocular methods with meter square quadrats. Species composition and relative frequencies were also assessed from the quadrats. Additional information recorded on data sheets were: estimated precipitation, slope, exposure, grazing use, animal disturbance and other appropriate notes. Plant nomenclature follows Welsh et al. (1987) for nonplanted species. To avoid confusion, the same names were used as when they were planted for the species in the seed mixtures.

Woody Species Density

Because woody species densities were very low, all individuals were counted in each subplot.

Sample Adequacy

Sample adequacy was achieved employing formulas supplied by DOGM. These formulas are shown on the summary tables.

Photographs

A color photograph was taken of the plot and was included in this report.

RESULTS

Section 1 (west side)

Total living cover for this subplot was estimated at 11.33%. The cover was composed primarily of forbs (Table 1). As shown on Table 2, most of this cover was summer cypress (*Kochia scoparia*), a weedy annual. However, there were also some grasses beginning to establish.

Woody species density was estimated at 8.71 individuals per acres by total counts.

Section 2 (east side)

Total living cover for Section 2 was estimated as 18.83%, most of which were forbs, but had a fair representation of grasses (Table 3). Table 4 shows the cover by species which, although cannot be considered as "good", appears somewhat better than Section 1. The most common species represented in the quadrats were summer cypress and crested wheatgrass (*Agropyron cristatum*) with cover estimates of 11.17% and 4.94%, respectively.

Woody species density was measured at 26.14 individuals per acre.

Section 3 (middle)

The single species that were planted have shown almost no success to date. The only species observed were one gooseberryleaf globemallow (*Sphaeralcea grossulariaefolia*) and two Gt. Basin wildrye plants (*Elymus cinereus*).

TABLE 1: Summary of 1991 sampling for Mountain Coal Company. The table shows the total cover and composition for the C.V. Spur No. 2 Revegetation Test Plot (Sec.1/west side). The table includes the mean percent cover and composition with standard deviations and sample sizes.

TOTAL COVER	**% MEAN COVER**	**STANDARD DEVIATION**	**SAMPLE SIZES**
Living Cover	11.33	10.56	18
Litter	2.17	1.30	18
Bareground	85.00	11.25	18
Rock	1.50	0.90	18
COMPOSITION			
Trees & Shrubs	0.00	0.00	18
Forbs	77.22	27.13	18
Grasses	22.78	27.13	18

* Sample size insures adequate number of samples using the formula below approved by State of Utah, Division of Oil, Gas, & Mining.

Nmin = (t squared X S squared) / 25

where Nmin = minimum adequate samples required for the population
t = the t-value at 80% confidence,
S = the sample standard deviation

TABLE 2: Summary of 1991 sampling for Mountain Coal Company. The table shows the cover and frequency by species for the C.V. Spur No. 2 Revegetation Test Plot (Sec.1/west side). The table includes the mean percent cover, standard deviation, sample size and relative frequency.

SPECIES	% MEAN COVER	STANDARD DEVIATION	SAMPLE SIZE	RELATIVE FREQUENCY
FORBS				
Kochia scoparia	8.83	9.32	18	94.44
GRASSES				
Agropyron cristatum	2.44	2.81	18	55.56
Agropyron dasystachyum	0.06	0.23	18	5.56

TABLE 3: Summary of 1991 sampling for Mountain Coal Company. The table shows the total cover and composition for the C.V. Spur No. 2 Revegetation Test Plot (Sec.2/east side). The table includes the mean percent cover and composition with standard deviations and sample sizes.

TOTAL COVER	% MEAN COVER	STANDARD DEVIATION	SAMPLE SIZES
Living Cover	18.83	17.46	18
Litter	4.94	2.20	18
Bareground	75.22	17.79	18
Rock	1.00	0.47	18
COMPOSITION			
Trees & Shrubs	0.00	0.00	18
Forbs	69.51	24.11	18
Grasses	30.49	24.11	18

* Sample size insures adequate number of samples using the formula below approved by State of Utah, Division of Oil, Gas, & Mining.

Nmin = (t squared X S squared) / 25

where Nmin = minimum adequate samples required for the population
t = the t-value at 80% confidence,
S = the sample standard deviation

TABLE 4: Summary of 1991 sampling for Mountain Coal Company. The table shows the cover and frequency by species for the C.V. Spur No. 2 Revegetation Test Plot (Sec.2/east side). The table includes the mean percent cover, standard deviation, sample size and relative frequency.

SPECIES	% MEAN COVER	STANDARD DEVIATION	SAMPLE SIZE	RELATIVE FREQUENCY
FORBS				
Halogeton glomeratus	0.33	0.82	18	16.67
Kochia scoparia	11.17	10.98	18	100.00
Penstemon palmeri	0.11	0.46	18	5.56
Sphaeralcea grossulariifolia	0.28	1.15	18	5.56
GRASSES				
Agropyron cristatum	4.94	6.64	18	61.11
Agropyron dasystachyum	1.78	2.86	18	33.33

Table 5: Seed mixture used for the C.V. Spur No. 2 Test Plot.

Sections 1 and 2

#PLS/A	Rate
SHRUBS	
Atriplex confertifolia	2.0
Eurotia lanata	1.0
FORBS	
Sphraeralcea grossulariaefolia	.25
Helianthus annuus	3.0
Penstemon palmeri	.5
Melilotus officinalis	1.0
Kochia prostrata	1.0
GRASSES	
Agropyron dasystachyum	2.0
Agropron cristatum ephraim	2.0
Orysopsis hymenoides	4.0
Agropyron cristatum fairway	2.0
Elymus junceus	1.0
Sitanion hystrix	.5

Section 3

Single spp. planted in 10 ft. strips: clover, winterfat, globemallow, shadscale, sunflower, kochia, Russian wildrye, crested wheatgrass, squirreltail, thickspike, Palmer penstemon, Indian ricegrass.

C.V. Spur No. 2 Plot. Mountain Coal Company
October 8, 1991

ANNUAL

IMPOUNDMENT

CERTIFICATIONS

POND INSPECTION REPORT

(1991 ANNUAL INSPECTION)

POND: No. 1 LOCATION: C.V. SPUR

ITEM	REMARKS
(1) Potential Safety Hazards	None Noted.
(2) Slope Stability	Stable; Pond Incised; Slopes ½:1 to vert. inside.
(3) Erosion	None Visible.
(4) Construction and Maintenance Performance Standards	Pond resurveyed in Nov. 1991. Sed. level 2' from Cleanout Point. Volume - 1.40 ac. ft.
(5) Recommendations/Comments	None ~25" water (ice). No Discharge

I have performed the above inspection on this pond and do hereby certify it to be a true and accurate representation of the pond at this time.

REGISTERED PROFESSIONAL ENGINEER
No. 4548
DAN W. GUY
STATE OF UTAH

12/16/91
Date

POND INSPECTION REPORT
(1991 ANNUAL INSPECTION)

POND: No. 2 LOCATION: C.V. SPUR

ITEM	REMARKS
(1) Potential Safety Hazards	NONE NOTED.
(2) Slope Stability	Stable; Pond Incised; Inside Slopes ½:1 to Vertical.
(3) Erosion	None Noted.
(4) Construction and Maintenance Performance Standards	Pond Resurveyed in Nov. 1991. Sediment level 2' below Cleanout Point. Volume - 0.96 ac. ft.
(5) Recommendations/Comments	None; Inlet/Outlet structures redone in 1991. Pond Dry - No Discharge.

I have performed the above inspection on this pond ~~and do~~ hereby certify it to be a true and accurate representation of the pond at this time.

REGISTERED PROFESSIONAL ENGINEER No. 4540 DAN W. GUY STATE OF UTAH

12/16/91
Date

POND INSPECTION REPORT
(1991 ANNUAL INSPECTION)

POND: No. 3 LOCATION: C.V. SPUR

ITEM	REMARKS
(1) Potential Safety Hazards	None Noted.
(2) Slope Stability	Stable; Pond Incised; Inside Slopes 1/2:1 to Vertical.
(3) Erosion	None Noted.
(4) Construction and Maintenance Performance Standards	Pond Resurveyed in Nov. 1991. Sed. Level 1.6' below Cleanout Point. Volume - 0.94 ac. ft.
(5) Recommendations/Comments	None; Inlet/Outlet Structures redone in 1991. Pond Dry - No Discharge.

I have performed the above inspection on this pond and do hereby certify it to be a true and accurate representation of the pond at this time.

REGISTERED PROFESSIONAL ENGINEER
No. 4548
DAN W. GUY
STATE OF UTAH

12/16/91
Date

POND INSPECTION REPORT
(1991 ANNUAL INSPECTION)

POND: No. 4 (Plant Overflow) LOCATION: C.V. SPUR

ITEM	REMARKS
(1) Potential Safety Hazards	None Noted.
(2) Slope Stability	Stable ; Pond Incised.
(3) Erosion	None Noted.
(4) Construction and Maintenance Performance Standards	N/A - Not a Sediment Pond. Carries Plant Overflow Water Only. Pond Volume - 0.28 ac. ft.
(5) Recommendations/Comments	Water level at outflow pipe. Minor discharge to Pond 6.

I have performed the above inspection on this pond ~~and do~~ hereby certify it to be a true and accurate representation of the pond at this time.

REGISTERED PROFESSIONAL ENGINEER
No. 4548
DAN W. GUY
STATE OF UTAH

12/16/91
Date

POND INSPECTION REPORT
(1991 ANNUAL INSPECTION)

POND: No. 5 LOCATION: C.V. SPUR

ITEM	REMARKS
(1) Potential Safety Hazards	None Noted.
(2) Slope Stability	Stable - Pond Incised.
(3) Erosion	None Noted.
(4) Construction and Maintenance Performance Standards	Pond Resurveyed / New Spillway - Dec. 1991. Sed. Level 1.9' from Cleanout Point. Volume - 4.16 ac. ft.
(5) Recommendations/Comments	Approx. 3' of water in pond. (Ground Water Level). No Discharge.

I have performed the above inspection on this pond and do hereby certify it to be a true and accurate representation of the pond at this time.

REGISTERED PROFESSIONAL ENGINEER No. 4548 DAN W. GUY STATE OF UTAH

12/16/91
Date

POND INSPECTION REPORT
(1991 ANNUAL INSPECTION)

POND: No. 6 LOCATION: C.V. Spur

ITEM	REMARKS
(1) Potential Safety Hazards	None Noted.
(2) Slope Stability	Stable - Pond Incised. Inside Slopes ½:1 to Vertical.
(3) Erosion	None Noted.
(4) Construction and Maintenance Performance Standards	Pond Resurveyed / Open Channel Overflow added in Dec. 1991 Sediment Level 1.2' below Cleanout Point.
(5) Recommendations/Comments	Pond Volume - 2.15 Ac. Ft. Pond Contained approx. 3' Water (ice.). No Discharge.

I have performed the above inspection on this pond and do hereby certify it to be a true and accurate representation of the pond at this time.

[signature]

12/16/91
Date

REGISTERED PROFESSIONAL ENGINEER
No. 4548
DAN W. GUY
STATE OF UTAH

REFUSE

PILE

INSPECTIONS

Mountain Coal Company **Internal Correspondence**

Date: March 25, 1992

Subject: **Refuse Pile Construction - C.V. Spur**

From/Location: D.W. Guy

To/Location: File

I, Dan W. Guy, Registered Professional Engineer, State of Utah No. 4548, hereby certify that I am experienced in the construction of similar earth and waste structures to the refuse pile at C.V. Spur, and that I designed the pile and have inspected the pile at regular intervals during construction checking both placement and compaction.

Inspections have been made quarterly throughout construction and at critical construction periods, including: the removal of organic material, topsoil and subsoil; installation of vegetation test plots; and regrading. The pile has no underdrains or protective filter systems; however, shallow water monitoring wells are placed at key locations around the pile, and are monitored at regular intervals.

A certified report is provided to the Division promptly after each inspection that the refuse pile has been constructed and maintained as designed and in accordance with the approved plan and R645 Rules. This report includes appearances of instability, structural weakness and other hazardous conditions. A copy of each inspection report is retained at the main office.

It should be noted that the construction of the refuse pile was started prior to the time the loadout was required to be permitted; however, topsoil and sub-soil were salvaged and the pile foundation was prepared in anticipation of permitting requirements.

REGISTERED PROFESSIONAL ENGINEER
No. 4548
DAN W. GUY
3/25/92
STATE OF UTAH

REFUSE PILE INSPECTION REPORT

MSHA SITE #1211-UT-9-0034 C.V. SPUR QUARTER 4/91

ITEM	REMARKS
(1) Potential Safety Hazards	None Noted.
(2) Slope Stability	Stable - Slopes regraded. Contours removed. Berm around entire top of pile.
(3) Removal of Topsoil and Organics	N/A - Test plot monitoring completed - results not yet available.
(4) Construction and Maintenance Performance Standards	Good - Entire top regraded. Drains to culvert on NE corner. Ditches constructed for 100yr.-6hr. event.
(5) Recommendations	Pile looks good. Continue placement of material to provide drainage. Maintain berm.

I have performed the above inspection on this refuse pile and do hereby certify it to be a true and accurate representation of the pile at this time.

Registered Professional Engineer

11/26/91
Date

REGISTERED PROFESSIONAL ENGINEER
No. 3548
DAN W. GUY
STATE OF UTAH

REFUSE PILE INSPECTION REPORT

MSHA SITE #1211-UT-9-0034 C.V. SPUR QUARTER 3/91

ITEM	REMARKS
(1) Potential Safety Hazards	None Noted.
(2) Slope Stability	Stable - Berm around top reinforced. Contoured slopes will be regraded.
(3) Removal of Topsoil and Organics	N/A - Test plots show minor success.
(4) Construction and Maintenance Performance Standards	O.K. - Top looks good. Some silting on side-slope contours.
(5) Recommendations	Grade out side slopes. Make sure top berm is intact. Grade top to drain to NE corner.

I have performed the above inspection on this refuse pile and do hereby certify it to be a true and accurate representation of the pile at this time.

REGISTERED PROFESSIONAL ENGINEER No 4548 DAN W. GUY STATE OF UTAH

Registered Professional Engineer

9/25/91

Date

REFUSE PILE INSPECTION REPORT

MSHA SITE #1211-UT-9-0034 C.V. SPUR QUARTER 2/91

ITEM	REMARKS
(1) Potential Safety Hazards	None
(2) Slope Stability	Stable - Slopes graded & contoured. Berm installed along top of pile.
(3) Removal of Topsoil and Organics	N/A - Test plot growth marginal, but best on area mixed w/refuse.
(4) Construction and Maintenance Performance Standards	Good - Regrading and slope contouring finished.
(5) Recommendations	None - Pile looks good. Slight depression on west end can be filled in w/raw material.

I have performed the above inspection on this refuse pile and do hereby certify it to be a true and accurate representation of the pile at this time.

REGISTERED PROFESSIONAL ENGINEER No. 4548 DAN W. GUY STATE OF UTAH

Registered Professional Engineer

6/20/91
Date

REFUSE PILE INSPECTION REPORT

MSHA SITE #1211-UT-9-0034 C.V. SPUR QUARTER 1/91

ITEM	REMARKS
(1) Potential Safety Hazards	None
(2) Slope Stability	Stable - Slopes Graded
(3) Removal of Topsoil and Organics	N/A. - Test Plot results submitted with annual report.
(4) Construction and Maintenance Performance Standards	O.K. - Soil material from Trail Mountain Mine mostly graded out.
(5) Recommendations	None - Pile looks good. Grade as needed.

I have performed the above inspection on this refuse pile and do hereby certify it to be a true and accurate representation of the pile at this time.

Registered Professional Engineer

3/14/91
Date

REGISTERED PROFESSIONAL ENGINEER No. 4548 DAN W. GUY STATE OF UTAH

COAL / REFUSE

ANALYSES

COMMERCIAL TESTING & ENGINEERING CO.
GENERAL OFFICES: 1919 SOUTH HIGHLAND AVE., SUITE 210-B, LOMBARD, ILLINOIS 60148 • (708) 953-9300
SINCE 1908
Member of the SGS Group (Societe Generale de Surveillance)

PLEASE ADDRESS ALL CORRESPONDENCE TO:
P.O. BOX 1020, HUNTINGTON, UT 84528
TELEPHONE: (801) 653-2311
FAX: (801) 653-2479

April 10, 1991

Beaver Creek Coal Co.
P.O. Box 1378
Price Utah 84501

Sample identification by
Beaver Creek Coal Co.

Kind of sample reported to us Coal

Genwal
30 Hole Auger

Sample taken at CV SPUR

Sample taken by CT&E

Date sampled March 26, 1991

Date received March 26, 1991

Analysis report no. 59-128870

ACID BASE POTENTIAL

Neutralization Potential	76.25	tons $CaCO_3$ equivalent/1000 tons
Maximum Acid Potential	15.31	tons $CaCO_3$ equivalent/1000 tons
Net Acid Base Potential	60.94	tons $CaCO_3$ equivalent/1000 tons

Respectfully submitted,
COMMERCIAL TESTING & ENGINEERING CO.

Manager, Huntington Laboratory

COMMERCIAL TESTING & ENGINEERING CO.
GENERAL OFFICES: 1919 SOUTH HIGHLAND AVE., SUITE 210-B, LOMBARD, ILLINOIS 60148 • (708) 953-9300
SINCE 1908
Member of the SGS Group (Societe Generale de Surveillance)

PLEASE ADDRESS ALL CORRESPONDENCE TO:
P.O. BOX 1020, HUNTINGTON, UT 84528
TELEPHONE: (801) 653-2311
FAX: (801) 653-2479

April 10, 1991

Beaver Creek Coal Co.
P.O. Box 1378
Price Utah 84501

Sample identification by
Beaver Creek Coal Co.

Kind of sample reported to us Coal

No. 8 Mine Stockpile
West Slope
12 Hole Auger

Sample taken at CV SPUR

Sample taken by CT&E

Date sampled March 26, 1991

Date received March 26, 1991

Analysis report no. 59-128871

ACID BASE POTENTIAL

Neutralization Potential	6.25	tons $CaCO_3$ equivalent/1000 tons
Maximum Acid Potential	22.81	tons $CaCO_3$ equivalent/1000 tons
Net Acid Base Potential	-16.56	tons $CaCO_3$ equivalent/1000 tons

Respectfully submitted,
COMMERCIAL TESTING & ENGINEERING CO.

Manager, Huntington Laboratory

Inter-Mountain
Laboratories, Inc.

2506 West Main Street
Farmington, New Mexico 87401
Tel. (505) 326-4737

December 18, 1990

Beaver Creek Coal Company
P.O. Box 1378
Price, Utah 84501

Attn: Dan Guy

Dear Mr. Guy:

Enclosed are the results of the analysis on the sample we received November 9, 1990. The analysis was conducted according to the UDOGM Guidelines, Table 6.

If you have any questions or we can be of any further service, please call. Thank you.

Sincerely,

Mary Stepp

Mary Stepp
Soil Director

Enc.
MS/mds

xc: File

Inter-Mountain Laboratories, Inc.

2506 West Main Street Farmington, New Mexico 87401 Tel. (505) 326-4737

BEAVER CREEK COAL COMPANY
PRICE, UTAH
MINE: BEAVER CREEK

DATE REPORTED: December 18, 1990

Lab No.	Location	Depths	pH	EC mmhos/cm @ 25°C	Saturation %	Calcium meq/l	Magnesium meq/l	Sodium meq/l	SAR	Coarse Fragments %	Sand %	Silt %	Clay %	Texture
9654	BCCCo.--SP	12-24	8.1	9.38	32.3	21.6	74.0	35.6	5.15	31.0	50.2	33.1	16.7	LOAM

Miscellaneous Abbreviations: SAR= Sodium Adsorption Ratio, CEC= Cation Exchange Capacity, ESP= Exchangeable Sodium Percentage, Exch= Exchangeable, Avail= Available

Inter-Mountain Laboratories, Inc.

2506 West Main Street Farmington, New Mexico 87401 Tel. (505) 326-4737

BEAVER CREEK COAL COMPANY
PRICE, UTAH
MINE: BEAVER CREEK

DATE REPORTED: December 18, 1990

Lab No.	Location	Depths	Organic Matter %	Total Sulfur %	Neut. Pot. t/1000t	Sulfate Sulfur %	Pyritic Sulfur %	Organic Sulfur %	PyrS AB t/1000t	PyrS ABP t/1000t	Nitrate-Nitrogen ppm	Boron ppm
9654	BCCCo.--SP	12-24	2.9	-0.01	352.	<0.01	<0.01	<0.01	-0.01	352.	26.1	3.62

Abbreviations used in acid base accounting: T.S.= Total Sulfur, AB= Acid Base, ABP= Acid Base Potential, PyrS= Pyritic Sulfur, Pyr+Org= Pyritic Sulfur + Organic Sulfur, Neut. Pot.= Neutralization Potential

Inter-Mountain Laboratories, Inc.

2506 West Main Street Farmington, New Mexico 87401 Tel. (505) 326-4737

BEAVER CREEK COAL COMPANY
PRICE, UTAH
MINE: BEAVER CREEK

DATE REPORTED: December 18, 1990

Lab No.	Location	Depths	Bulk Density *	Water Retention Difference in/in*	Total Kjeldahl Nitrogen %	1/3 bar	15 bar	H2O Sol Selenium ppm
9654	BCCCo.--SP	12-24	1.6	0.1	0.10	15.9	7.9	0.03

* Air dry bulk density was substituted for 1/3 bar bulk density in calculations.
Abbreviations for extractants: PE= Saturated Paste Extract, H2OSol= water soluble,ABPTA= Ammonium Bicarbonate-DPTA, AAO= Acid Ammonium Oxalate

ROAD

CERTIFICATION

PRIMARY ROAD CERTIFICATION

Company: Mountain Coal Company

Location: C. V. Spur

Primary Road Location: 1- County Road to Loadout

2- Refuse Haul Road

I hereby certify that the above listed Primary Roads at C. V. Spur have been constructed in accordance with the requirements of R614-301-534.200 and R614-301-742.420 and the approved permit design. As-Constructed plans for the roads are shown on Plate 3-4 of the M.R.P.

REGISTERED PROFESSIONAL ENGINEER
No. 4548
IAN W. GUY
12/3/91
STATE OF UTAH

Note: All other roads at C. V. Spur are Ancillary Roads.