E 2,205,750
E 2,206,000
E 2,206,250
N 437,750
N 437,500
N 437,250
N 437,000

1/4" x 0"
WASHED COAL

3" x 0"
WASHED COAL

2" x 0"
RAW COAL

STOCKPILE AREA

TRUCK
DUMP

C-4
(24" CMP)

C-4
(24" CMP)
EXTENDED

EXISTING
CONCRETE
PAD

PROPOSED
ROAD

PROPOSED
ROAD

C-26
(18" CMP)
PROPOSED

C-16
(24" CMP)

STOCKPILE AREA

5515
5510
5505

2205825.87
437126.6120
5520.58

C-2
(18" CMP)

TOP SOIL

BERM

2206016.121
436918.0310
5514.57

TOP SOIL

TYPICAL SECTION

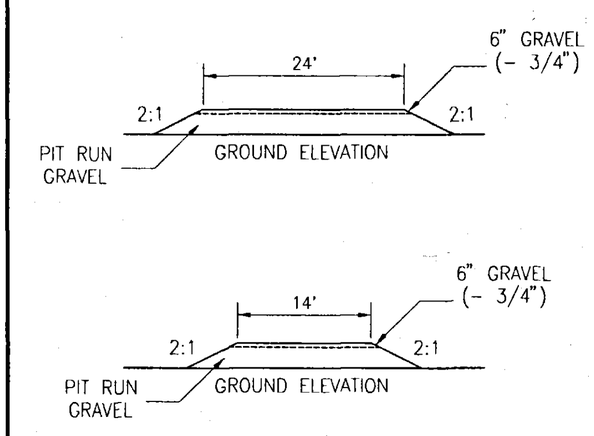

LEGEND:

PROPOSED ROAD ALIGNMENT:
SURFACE DRAINAGE:
NEW OR MODIFIED CULVERT:

REVISIONS:	
D. BALLARD	XXXX

20' 0' 40' 80'

REGISTERED PROFESSIONAL ENGINEER
DAN W. GUY
No. 154168
STATE OF UTAH

INCORPORATED
EFFECTIVE:
JUN 27 1997
97A
UTAH DIVISION OF OIL, GAS AND MINING

Savage
INDUSTRIES, INC.

SAVAGE COAL TERMINAL
PROPOSED ROAD ALIGNMENT

DRAWN BY: WOLF COMPUTER DESIGN	SCALE: AS SHOWN
DATE: 05/27/97	PLATE NUMBER: 3-4A