3.2.1.2 Facilities Construction Dates

The following is a list of facilities and approximate dates on which construction was begun and completed on each:

Facility	Construction Begun	Construction Completed
Preparation Plant	10/77	12/78
Conveyors	10/77	4/78
Silo/Loadout	10/77	4/78
Shop/Lab/Warehouse	3/80	6/80
Power Line/Substation	10/77	4/78
Pumphouse	8/78	10/78
Scales/Scalehouse	2/78	4/78
Refuse Pile	12/78	On-Going
Railroad Loop	10/77	4/78
Roads/Parking Areas	10/77	4/78
Water System	10/77	10/78
Culinary Water	8/84	9/84
Sewage System	3/80	5/80
Diversion Ditches	6/78	6/79
Sedimentation Ponds	6/78	6/79
New Shop/Oil Storage	10/05	4/06
New Reclaim Conveyor	10/05	6/06
New Stacking Tube	04/06	-
New Plant Feed Conveyor	08/06 est.	-
New Stacking Conveyor	08/06 est.	-
New Raw Coal Conveyor	08/06 est.	-
Settling Ponds	08/06 est.	-
Refuse Conveyor	08/06 est.	-

File in:
☐ Confidential
☒ Expandable
Refer to Record No 0003 **Date** 3/21/07
In C/007/0022, 2007, Incoming
For additional information

3.2.3.3 Coal Processing Waste Disposal (continued)

Coal processing waste at C.V. Spur was truck hauled from the preparation plant to the designated disposal site within the permit area. The design, construction and maintenance of the waste bank is under the supervision of a registered professional engineer.

The coal processing waste was the reject from the washing cycle used to clean and upgrade the coal from the Beaver Creek Coal Company mines in the Carbon-Emery County area. Coal was washed from the Gordon Creek #2 Mine (Castle Gate "A" Seam), Gordon Creek #3 Mine (Hiawatha Seam), and Huntington Canyon #4 Mine (Blind Canyon Seam). All of the seams producing coal for this plant were low-sulfur (0.5% to 0.8%). The reject was also low-sulfur, non-acid, and non-toxic. The attached analyses show the typical quality of the coal and the refuse product (Figure 3-1 and 3-2).

The wash plant has been idle since 1984; however, it is scheduled to be restarted during the summer of 2006. Equipment will be replaced or upgraded within the plant as required. The washing cycle will generate refuse as it did previously; however, under the new scenario, the refuse will be stored only temporarily on the east and/or west side of the refuse pile in an area where refuse has been removed. See Plate 3-2. The coal to be washed under this restart plan is owned by another company, and the refuse generated by the washing cycle will be disposed of in their refuse pile which is presently under application to be expanded. This refuse will only be stored at Savage Coal Terminal until such time as the expanded refuse site for this company is approved, which is expected to be no more than 1 year maximum. The actual time on site will likely be much less; however, the one year maximum allows for possible delays or other unforeseen changes in the refuse pile expansion. At that time, all of the refuse generated by the restart of the washing cycle will be taken to the company's refuse site for permanent disposal.

Plant projections estimate approximately 53 tons per hour of refuse. Based on this figure, and 16 hours per day of operation, the plant will generate approximately 848 tons per day, or approximately a maximum of slightly over 200,000 tons per year.

This material will be placed on the west end of the existing refuse pile, in the location where refuse has been previously removed for Sunnyside Cogeneration. The material will be placed and compacted and otherwise managed and inspected as per the approved refuse handling procedures in the M.R.P. These procedures will provide for mass stability and prevention of combustion primarily from proper compaction and complying with slope and height limitations from the approved plan. The temporary pile will be placed within the existing refuse pile ditch as shown on Plate 3-2. The pile will also be sloped to drain to the ditch and constructed to prevent water retention on the pile.

A sampling program will be initiated for all refuse to be temporarily stored on site for more than 30 days. A grab sample will be taken of the stored refuse at intervals not to exceed 5,000 ton, and analyzed for acid-toxic potential. Samples will be run according to the latest Division Soil Guidelines, Tables 4 and 8. Sample results will be submitted to the Division on a quarterly basis, and included with the Annual Report for the site.

At the present time, no coal processing waste is being deposited on the refuse pile from the plant. Materials from ditch and pond cleaning are periodically placed on the refuse pile.

The texture of the refuse material has been classified as "coarse", as indicated by the following typical screen analysis:

+4"	-	5%
4" x 2"	-	5%
2" x 3/4"	-	15%
3/4" x 1/4"	-	20%
1/4" x 28m	-	25%
28m x 0	-	30%

Based on the analyses, there is no apparent reason that the toxicity of the refuse product should change; however, if water analysis in the area should indicate a change in pH or other possible toxic levels after the refuse has weathered, additional sampling will be performed to check for acid-toxic levels in the refuse.

If the tests show an acid or toxic forming potential, the disposed material will be covered with 4 feet of non-acid, non-toxic material.

Site Inspection

The refuse banks will be inspected under the supervision of a qualified registered engineer at least quarterly; this will continue until the bank has been graded, covered, and reseeded. Inspections will include observations of any potential safety hazards, to assure that organic material and topsoil is removed before deposition and that construction and maintenance are being performed in accordance with the design plan.

If such inspection discloses a potential hazard, the inspector will immediately notify the regulatory authority of the hazard and the emergency procedures to be implemented.

3.2.5 Transportation Facilities

3.2.5.1 Roads

The location of access and coal haulage roads and parking areas are provided on Plate 3-2.

A proposed new primary access and haul road will be constructed from the office area road to the new settling pond site. This road will be approximately 415' long, gravel-surfaced and maintained at approximately 16 feet width. The road is shown on Plate 3-2 and detailed on Plate 3-4.

All roads on the site will be maintained throughout their life to meet the design standards. This will include, as necessary, regrading, resurfacing, cleaning of ditches and culverts, watering and/or sweeping for dust control.

If a road is damaged by a catastrophic event, it will be repaired as soon as practical after the damage has occurred.

All roads will be removed and regraded upon final reclamation of the site.

The following is a description of each of the primary roads on this site:

PR-1
Main entrance and coal haul road on west side. Road runs from west entrance to preparation plant. Approximately 1705' long with an average grade of 2.23%. Approximately 770' of road is paved, and the balance is gravel-surfaced. Road is approximately 24' wide.

PR-2
Haul road from SW entrance to intersection with PR-1. Approximately 1720' long with an average grade of 1.51%. Entire length of road is paved, and is 24' wide.

PR-3

This is the No. 1 Truck Dump loop road. The road is approximately 1425' in length with a maximum plus grade of 7.06% and a maximum minus grade of 6.45%. This is a gravel-surfaced road and is 24' wide.

PR-4

Refuse haul road, running from the wash plant to the refuse pile. The road is approximately 3840' long and has an average grade of 0.42%. This road is gravel-surfaced and maintained at a width of 20'.

PR-5

This is the pumphouse road running from the intersection with the refuse road (PR-4) to the pumphouse. The road is approximately 625' long with an average grade of 0.96%. It is gravel-surfaced and approximately 16' wide.

PR-6

Sample house road, running from the refuse road (PR-4) to the sample building/loadout tunnel. The road is approximately 545' long with an average grade of 1.83%. It is gravel-surfaced and approximately 16' wide.

PR-7

No. 2 Truck Dump Road, running from its intersection with PR-1, over the truck dump and back to the intersection with PR-2. The road is approximately 2340' in length with an average grade of 1.28%. It is a gravel-surfaced road with a width of approximately 24'.

PR-8

Truck Dump No. 5 Road, running from PR-7, across the No. 5 Truck Dump and back to the PR-7. This road is approximately 890' in length with an average grade of 2.02%. The road is gravel-surfaced and is 20' wide. Maximum grade down from the truck dump is 9.00%.

PR-9

Topsoil Pile Road, running from PR-7 to the refuse road (PR-4). This road is approximately 420' long with an average grade of 1.91%. The road is gravel-surfaced and approximately 20' wide.

PR-10

Truck Dump No. 3 Road running from the refuse road (PR-4) over the No. 3 truck dump and back to PR-4. It is approximately 560' in length with a maximum grade of +10.00% up and -10.34% down. The road is gravel-surfaced and approximately 16' wide.

PR-11

This is a short length of road constructed to tie the 2 main haul roads, PR-1 and PR-2, together. The road is approximately 400' in length with an average grade of 0.25%. This road is gravel-surfaced and approximately 24' wide.

PR-12

Office/Shop Road, running from PR-1 across the office parking pad and down to the intersection of PR-1 and PR-3. The road is approximately 575' in length with an average grade of 1.74%. It is gravel-surfaced and approximately 20' wide.

PR-13

This is the access/haul road for the new settling ponds. The road runs from PR-12, below the office, to the settling ponds. The road is approximately 415' in length with an average grade of approximately 2.22%. The road is gravel-surfaced and approximately 16' wide.

The above referenced roads are all considered "Primary Roads" as provided in R645-301-527.100. All other roads on the site are considered "Ancillary Roads".

The following information pertains to all roads on the site:

1- Roads are located, designed, constructed, reconstructed, used, maintained and will be reclaimed to:

a. Prevent or control damage to public or private property;
b. Use non-acid or non-toxic substances in road surfacing;
c. Have a minimum static safety factor of 1.3 for all embankments;
d. Be removed and regraded during the final site reclamation;
e. Using current, prudent engineering practices to control or prevent erosion, siltation or air pollution;
f. To ensure environmental protection and safety by designing roads with appropriate limits for use and type and size of equipment used.

In addition, all Primary Roads will meet the following requirements:

a. Be located, constructed and maintained in such a manner as to protect fish wildlife and related environmental values by avoiding wetlands, using non-acid and non-toxic materials, providing adequate drainage and employing the lowest practical speed limits on site;
b. Be located on the most stable available surface (see Plate 3-2);
c. Be surfaced with crushed gravel or asphalt to provide durability for the volume, weight and speed of the anticipated vehicles;
d. Be routinely maintained to provide intended use;
e. Have culverts designed, installed and maintained to sustain the vertical soil pressure, passive resistance to the foundation, and the weight of the vehicles using the road. All culverts are steel or corrugated metal pipe and are of adequate strength to withstand expected vehicle weights. No failures have ever been noted.

3.2.5.2 Railroads

A major railroad grade embankment (approximately 4'-12' in height) is located on the eastern edge of the site, immediately outside of the permit area. This grade supports the main rail line(s) and is owned and maintained by the Denver and Rio Grande Western Railroad. This line will undoubtedly remain in service after closure of the C.V. Spur.

The line will undoubtedly remain in service after closure of the C.V. Spur.

The railroad loop within the C.V. Spur is owned by Beaver Creek Coal Company. It consists of a single sit of tracks slightly elevated (3') above natural ground. This rail serves as a loop for the unit trains to travel head-first into the silo, eliminating the need for engine switching. The loop is 8,340 feet long. This rail line will be used and maintained throughout the C.V. Spur operational life.

Grades and typical cross-section of the rail loop are shown on Plate 3-5, "Railroad Facilities".

3.2.5.3 Conveyors

There are seventeen (17) separate, permanent conveyor runs at the C.V. Spur (see Figure 3-7). In addition, there are temporary, portable conveyors used on the site. The number and location of the temporary conveyors varies according to need.

Conveyor #1 - 36" x 250' long stacking conveyor from the truck dump to the raw coal stacking tube.

Conveyor #1a - 36" x 250' long stacking tube conveyor from the above raw coal stacking tube to a new steel stacking tube. (Appendix 3-8 BC-01)

Conveyor #1b - 36" x 233' conveyor from new stacking tube area to wash plant. (Appendix 3-8 BC-02)

Conveyor #1c - 36" x 130' stacking conveyor from wash plant to clean coal pile on north side. (Appendix 3-8 BC-05)

Conveyor #1d - 36" x 200' conveyor for -1/4" coal from wash plant to raw coal pile to west. (Appendix 3-8 BC-03)

Conveyor #1e - 36" x 101' conveyor to carry refuse from the wash plant to the refuse bin. (Appendix 3-8 BC-04)

Figure 3-7

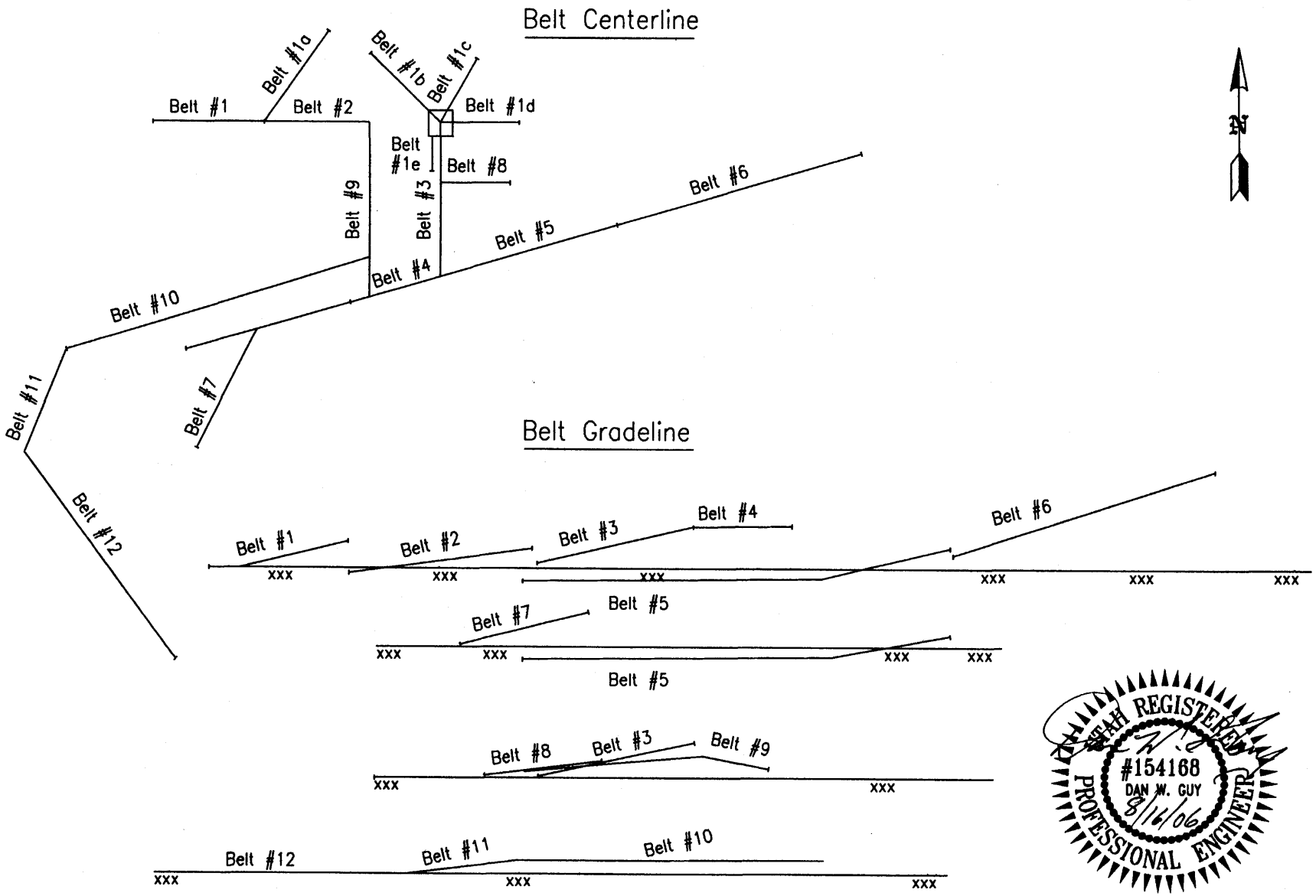

Savage Coal Terminal

Centerline and Grade of Belts

C.V. Spur 1"=300' April 2006

Conveyor #2 - 36' x 300' reclaim conveyor from raw coal pile to conveyor #9.

Conveyor(s)# 3-(2) 36" x 365' clean fine and coarse coal conveyors from the plant to the clean coal stacking tube.

Conveyor #4 - 36" x 225' clean fine coal transfer conveyor from coarse coal stacking tube to fine coal stacking tube.

Conveyor #5 - 48" x 600' clean coal reclaim conveyor from clean coal piles to transfer in loadout sample building.

Conveyor #6 - 48" x 660' loading conveyor from transfer point in sample building to 10,000 ton silo.

Conveyor #7 - This conveyor is 36" x approximately 350' and runs from the new truck dump to a crushed coal stacking tube.

Conveyor #8 - 42" x 150' conveyor from the new truck dump to the twin 36" conveyors described in #3 above.

Conveyor #9 - 48" x 440' conveyor from the plant feed belt to the clean coal stacking tube area.

Conveyor #10 - 48" x 728' elevated conveyor from truck loop storage area to conveyor #9.

Conveyor #11 - 48" x 246' feed conveyor from the truck loop storage area to conveyor #10.

Conveyor #12 - 48" x 564' future surface transfer system to move coal from the track loop storage area to conveyors #10 and #11.

Grade of all conveyors are shown on Figure 3-7, "Conveyors - Loadout & Grades". All surface conveyors are covered and equipped with walkways. All conveyors will be used throughout the C.V. Spur operational life.

3.2.7 Power Supply and Transmission Lines

The primary electrical service for the C.V. Spur is from a 44.5 kV transmission line owned and operated by Utah Power and Light Company. This HVTL skirts the north and west edge of the property and lies within the permit boundary on a utility easement (see Section 4.3.1).

A 12.5 kV overhead line extends from the northeast corner of the property to the substation adjacent to the coal processing plant (see Plate 3-2).

Various lower voltage underground distribution lines extend from the substation to the truck dumps, stacking tubes, etc.

3.3 Operations Plan

3.3.1 Plant Processing System

Raw coal will be fed into the plant wash box via the existing feed conveyor. -1/4" material will be separated prior to washing, and conveyed to the 2 x 0 clean coal pile west of the plant. It should be noted this will include the majority of the minus 28 mesh material which is to be later separated in the settling ponds. Refuse will be separated from the coal and placed in the refuse bin for loadout. The clean coal will continue through the plant systems for sizing and drying, with the final, clean product being stockpiled on the north side of the plant. Residual minus 28 mesh material from the washing cycle will be pumped to the settling ponds where the solids are settled out and the process water is clarified and returned to the plant wash cycle.

3.3.2 Washed Coal System

The washing cycle will operate in the same manner as the previous plant operation, except there will be no static thickener for removal of fines and water clarification. Minus 1/4" material will not be washed. As the +1/4" product is washed, only the residual minus 28 mesh material still adhering to the larger product is pumped to the series of settling ponds to be constructed northeast of the main office building. The fines will be settled in these ponds, and the clarified water will return to the plant in a separate line for reuse in the washing cycle. A dual set of ponds will be constructed as shown on Plate 3-2. When one set of ponds become full of settled fines, the valves can be switched to the other set of ponds, allowing the previous set to be cleaned.

It should be noted that the ponds will be constructed in such a manner as to prevent inflow from site runoff, and will not be part of the sedimentation and drainage control system for the site. The ponds will be incised; however, they will also be surrounded by a raised berm to prevent runoff inflow, as shown on Figure 3-13. The settling ponds will provide the same function as the previously operated static thickener, and will still allow for the plant wash cycle to operate as a closed-loop circuit with no discharge except in the event of an emergency. If such an emergency should occur, any discharge from the plant or settling ponds would be contained by the sedimentation ponds on site.

It is estimated that the -28 mesh coal slurry to be settled in the ponds will be pumped to the ponds at a rate of approximately 25 gpm, with a projected maximum amount of -28 mesh material of 1 ton per hour.
The material removed from the settling ponds during cleaning will be treated as a coal product and blended in with coal shipments, rather than being disposed of as refuse.

When one set of ponds become full of settled material, the valves will be switched to use the adjacent set of ponds, while the full set is allowed to dry and be cleaned. Once the ponds are dry enough to clean, it is proposed to enter the pond with a dozer on the upper end where there is a 3:1 slope. The dozer has a much lower ground pressure than a front-end loader, and therefore, can move better within the pond material without sinking. The dozer will push the material either back up the bank where it can be picked up with a front-end loader, or towards the edge of the pond where it can be extracted with a backhoe and placed in a truck. Actual equipment utilized for cleaning will depend on availability and conditions at that particular time; however, all pond cleaning operations will be conducted to minimize damage to the ponds and to minimize impacts to the environment.

It should be noted that the ponds are constructed with raised berms all around as shown on Figure 3-7. Runoff from the undisturbed area west of the ponds will flow into the undisturbed diversion ditch UD-1. Runoff from the disturbed area around the ponds, as well as from the material cleaned from the ponds will flow to the existing disturbed area collection ditch CD-6 and to the sediment ponds, as shown on Plate 7-2.

The material removed from the ponds will be windrowed on the northwest side of the ponds for drying as shown on Plate 3-2. Once the material is dry enough to handle, it will be taken by a front-end loader to the 2 x 0 clean coal pile west of the plant. The proposed drying area is considered part of the overall coal stockpile area in the air quality approval order. It should be noted that, since the minus 1/4" material is not washed, the only minus 28 mesh material settled in the ponds will be the residual material adhering to the larger size washed product. As a result, the settling ponds will very likely not need cleaning more than once a year.

The design details for the proposed settling ponds are shown on Figure 3-13 and Plate 3-2. The ponds have a total capacity of 11.11 acre feet and therefore do not meet any of the criteria of 30 CFR 77.216(a).

The ponds will be constructed under the supervision of a registered professional engineer. The pond construction will be monitored and inspected by the P.E. during construction, and certified upon completion, to ensure compliance with performance standards. The ponds will be inspected by a qualified individual at least quarterly, and certified with other impoundments annually. The ponds will be checked and maintained on a regular basis to ensure they operate in a safe, efficient manner. Maintenance may include cleaning, drainage control and erosion control.

The proposed ponds will have a total storage capacity of 11.11 acre feet. Only 2 of the 4 ponds will be used at one time, reducing the active water storage capacity to 5.56 acre-feet. The ponds will be approximately 95% incised, with only a small portion of the dam above ground level. This would leave only 0.278 acre-feet of potential water release in the event of a failure of the ponds. This water would flow to the disturbed ditch CD-6 and into Ponds 1, 2, 3 and 6. The wash plant will contain a maximum of 23,500 gallons, or approximately 0.07 ac.ft. of water at any given time. In the event of a failure, at least 10,000 gallons of this water would remain in the plant in 2 below-floor sumps, with the balance of approximately 13,500 gallons, or 0.04 acre feet of water going to Ponds 1, 2, 3 and 6. This amount added to the maximum potential release from the ponds, will total 0.319 acre feet, or approximately 0.012 ac.ft. less than the excess pond capacity. Therefore, the ponds would safely contain a worst case discharge from both the settling ponds and plant along with the runoff and sediment from a 10-year, 24-hour precipitation event. The sedimentation ponds have previously been shown to present no significant risk of harm to the environment or public health; therefore, since the proposed settling ponds would flow to and be contained by, the sediment ponds, they also present no significant risk of harm to the environment or public health.

FIGURE 3-13
SAVAGE COAL TERMINAL SETTLING POND

(NOT TO SCALE)

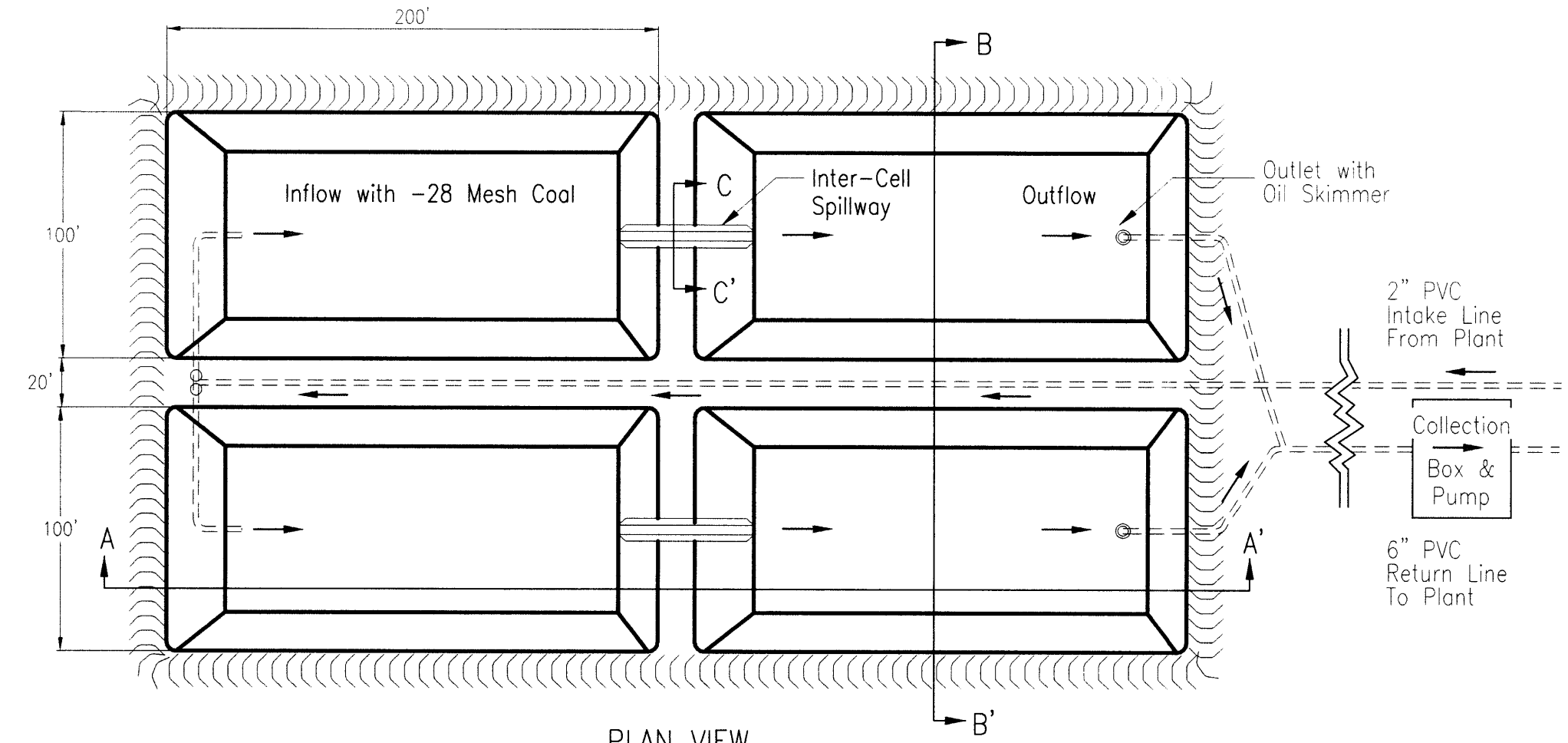

PLAN VIEW

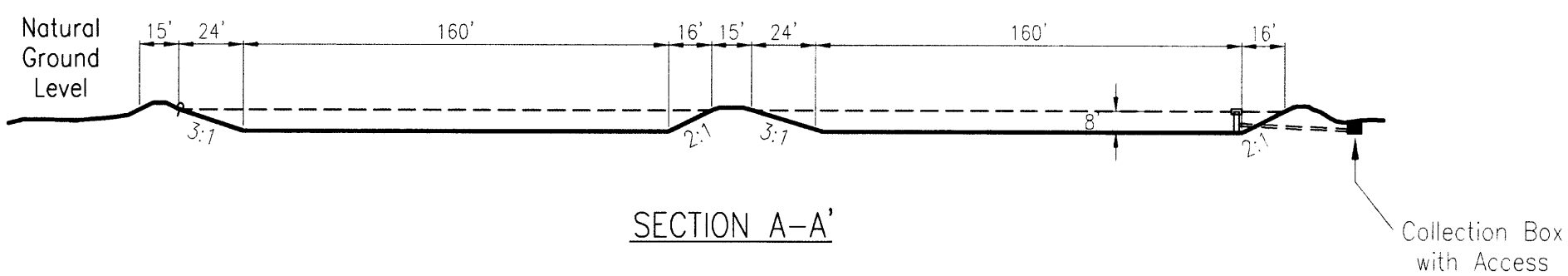

SECTION A-A'

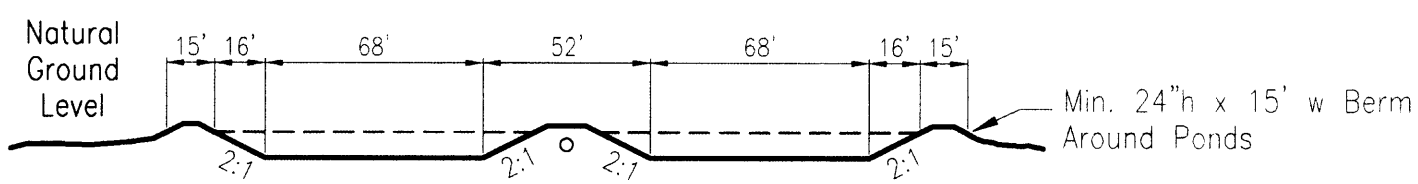

SECTION B-B'

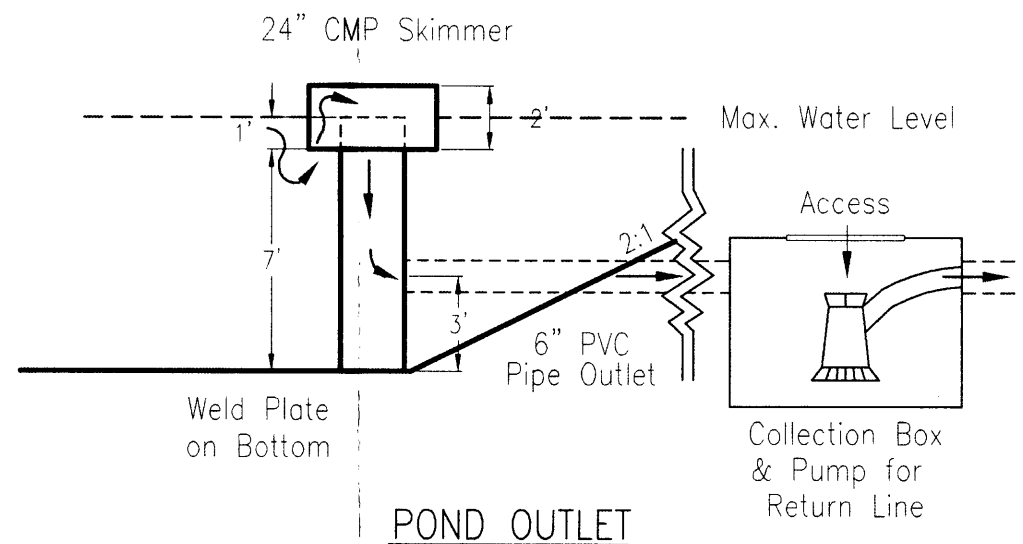

POND OUTLET

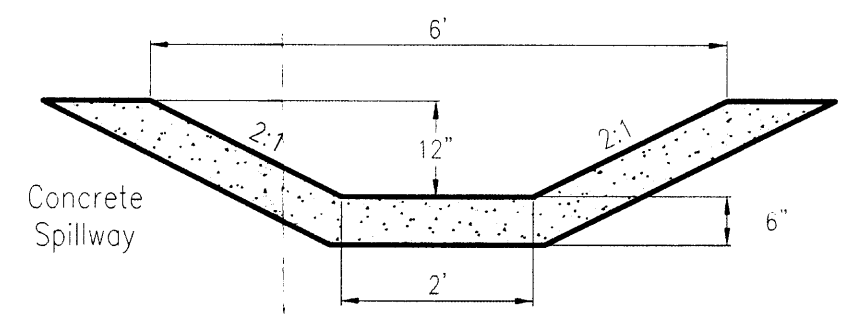

SECTION C-C'

INTER-CELL SPILLWAY

3.3.3 Non-Washed Coal System

Coal is received from various mine operations in the area. The coal is brought in by double trailer trucks, and is stored at designated locations on the site. The majority of the coal is dumped through one of five truck dumps on site, where it is conveyed to stackers or stacking tubes prior to shipping.

The coal is loaded onto a 48" conveyor by any of 8 vibrating feeders located beneath the piles in a 14' diameter steel reclaim tunnel. The covered conveyor takes the coal from the tunnel to an enclosed sample building. Most of the coal is sampled at this point; however, there are 2 additional samplers on the loadout belt which are utilized for specific companies and contracts. From the sample building, the coal is transferred to another 48" conveyor, is weighed on a Merrick Belt Scale, and loaded into the silo at approximately 1000 tons per hour.

3.3.4 Loadout System

The loadout silo is totally enclosed, and will contain 10,000 tons of coal for loading. Unit trains of up to one hundred 100-ton cars are brought into the property, around the track loop and into the base of the silo. Loading of the train is controlled by 2 hydraulic operated gates and chutes. Trains are then loaded out at a rate of 5,000 to 7,500 tons per hour.

Coal Handling

The Savage Coal Terminal has the capability of handling and shipping up to 12 million tons per year. Present projections are for the handling and shipping of 7.0 to 8.0 million tons per year.

3.3.5 Major Equipment

The following list will itemize the equipment presently used at the Savage Coal Terminal.

1- 5 truck dumps with receiving hoppers
2- 2 coal crushers with screens
3- 1 screen plant
4- 3 radial stackers
5- 2 underpile reclaim systems
6- 4 stacking tubes
7- Preparation plant with associated screens, crushers, and conveyors (enclosed)
8- 2 - 48" reclaim conveyors
9- 7 - 36" conveyors
10- 2 - 36" mobile conveyors
11- 1 - 10,000 ton silo/unit train loadout
12- 3 front-end loaders
13- 3 dozers
14- 1 water truck
15- Miscellaneous gas-powered vehicles
16- Fuel storage facility (surface)

3.4.5 Protection of Fish and Wildlife

As an initial part of the fish and wildlife study, open file data and wildlife range maps available from the DWR Regional Office in Price, Utah were reviewed. Study methods were discussed informally with the DWR in Price, Utah, in September, 1980. The final reclamation seed mixture will consist of species that are adapted to onsite conditions and are of known value to wildlife for cover, forage, or both.

The proposed new settling ponds will likely become at least a stopover point for waterfowl. The water and coal to be settled is non-toxic; therefore, the ponds will not present a hazard to wildlife.

Calculations that demonstrate the amount of water consumed from mining activities as required for the Colorado Fish Recovery program to ensure compliance with the Endangered Species Act are included in Table 3-4.

3.4.5.1 Potential Impacts of Fish and Wildlife

As discussed in Section 10.0, the C.V. Spur contains limited wildlife habitat. The wildlife that does occur on the site consist mainly of small mammals and songbirds. These species appear to be unaffected by on-going operations as compared to larger species of birds and mammals that are more furtive in nature. At the time of decommissioning it is most likely that wildlife inhabiting the surrounding areas will quickly re-inhabit C.V. Spur.

3.4.5.2 Mitigation and Management Plans

Since C.V. Spur is an existing operation, wildlife management measures have been designed to prevent additional impacts from continuing operations. This will be achieved in the following ways:

1- Limiting the amounts of disturbance to what is necessary for on-going operations and refuse disposal.

2- Preventing hunting or harassment of wildlife in the permit area.

3- "Employee awareness" programs will specifically inform mine personnel of especially sensitive periods (e.g., the nesting of raptors, snake dens, etc.).

These policies will enhance wildlife usage of the site during operations and help facilitate the rapid return of the site to wildlife habitat after decommissioning.

3.4.5.3 Fish and Wildlife Monitoring

Beaver Creek Coal Company will conduct a wildlife monitoring program as needed throughout the operational life of C.V. Spur. The monitoring program will utilize the services of an environmental specialist and, as necessary, professional consultants to evaluate the ongoing success of operational mitigation measures, ensure that threatened or endangered species and sensitive or critical use areas remain undisturbed by future activities, deal with any unforeseen difficulties which might arise and participate in reclamation efforts upon completion of the project. The Company will promptly report to the regulatory authority the discovery of the presence of any threatened or endangered species or any bald or golden eagle that has not been previously reported.

3.4.6 Protection of Air Quality

The air quality at C.V. Spur will be protected through implementation of control devices such as covered conveyors, water sprays to minimize wind erosion from coal piles and dust in reclaim tunnels, water trucks and chemical dust suppressants to control emissions from unpaved roads and coal piles, silo enclosures, and vibrating feeders for the pile load-in area.
It should be noted that a new Notice of Intention has been filed with the Division of Air Quality, which includes new equipment and structures for the restart of the wash plant at Savage Coal Terminal.

3.4.6.1 Projected Impacts of Mining Operations on Air Quality

Impacts from dust emissions at C.V. Spur will be localized close to the source of emission. Most of the emissions are anticipated to be composed of large-sized particles greater than 10 micrometers. which settle out within a half mile of the emission source. The large particles do not produce any heath effects since thy are not inhalable or respirable. Since most light scattering is caused by micron-sized particles, little impact on visibility is anticipated from dust emissions from the C.V. Spur processing facilities. Most of the air quality impact from facility emissions, if any, will be generally confined to the plant site.

3.5.1 Interim Reclamation (continued)

When operations at Savage Coal Terminal are finally terminated, all surface facilities will be removed and the surface area graded, topsoiled and revegetated. Seeding and planting will occur immediately after site preparation and topsoil placement. After revegetation efforts have been completed, all drainage structures, culverts, and diversions will be removed and the area reclaimed.

3.5.2 Soil Removal and Storage

The soil survey conducted in July, 1980 distinguished disturbed soils from undisturbed soil mapping units (see Plate 8-2, Soils Map). Areas mapped as Disturbed Land were areas where the soils, vegetation, or both were affected by operations. Disturbance of areas which now occupy roads and surface facility sites occurred prior to enactment of reclamation legislation so no topsoil was salvaged from these areas. However, soils underlying disturbance are considered to be in-place aside from the top several inches of coal fines, and compaction.

The undisturbed soil mapping units will have topsoil removed immediately prior to disturbance based on stripping depths that have been assigned to each soil type. The stripping depths were derived from soil physical and chemical analysis (see Section 8.5). Subsoil is that material which exist between the topsoil and the parent material.

Where chemical analysis substantiates, subsoil will be stripped down to the parent material.

The location of the topsoil pile that currently exists at Savage Coal Terminal is displayed on Plate 3-2. This stockpile was placed on level ground and revegetated with the temporary seed mixture to reduced wind and water erosion. As additional topsoil is placed on the stockpile, it is reclaimed contemporaneously immediately after placement.

The proposed new topsoil and subsoil salvage for the settling pond area is shown on Plates 3-2 and 8-1. It has been recommended by the Division that soil salvaged from this area be kept in that area, rather than placing it on the existing topsoil pile. Both topsoil and subsoil will be salvaged from this area and placed in separate piles as shown on Plate 8-1.

3.5.2 Soil Removal and Storage (continued)

The topsoil and subsoil stripped from this new area will be placed in separate storage piles and left in a roughened condition. Organic debris existing on the surface of the newly stripped area will be left in the soil when stockpiled to maintain the organic content.

Once the newly stripped soil is placed in new stockpiles, 2000 pounds per acre of hay mulch will be added to the surface of all newly stockpiled soil. The surface will then be roughened using a combination of dozers with rippers and backhoes. Once the site is prepared, the new pile will be hydroseeded using the Temporary Seed Mix described on Table 3-1. 2000 pounds per acre of wood fiber mulch and 60 pounds per acre of tacifier will also be applied to the surface with the hydro-seeding operation. Potassium fertilizer will also be used on the topsoil and subsoil piles at a rate recommended by the Division.

The topsoil piles will be protected by a combination of efforts, including existing berms and straw bales and revegetation as described above.

3.5.3 Final Abandonment

Upon final cessation of operations all surface structures and facilities for the operation will be removed. There are no plans to transfer any wells to other parties. The shallow monitoring wells located within and around the property will be sealed by filling them with cement or other inert sealing material. All salvageable materials will be recovered and removed for sale or re-use. Non-salvageable materials (concrete, gravel, etc.) Will be placed to the extent possible in existing impoundment excavations and low areas as fill prior to final grading and stored on the berms of sedimentation ponds. Remaining material will be taken off site to an approved landfill, (see Approval Letter, Figure 3-12). The schedule and cost of removal is detailed in Sec. 3.5.6.1 and 3.5.7.1 respectively.

3.5.3.0 Disposition of Drill Holes

Thirteen observation (ground water monitoring) wells were drilled at C.V. Spur in the period 1980-1982. Nine holes were within the permit area, with an additional four holes drilled on adjacent farmland. All drill hole locations, elevations, depths, and completion records are shown in Table 7-1a.

All drill holes (monitoring wells) have now been terminated with casings cut off and backfilled with cement as shown in Table 7-1a.

3.5.3.1 Removal of Impoundments and Diversions

All sedimentation ponds and diversion ditches will remain in place until an effective vegetation cover has been reestablished to reduce suspended solids runoff from the affected areas.

The 4 settling ponds associated with the wash plant will be removed and backfilled when no longer needed for the operation. The topsoil and subsoil for the settling pond and associated area will be kept within the settling pond disturbed area. Upon reclamation the pond overflows will be removed, and the ponds will be filled in and compacted with dozers or wheeled loaders, using the berm material and stored subsoil material. The area will be regraded to approximately original contour, topsoiled and reseeded according to the approved plan, as described in Section 3.5.5 and shown on Plate 3-7.

The success of the revegetation will be monitored and measured as described in Sec. 3.5.5.4 and 9.3.2.6. Once the success of revegetation is determined to be acceptable, all diversions and sedimentation ponds will be filled in first with the concrete rubble and gravel stored on the berms. See Section 7.2.8 for details of post-mining hydrology.

The berms around the ponds will then be pushed in and compacted to complete the backfilling. The diversions will then be removed by pushing the berms into the ditches.

These areas will then be prepared and plated in accordance with the revegetation plan. The ponds will be removed in numerical order (1, 2, 3, 5, 6); to minimize the risk of a major precipitation event eroding the newly revegetated area.

3.5.3.2 Removal of Roads/Railroads

The roads required for access to the sedimentation ponds and diversions will be left in place until pond and diversion reclamation is under way. The roads will then be removed and reclaimed in the same manner as discussed under Sec. 3.5.4, Backfilling and Grading Plans. There are no plans to leave any roads at this property.

The loop track within the property belongs to Beaver Creek Coal Co., and will be removed upon completion of operations. The spur track is the easternmost track running north-south, and is the property of D & RGW Railroad, and will remain in place upon reclamation. The final configuration of the property is shown on Plate 3-7.

3.5.5.2 Seeding and Transplanting (continued)

may be valuable for reclamation of the site. By studying the effects of specific introduced and native species planted together on C.V. Spur during temporary reclamation, Savage Services Corporation will be able to design a permanent reclamation seed mixture most compatible with the site. At the present time, the permanent reclamation seed mixture consists of the species and rates found in Tables 3-2a and 3-2b. The mix in Table 3-3 will be used to revegetate the disturbed area on the Price River pipeline system. The pipeline system is described in Sec. 3.2.6.1 and shown on Plate 1-1. The revegetation plan for the Price River Well area also includes the planting of Sandbar Willows at a density of 150 per acre (to a distance of 200 feet from the river).

In most cases the post-mining topography will be gentle enough to drill seed along the contour. On steeper areas (greater than 4:1), a combination of hydroseeding and broadcast seeding will be utilized. Hydroseeding and broadcast seeding will be applied at twice the rate of drill seeding (as described on the seed mixture tables).

Seeding will take place immediately after topsoil placement to provide for good seed/soil contact. Success of the revegetation program will be determined by comparing the percent groundcover and shrub density on the reclaimed area with that on the reference area described in Section 9.3.2.5. Success standards will be those required by UMC 817.116 (3)(iv) and UMC 817.117(c).

Table 3-4
PROJECTED WATER CONSUMPTION
FOR
SAVAGE COAL TERMINAL

Use	Calculation Basis	Volume
1- Road Watering Dust Control	*1.20 gal/ton x 10MM ton/yr. = 12,000,000 gal/yr.	36.83 ac. ft./ yr.
2- Coal Washing	**2.5 gpm x 60 min./hr. 16 hr./day x 250 days/yr. = 6,000,000 gal/yr.	18.42 ac. ft./yr.
3- Bath House/Office	35 gal./day/person x 25 people/day x 250 day/yr. = 218,750 gal/yr.	0.67 ac. ft/yr.
Total Projected Water Usage =		55.92 ac.ft./yr.

* Average usage over last 5 years.
** Projected make-up water for washing circuit.

The success of revegetation efforts will be compared with an established reference areas as shown on Plate 9-1 and described in Section 9.3.2.6. Reclaimed areas will be monitored utilizing methods approved by the division and will meet sample adequacy requirements. Both the reclaimed area and corresponding reference areas will be sampled during the 9th and 10th year following reclamation. The monitoring schedule is as follows:

Monitoring Schedule

Year	Qualitative Sampling	Quantitative Sampling
1	X	
2	X	X
3	X	X
4	X	
5	X	X
6	X	
7	X	
8	X	
9	X	X
10	X	X

APPENDIX 3-5

Reclamation Cost Estimate

August 2006

Bonding Calculations

Direct Costs		
Subtotal Demolition and Removal	$834,525.00	
Subtotal Backfilling and Grading	$370,495.00	
Subtotal Revegetation	$149,651.00	
Direct Costs	$1,354,671.00	
Indirect Costs		
Mob/Demob	$135,467.00	10.0%
Contingency	$67,734.00	5.0%
Engineering Redesign	$33,867.00	2.5%
Main Office Expense	$92,118.00	6.8%
Project Mainagement Fee	$33,867.00	2.5%
Subtotal Indirect Costs	$363,053.00	26.8%
Total Cost	$1,717,724.00	
Escalation factor		0.016
Number of years		1
Escalation	$27,484.00	
Reclamation Cost Escalated	$1,745,208.00	
Bond Amount (rounded to nearest $1,000) 2007 Dollars	$1,745,000.00	
Bond Posted 2007 dollars	$2,525,000.00	
Difference Between Cost Estimate and Bond	$779,792.00	
Percent Difference	44.70%	

Ref.	Description	Materials	Means Reference Number	Unit Cost	Unit	Length	Width	Height	Diameter	Area	Volume	Weight	Density	Time	Number	Unit	Swell Factor	Quantity	Unit	Cost
	Shop Office 01																			14960
	Scale House 02																			1569
	No 1 Truck Dump 03																			4413
	No 2 Truck Dump 04																			2374
	No 3 Truck Dump 05																			1410
	No 4 Truck Dump 06																			1725
	No 5 Truck Dump 07																			1051
	Conveyors Eight 08																			8657
	Conveyor 48 inch 09																			8657
	No 4 Radial Stacker 10																			3503
	No 5 Radial Stacker 11																			971
	Conveyor Piers 12																			1863
	Support Structure 13																			1474
	Water Tank 14																			7936
	Reclaim Tunnel 15																			32514
	Portable Hopper 16																			909
	Trailer 17																			1374
	Transfer Bin 18																			1994
	Preparation Plant 19																			201520
	Substation 20																			5777
	Fuel Storage 21																			4130
	Reclaim Control Bld 22																			1381
	Sample House 23																			4163
	Stacking Tube 24																			41372
	Loadout Silo 25																			204548
	Railroad 26																			15000
	Powerline 27																			2500
	Aphalt 28																			111542
	Pumphouse 29																			12478
	River Pump 30																			184
	Guard Rails 31																			60390
	Culverts 32																			1481
	Stacking Tube 33																			23542
	Coal Sampler Addition 34																			5361
	Conveyor Transfer 35																			16177
	New Shop Oil Storage Bld 36																			18892
	Plant Expansion 37																			6733
	Total																			[illegible]

Ref.	Description	Materials	Means Reference Number	Unit Cost	Unit	Length	Width	Height	Diameter	Area	Volume	Weight	Density	Time	Number	Unit	Swell Factor	Quantity	Unit	Cost
	Shop Office 01																			
	Structure's Demolition Cost	Steel Bld. Large	02220 110 0012	0.26	/CF	100	45	10								FT		45000	CF	11700
	Structure's Vol. Demolished																0.01	17	CY	
	Rubble's Weight (exclude steel)																			
	Truck's Capacity																			
	Haulage																			
	Transportation Cost Non Steel Truck																			
	Transportation Cost Non Steel Drive																			
	Disposal Cost Non Steel	ECDC	ECDC	35	/TON						17					CY		17	CY	595
	Steel's Weight																			
	Truck's Capacity																			
	Haulage																			
	Transportation Cost Steel Truck																			
	Transportation Cost Steel Truck Drive																			
	Disposal Cost Steel																			
	Subtotal																			[illegible]
	Equipment 's Disposal Cost	Chain link remove 8'-10'	02220 220 1700	3.05	/LF	240										LF		240	LF	732
	Dismantling Cost																			
	Equipment 's Vol. Demolished																			
	Loading Costs																			
	Transport Costs																			
	Disposal Costs																			
	Subtotal																			[illegible]
	Concrete Demolition																			
	Demolition Cost	Concrete demolition	ConcreteDemo1	6.81	/CY	100	45	0.5								FT		83	CY	565
	Concrete's Vol. Demolished																1.3	108	CY	
	Loading Cost	Front end loader 3 CY	02315 424 1300	1.43	/CY													108	CY	154
	Transportation Cost	12 CY (16 Ton) Dump Truck 1/2 mi. md. trip	02315 490 0320	3.49	/CY													108	CY	377
	Disposal Costs	On site disposal	02220 240 5550	7.75	/CY													108	CY	837
	Subtotal																			[illegible]
	Concrete Demolition																			
	Demolition Cost																			
	Concrete's Vol. Demolished																			
	Loading Cost																			
	Transportation Cost																			
	Disposal Costs																			
	Subtotal																			
	Concrete Demolition																			
	Demolition Cost																			
	Concrete's Vol. Demolished																			
	Loading Cost																			
	Transportation Cost																			
	Disposal Costs																			
	Subtotal																			
	Total																			[illegible]

Ref.	Description	Materials	Means Reference Number	Unit Cost	Unit	Length	Width	Height	Diameter	Area	Volume	Weight	Density	Time	Number	Unit	Swell Factor	Quantity	Unit	Cost
	Scale House 02																			
	Structure's Demolition Cost	Steel Bld. Large	02220 110 0012	0.26	/CF	12	12	8								FT		1152	CF	300
	Structure's Vol. Demolished																0.01	0	CY	
	Rubble's Weight (exclude steel)																			
	Truck's Capacity																			
	Haulage																			
	Transportation Cost Non Steel Truck																			
	Transportation Cost Non Steel Drive																			
	Disposal Cost Non Steel	ECDC	ECDC	35	/TON						0					CY		0	CY	
	Steel's Weight																			
	Truck's Capacity																			
	Haulage																			
	Transportation Cost Steel Truck																			
	Transportation Cost Steel Truck Drive																			
	Disposal Cost Steel																			
	Subtotal																			300
	Structure's Demolition Cost	Steel Bld. Large	02220 110 0012	0.26	/CF	75	15	3								FT		3375	CF	878
	Structure's Vol. Demolished																0.01	1	CY	
	Rubble's Weight (exclude steel)																			
	Truck's Capacity																			
	Haulage																			
	Transportation Cost Non Steel Truck																			
	Transportation Cost Non Steel Drive																			
	Disposal Cost Non Steel	ECDC	ECDC	35	/TON						1					CY		1	CY	35
	Steel's Weight																			
	Truck's Capacity																			
	Haulage																			
	Transportation Cost Steel Truck																			
	Transportation Cost Steel Truck Drive																			
	Disposal Cost Steel																			
	Subtotal																			913
	Equipment 's Disposal Cost																			
	Dismantling Cost																			
	Equipment 's Vol. Demolished																			
	Loading Costs																			
	Transport Costs																			
	Disposal Costs																			
	Subtotal																			
	Footer's Demolition																			
	Demolition Cost	Concrete demolition	ConcreteDemo1	6.81	/CY						15					CY		15	CY	102
	Footer's Vol. Demolished																1.3	20	CY	
	Loading Cost	Front end loader 3 CY	02315 424 1300	1.43	/CY													20	CY	29
	Transportation Cost	12 CY (16 Ton) Dump Truck 1/2 mi. md. trip	02315 490 0320	3.49	/CY													20	CY	70
	Disposal Costs	On site disposal	02220 240 5550	7.75	/CY													20	CY	155
	Subtotal																			356
	Total																			1569

Ref.	Description	Materials	Means Reference Number	Unit Cost	Unit	Length	Width	Height	Diameter	Area	Volume	Weight	Density	Time	Number	Unit	Swell Factor	Quantity	Unit	Cost
	No 1 Truck Dump 03																			
	Structure's Demolition Cost	Steel Bld. Large	02220 110 0012	0.26	/CF	16	16	22								FT		5632	CF	1464
	Structure's Vol. Demolished																0.01	2	CY	
	Rubble's Weight (exclude steel)																			
	Truck's Capacity																			
	Haulage																			
	Transportation Cost Non Steel Truck																			
	Transportation Cost Non Steel Drive																			
	Disposal Cost Non Steel	ECDC	ECDC	35	/TON						2					CY		2	CY	70
	Subtotal																			[illegible]
	No. 2 Truck Dump	Steel Bld. Large	02220 110 0012	0.26	/CF	16	6	8								FT		768	CF	200
	Structure's Demolition Cost																0.01	1	CY	
	Structure's Vol. Demolished																			
	Rubble's Weight (exclude steel)																			
	Truck's Capacity																			
	Haulage																			
	Transportation Cost Non Steel Truck																			
	Transportation Cost Non Steel Drive																			
	Disposal Cost Non Steel	ECDC	ECDC	35	/TON						1					CY		1	CY	35
	Subtotal																			[illegible]
	No. 2 Truck Dump	Steel Bld. Large	02220 110 0012	0.26	/CF	200	30	1								FT		6000	CF	1560
	Structure's Demolition Cost																0.01	2	CY	
	Structure's Vol. Demolished																			
	Rubble's Weight (exclude steel)																			
	Truck's Capacity																			
	Haulage																			
	Transportation Cost Non Steel Truck																			
	Transportation Cost Non Steel Drive																			
	Disposal Cost Non Steel	ECDC	ECDC	35	/TON						2					CY		2	CY	70
	Subtotal																			[illegible]
	Footer's Demolition																			
	Demolition Cost	Concrete demolition	ConcreteDemo1	6.81	/CY	30	40	1								FT		44	CY	300
	Footer's Vol. Demolished																1.3	57	CY	
	Loading Cost	Front end loader 3 CY	02315 424 1300	1.43	/CY													57	CY	82
	Transportation Cost	12 CY (16 Ton) Dump Truck 1/2 mi. md. trip	02315 490 0320	3.49	/CY													57	CY	199
	Disposal Costs	On site disposal	02220 240 5550	7.6	/CY													57	CY	433
	Subtotal																			[illegible]
	Total																			[illegible]

Ref.	Description	Materials	Means Reference Number	Unit Cost	Unit	Length	Width	Height	Diameter	Area	Volume	Weight	Density	Time	Number	Unit	Swell Factor	Quantity	Unit	Cost
	No 2 Truck Dump 04																			
	Structure's Demolition Cost	Steel Bld. Large	02220 110 0012	0.26	/CF	16	16	22								FT		5632	CF	1464
	Structure's Vol. Demolished																0.01	2	CY	
	Rubble's Weight (exclude steel)																			
	Truck's Capacity																			
	Haulage																			
	Transportation Cost Non Steel Truck																			
	Transportation Cost Non Steel Drive																			
	Disposal Cost Non Steel	ECDC	ECDC	35	/TON						2					CY		2	CY	70
	Steel's Weight																			
	Truck's Capacity																			
	Haulage																			
	Transportation Cost Steel Truck																			
	Transportation Cost Steel Truck Drive																			
	Disposal Cost Steel																			
	Subtotal																			1534
	Equipment 's Disposal Cost																			
	Dismantling Cost																			
	Equipment 's Vol. Demolished																			
	Loading Costs																			
	Transport Costs																			
	Disposal Costs																			
	Subtotal																			
	Footer's Demolition																			
	Demolition Cost	Concrete demolition	ConcreteDemo1	6.81	/CY	120	8	1								FT		36	CY	245
	Footer's Vol. Demolished																1.3	47	CY	
	Loading Cost	Front end loader 3 CY	02315 424 1300	1.43	/CY													47	CY	67
	Transportation Cost	12 CY (16 Ton) Dump Truck 1/2 mi. rnd. trip	02315 490 0320	3.49	/CY													47	CY	164
	Disposal Costs	On site disposal	02220 240 5550	7.75	/CY													47	CY	364
	Subtotal																			840
	Concrete Demolition																			
	Demolition Cost																			
	Concrete's Vol. Demolished																			
	Loading Cost																			
	Transportation Cost																			
	Disposal Costs																			
	Subtotal																			
	Concrete Demolition																			
	Demolition Cost																			
	Concrete's Vol. Demolished																			
	Loading Cost																			
	Transportation Cost																			
	Disposal Costs																			
	Subtotal																			
	Total																			[illegible]

Ref.	Description	Materials	Means Reference Number	Unit Cost	Unit	Length	Width	Height	Diameter	Area	Volume	Weight	Density	Time	Number	Unit	Swell Factor	Quantity	Unit	Cost
	No 3 Truck Dump 05																			
	Structure's Demolition Cost	Steel Bld. Large	02220 110 0012	0.26	/CF	14	14	20								FT		3920	CF	1019
	Structure's Vol. Demolished																0.01	1	CY	
	Rubble's Weight (exclude steel)																			
	Truck's Capacity																			
	Haulage																			
	Transportation Cost Non Steel Truck																			
	Transportation Cost Non Steel Drive																			
	Disposal Cost Non Steel	ECDC	ECDC	35	/TON						1					CY		1	CY	35
	Steel's Weight																			
	Truck's Capacity																			
	Haulage																			
	Transportation Cost Steel Truck																			
	Transportation Cost Steel Truck Drive																			
	Disposal Cost Steel																			
	Subtotal																			1054
	Equipment 's Disposal Cost																			
	Dismantling Cost																			
	Equipment 's Vol. Demolished																			
	Loading Costs																			
	Transport Costs																			
	Disposal Costs																			
	Subtotal																			
	Footer's Demolition																			
	Demolition Cost	Concrete demolition	ConcreteDemo1	6.81	/CY	20	20	1								FT		15	CY	102
	Footer's Vol. Demolished																1.3	20	CY	
	Loading Cost	Front end loader 3 CY	02315 424 1300	1.43	/CY													20	CY	29
	Transportation Cost	12 CY (16 Ton) Dump Truck 1/2 mi. md. trip	02315 490 0320	3.49	/CY													20	CY	70
	Disposal Costs	On site disposal	02220 240 5550	7.75	/CY													20	CY	155
	Subtotal																			356
	Concrete Demolition																			
	Demolition Cost																			
	Concrete's Vol. Demolished																			
	Loading Cost																			
	Transportation Cost																			
	Disposal Costs																			
	Subtotal																			
	Concrete Demolition																			
	Demolition Cost																			
	Concrete's Vol. Demolished																			
	Loading Cost																			
	Transportation Cost																			
	Disposal Costs																			
	Subtotal																			
	Total																			1410

Ref.	Description	Materials	Means Reference Number	Unit Cost	Unit	Length	Width	Height	Diameter	Area	Volume	Weight	Density	Time	Number	Unit	Swell Factor	Quantity	Unit	Cost
	No 4 Truck Dump 06																			
	Structure's Demolition Cost	Steel Bld. Large	02220 110 0012	0.26	/CF	16	16	20								FT		5120	CF	1331
	Structure's Vol. Demolished																0.01	2	CY	
	Rubble's Weight (exclude steel)																			
	Truck's Capacity																			
	Haulage																			
	Transportation Cost Non Steel Truck																			
	Transportation Cost Non Steel Drive																			
	Disposal Cost Non Steel	ECDC	ECDC	35	/TON						2					CY		2	CY	70
	Steel's Weight																			
	Truck's Capacity																			
	Haulage																			
	Transportation Cost Steel Truck																			
	Transportation Cost Steel Truck Drive																			
	Disposal Cost Steel																			
	Subtotal																			1401
	Equipment 's Disposal Cost																			
	Dismantling Cost																			
	Equipment 's Vol. Demolished																			
	Loading Costs																			
	Transport Costs																			
	Disposal Costs																			
	Subtotal																			
	Footer's Demolition																			
	Demolition Cost	Concrete demolition	ConcreteDemo1	6.81	/CY	48	4	2								FT		14	CY	95
	Footer's Vol. Demolished																1.3	18	CY	
	Loading Cost	Front end loader 3 CY	02315 424 1300	1.43	/CY													18	CY	26
	Transportation Cost	12 CY (16 Ton) Dump Truck 1/2 mi. md. trip	02315 490 0320	3.49	/CY													18	CY	63
	Disposal Costs	On site disposal	02220 240 5550	7.75	/CY													18	CY	140
	Subtotal																			324
	Concrete Demolition																			
	Demolition Cost																			
	Concrete's Vol. Demolished																			
	Loading Cost																			
	Transportation Cost																			
	Disposal Costs																			
	Subtotal																			
	Concrete Demolition																			
	Demolition Cost																			
	Concrete's Vol. Demolished																			
	Loading Cost																			
	Transportation Cost																			
	Disposal Costs																			
	Subtotal																			
	Total																			1725

Ref.	Description	Materials	Means Reference Number	Unit Cost	Unit	Length	Width	Height	Diameter	Area	Volume	Weight	Density	Time	Number	Unit	Swell Factor	Quantity	Unit	Cost
	No 5 Truck Dump 07																			
	Structure's Demolition Cost	Steel Bld. Large	02220 110 0012	0.26	/CF	30	14	8								FT		3360	CF	874
	Structure's Vol. Demolished																0.01	1	CY	
	Rubble's Weight (exclude steel)																			
	Truck's Capacity																			
	Haulage																			
	Transportation Cost Non Steel Truck																			
	Transportation Cost Non Steel Drive																			
	Disposal Cost Non Steel	ECDC	ECDC	35	/TON						1					CY		1	CY	35
	Steel's Weight																			
	Truck's Capacity																			
	Haulage																			
	Transportation Cost Steel Truck																			
	Transportation Cost Steel Truck Drive																			
	Disposal Cost Steel																			
	Subtotal																			909
	Equipment 's Disposal Cost																			
	Dismantling Cost																			
	Equipment 's Vol. Demolished																			
	Loading Costs																			
	Transport Costs																			
	Disposal Costs																			
	Subtotal																			
	Footer's Demolition																			
	Demolition Cost	Concrete demolition	ConcreteDemo1	6.81	/CY	10	15	1								FT		6	CY	41
	Footer's Vol. Demolished																1.3	8	CY	
	Loading Cost	Front end loader 3 CY	02315 424 1300	1.43	/CY													8	CY	11
	Transportation Cost	12 CY (16 Ton) Dump Truck 1/2 mi. md. trip	02315 490 0320	3.49	/CY													8	CY	28
	Disposal Costs	On site disposal	02220 240 5550	7.75	/CY													8	CY	62
	Subtotal																			142
	Concrete Demolition																			
	Demolition Cost																			
	Concrete's Vol. Demolished																			
	Loading Cost																			
	Transportation Cost																			
	Disposal Costs																			
	Subtotal																			
	Concrete Demolition																			
	Demolition Cost																			
	Concrete's Vol. Demolished																			
	Loading Cost																			
	Transportation Cost																			
	Disposal Costs																			
	Subtotal																			
	Total																			1051

Ref.	Description	Materials	Means Reference Number	Unit Cost	Unit	Length	Width	Height	Diameter	Area	Volume	Weight	Density	Time	Number	Unit	Swell Factor	Quantity	Unit	Cost
	Conveyors Eight 08																			
	Structure's Demolition Cost	Steel Bid, Large	02220 110 0012	0.26	/CF	1980	4	4								FT		31680	CF	8237
	Structure's Vol. Demolished																0.01	12	CY	
	Rubble's Weight (exclude steel)																			
	Truck's Capacity																			
	Haulage																			
	Transportation Cost Non Steel Truck																			
	Transportation Cost Non Steel Drive																			
	Disposal Cost Non Steel	ECDC	ECDC	35	/TON						12					CY		12	CY	420
	Steel's Weight																			
	Truck's Capacity																			
	Haulage																			
	Transportation Cost Steel Truck																			
	Transportation Cost Steel Truck Drive																			
	Disposal Cost Steel																			
	Subtotal																			8657
	Equipment 's Disposal Cost																			
	Dismantling Cost																			
	Equipment 's Vol. Demolished																			
	Loading Costs																			
	Transport Costs																			
	Disposal Costs																			
	Subtotal																			
	Concrete Demolition																			
	Demolition Cost																			
	Concrete's Vol. Demolished																			
	Loading Cost																			
	Transportation Cost																			
	Disposal Costs																			
	Subtotal																			
	Concrete Demolition																			
	Demolition Cost																			
	Concrete's Vol. Demolished																			
	Loading Cost																			
	Transportation Cost																			
	Disposal Costs																			
	Subtotal																			
	Concrete Demolition																			
	Demolition Cost																			
	Concrete's Vol. Demolished																			
	Loading Cost																			
	Transportation Cost																			
	Disposal Costs																			
	Subtotal																			
	Total																			8657

Ref.	Description	Materials	Means Reference Number	Unit Cost	Unit	Length	Width	Height	Diameter	Area	Volume	Weight	Density	Time	Number	Unit	Swell Factor	Quantity	Unit	Cost
	Conveyor 48 inch 09																			
	Structure's Demolition Cost	Steel Bld. Large	02220 110 0012	0.26	/CF	1980	4	4								FT		31680	CF	8237
	Structure's Vol. Demolished																0.01	12	CY	
	Rubble's Weight (exclude steel)																			
	Truck's Capacity																			
	Haulage																			
	Transportation Cost Non Steel Truck																			
	Transportation Cost Non Steel Drive																			
	Disposal Cost Non Steel	ECDC	ECDC	35	/TON						12					CY		12	CY	420
	Steel's Weight																			
	Truck's Capacity																			
	Haulage																			
	Transportation Cost Steel Truck																			
	Transportation Cost Steel Truck Drive																			
	Disposal Cost Steel																			
	Subtotal																			8657
	Equipment 's Disposal Cost																			
	Dismantling Cost																			
	Equipment 's Vol. Demolished																			
	Loading Costs																			
	Transport Costs																			
	Disposal Costs																			
	Subtotal																			
	Floor Demolition																			
	Demolition Cost	Concrete demolition	ConcreteDemo1	6.81	/CY	10	15	1								FT		0	CY	0
	Floor's Vol. Demolished																1.3	0	CY	
	Loading Cost	Front end loader 3 CY	02315 424 1300	1.43	/CY													0	CY	0
	Transportation Cost	12 CY (16 Ton) Dump Truck 1/2 mi. md. trip	02315 490 0320	3.49	/CY													0	CY	0
	Disposal Costs	On site disposal	02220 240 5550	7.75	/CY													0	CY	0
	Subtotal																			0
	Concrete Demolition																			
	Demolition Cost																			
	Concrete's Vol. Demolished																			
	Loading Cost																			
	Transportation Cost																			
	Disposal Costs																			
	Subtotal																			
	Concrete Demolition																			
	Demolition Cost																			
	Concrete's Vol. Demolished																			
	Loading Cost																			
	Transportation Cost																			
	Disposal Costs																			
	Subtotal																			
	Total																			8657

Ref.	Description	Materials	Means Reference Number	Unit Cost	Unit	Length	Width	Height	Diameter	Area	Volume	Weight	Density	Time	Number	Unit	Swell Factor	Quantity	Unit	Cost
	No 4 Radial Stacker 10																			
	Structure's Demolition Cost	Steel Bld. Large	02220 110 0012	0.26	/CF	200	8	8								FT		12800	CF	3328
	Structure's Vol. Demolished																0.01	5	CY	
	Rubble's Weight (exclude steel)																			
	Truck's Capacity																			
	Haulage																			
	Transportation Cost Non Steel Truck																			
	Transportation Cost Non Steel Drive																			
	Disposal Cost Non Steel	ECDC	ECDC	35	/TON						5					CY		5	CY	175
	Steel's Weight																			
	Truck's Capacity																			
	Haulage																			
	Transportation Cost Steel Truck																			
	Transportation Cost Steel Truck Drive																			
	Disposal Cost Steel																			
	Subtotal																			3503
	Equipment 's Disposal Cost																			
	Dismantling Cost																			
	Equipment 's Vol. Demolished																			
	Loading Costs																			
	Transport Costs																			
	Disposal Costs																			
	Subtotal																			
	Floor Demolition																			
	Demolition Cost	Concrete demolition	ConcreteDemo1	6.81	/CY	10	15	1								FT		0	CY	0
	Floor's Vol. Demolished																1.3	0	CY	
	Loading Cost	Front end loader 3 CY	02315 424 1300	1.43	/CY													0	CY	0
	Transportation Cost	12 CY (16 Ton) Dump Truck 1/2 mi. md. trip	02315 490 0320	3.49	/CY													0	CY	0
	Disposal Costs	On site disposal	02220 240 5550	7.75	/CY													0	CY	0
	Subtotal																			0
	Concrete Demolition																			
	Demolition Cost																			
	Concrete's Vol. Demolished																			
	Loading Cost																			
	Transportation Cost																			
	Disposal Costs																			
	Subtotal																			
	Concrete Demolition																			
	Demolition Cost																			
	Concrete's Vol. Demolished																			
	Loading Cost																			
	Transportation Cost																			
	Disposal Costs																			
	Subtotal																			
	Total																			3503

Ref.	Description	Materials	Means Reference Number	Unit Cost	Unit	Length	Width	Height	Diameter	Area	Volume	Weight	Density	Time	Number	Unit	Swell Factor	Quantity	Unit	Cost
	No 5 Radial Stacker 11																			
	Structure's Demolition Cost	Steel Bld, Large	02220 110 0012	0.26	/CF	100	6	6								FT		3600	CF	936
	Structure's Vol. Demolished																0.01	1	CY	
	Rubble's Weight (exclude steel)																			
	Truck's Capacity																			
	Haulage																			
	Transportation Cost Non Steel Truck																			
	Transportation Cost Non Steel Drive																			
	Disposal Cost Non Steel	ECDC	ECDC	35	/TON						1					CY		1	CY	35
	Steel's Weight																			
	Truck's Capacity																			
	Haulage																			
	Transportation Cost Steel Truck																			
	Transportation Cost Steel Truck Drive																			
	Disposal Cost Steel																			
	Subtotal																			971
	Equipment 's Disposal Cost																			
	Dismantling Cost																			
	Equipment 's Vol. Demolished																			
	Loading Costs																			
	Transport Costs																			
	Disposal Costs																			
	Subtotal																			
	Floor Demolition																			
	Demolition Cost	Concrete demolition	ConcreteDemo1	6.81	/CY	0	0	0								FT		0	CY	0
	Floor's Vol. Demolished																1.3	0	CY	
	Loading Cost	Front end loader 3 CY	02315 424 1300	1.43	/CY													0	CY	0
	Transportation Cost	12 CY (16 Ton) Dump Truck 1/2 mi. rnd. trip	02315 490 0320	3.49	/CY													0	CY	0
	Disposal Costs	On site disposal	02220 240 5550	7.75	/CY													0	CY	0
	Subtotal																			0
	Concrete Demolition																			
	Demolition Cost																			
	Concrete's Vol. Demolished																			
	Loading Cost																			
	Transportation Cost																			
	Disposal Costs																			
	Subtotal																			
	Concrete Demolition																			
	Demolition Cost																			
	Concrete's Vol. Demolished																			
	Loading Cost																			
	Transportation Cost																			
	Disposal Costs																			
	Subtotal																			
	Total																			971

Ref.	Description	Materials	Means Reference Number	Unit Cost	Unit	Length	Width	Height	Diameter	Area	Volume	Weight	Density	Time	Number	Unit	Swell Factor	Quantity	Unit	Cost
	Conveyor Piers 12																			
	Structure's Demolition Cost	Steel Bld. Large	02220 110 0012	0.26	/CF	0	0	0								FT		0	CF	0
	Structure's Vol. Demolished																0.01	0	CY	
	Rubble's Weight (exclude steel)																			
	Truck's Capacity																			
	Haulage																			
	Transportation Cost Non Steel Truck																			
	Transportation Cost Non Steel Drive																			
	Disposal Cost Non Steel	ECDC	ECDC	35	/TON						0					CY		0	CY	0
	Steel's Weight																			
	Truck's Capacity																			
	Haulage																			
	Transportation Cost Steel Truck																			
	Transportation Cost Steel Truck Drive																			
	Disposal Cost Steel																			
	Subtotal																			0
	Equipment 's Disposal Cost																			
	Dismantling Cost																			
	Equipment 's Vol. Demolished																			
	Loading Costs																			
	Transport Costs																			
	Disposal Costs																			
	Subtotal																			
	Floor Demolition																			
	Demolition Cost	Concrete demolition	ConcreteDemo1	6.81	/CY	3	3	6							40	FT		80	CY	545
	Floor's Vol. Demolished																1.3	104	CY	
	Loading Cost	Front end loader 3 CY	02315 424 1300	1.43	/CY													104	CY	149
	Transportation Cost	12 CY (16 Ton) Dump Truck 1/2 mi. md. trip	02315 490 0320	3.49	/CY													104	CY	363
	Disposal Costs	On site disposal	02220 240 5550	7.76	/CY													104	CY	806
	Subtotal																			1863
	Concrete Demolition																			
	Demolition Cost																			
	Concrete's Vol. Demolished																			
	Loading Cost																			
	Transportation Cost																			
	Disposal Costs																			
	Subtotal																			
	Concrete Demolition																			
	Demolition Cost																			
	Concrete's Vol. Demolished																			
	Loading Cost																			
	Transportation Cost																			
	Disposal Costs																			
	Subtotal																			
	Total																			1863

Ref.	Description	Materials	Means Reference Number	Unit Cost	Unit	Length	Width	Height	Diameter	Area	Volume	Weight	Density	Time	Number	Unit	Swell Factor	Quantity	Unit	Cost
	Support Structure 13																			
	Structure's Demolition Cost	Steel Bld. Large	02220 110 0012	0.26	/CF	300	1	1							18	FT		5400	CF	1404
	Structure's Vol. Demolished																0.01	2	CY	
	Rubble's Weight (exclude steel)																			
	Truck's Capacity																			
	Haulage																			
	Transportation Cost Non Steel Truck																			
	Transportation Cost Non Steel Drive																			
	Disposal Cost Non Steel	ECDC	ECDC	35	/TON						2					CY		2	CY	70
	Steel's Weight																			
	Truck's Capacity																			
	Haulage																			
	Transportation Cost Steel Truck																			
	Transportation Cost Steel Truck Drive																			
	Disposal Cost Steel																			
	Subtotal																			1474
	Equipment 's Disposal Cost																			
	Dismantling Cost																			
	Equipment 's Vol. Demolished																			
	Loading Costs																			
	Transport Costs																			
	Disposal Costs																			
	Subtotal																			
	Floor Demolition																			
	Demolition Cost	Concrete demolition	ConcreteDemo1	6.81	/CY	0	0	0							0	FT		0	CY	0
	Floor's Vol. Demolished																1.3	0	CY	
	Loading Cost	Front end loader 3 CY	02315 424 1300	1.43	/CY													0	CY	0
	Transportation Cost	12 CY (16 Ton) Dump Truck 1/2 mi. rnd. trip	02315 490 0320	3.49	/CY													0	CY	0
	Disposal Costs	On site disposal	02220 240 5550	7.75	/CY													0	CY	0
	Subtotal																			0
	Concrete Demolition																			
	Demolition Cost																			
	Concrete's Vol. Demolished																			
	Loading Cost																			
	Transportation Cost																			
	Disposal Costs																			
	Subtotal																			
	Concrete Demolition																			
	Demolition Cost																			
	Concrete's Vol. Demolished																			
	Loading Cost																			
	Transportation Cost																			
	Disposal Costs																			
	Subtotal																			
	Total																			1474

Ref.	Description	Materials	Means Reference Number	Unit Cost	Unit	Length	Width	Height	Diameter	Area	Volume	Weight	Density	Time	Number	Unit	Swell Factor	Quantity	Unit	Cost
	Reclaim Tunnel 15																			
	Structure's Demolition Cost	Steel Bld. Large	02220 110 0012	0.26	/CF	1040	14	8								FT		116480	CF	30285
	Structure's Vol. Demolished																0.01	43	CY	
	Rubble's Weight (exclude steel)																			
	Truck's Capacity																			
	Haulage																			
	Transportation Cost Non Steel Truck																			
	Transportation Cost Non Steel Drive																			
	Disposal Cost Non Steel	ECDC	ECDC	35	/TON						43					CY		43	CY	1505
	Steel's Weight																			
	Truck's Capacity																			
	Haulage																			
	Transportation Cost Steel Truck																			
	Transportation Cost Steel Truck Drive																			
	Disposal Cost Steel																			
	Subtotal																			31790
	Escape Tunnel																			
	Structure's Demolition Cost	Steel Bld. Large	02220 110 0012	0.26	/CF			160	4							FT		2011	CF	523
	Structure's Vol. Demolished																0.01	1	CY	
	Rubble's Weight (exclude steel)																			
	Truck's Capacity																			
	Haulage																			
	Transportation Cost Non Steel Truck																			
	Transportation Cost Non Steel Drive																			
	Disposal Cost Non Steel	ECDC	ECDC	35	/TON						1					CY		1	CY	35
	Steel's Weight																			
	Truck's Capacity																			
	Haulage																			
	Transportation Cost Steel Truck																			
	Transportation Cost Steel Truck Drive																			
	Disposal Cost Steel																			
	Subtotal																			[illegible]
	Reclaim Tunnel 15																			
	Structure's Demolition Cost	Steel Bld. Large	02220 110 0012	0.26	/CF	4	4	4							2	FT		128	CF	33
	Structure's Vol. Demolished																0.01	0	CY	
	Rubble's Weight (exclude steel)																			
	Truck's Capacity																			
	Haulage																			
	Transportation Cost Non Steel Truck																			
	Transportation Cost Non Steel Drive																			
	Disposal Cost Non Steel	ECDC	ECDC	35	/TON						0					CY		0	CY	0
	Steel's Weight																			
	Truck's Capacity																			
	Haulage																			
	Transportation Cost Steel Truck																			
	Transportation Cost Steel Truck Drive																			
	Disposal Cost Steel																			
	Subtotal																			33
	Escape Tunnel																			
	Structure's Demolition Cost	Steel Bld. Large	02220 110 0012	0.26	/CF	8	8	8								FT		512	CF	133
	Structure's Vol. Demolished																0.01	0	CY	
	Rubble's Weight (exclude steel)																			
	Truck's Capacity																			
	Haulage																			
	Transportation Cost Non Steel Truck																			
	Transportation Cost Non Steel Drive																			
	Disposal Cost Non Steel	ECDC	ECDC	35	/TON						0					CY		0	CY	0
	Steel's Weight																			
	Truck's Capacity																			
	Haulage																			
	Transportation Cost Steel Truck																			
	Transportation Cost Steel Truck Drive																			
	Disposal Cost Steel																			
	Subtotal																			[illegible]
	Total																			[illegible]

Ref.	Description	Materials	Means Reference Number	Unit Cost	Unit	Length	Width	Height	Diameter	Area	Volume	Weight	Density	Time	Number	Unit	Swell Factor	Quantity	Unit	Cost
	Water Tank 14																			
	Structure's Demolition Cost	Steel Bld. Large	02220 110 0012	0.26	/CF						21390					CF		21390	CF	5561
	Structure's Vol. Demolished																0.01	8	CY	
	Rubble's Weight (exclude steel)																			
	Truck's Capacity																			
	Haulage																			
	Transportation Cost Non Steel Truck																			
	Transportation Cost Non Steel Drive																			
	Disposal Cost Non Steel	ECDC	ECDC	35	/TON						8					CY		8	CY	280
	Steel's Weight																			
	Truck's Capacity																			
	Haulage																			
	Transportation Cost Steel Truck																			
	Transportation Cost Steel Truck Drive																			
	Disposal Cost Steel																			
	Subtotal																			5841
	Equipment 's Disposal Cost																			
	Dismantling Cost																			
	Equipment 's Vol. Demolished																			
	Loading Costs																			
	Transport Costs																			
	Disposal Costs																			
	Subtotal																			
	Floor Demolition																			
	Demolition Cost	Concrete demolition	ConcreteDemo1	6.81	/CY						90					CY		90	CY	613
	Floor's Vol. Demolished																1.3	117	CY	
	Loading Cost	Front end loader 3 CY	02315 424 1300	1.43	/CY													117	CY	167
	Transportation Cost	12 CY (16 Ton) Dump Truck 1/2 mi. md. trip	02315 490 0320	3.49	/CY													117	CY	408
	Disposal Costs	On site disposal	02220 240 5560	7.75	/CY													117	CY	907
	Subtotal																			[illegible]
	Concrete Demolition																			
	Demolition Cost																			
	Concrete's Vol. Demolished																			
	Loading Cost																			
	Transportation Cost																			
	Disposal Costs																			
	Subtotal																			
	Concrete Demolition																			
	Demolition Cost																			
	Concrete's Vol. Demolished																			
	Loading Cost																			
	Transportation Cost																			
	Disposal Costs																			
	Subtotal																			
	Total																			[illegible]

Ref.	Description	Materials	Means Reference Number	Unit Cost	Unit	Length	Width	Height	Diameter	Area	Volume	Weight	Density	Time	Number	Unit	Swell Factor	Quantity	Unit	Cost
	Portable Hopper 16																			
	Structure's Demolition Cost	Steel Bld. Large	02220 110 0012	0.26	/CF	20	12	14								FT		3360	CF	874
	Structure's Vol. Demolished																0.01	1	CY	
	Rubble's Weight (exclude steel)																			
	Truck's Capacity																			
	Haulage																			
	Transportation Cost Non Steel Truck																			
	Transportation Cost Non Steel Drive																			
	Disposal Cost Non Steel	ECDC	ECDC	35	/TON						1					CY		1	CY	35
	Steel's Weight																			
	Truck's Capacity																			
	Haulage																			
	Transportation Cost Steel Truck																			
	Transportation Cost Steel Truck Drive																			
	Disposal Cost Steel																			
	Subtotal																			909
	Equipment 's Disposal Cost																			
	Dismantling Cost																			
	Equipment 's Vol. Demolished																			
	Loading Costs																			
	Transport Costs																			
	Disposal Costs																			
	Subtotal																			
	Pad's Demolition																			
	Demolition Cost	Concrete demolition	ConcreteDemo1	6.81	/CY	0	0	0								FT		0	CY	0
	Pad's Vol. Demolished																1.3	0	CY	
	Loading Cost	Front end loader 3 CY	02315 424 1300	1.43	/CY													0	CY	0
	Transportation Cost	12 CY (16 Ton) Dump Truck 1/2 mi. md. trip	02315 490 0320	3.49	/CY													0	CY	0
	Disposal Costs	On site disposal	02220 240 5550	7.75	/CY													0	CY	0
	Subtotal																			0
	Concrete Demolition																			
	Demolition Cost																			
	Concrete's Vol. Demolished																			
	Loading Cost																			
	Transportation Cost																			
	Disposal Costs																			
	Subtotal																			
	Concrete Demolition																			
	Demolition Cost																			
	Concrete's Vol. Demolished																			
	Loading Cost																			
	Transportation Cost																			
	Disposal Costs																			
	Subtotal																			
	Total																			909

Ref.	Description	Materials	Means Reference Number	Unit Cost	Unit	Length	Width	Height	Diameter	Area	Volume	Weight	Density	Time	Number	Unit	Swell Factor	Quantity	Unit	Cost
	Trailer 17																			
	Structure's Demolition Cost	Steel Bld. Large	02220 110 0012	0.26	/CF	30	8	8								FT		1920	CF	499
	Structure's Vol. Demolished																0.01	1	CY	
	Rubble's Weight (exclude steel)																			
	Truck's Capacity																			
	Haulage																			
	Transportation Cost Non Steel Truck																			
	Transportation Cost Non Steel Drive																			
	Disposal Cost Non Steel	ECDC	ECDC	35	/TON						25					CY		25	CY	875
	Steel's Weight																			
	Truck's Capacity																			
	Haulage																			
	Transportation Cost Steel Truck																			
	Transportation Cost Steel Truck Drive																			
	Disposal Cost Steel																			
	Subtotal																			1374
	Equipment 's Disposal Cost																			
	Dismantling Cost																			
	Equipment 's Vol. Demolished																			
	Loading Costs																			
	Transport Costs																			
	Disposal Costs																			
	Subtotal																			
	Concrete Demolition																			
	Demolition Cost																			
	Concrete's Vol. Demolished																			
	Loading Cost																			
	Transportation Cost																			
	Disposal Costs																			
	Subtotal																			
	Concrete Demolition																			
	Demolition Cost																			
	Concrete's Vol. Demolished																			
	Loading Cost																			
	Transportation Cost																			
	Disposal Costs																			
	Subtotal																			
	Concrete Demolition																			
	Demolition Cost																			
	Concrete's Vol. Demolished																			
	Loading Cost																			
	Transportation Cost																			
	Disposal Costs																			
	Subtotal																			
	Total																			1374

Ref.	Description	Materials	Means Reference Number	Unit Cost	Unit	Length	Width	Height	Diameter	Area	Volume	Weight	Density	Time	Number	Unit	Swell Factor	Quantity	Unit	Cost
	Transfer Bin 18																			
	Structure's Demolition Cost	Steel Bld. Large	02220 110 0012	0.26	/CF			30	16							FT		6032	CF	1568
	Structure's Vol. Demolished																0.01	2	CY	
	Rubble's Weight (exclude steel)																			
	Truck's Capacity																			
	Haulage																			
	Transportation Cost Non Steel Truck																			
	Transportation Cost Non Steel Drive																			
	Disposal Cost Non Steel	ECDC	ECDC	35	/TON						2					CY		2	CY	70
	Steel's Weight																			
	Truck's Capacity																			
	Haulage																			
	Transportation Cost Steel Truck																			
	Transportation Cost Steel Truck Drive																			
	Disposal Cost Steel																			
	Subtotal																			1638
	Equipment 's Disposal Cost																			
	Dismantling Cost																			
	Equipment 's Vol. Demolished																			
	Loading Costs																			
	Transport Costs																			
	Disposal Costs																			
	Subtotal																			
	Pad's Demolition																			
	Demolition Cost	Concrete demolition	ConcreteDemo1	6.81	/CY	20	20	1								FT		15	CY	102
	Pad's Vol. Demolished																1.3	20	CY	
	Loading Cost	Front end loader 3 CY	02315 424 1300	1.43	/CY													20	CY	29
	Transportation Cost	12 CY (16 Ton) Dump Truck 1/2 mi. rnd. trip	02315 490 0320	3.49	/CY													20	CY	70
	Disposal Costs	On site disposal	02220 240 5550	7.75	/CY													20	CY	155
	Subtotal																			[illegible]
	Concrete Demolition																			
	Demolition Cost																			
	Concrete's Vol. Demolished																			
	Loading Cost																			
	Transportation Cost																			
	Disposal Costs																			
	Subtotal																			
	Concrete Demolition																			
	Demolition Cost																			
	Concrete's Vol. Demolished																			
	Loading Cost																			
	Transportation Cost																			
	Disposal Costs																			
	Subtotal																			
	Total																			[illegible]

Ref.	Description	Materials	Means Reference Number	Unit Cost	Unit	Length	Width	Height	Diameter	Area	Volume	Weight	Density	Time	Number	Unit	Swell Factor	Quantity	Unit	Cost
	Preparation Plant 19																			
	Structure's Demolition Cost	Steel Bld, Large	02220 110 0012	0.26	/CF	110	80	80								FT		704000	CF	183040
	Structure's Vol. Demolished																0.01	261	CY	
	Rubble's Weight (exclude steel)																			
	Truck's Capacity																			
	Haulage																			
	Transportation Cost Non Steel Truck																			
	Transportation Cost Non Steel Drive																			
	Disposal Cost Non Steel	ECDC	ECDC	35	/TON						261					CY		261	CY	9135
	Steel's Weight																			
	Truck's Capacity																			
	Haulage																			
	Transportation Cost Steel Truck																			
	Transportation Cost Steel Truck Drive																			
	Disposal Cost Steel																			
	Subtotal																			192175
	Equipment 's Disposal Cost																			
	Dismantling Cost																			
	Equipment 's Vol. Demolished																			
	Loading Costs																			
	Transport Costs																			
	Disposal Costs																			
	Subtotal																			
	Concrete Demolition																			
	Demolition Cost	Concrete demolition	ConcreteDemo1	6.81	/CY	110	80	1								FT		326	CY	2220
	Concrete's Vol. Demolished																1.3	424	CY	
	Loading Cost	Front end loader 3 CY	02315 424 1300	1.43	/CY													424	CY	606
	Transportation Cost	12 CY (16 Ton) Dump Truck 1/2 ml. md. trip	02315 490 0320	3.49	/CY													424	CY	1480
	Disposal Costs	On site disposal	02220 240 5550	7.75	/CY													424	CY	3286
	Subtotal																			7592
	Pad's Demolition																			
	Demolition Cost	Concrete demolition	ConcreteDemo1	6.81	/CY						75					CY		75	CY	511
	Pad's Vol. Demolished																1.3	98	CY	
	Loading Cost	Front end loader 3 CY	02315 424 1300	1.43	/CY													98	CY	140
	Transportation Cost	12 CY (16 Ton) Dump Truck 1/2 ml. md. trip	02315 490 0320	3.49	/CY													98	CY	342
	Disposal Costs	On site disposal	02220 240 5550	7.75	/CY													98	CY	760
	Subtotal																			1753
	Concrete Demolition																			
	Demolition Cost																			
	Concrete's Vol. Demolished																			
	Loading Cost																			
	Transportation Cost																			
	Disposal Costs																			
	Subtotal																			
	Total																			201520

Ref.	Description	Materials	Means Reference Number	Unit Cost	Unit	Length	Width	Height	Diameter	Area	Volume	Weight	Density	Time	Number	Unit	Swell Factor	Quantity	Unit	Cost
	Substation 20																			
	Structure's Demolition Cost	Steel Bld. Large	02220 110 0012	0.26	/CF	20	27	8								FT		4320	CF	1123
	Structure's Vol. Demolished																0.01	2	CY	
	Rubble's Weight (exclude steel)																			
	Truck's Capacity																			
	Haulage																			
	Transportation Cost Non Steel Truck																			
	Transportation Cost Non Steel Drive																			
	Disposal Cost Non Steel	ECDC	ECDC	35	/TON						64					CY		64	CY	2240
	Steel's Weight																			
	Truck's Capacity																			
	Haulage																			
	Transportation Cost Steel Truck																			
	Transportation Cost Steel Truck Drive																			
	Disposal Cost Steel																			
	Subtotal																			3363
	Transformers 's Disposal Cost	Mechanical equipment heavy	15055 300 3600	850	/ton							2				Ton		2	Ton	1700
	Fence Cost	Chain link remove 8'-10'	02220 220 1700	3.05	/LF	180										FT		180	FT	549
	Equipment 's Vol. Demolished																			
	Loading Costs																			
	Transport Costs																			
	Disposal Costs																			
	Subtotal																			2249
	Concrete Demolition																			
	Demolition Cost	Concrete demolition	ConcreteDemo1	6.81	/CY	20	27	0.5								FT		10	CY	
	Concrete's Vol. Demolished																1.3	13	CY	
	Loading Cost	Front end loader 3 CY	02315 424 1300	1.43	/CY													13	CY	19
	Transportation Cost	12 CY (16 Ton) Dump Truck 1/2 mi. rnd. trip	02315 490 0320	3.49	/CY													13	CY	45
	Disposal Costs	On site disposal	02220 240 5550	7.75	/CY													13	CY	101
	Subtotal																			165
	Concrete Demolition																			
	Demolition Cost																			
	Concrete's Vol. Demolished																			
	Loading Cost																			
	Transportation Cost																			
	Disposal Costs																			
	Subtotal																			
	Concrete Demolition																			
	Demolition Cost																			
	Concrete's Vol. Demolished																			
	Loading Cost																			
	Transportation Cost																			
	Disposal Costs																			
	Subtotal																			
	Total																			5777

Ref.	Description	Materials	Means Reference Number	Unit Cost	Unit	Length	Width	Height	Diameter	Area	Volume	Weight	Density	Time	Number	Unit	Swell Factor	Quantity	Unit	Cost
	Fuel Storage 21																			
	Structure's Demolition Cost	3000 gal. to 5000 gal. tank	02115 200 0110	600	Ea.										2	EA		2	EA	1200
	Structure's Vol. Demolished																			
	Rubble's Weight (exclude steel)																			
	Truck's Capacity																			
	Haulage																			
	Transportation Cost Non Steel Truck																			
	Transportation Cost Non Steel Drive																			
	Disposal Cost Non Steel	ECDC	ECDC	35	/TON						0					CY		0	CY	0
	Steel's Weight																			
	Truck's Capacity																			
	Haulage																			
	Transportation Cost Steel Truck																			
	Transportation Cost Steel Truck Drive																			
	Disposal Cost Steel																			
	Subtotal																			1200
	Trailer																			
	Structure's Demolition Cost	Mixed Materials Bld. Large	02220 110 0100	0.28	/CF	10	50	8								FT		4000	CF	1120
	Structure's Vol. Demolished																0.01	1	CY	
	Rubble's Weight (exclude steel)																			
	Truck's Capacity																			
	Haulage																			
	Transportation Cost Non Steel Truck																			
	Transportation Cost Non Steel Drive																			
	Disposal Cost Non Steel	ECDC	ECDC	35	/TON						1					CY		1	CY	35
	Steel's Weight																			
	Truck's Capacity																			
	Haulage																			
	Transportation Cost Steel Truck																			
	Transportation Cost Steel Truck Drive																			
	Disposal Cost Steel																			
	Subtotal																			1155
	Equipment 's Disposal Cost																			
	Dismantling Cost																			
	Equipment 's Vol. Demolished																			
	Loading Costs																			
	Transport Costs																			
	Disposal Costs																			
	Subtotal																			
	Concrete Demolition																			
	Demolition Cost	Concrete demolition	ConcreteDemo1	6.81	/CY	30	30	0.68							4	FT		91	CY	
	Concrete's Vol. Demolished																1.3	118	CY	
	Loading Cost	Front end loader 3 CY	02315 424 1300	1.43	/CY													118	CY	169
	Transportation Cost	12 CY (16 Ton) Dump Truck 1/2 mi. md. trip	02315 490 0320	3.49	/CY													118	CY	412
	Disposal Costs	On site disposal	02220 240 5550	7.75	/CY													118	CY	915
	Subtotal																			1496
	Concrete Demolition																			
	Demolition Cost	Concrete demolition	ConcreteDemo1	6.81	/CY	30	30	0.5								FT		17	CY	
	Concrete's Vol. Demolished																1.3	22	CY	
	Loading Cost	Front end loader 3 CY	02315 424 1300	1.43	/CY													22	CY	31
	Transportation Cost	12 CY (16 Ton) Dump Truck 1/2 mi. md. trip	02315 490 0320	3.49	/CY													22	CY	77
	Disposal Costs	On site disposal	02220 240 5550	7.75	/CY													22	CY	171
	Subtotal																			279
	Total																			4130

Ref.	Description	Materials	Means Reference Number	Unit Cost	Unit	Length	Width	Height	Diameter	Area	Volume	Weight	Density	Time	Number	Unit	Swell Factor	Quantity	Unit	Cost
	Reclaim Control Bld 22																			
	Structure's Demolition Cost	Steel Bld. Large	02220 110 0012	0.26	/CF	22	16	12								FT		4224	CF	1098
	Structure's Vol. Demolished																0.01	2	CY	
	Rubble's Weight (exclude steel)																			
	Truck's Capacity																			
	Haulage																			
	Transportation Cost Non Steel Truck																			
	Transportation Cost Non Steel Drive																			
	Disposal Cost Non Steel	ECDC	ECDC	35	/TON						2					CY		2	CY	70
	Steel's Weight																			
	Truck's Capacity																			
	Haulage																			
	Transportation Cost Steel Truck																			
	Transportation Cost Steel Truck Drive																			
	Disposal Cost Steel																			
	Subtotal																			1168
	Equipment 's Disposal Cost																			
	Dismantling Cost																			
	Equipment 's Vol. Demolished																			
	Loading Costs																			
	Transport Costs																			
	Disposal Costs																			
	Subtotal																			
	Pad's Demolition																			
	Demolition Cost	Concrete demolition	ConcreteDemo1	6.81	/CY	22	22	0.5								FT		9	CY	61
	Pad's Vol. Demolished																1.3	12	CY	
	Loading Cost	Front end loader 3 CY	02315 424 1300	1.43	/CY													12	CY	17
	Transportation Cost	12 CY (16 Ton) Dump Truck 1/2 mi. md. trip	02315 490 0320	3.49	/CY													12	CY	42
	Disposal Costs	On site disposal	02220 240 5550	7.75	/CY													12	CY	93
	Subtotal																			215
	Concrete Demolition																			
	Demolition Cost																			
	Concrete's Vol. Demolished																			
	Loading Cost																			
	Transportation Cost																			
	Disposal Costs																			
	Subtotal																			
	Concrete Demolition																			
	Demolition Cost																			
	Concrete's Vol. Demolished																			
	Loading Cost																			
	Transportation Cost																			
	Disposal Costs																			
	Subtotal																			
	Total																			1381

Ref.	Description	Materials	Means Reference Number	Unit Cost	Unit	Length	Width	Height	Diameter	Area	Volume	Weight	Density	Time	Number	Unit	Swell Factor	Quantity	Unit	Cost
	Sample House 23																			
	Structure's Demolition Cost	Steel Bld. Large	02220 110 0012	0.26	/CF	22	22	30								FT		14520	CF	3775
	Structure's Vol. Demolished																0.01	5	CY	
	Rubble's Weight (exclude steel)																			
	Truck's Capacity																			
	Haulage																			
	Transportation Cost Non Steel Truck																			
	Transportation Cost Non Steel Drive																			
	Disposal Cost Non Steel	ECDC	ECDC	35	/TON						5					CY		5	CY	175
	Steel's Weight																			
	Truck's Capacity																			
	Haulage																			
	Transportation Cost Steel Truck																			
	Transportation Cost Steel Truck Drive																			
	Disposal Cost Steel																			
	Subtotal																			3950
	Equipment 's Disposal Cost																			
	Dismantling Cost																			
	Equipment 's Vol. Demolished																			
	Loading Costs																			
	Transport Costs																			
	Disposal Costs																			
	Subtotal																			
	Pad's Demolition																			
	Demolition Cost	Concrete demolition	ConcreteDemo1	6.81	/CY	22	22	0.5								FT		9	CY	61
	Pad's Vol. Demolished																1.3	12	CY	
	Loading Cost	Front end loader 3 CY	02315 424 1300	1.43	/CY													12	CY	17
	Transportation Cost	12 CY (16 Ton) Dump Truck 1/2 mi. rnd. trip	02315 490 0320	3.49	/CY													12	CY	42
	Disposal Costs	On site disposal	02220 240 5550	7.75	/CY													12	CY	93
	Subtotal																			213
	Concrete Demolition																			
	Demolition Cost																			
	Concrete's Vol. Demolished																			
	Loading Cost																			
	Transportation Cost																			
	Disposal Costs																			
	Subtotal																			
	Concrete Demolition																			
	Demolition Cost																			
	Concrete's Vol. Demolished																			
	Loading Cost																			
	Transportation Cost																			
	Disposal Costs																			
	Subtotal																			
	Total																			4163

Ref.	Description	Materials	Means Reference Number	Unit Cost	Unit	Length	Width	Height	Diameter	Area	Volume	Weight	Density	Time	Number	Unit	Swell Factor	Quantity	Unit	Cost
	Stacking Tube 24																			
	Structure's Demolition Cost	Concrete Bld. Large	02220 110 0050	0.37	/CF			200	20						4	FT		62832	CF	23248
	Structure's Vol. Demolished																0.01	23	CY	
	Rubble's Weight (exclude steel)																			
	Truck's Capacity																			
	Haulage																			
	Transportation Cost Non Steel Truck																			
	Transportation Cost Non Steel Drive																			
	Disposal Cost Non Steel	ECDC	ECDC	35	/TON						23					CY		23	CY	805
	Steel's Weight																			
	Truck's Capacity																			
	Haulage																			
	Transportation Cost Steel Truck																			
	Transportation Cost Steel Truck Drive																			
	Disposal Cost Steel																			
	Subtotal																			24053
	Equipment 's Disposal Cost																			
	Dismantling Cost																			
	Equipment 's Vol. Demolished																			
	Loading Costs																			
	Transport Costs																			
	Disposal Costs																			
	Subtotal																			
	Pad's Demolition																			
	Demolition Cost	Concrete demolition	ConcreteDemo1	6.81	/CY					186					4	CY		744	CY	5067
	Pad's Vol. Demolished																1.3	967	CY	
	Loading Cost	Front end loader 3 CY	02315 424 1300	1.43	/CY													967	CY	1383
	Transportation Cost	12 CY (16 Ton) Dump Truck 1/2 mi. rnd. trip	02315 490 0320	3.49	/CY													967	CY	3375
	Disposal Costs	On site disposal	02220 240 5550	7.75	/CY													967	CY	7494
	Subtotal																			17319
	Concrete Demolition																			
	Demolition Cost																			
	Concrete's Vol. Demolished																			
	Loading Cost																			
	Transportation Cost																			
	Disposal Costs																			
	Subtotal																			
	Concrete Demolition																			
	Demolition Cost																			
	Concrete's Vol. Demolished																			
	Loading Cost																			
	Transportation Cost																			
	Disposal Costs																			
	Subtotal																			
	Total																			41372

Ref.	Description	Materials	Means Reference Number	Unit Cost	Unit	Length	Width	Height	Diameter	Area	Volume	Weight	Density	Time	Number	Unit	Swell Factor	Quantity	Unit	Cost
	Loadout Silo 25																			
	Structure's Demolition Cost	Concrete Bld. Large	02220 110 0050	0.37	/CF			200	50						4	FT		392699	CF	145299
	Structure's Vol. Demolished																			
	Rubble's Weight (exclude steel)																			
	Truck's Capacity																			
	Haulage																			
	Transportation Cost Non Steel Truck																			
	Transportation Cost Non Steel Drive																			
	Disposal Cost Non Steel	ECDC	ECDC	35	/TON						145					CY		145	CY	5075
	Steel's Weight																			
	Truck's Capacity																			
	Haulage																			
	Transportation Cost Steel Truck																			
	Transportation Cost Steel Truck Drive																			
	Disposal Cost Steel																			
	Subtotal																			150374
	Equipment 's Disposal Cost																			
	Dismantling Cost																			
	Equipment 's Vol. Demolished																			
	Loading Costs																			
	Transport Costs																			
	Disposal Costs																			
	Subtotal																			
	Pad's Demolition																			
	Demolition Cost	Concrete demolition	ConcreteDemo1	6.81	/CY					2327					1	CY		2327	CY	15847
	Pad's Vol. Demolished																1.3	3025	CY	
	Loading Cost	Front end loader 3 CY	02315 424 1300	1.43	/CY													3025	CY	4326
	Transportation Cost	12 CY (16 Ton) Dump Truck 1/2 mi. rnd. trip	02315 490 0320	3.49	/CY													3025	CY	10557
	Disposal Costs	On site disposal	02220 240 5550	7.75	/CY													3025	CY	23444
	Subtotal																			54174
	Concrete Demolition																			
	Demolition Cost																			
	Concrete's Vol. Demolished																			
	Loading Cost																			
	Transportation Cost																			
	Disposal Costs																			
	Subtotal																			
	Concrete Demolition																			
	Demolition Cost																			
	Concrete's Vol. Demolished																			
	Loading Cost																			
	Transportation Cost																			
	Disposal Costs																			
	Subtotal																			
	Total																			204548

Ref.	Description	Materials	Means Reference Number	Unit Cost	Unit	Length	Width	Height	Diameter	Area	Volume	Weight	Density	Time	Number	Unit	Swell Factor	Quantity	Unit	Cost
	Railroad 26																			
	Structure's Demolition Cost																			
	Structure's Vol. Demolished																			
	Rubble's Weight (exclude steel)																			
	Truck's Capacity																			
	Haulage																			
	Transportation Cost Non Steel Truck																			
	Transportation Cost Non Steel Drive																			
	Disposal Cost Non Steel																			
	Steel's Weight																			
	Truck's Capacity																			
	Haulage																			
	Transportation Cost Steel Truck																			
	Transportation Cost Steel Truck Drive																			
	Disposal Cost Steel																			
	Subtotal																			
	Equipment 's Disposal Cost	Rail Road Removal	Contractors	10000	/Mi	8100										LF		1.5	Mi	15000
	Dismantling Cost																			
	Equipment 's Vol. Demolished																			
	Loading Costs																			
	Transport Costs																			
	Disposal Costs																			
	Subtotal																			15000
	Concrete Demolition																			
	Demolition Cost																			
	Concrete's Vol. Demolished																			
	Loading Cost																			
	Transportation Cost																			
	Disposal Costs																			
	Subtotal																			
	Concrete Demolition																			
	Demolition Cost																			
	Concrete's Vol. Demolished																			
	Loading Cost																			
	Transportation Cost																			
	Disposal Costs																			
	Subtotal																			
	Concrete Demolition																			
	Demolition Cost																			
	Concrete's Vol. Demolished																			
	Loading Cost																			
	Transportation Cost																			
	Disposal Costs																			
	Subtotal																			
	Total																			15000

Ref.	Description	Materials	Means Reference Number	Unit Cost	Unit	Length	Width	Height	Diameter	Area	Volume	Weight	Density	Time	Number	Unit	Swell Factor	Quantity	Unit	Cost
	Powerline 27																			
	Structure's Demolition Cost																			
	Structure's Vol. Demolished																			
	Rubble's Weight (exclude steel)																			
	Truck's Capacity																			
	Haulage																			
	Transportation Cost Non Steel Truck																			
	Transportation Cost Non Steel Drive																			
	Disposal Cost Non Steel																			
	Steel's Weight																			
	Truck's Capacity																			
	Haulage																			
	Transportation Cost Steel Truck																			
	Transportation Cost Steel Truck Drive																			
	Disposal Cost Steel																			
	Subtotal																			
	Equipment 's Disposal Cost	Powerpole	Hiewaths	100	EA										25	EA.		25	EA.	2500
	Dismantling Cost																			
	Equipment 's Vol. Demolished																			
	Loading Costs																			
	Transport Costs																			
	Disposal Costs																			
	Subtotal																			2500
	Concrete Demolition																			
	Demolition Cost																			
	Concrete's Vol. Demolished																			
	Loading Cost																			
	Transportation Cost																			
	Disposal Costs																			
	Subtotal																			
	Concrete Demolition																			
	Demolition Cost																			
	Concrete's Vol. Demolished																			
	Loading Cost																			
	Transportation Cost																			
	Disposal Costs																			
	Subtotal																			
	Concrete Demolition																			
	Demolition Cost																			
	Concrete's Vol. Demolished																			
	Loading Cost																			
	Transportation Cost																			
	Disposal Costs																			
	Subtotal																			
	Total																			2500

Ref.	Description	Materials	Means Reference Number	Unit Cost	Unit	Length	Width	Height	Diameter	Area	Volume	Weight	Density	Time	Number	Unit	Swell Factor	Quantity	Unit	Cost
	Aphalt 28																			
	Structure's Demolition Cost																			
	Structure's Vol. Demolished																			
	Rubble's Weight (exclude steel)																			
	Truck's Capacity																			
	Haulage																			
	Transportation Cost Non Steel Truck																			
	Transportation Cost Non Steel Drive																			
	Disposal Cost Non Steel																			
	Steel's Weight																			
	Truck's Capacity																			
	Haulage																			
	Transportation Cost Steel Truck																			
	Transportation Cost Steel Truck Drive																			
	Disposal Cost Steel																			
	Subtotal																			
	Equipment 's Disposal Cost																			
	Dismantling Cost																			
	Equipment 's Vol. Demolished																			
	Loading Costs																			
	Transport Costs																			
	Disposal Costs																			
	Subtotal																			
	Haul Road																			
	Pavement's Demolition																			
	Demolition Cost	Pavement Removal 4-6"	02220 250 5050	6.75	/SY	4700	24									FT		12533	SY	84598
	Pavement's Vol. Demolished							0.5									1.3	2715	CY	
	Loading Cost																			
	Transportation Cost																			
	Disposal Costs	On site disposal	02220 240 5550	7.75	/CY													2715	CY	21041
	Subtotal																			[illegible]
	Parking Lot																			
	Pavement's Demolition																			
	Demolition Cost	Pavement Removal 4-6"	02220 250 5050	6.75	/SY	50	140									FT		778	SY	5252
	Pavement's Vol. Demolished							0.25										84	CY	
	Loading Cost																			
	Transportation Cost																			
	Disposal Costs	On site disposal	02220 240 5550	7.75	/CY													84	CY	651
	Subtotal																			[illegible]
	Concrete Demolition																			
	Demolition Cost																			
	Concrete's Vol. Demolished																			
	Loading Cost																			
	Transportation Cost																			
	Disposal Costs																			
	Subtotal																			
	Total																			118542

Ref.	Description	Materials	Means Reference Number	Unit Cost	Unit	Length	Width	Height	Diameter	Area	Volume	Weight	Density	Time	Number	Unit	Swell Factor	Quantity	Unit	Cost
	Pumphouse 29																			
	Structure's Demolition Cost	Mixed Materials Bld. Large	02220 110 0100	0.28	/CF	40	26	10								FT		10400	CF	2912
	Structure's Vol. Demolished																			
	Rubble's Weight (exclude steel)																			
	Truck's Capacity																			
	Haulage																			
	Transportation Cost Non Steel Truck																			
	Transportation Cost Non Steel Drive																			
	Disposal Cost Non Steel	ECDC	ECDC	35	/TON						135					CY		135	CY	4725
	Steel's Weight																			
	Truck's Capacity																			
	Haulage																			
	Transportation Cost Steel Truck																			
	Transportation Cost Steel Truck Drive																			
	Disposal Cost Steel																			
	Subtotal																			7637
	Pumphouse																			
	Structure's Demolition Cost	Steel Bld. Large	02220 110 0012	0.26	/CF			8	12						1	Ft.		905	CF	235
	Structure's Vol. Demolished																0.01	5	CY	
	Rubble's Weight (exclude steel)																			
	Truck's Capacity																			
	Haulage																			
	Transportation Cost Non Steel Truck																			
	Transportation Cost Non Steel Drive																			
	Disposal Cost Non Steel	ECDC	ECDC	35	/TON						5					CY		5	CY	175
	Steel's Weight																			
	Truck's Capacity																			
	Haulage																			
	Transportation Cost Steel Truck																			
	Transportation Cost Steel Truck Drive																			
	Disposal Cost Steel																			
	Subtotal																			410
	Pumphouse																			
	Structure's Demolition Cost	Concrete Bld. Large	02220 110 0050	0.37	/CF			30	21						1	Ft.		10391	CF	3846
	Structure's Vol. Demolished																0.01	4	CY	
	Rubble's Weight (exclude steel)																			
	Truck's Capacity																			
	Haulage																			
	Transportation Cost Non Steel Truck																			
	Transportation Cost Non Steel Drive																			
	Disposal Cost Non Steel	ECDC	ECDC	35	/TON						4					CY		4	CY	140
	Steel's Weight																			
	Truck's Capacity																			
	Haulage																			
	Transportation Cost Steel Truck																			
	Transportation Cost Steel Truck Drive																			
	Disposal Cost Steel																			
	Subtotal																			3986
	Equipment 's Disposal Cost																			
	Dismantling Cost																			
	Equipment 's Vol. Demolished																			
	Loading Costs																			
	Transport Costs																			
	Disposal Costs																			
	Subtotal																			
	Pad's Demolition																			
	Demolition Cost	Concrete demolition	ConcreteDemo1	6.81	/CY	40	26	0.5								FT		19	CY	129
	Pad's Vol. Demolished																1.3	25	CY	
	Loading Cost	Front end loader 3 CY	02315 424 1300	1.43	/CY													25	CY	36
	Transportation Cost	12 CY (16 Ton) Dump Truck 1/2 mi. rnd. trip	02315 490 0320	3.49	/CY													25	CY	87
	Disposal Costs	On site disposal	02220 240 5550	7.75	/CY													25	CY	194
	Subtotal																			446
	Total																			12475

Ref.	Description	Materials	Means Reference Number	Unit Cost	Unit	Length	Width	Height	Diameter	Area	Volume	Weight	Density	Time	Number	Unit	Swell Factor	Quantity	Unit	Cost
	River Pump 30																			
	Structure's Demolition Cost	Steel Bld. Large	02220 110 0012	0.26	/CF	8	8	8								FT		512	CF	133
	Structure's Vol. Demolished																			
	Rubble's Weight (exclude steel)																			
	Truck's Capacity																			
	Haulage																			
	Transportation Cost Non Steel Truck																			
	Transportation Cost Non Steel Drive																			
	Disposal Cost Non Steel																			
	Steel's Weight																			
	Truck's Capacity																			
	Haulage																			
	Transportation Cost Steel Truck																			
	Transportation Cost Steel Truck Drive																			
	Disposal Cost Steel																			
	Subtotal																			133
	Equipment 's Disposal Cost																			
	Dismantling Cost																			
	Equipment 's Vol. Demolished																			
	Loading Costs																			
	Transport Costs																			
	Disposal Costs																			
	Subtotal																			
	Pad's Demolition																			
	Demolition Cost	Concrete demolition	ConcreteDemo1	6.81	/CY	8	8	1								FT		2	CY	14
	Pad's Vol. Demolished																1.3	3	CY	
	Loading Cost	Front end loader 3 CY	02315 424 1300	1.43	/CY													3	CY	4
	Transportation Cost	12 CY (16 Ton) Dump Truck 1/2 mi. md. trip	02315 490 0320	3.49	/CY													3	CY	10
	Disposal Costs	On site disposal	02220 240 5550	7.76	/CY													3	CY	23
	Subtotal																			51
	Concrete Demolition																			
	Demolition Cost																			
	Concrete's Vol. Demolished																			
	Loading Cost																			
	Transportation Cost																			
	Disposal Costs																			
	Subtotal																			
	Concrete Demolition																			
	Demolition Cost																			
	Concrete's Vol. Demolished																			
	Loading Cost																			
	Transportation Cost																			
	Disposal Costs																			
	Subtotal																			
	Total																			184

Ref.	Description	Materials	Means Reference Number	Unit Cost	Unit	Length	Width	Height	Diameter	Area	Volume	Weight	Density	Time	Number	Unit	Swell Factor	Quantity	Unit	Cost
	Guard Rails 31																			
	Structure's Demolition Cost	Guiderail remove	02220 240 0800	12.2	LF	4950										LF		4950	LF	60390
	Structure's Vol. Demolished																			
	Rubble's Weight (exclude steel)																			
	Truck's Capacity																			
	Haulage																			
	Transportation Cost Non Steel Truck																			
	Transportation Cost Non Steel Drive																			
	Disposal Cost Non Steel																			
	Steel's Weight																			
	Truck's Capacity																			
	Haulage																			
	Transportation Cost Steel Truck																			
	Transportation Cost Steel Truck Drive																			
	Disposal Cost Steel																			
	Subtotal																			60390
	Equipment 's Disposal Cost																			
	Dismantling Cost																			
	Equipment 's Vol. Demolished																			
	Loading Costs																			
	Transport Costs																			
	Disposal Costs																			
	Subtotal																			
	Concrete Demolition																			
	Demolition Cost																			
	Concrete's Vol. Demolished																			
	Loading Cost																			
	Transportation Cost																			
	Disposal Costs																			
	Subtotal																			
	Concrete Demolition																			
	Demolition Cost																			
	Concrete's Vol. Demolished																			
	Loading Cost																			
	Transportation Cost																			
	Disposal Costs																			
	Subtotal																			
	Concrete Demolition																			
	Demolition Cost																			
	Concrete's Vol. Demolished																			
	Loading Cost																			
	Transportation Cost																			
	Disposal Costs																			
	Subtotal																			
	Total																			60390

Ref.	Description	Materials	Means Reference Number	Unit Cost	Unit	Length	Width	Height	Diameter	Area	Volume	Weight	Density	Time	Number	Unit	Swell Factor	Quantity	Unit	Cost
	Culverts 32																			
	Excavate 12" diameter culvert	Excavation Bulk Bank 2 CY (322BL)	02315 424 0260	1.74	/CY	300	2	2								FT		44	CY	77
	Backfill 12" diameter culvert	Backfill Trench Minimal Haul 2 1/4 CY	02315 610 3080	1.58	/CY	300	2	2								FT		44	CY	70
	Excavate 18" diameter culvert	Excavation Bulk Bank 2 CY (322BL)	02315 424 0260	1.74	/CY	810	2	3								FT		180	CY	313
	Backfill 18" diameter culvert	Backfill Trench Minimal Haul 2 1/4 CY	02315 610 3080	1.58	/CY	810	2	3								FT		180	CY	284
	Excavate 24" diameter culvert	Excavation Bulk Bank 2 CY (322BL)	02315 424 0260	1.74	/CY	750	2	4								FT		222	CY	386
	Backfill 24" diameter culvert	Backfill Trench Minimal Haul 2 1/4 CY	02315 610 3080	1.58	/CY	750	2	4								FT		222	CY	351
	Subtotal																			[illegible]
	Equipment 's Disposal Cost																			
	Dismantling Cost																			
	Equipment 's Vol. Demolished																			
	Loading Costs																			
	Transport Costs																			
	Disposal Costs																			
	Subtotal																			
	Concrete Demolition																			
	Demolition Cost																			
	Concrete's Vol. Demolished																			
	Loading Cost																			
	Transportation Cost																			
	Disposal Costs																			
	Subtotal																			
	Concrete Demolition																			
	Demolition Cost																			
	Concrete's Vol. Demolished																			
	Loading Cost																			
	Transportation Cost																			
	Disposal Costs																			
	Subtotal																			
	Concrete Demolition																			
	Demolition Cost																			
	Concrete's Vol. Demolished																			
	Loading Cost																			
	Transportation Cost																			
	Disposal Costs																			
	Subtotal																			
	Total																			[illegible]

Ref.	Description	Materials	Means Reference Number	Unit Cost	Unit	Length	Width	Height	Diameter	Area	Volume	Weight	Density	Time	Number	Unit	Swell Factor	Quantity	Unit	Cost
	Stacking Tube 33																			
	36" Conveyor																			
	Structure's Demolition Cost	Steel Bld. Large	02220 110 0012	0.26	/CF	100	45	10								FT		45000	CF	11700
	Structure's Vol. Demolished																0.1	167	CY	
	Rubble's Weight (exclude steel)																			
	Truck's Capacity																			
	Haulage																			
	Transportation Cost Non Steel Truck																			
	Transportation Cost Non Steel Drive																			
	Disposal Cost Non Steel	ECDC	ECDC	35	/TON											CY		167	CY	5845
	Steel's Weight																			
	Truck's Capacity																			
	Haulage																			
	Transportation Cost Steel Truck																			
	Transportation Cost Steel Truck Drive																			
	Disposal Cost Steel																			
	Subtotal																			17545
	Steel Stacking Tube																			
	Structure's Demolition Cost	Steel Bld. Large	02220 110 0012	0.26	/CF			80.3	10						2	FT		12613	CF	3279
	Structure's Vol. Demolished																0.1	47	CY	
	Rubble's Weight (exclude steel)																			
	Truck's Capacity																			
	Haulage																			
	Transportation Cost Non Steel Truck																			
	Transportation Cost Non Steel Drive																			
	Disposal Cost Non Steel	ECDC	ECDC	35	/TON											CY		47	CY	1645
	Steel's Weight																			
	Truck's Capacity																			
	Haulage																			
	Transportation Cost Steel Truck																			
	Transportation Cost Steel Truck Drive																			
	Disposal Cost Steel																			
	Subtotal																			4924
	Concrete Demolition																			
	Demolition Cost	Concrete demolition	ConcreteDemo1	6.81	/CY						46					CY		46	CY	313
	Concrete's Vol. Demolished																1.3	60	CY	
	Loading Cost	Front end loader 3 CY	02315 424 1300	1.43	/CY													60	CY	86
	Transportation Cost	12 CY (16 Ton) Dump Truck 1/2 mi. md. trip	02315 490 0320	3.49	/CY													60	CY	209
	Disposal Costs	On site disposal	02220 240 5550	7.75	/CY													60	CY	465
	Subtotal																			1073
	Concrete Demolition																			
	Demolition Cost																			
	Concrete's Vol. Demolished																			
	Loading Cost																			
	Transportation Cost																			
	Disposal Costs																			
	Subtotal																			
	Total																			23542

Ref.	Description	Materials	Means Reference Number	Unit Cost	Unit	Length	Width	Height	Diameter	Area	Volume	Weight	Density	Time	Number	Unit	Swell Factor	Quantity	Unit	Cost
	Coal Sampler Addition 34																			
	Structure's Demolition Cost	Steel Bld. Large	02220 110 0012	0.26	/CF	27	26	16								FT		11232	CF	2920
	Structure's Vol. Demolished																0.1	42	CY	
	Rubble's Weight (exclude steel)																			
	Truck's Capacity																			
	Haulage																			
	Transportation Cost Non Steel Truck																			
	Transportation Cost Non Steel Drive																			
	Disposal Cost Non Steel	ECDC	ECDC	35	/TON								100			lb/cf		57	ton	1995
	Steel's Weight																			
	Truck's Capacity																			
	Haulage																			
	Transportation Cost Steel Truck																			
	Transportation Cost Steel Truck Drive																			
	Disposal Cost Steel																			
	Subtotal																			4915
	Equipment 's Disposal Cost																			
	Dismantling Cost																			
	Equipment 's Vol. Demolished																			
	Loading Costs																			
	Transport Costs																			
	Disposal Costs																			
	Subtotal																			
	Concrete Demolition																			
	Demolition Cost	Concrete demolition	ConcreteDemo1	6.81	/CY	27	26	0.75								FT		19	CY	129
	Concrete's Vol. Demolished																1.3	25	CY	
	Loading Cost	Front end loader 3 CY	02315 424 1300	1.43	/CY													25	CY	36
	Transportation Cost	12 CY (16 Ton) Dump Truck 1/2 mi. md. trip	02315 490 0320	3.49	/CY													25	CY	87
	Disposal Costs	On site disposal	02220 240 5550	7.75	/CY													25	CY	194
	Subtotal																			446
	Concrete Demolition																			
	Demolition Cost																			
	Concrete's Vol. Demolished																			
	Loading Cost																			
	Transportation Cost																			
	Disposal Costs																			
	Subtotal																			
	Concrete Demolition																			
	Demolition Cost																			
	Concrete's Vol. Demolished																			
	Loading Cost																			
	Transportation Cost																			
	Disposal Costs																			
	Subtotal																			
	Total																			5361

Ref.	Description	Materials	Means Reference Number	Unit Cost	Unit	Length	Width	Height	Diameter	Area	Volume	Weight	Density	Time	Number	Unit	Swell Factor	Quantity	Unit	Cost
	Conveyor Transfer 35																			
	Structure's Demolition Cost	Steel Bld. Large	02220 110 0012	0.26	/CF	1538	7	4								FT		43064	CF	11197
	Structure's Vol. Demolished																0.05	80	CY	
	Rubble's Weight (exclude steel)																			
	Truck's Capacity																			
	Haulage																			
	Transportation Cost Non Steel Truck																			
	Transportation Cost Non Steel Drive																			
	Disposal Cost Non Steel	ECDC	ECDC	35	/TON								100			lb/cf		108	ton	3780
	Steel's Weight																			
	Truck's Capacity																			
	Haulage																			
	Transportation Cost Steel Truck																			
	Transportation Cost Steel Truck Drive																			
	Disposal Cost Steel																			
	Subtotal																			14977
	Excavate 18" diameter culvert	Excavation Bulk Bank 2 CY (322BL)	02315 424 0260	1.74	/CY	800	2	3								FT		178	CY	310
	Backfill 18" diameter culvert	Backfill Trench Minimal Haul 2 1/4 CY	02315 610 3080	1.58	/CY	800	2	3								FT		178	CY	281
	Subtotal																			591
	Concrete Demolition																			
	Demolition Cost	Concrete demolition	ConcreteDemo1	6.81	/CY	8	2	2							22	FT		26	CY	177
	Concrete's Vol. Demolished																1.3	34	CY	
	Loading Cost	Front end loader 3 CY	02315 424 1300	1.43	/CY													34	CY	49
	Transportation Cost	12 CY (16 Ton) Dump Truck 1/2 mi. md. trip	02315 490 0320	3.49	/CY													34	CY	119
	Disposal Costs	On site disposal	02220 240 5550	7.75	/CY													34	CY	264
	Subtotal																			609
	Concrete Demolition																			
	Demolition Cost																			
	Concrete's Vol. Demolished																			
	Loading Cost																			
	Transportation Cost																			
	Disposal Costs																			
	Subtotal																			
	Concrete Demolition																			
	Demolition Cost																			
	Concrete's Vol. Demolished																			
	Loading Cost																			
	Transportation Cost																			
	Disposal Costs																			
	Subtotal																			
	Total																			16177

Ref.	Description	Materials	Means Reference Number	Unit Cost	Unit	Length	Width	Height	Diameter	Area	Volume	Weight	Density	Time	Number	Unit	Swell Factor	Quantity	Unit	Cost
	New Shop Oil Storage Bld 36																			
	Structure's Demolition Cost	Steel Bld. Large	02220 110 0012	0.26	/CF	40	80	18								FT		57600	CF	14976
	Structure's Vol. Demolished																0.01	21	CY	
	Rubble's Weight (exclude steel)																			
	Truck's Capacity																			
	Haulage																			
	Transportation Cost Non Steel Truck																			
	Transportation Cost Non Steel Drive																			
	Disposal Cost Non Steel	ECDC	ECDC	35	/TON								100			lb/cf		28	ton	980
	Steel's Weight																			
	Truck's Capacity																			
	Haulage																			
	Transportation Cost Steel Truck																			
	Transportation Cost Steel Truck Drive																			
	Disposal Cost Steel																			
	Subtotal																			15956
	Equipment 's Disposal Cost																			
	Dismantling Cost																			
	Equipment 's Vol. Demolished																			
	Loading Costs																			
	Transport Costs																			
	Disposal Costs																			
	Subtotal																			0
	Concrete Demolition																			
	Demolition Cost	Concrete demolition	ConcreteDemo1	6.81	/CY						126					CY		126	CY	858
	Concrete's Vol. Demolished																1.3	164	CY	
	Loading Cost	Front end loader 3 CY	02315 424 1300	1.43	/CY													164	CY	235
	Transportation Cost	12 CY (16 Ton) Dump Truck 1/2 mi. rnd. trip	02315 490 0320	3.49	/CY													164	CY	572
	Disposal Costs	On site disposal	02220 240 5550	7.75	/CY													164	CY	1271
	Subtotal																			2936
	Concrete Demolition																			
	Demolition Cost																			
	Concrete's Vol. Demolished																			
	Loading Cost																			
	Transportation Cost																			
	Disposal Costs																			
	Subtotal																			
	Concrete Demolition																			
	Demolition Cost																			
	Concrete's Vol. Demolished																			
	Loading Cost																			
	Transportation Cost																			
	Disposal Costs																			
	Subtotal																			
	Total																			18892

Ref.	Description	Materials	Means Reference Number	Unit Cost	Unit	Length	Width	Height	Diameter	Area	Volume	Weight	Density	Time	Number	Unit	Swell Factor	Quantity	Unit	Cost
	Plant Expansion 37																			
	Plant Feed Conveyor																			
	Structure's Demolition Cost	Steel Bld. Large	02220 110 0012	0.26	/CF	233	4	4								FT		3728	CF	969
	Structure's Vol. Demolished																0.01	1	CY	
	Fine Raow Coal Conveyor																			
	Structure's Demolition Cost	Steel Bld. Large	02220 110 0012	0.26	/CF	200	4	4								FT		3200	CF	832
	Structure's Vol. Demolished																0.01	1	CY	
	Refuse Conveyor																			
	Structure's Demolition Cost	Steel Bld. Large	02220 110 0012	0.26	/CF	100	4	4								FT		1600	CF	416
	Structure's Vol. Demolished																0.01	1	CY	
	Stacking Conveyor																			
	Structure's Demolition Cost	Steel Bld. Large	02220 110 0012	0.26	/CF	100	4	4								FT		1600	CF	416
	Structure's Vol. Demolished																0.01	1	CY	
	Subtotal																			[illegible]
	Plant Feed Conveyor																			
	Concrete Demolition																			
	Demolition Cost	Concrete demolition	ConcreteDemo1	6.81	/CY						42.6					CY		42.6	CY	290
	Concrete's Vol. Demolished																1.3	55	CY	
	Loading Cost	Front end loader 3 CY	02315 424 1300	1.43	/CY													55	CY	79
	Transportation Cost	12 CY (16 Ton) Dump Truck 1/2 mi. md. trip	02315 490 0320	3.49	/CY													55	CY	192
	Disposal Costs	On site disposal	02220 240 5550	7.75	/CY													55	CY	426
	Subtotal																			[illegible]
	Fine Raow Coal Conveyor																			
	Concrete Demolition																			
	Demolition Cost	Concrete demolition	ConcreteDemo1	6.81	/CY						33.1					CY		33.1	CY	225
	Concrete's Vol. Demolished																1.3	43	CY	
	Loading Cost	Front end loader 3 CY	02315 424 1300	1.43	/CY													43	CY	61
	Transportation Cost	12 CY (16 Ton) Dump Truck 1/2 mi. md. trip	02315 490 0320	3.49	/CY													43	CY	150
	Disposal Costs	On site disposal	02220 240 5550	7.75	/CY													43	CY	333
	Subtotal																			769
	Refuse Conveyor																			
	Concrete Demolition																			
	Demolition Cost	Concrete demolition	ConcreteDemo1	6.81	/CY						15.3					CY		15.3	CY	104
	Concrete's Vol. Demolished																1.3	20	CY	
	Loading Cost	Front end loader 3 CY	02315 424 1300	1.43	/CY													20	CY	29
	Transportation Cost	12 CY (16 Ton) Dump Truck 1/2 mi. md. trip	02315 490 0320	3.49	/CY													20	CY	70
	Disposal Costs	On site disposal	02220 240 5550	7.75	/CY													20	CY	155
	Subtotal																			[illegible]
	Stacking Conveyor																			
	Concrete Demolition																			
	Demolition Cost	Concrete demolition	ConcreteDemo1	6.81	/CY						85.1					CY		85.1	CY	580
	Concrete's Vol. Demolished																1.3	111	CY	
	Loading Cost	Front end loader 3 CY	02315 424 1300	1.43	/CY													111	CY	159
	Transportation Cost	12 CY (16 Ton) Dump Truck 1/2 mi. md. trip	02315 490 0320	3.49	/CY													111	CY	387
	Disposal Costs	On site disposal	02220 240 5550	7.75	/CY													111	CY	860
	Subtotal																			[illegible]
	Total																			8733

	Equipment Cost	Hourly Operating Costs	Equipment Overhead	Operator's Hourly Wage Rate	Hourly Cost	Number of Men or Eq.	Total Eq. & Lab. Costs	Units	Quantity	Units	Production Rate	Units	Equip. + Labor Time/Dis.	Units	Cost
Cleanup Coal Piles															6899
Recontouring															237267
Topsoil															99137
Ripping															27192
Subtotal															370495

	Equipment Cost	Hourly Operating Costs	Equipment Overhead	Operator's Hourly Wage Rate	Hourly Cost	Number of Men or Eq.	Total Eq. & Lab. Costs	Units	Quantity	Units	Production Rate	Units	Equip. + Labor Time/Dis.	Units	Cost
Savage Coal Terminal Cleanup Coal Piles															
D9R Semi-U EROPS (9-54) (2H2005)	18485	80.3	0.1	55.4	259.26	1	259.26	HR	1500	CY	187	CY/HR	8	HR	2074
988G EROPS (9-37) (2nd2005) 2005	9010	40.05	0.1	55.4	155.77	1	155.77	HR	1500	CY	187	CY/HR	8	HR	1246
CLAB					42.65	1	42.65	HR					16	HR	682
Foreman Average, Outside					59.9	1	59.9	HR					16	HR	958
5,000 gal H2O truck Diesel (20-17) (2nd2005)	4990	31.95	0.1	43.3	109.63	1	109.63	HR					16	HR	1754
Pickup Truck Crew 4x4 1 ton (20-17) (2nd2005)	900	5.4	0.1	0	11.57	1	11.57	HR					16	HR	185
Subtotal															8899

	Equipment Cost	Hourly Operating Costs	Equipment Overhead	Operator's Hourly Wage Rate	Hourly Cost	Number of Men or Eq.	Total Eq. & Lab. Costs	Units	Quantity	Units	Production Rate	Units	Equip. + Labor Time/Dis.	Units	Cost
Svage Coal Terminal Recontouring															
D9R Semi-U EROPS (9-54) (2H2005)	18485	80.3	0.1	55.4	259.26	1	259.26	HR					639	HR	165667
CLAB					42.65	1	42.65	HR					320	HR	13648
Foreman Average, Outside					59.9	1	59.9	HR					320	HR	19168
5,000 gal H2O truck Diesel (20-17) (2nd2005)	4990	31.95	0.1	43.3	109.63	1	109.63	HR					320	HR	35082
Pickup Truck Crew 4x4 1 ton (20-17) (2nd2005)	900	5.4	0.1	0	11.57	1	11.57	HR					320	HR	3702
Subtotal															237267

	Equipment Cost	Hourly Operating Costs	Equipment Overhead	Operator's Hourly Wage Rate	Hourly Cost	Number of Men or Eq.	Total Eq. & Lab. Costs	Units	Quantity	Units	Production Rate	Units	Equip. + Labor Time/Dis.	Units	Cost
Savage Coal Terminal Topsoil															
D8R Series II (9-54) (2nd2005)	14705	59.75	0.1	55.4	213.03	1	213.03	HR					102	HR	21729
627G EROPS (9-51) (2nd2005)	16560	98.8	0.1	55.4	267.58	1	267.58	HR					204	HR	54586
CLAB					42.65	1	42.65	HR					102	HR	4350
Foreman Average, Outside					59.9	1	59.9	HR					102	HR	6110
5,000 gal H2O truck Diesel (20-17) (2nd2005)	4990	31.95	0.1	43.3	109.63	1	109.63	HR					102	HR	11182
Pickup Truck Crew 4x4 1 ton (20-17) (2nd2005)	900	5.4	0.1	0	11.57	1	11.57	HR					102	HR	1180
Subtotal															98137

	Equipment Cost	Hourly Operating Costs	Equipment Overhead	Operator's Hourly Wage Rate	Hourly Cost	Number of Men or Eq.	Total Eq. & Lab. Costs	Units	Quantity	Units	Production Rate	Units	Equip. + Labor Time/Dis.	Units	Cost
Ripping															
D7R Series II (9-54) (2nd2005)	11230	46.65	0.1	55.4	176.9	1	176.9	HR					139	HR	24589
Multi-Shank Ripper 190-259 P (9-61) (2nd2005)	1915	6.15	0.1		18.73	1	18.73	HR					139	HR	2603
Subtotal															27192

Ref.	Description	Materials	Means Reference Number	Unit Cost	Unit	Length	Width	Height	Diameter	Area	Volume	Weight	Density	Time	Number	Unit	Swell Factor	Quantity	Unit	Cost
	Vegetation																			
	General Area																			
	Seeding Equipment and Labor	Tractor Spreader (equip. & labor) B-66	Reveg004	11.95	/MSF					132.5						AC		5772	MSF	68975
	Seeding Material	General Seed Mix	Savage07221	151.15	/AC					132.5						AC		132.5	AC	20027
	Mulch	Hay - Large Power - Crew	Crew	1023	/Day										11	Days				11253
		Hay - ~1 ton/ac.		61.6	/Ton										132.5	Ton				8162
	Riprarian																			
	Seeding Equipment and Labor	Hydro Spreader (equip. & labor) B-81 80MS	Reveg002	19.8	/MSF					5.28						AC		230	MSF	4554
	Seeding Material	Riparian Seed Mix	Savage07222	49.5	/AC					5.28						AC		5	AC	248
	Area									5.28										
										5.28						AC				
		Bare root seedlings, 11" to 16" med. soil	02915 400 0562	1.31	Ea										4963	EA		4963	EA	6502
	Subtotal																			[illegible]
	Revegetation																			
	25% Revegetation Rate																			29930
	Subtotal																			29930
	Subtotal																			
	Subtotal																			
	Total																			149651

APPENDIX A

Bond Calculation Worksheets

August 2006

WORKSHEET 3
MATERIAL HANDLING PLAN SUMMARY

Earthmoving Activity	Volume (LCY)	Origin	Destination	Haul Distance (ft)	Grade* (%)	Equipment To Be Used
1- Site Grading	119,479		Backfill/Contour	300 Avg.	+5	D9R-9U Dozer (2)
2- Topsoil	67,592	Stockpile	Disturbed Area	2000 Avg.	0 Avg.	627 F Scraper (2) w/D8N Push Tractor
3- Ripping/Roughening	132.5 ac.		Disturbed Area			D7R-SU Dozer w/3 Shank Ripper
4- Clean-Up Coal Piles	3000	Coal Piles	Ship	300 Avg.	+5 Avg.	D9R-9U Dozer 988 F - Loader

*** Record grade resistance (% grade) here.**

WORKSHEET 4B
EARTHWORK QUANTITY

Site Grading

Earthwork Volume -119,479 LCY (See Worksheet 4A)

Estimate all moved by dozers.

Topsoil Repalcement

Topsoil Volume = 67,592 LCY
(To be moved by scraper)

Ripping

Ripping depth for 132.5 ac. disturbed area = 1.5 ft.

Volume = (132.5 ac x 43,560 SF/ac x 1.5 ft)/27 CF/CY = 320,650 BCY

Data Source(s):

Mine Plan

WORKSHEET 5A
PRODUCTIVITY AND HOURS REQUIRED FOR DOZER USE

Earthmoving Activity: (119,479 CY)

Recontour and rough grade disturbed areas.

Characterization of Dozer Used (type, size, etc.):

D9R-9U Dozer

Description of Dozer Use (origin, destination, grade, haul distance, material, etc.):

300 LF push distance @ +5% effective grade.

Productivity Calculations:

Operating Adjustment Factor = 0.75 (operator factor) x 0.80 (material factor) x 0.83 (efficiency factor) x 0.90 (grade factor)

x 0.87 (weight correction factor) x 1.0 (production method/blade factor) x 1.0 (visibility factor) x 1.0 (elevation factor) = 0.39

Net Hourly Production = 480 (normal hourly production) LCY/hr x 0.39 (operating adjustment factor) = 187 LCY/hr

Hours Required = 119,479 (volume to be moved) LCY ÷ 187 (net hourly production) LCY/hr = 639 hr

Note: Minimum of 2 dozers will be used.

Data Source(s):

Caterpillar Performance Handbook, Edition 28.

WORKSHEET 5B
PRODUCTIVITY AND HOURS REQUIRED FOR DOZER USE

Earthmoving Activity:

Push tractor to assist loading scrapers.

Characterization of Dozer Used (type, size, etc.):

D8N dozer with a "SU" Blade.

Description of Dozer Use (origin, destination, grade, haul distance, material, etc.):

Scrapers loaded with Back-track Loading Method.

Productivity Calculations:

Operating Adjustment Factor = _____ (operator factor) x _____ (material factor) x _____ (efficiency factor) x _____ (grade factor)

x _____ (weight correction factor) x _____ (production method/blade factor) x _____ (visibility factor) x _____ (elevation factor) = _____

Net Hourly Production = _____ (normal hourly production) LCY/hr x _____ (operating adjustment factor) = _____ LCY/hr

Hours Required = _____ (volume to be moved) LCY + _____ (net hourly production) LCY/hr = * 102 hr

* See Worksheet 11B-1.

Data Source(s):

Caterpillar Performance Handbook, Edition 28.

WORKSHEET 5C
PRODUCTIVITY AND HOURS REQUIRED FOR DOZER USE

Earthmoving Activity: (1,500 CY)

Clean-Up of Coal Storage Areas.

Characterization of Dozer Used (type, size, etc.):

D9R-9U Dozer

Description of Dozer Use (origin, destination, grade, haul distance, material, etc.):

300 LF push distance @ +5% effective grade.

Productivity Calculations:

Operating Adjustment Factor = 0.75 (operator factor) x 0.80 (material factor) x 0.83 (efficiency factor) x 0.90 (grade factor)

x 0.87 (weight correction factor) x 1.0 (production method/blade factor) x 1.0 (visibility factor) x 1.0 (elevation factor) = 0.39

Net Hourly Production = 480 (normal hourly production) LCY/hr x 0.39 (operating adjustment factor) = 187 LCY/hr

Hours Required = 1,500 (volume to be moved) LCY ÷ 187 (net hourly production) LCY/hr = 8 hr

Data Source(s):

Caterpillar Performance Handbook, Edition 28.

WORKSHEET 7
PRODUCTIVITY AND HOURS REQUIRED FOR RIPPER-EQUIPPED DOZER USE

Ripping Activity: Unit will be used for ripping and roughening the site.

The activity will involve 132.5 acres.

Characterization of Dozer and Ripper Use:

D7R w/SU blade and 3-shank adjustable ripper.

Description of Ripping (ripping depth, cut spacing, cut length, and material to be ripped):

Ripping depth = 1.5 ft.
Ripping width = 9.75 ft.

Productivity Calculation:

Cycle Time = (1,000 ft ÷ 88 ft/min) + 0.3 min = 11.66 min/pass
(cut length; [speed]; fixed turn time*)

Passes/Hour = 60 min/hr + 11.66 min/pass x .83 = 4.27 passes/hr
(cycle time; efficiency factor)

Volume Cut/Pass = (1.5 ft x 9.75 ft x 1,000 ft) ÷ 27 ft^3/yd^3
(tool penetration; cut spacing; cut length)

= 541.7 BCY/pass

Hourly Production = 541.7 BCY/pass x 4.27 passes/hr = 2,313.1 BCY/hr

Hours Required = 320,650 BCY ÷ 2,313.1 BCY/hr = 138.62 hr
(bank volume to be ripped; hourly production)

*** Fixed turn time depends upon dozer used. 0.25 min/turn is normal.**

**** Remember to use the swell factor to convert from bank cubic yards to loose cubic yards when applying these data to Worksheet 5. Calculate separate dozer hauling of ripped material for each lift on that worksheet.**

Data Source(s):

Caterpillar Performance Handbook, Edition 28.

WORKSHEET 8
PRODUCTIVITY AND HOURS REQUIRED FOR LOADER USE

Earthmoving Activity: (1,500 CY)

Clean-up of Coal Storage Areas.

Characterization of Loader Use (type, size, etc.):

988 F Front End Loader

Description of Loader Use (origin, destination, grade, haul distance, etc.):

300 LF haul distance @ +5% effective grade.
Working with D9N Dozer.

Productivity Calculations:

Cycle Time = _____ **min +** _____ **min +** _____ **min =** _____ **min**
haul time (loaded) **return time (empty)** **basic cycle time**

Net Bucket Capacity = _____ **LCY x** _____ **=** _____ **LCY**
heaped bucket capacity **bucket fill factor ***

Hourly Production = _____ **LCY ÷** _____ **min x** _____ **x 60 min/hr =** * 187 **LCY/hr**
net bucket capacity **cycle time** **efficiency factor**

Hours Required = 1,500 **LCY ÷** 187 **LCY/hr =** 8 **hr**

*** Productivity assumed same as dozer, since both are working together.**

Data Source(s):

See Worksheet 5C.

WORKSHEET 11B -1
PRODUCTIVITY OF DOZER PUSH-LOADED SCRAPER USE

Earthmoving Activity: (67,592 CY)

Haul and Spread Topsoil.

Characterization of Scraper Used (type, capacity, etc.):

Cat 627 F Non-push pull 14 CY(struck) + 20 CY (heaped) = 17 CY Average Capacity.

Description of Scraper Use (origin, destination, grade, haul distance, capacity, etc.):

1000' avg. haul @ 0% effective grade; 1000' return @ +5% effective grade.

List Pusher Tractor(s) Used:

D8N dozer.

Describe Push Tractor Loading Method (see figure on next page):

Back-track loading method with 1 push tractor.

Scraper Productivity Calculations:

Cycle Time = 0.5 **min +** 0.50 **min +** 0.6 **min +** 0.70 **min =** 2.30 **min**
(load time; loaded trip time; maneuver and spread time; return trip time)

Hourly Production = 17 **LCY x 60 min/hr +** 2.30 **min x** .75 **=** 332.6 **LCY/hr**
(capacity *; cycle time; efficiency factor)

Hours Required = 67,592 **LCY ÷** 332.6 **LCY/hr =** 203 **hr**
(volume to be handled; hourly production)

*** Use the average of the struck and heaped capacities.**

Push Tractor Productivity Calculations:

Pusher Cycle Time = 0.5 **min x** 1.5 **=** 0.75 **min**
(scraper load time; pusher factor)

Scrapers/Pusher = 2.30 **min ÷** 0.75 **min =** 1.7 **scrapers**
(scraper cycle time; pusher cycle time; (Use 2))

Pusher Hours Required = 203 **hr ÷** 2 **=** 102 **hr**
(scraper hours; scraper per pusher; (round up))

Data Source(s):

Caterpillar Performance Handbook, Edition 28.

WORKSHEET 13
SUMMARY CALCULATION OF EARTHMOVING COSTS

Equipment *	Ownership & Operation Cost Total ($/hr)	Labor Cost ($/hr)	Total Hours Required **	Total Cost *** ($)
627 G Scraper	267.58	-	204	54,586.00
D8N-SU Push Tractor	213.03	-	102	21,729.00
(1) D7R-SU Dozer/Ripper	195.63	-	139	27,193.00
D9R-9U Dozer	259.26	-	647	167,741.00
988 G Loader	155.77	-	8	1,246.00
5000 G. Water Truck	109.63	-	438	48,018.00
4 x 4 Crew Pickup	11.57	-	438	5,067.00
CLAB	-	42.65	438	18,680.00
Foreman	-	59.90	438	26,236.00
(1) Used for Ground Prep Only - Included in Revegetation Cost.				
			Grand Total	$370,496.00

* **Include all necessary attachments and accessories for each item of equipment. Also, add support equipment such as water wagons and graders to match total project time as appropriate.**

** **Account for multiple units in truck and/or scraper teams.**

*** **To compute Total Cost: Add ownership & Operation Cost and Labor Cost columns then multiply by Total Hours Required column.**

Data Source(s):

Means Heavy Construction Cost Data, 12th Annual Edition.

EQUIPMENT	COST/HR	QUANTITY	PRODUCTIVITY	HOURS	COST
CLEANUP					
D9R-9U	259.26	1500 CY	187 CY/HR	8	$2,074.08
988 G	155.77	1500 CY	187 CY/HR	8	$1,246.16
CLAB	42.65			16	$682.40
Forman	59.94			16	$959.04
5000 gal water truck	109.63			16	$1,754.08
Pick Up	11.57			16	$185.12
Total					$6,900.88
EARTHMOVING - REGRADE					
D9R-9U	259.26	119,479 CY	187 CY/HR	639	$165,667.14
CLAB	42.65			320	$13,648.00
Foreman	59.90			320	$19,168.00
5000 gal water truck	109.63			320	$35,081.60
Pickup	11.57			320	$3,702.40
Total					$237,267.14
TOPSOIL					
D8N	213.03	67,592 CY		102	$21,729.06
627 G	267.58			204	$54,586.32
CLAB	42.65			102	$4,350.30
Foreman	59.90			102	$6,109.80
5000 gal water truck	109.63			102	$11,182.26
Pickup	11.57			102	$1,180.14
Total					$99,137.88
REVEGETATION					
Ground Prep D7-R w/ Ripper	195.63	132.5 AC		139	$27,192.57
Seeding Tractor/Spreader	11.95	5772 MSF			$68,975.40
Mulch Power Mulcher/Crew	1023/Day	5772 MSF	530 MSF/DAY	11 DAYS	$11,253.00
Seed Mix Riparian	49.5/AC	5.28 AC			$261.36
Hydro Spreader/	19.8/MSF	230 MSF			$4,554.00
Bare Root Seedlings	1.31/Ea	4963			$6,501.53
Seed Mix General	151.15/AC	132.5 AC			$20,027.38
Hay Mulch	61.60/TON	132.5 TON	1 TON/ACRE		$8,162.00
Sub Total					$146,927.24
+25% Revegetation					$36,731.81
Total					$183,659.04

FIGURE 7-1
SAVAGE COAL TERMINAL
MONITORING WELL DESIGN

(NOT TO SCALE)

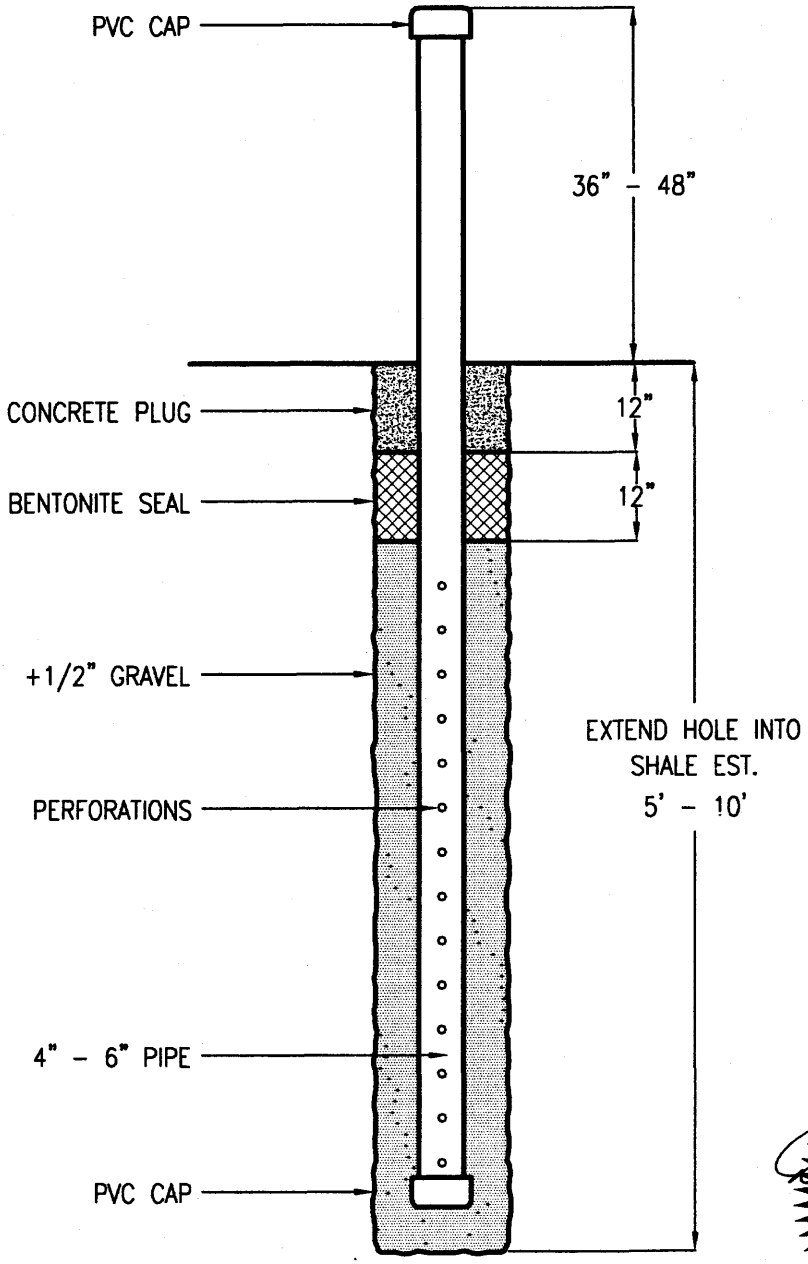

TYPICAL GROUND WATER MONITORING WELL

7.1.5 Mitigation and Control Plan (continued)

activities, the collector sump at the northeast corner of the property will be filled in, and the french drain line will be severed approximately 50 feet from the sump and plugged off with concrete. The smaller french drain line located south of the railroad loop will also be severed at the lower end and plugged off with concrete to render it non-discharging. While water table conditions on the site are expected to rise following removal of the sump, saturation of reclaimed surface or coal refuse is not expected to occur. The remaining portion of the french drain will continue to favor lowering of the water table and diversion of shallow groundwater around the site. Saturated conditions and seepage expected to occur in the vivcinity of the sump and downslope of the french drain. The coal refuse. Which is at a higher elevation, should remain above the water table.

7.1.6 Groundwater Monitoring Plan

Monitoring of ground water wells was discontinued in 1998; however, since the wash plant is scheduled to restart in 2006, and based on discussions with the Division, it is proposed to reinstate ground water monitoring at 2 sites on the eastern perimeter of the property.

Two ground water monitoring wells will be drilled at the locations shown on Plate 7-1. The wells will be drilled to the level of the unweathered shale and installed per Figure 7-1. These wells are scheduled to be installed within 90 days following approval. In the interim, ground water monitoring will be started by taking grab samples from the French Drain and Pond 5 on a monthly basis. Both of these sites contain ground water and are located on the eastern boundary of the site, where the natural gradient of the unweathered shale causes groundwater from the site to collect.

Once the monitoring wells are installed they will be monitored on a quarterly basis for a minimum of 2 years. After 2 years, if no unusual variations or impacts are noted, the monitoring will be reduced to bi-annual during the 2nd and 4th quarters of each year.

Once the wells are completed, and monitoring starts the monthly monitoring of the French Drain will be replaced by the bi-annual monitoring as it was previously. The monthly monitoring of Pond 5 will be eliminated at this time.

The ground water wells will be designated S-1-GW for the NE well nearest the pumphouse, and S-2-GW for the well south of Pond 5 (See Plate 7-1).

A grab sample and flow (or depth from surface) measurement will be taken bi-annually from the French Drain. Samples will be taken during the 2nd and 4th Quarter of each year. Quarterly grab samples will be taken from the monitoring wells. Samples will be analyzed per Figure 7-15.

Field measurement of pH, specific conductivity and temperature will be recorded along with the static water level, the date, time, station location, sampling method description, and listing of sample containers including volume and preservative method.

Post-mining monitoring will be conducted as described in Section 7.2.8.2 of this M.R.P.

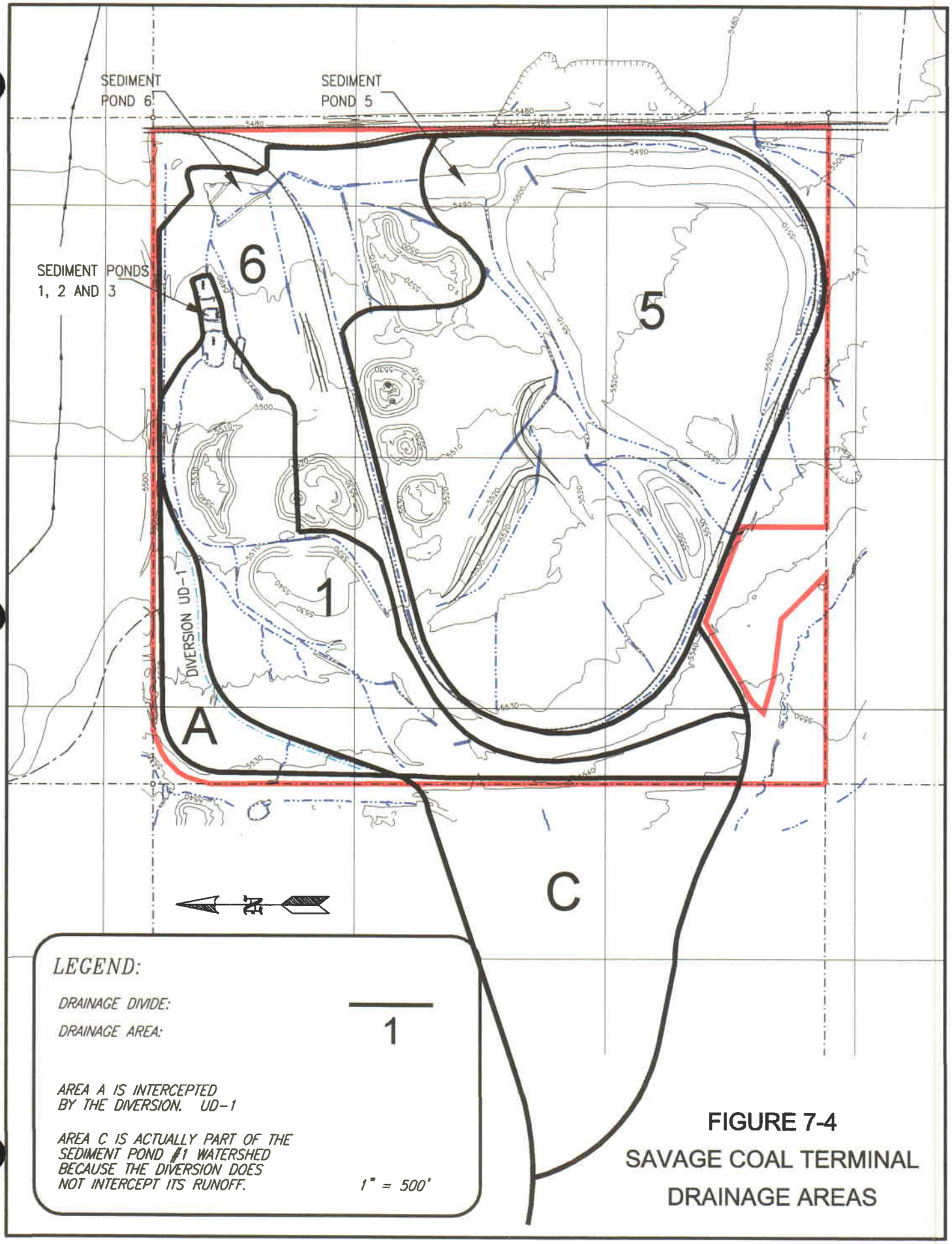

FIGURE 7-4
SAVAGE COAL TERMINAL
DRAINAGE AREAS

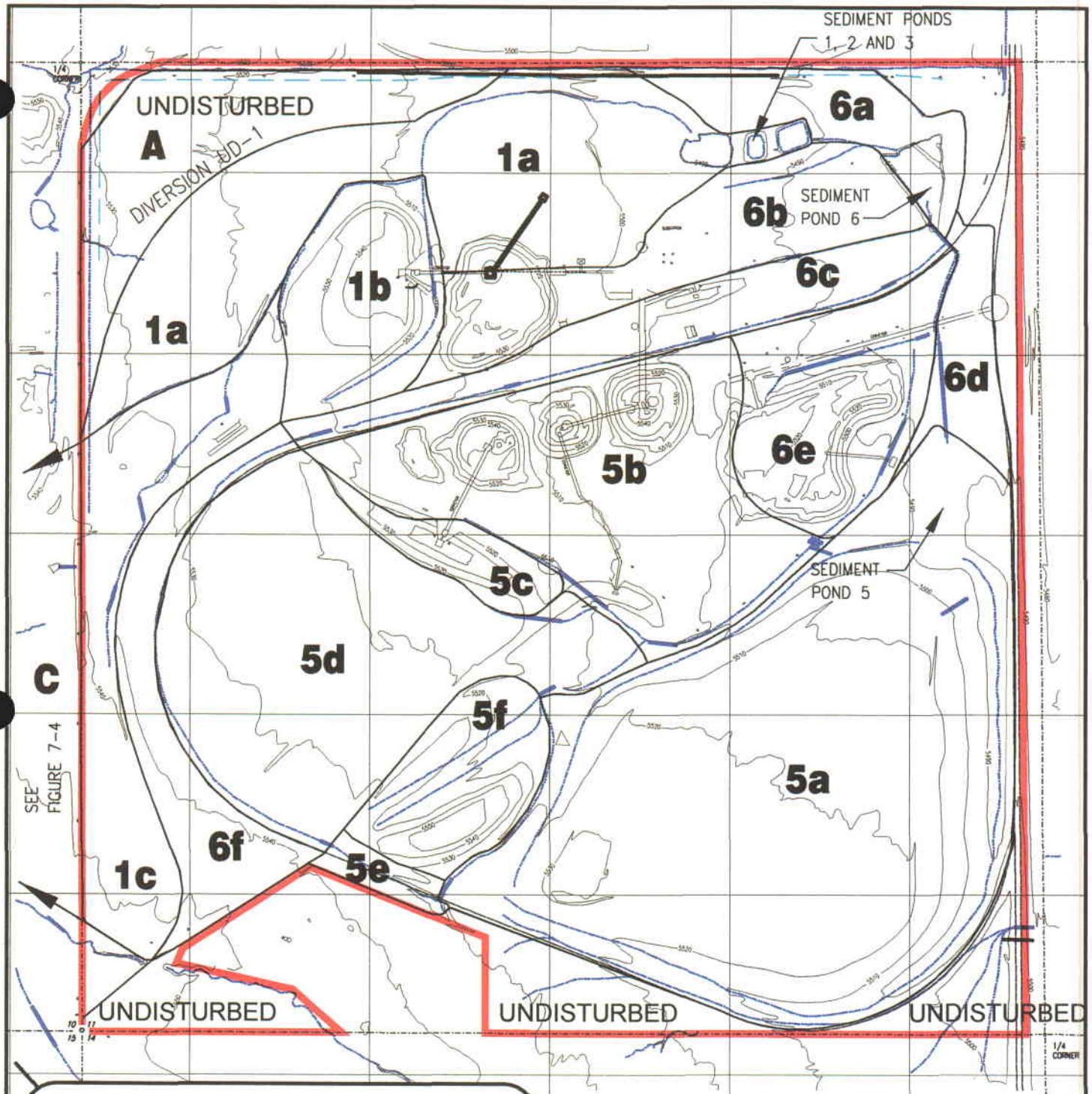

LEGEND:

SUBDRAINAGE BOUNDARY: ———

SUBDRAINAGE AREA: **1a**

All areas starting with 1 drain into Sediment Pond No.1, all areas starting with 5 drain into Pond 5, etc. Area 1c includes Undisturbed Area C.

N

1"=400'

FIGURE 7-5
SAVAGE COAL TERMINAL
AREA SUBDRAINAGES

7.2.2 Mine Plan Area Watersheds and Surface Runoff (continued)

An average curve number for each category was determined based on soil type, general condition, and hydrologic soil group. Hydrologic soil group was determined from the soils map, Plate 2-1. In those areas where the soil type was mapped as disturbed land, hydrologic soil group "D" was assumed. The curve numbers determined are (corresponding with the above categories):

a) 89
b) 80
c) 82
d) 87
e) 87

The ponds, of course, receive direct precipitation and therefore are considered separately from the other categories.

Table 7-16 presents the percentage of each category that was measured in each sub-drainage, and the weighted curve number for each sub-drainage.

Total runoff in each sub-drainage was determined by using the weighted curve numbers, area of each sub-drainage, and SCS rainfall-runoff relationship:

Q = rainfall excess (inches)

$$Q = \frac{(P-0.2S)^2}{P+0.8S}$$

Table 7-16
WEIGHTED CURVE NUMBER DETERMINATION

Drainage Area Number from Figure 7-5	Building Roads, Pads and Embankments CN-90 (%)	Topsoil or Soil Stockpiles CN=80 (%)	Coal Stockpiles CN=87 (%)	Compacted Coal Refuse Piles CN=87 (%)	Other Areas (excluding ponds) CN=87 (%)	Pond Areas (acres)	Total Acreage (acres)	Weighted CN for the Drainage
1a	15.0	-	12.1	-	73	0.61	14.96	87
1b	68.0	-	-	-	32.0	-	5.46	88
1c*	7.43	-	-	-	92.57	0.16**	36.65	87
5a	7.7	-	-	68.9	23.4	0.73	35.87	87
5b	9.2	-	52.3	-	38.5	-	14.31	85
5c	60.2	-	-	-	39.8	-	1.94	88
5d	14.2	-	-	-	85.5	-	17.03	87
5e	57.2	-	-	-	42.8	-	0.84	88
5f	-	10.0	-	-	-	-	4.38	80
6a	5.2	-	-	-	94.8	0.22	3.81	87
6b	66.7	-	26.7	-	6.6	-	5.46	87
6c	50.0	-	-	-	50.0	-	5.55	88
6d	10.0	-	-	-	90.0	-	2.45	87
6e	-	-	-	-	100.0	-	6.80	87
6f	10.0	-	-	-	100.0	-	5.44	87
A	-	-	-	-	100.0	-	7.16	87

* Includes subdrainage C ** Depression, no drainage but not a pond.

Table 7-17
SAVAGE COAL TERMINAL - RUNOFF VOLUMES ESTIMATES

Area No.	Weighted Curve No.	Q in.	A acres	Total Runoff Acre-Feet
1a	87	0.68	14.96	0.848
1b	88	0.73	5.46	0.332
1c*	87	0.68	36.65	2.08
5a	87	0.68	35.87	2.030
5b	85	0.58	14.31	0.692
5c	88	0.73	1.94	0.118
5d	87	0.68	17.03	0.965
5e	88	0.73	0.84	0.051
5f	80	0.39	4.38	0.142
6a	87	0.68	3.81	0.216
6b	87	0.68	5.46	0.309
6c	88	0.73	5.55	0.338
6d	87	0.68	2.45	0.139
6e	87	0.68	6.80	0.385
6f	87	0.68	5.44	0.308
A	87	0.68	7.16	0.406

* Includes the offsite drainage designated C, because area C drains through Pond 1.

Note: Drainage areas are based on figure 7-5 and updated hydrology map and topography.

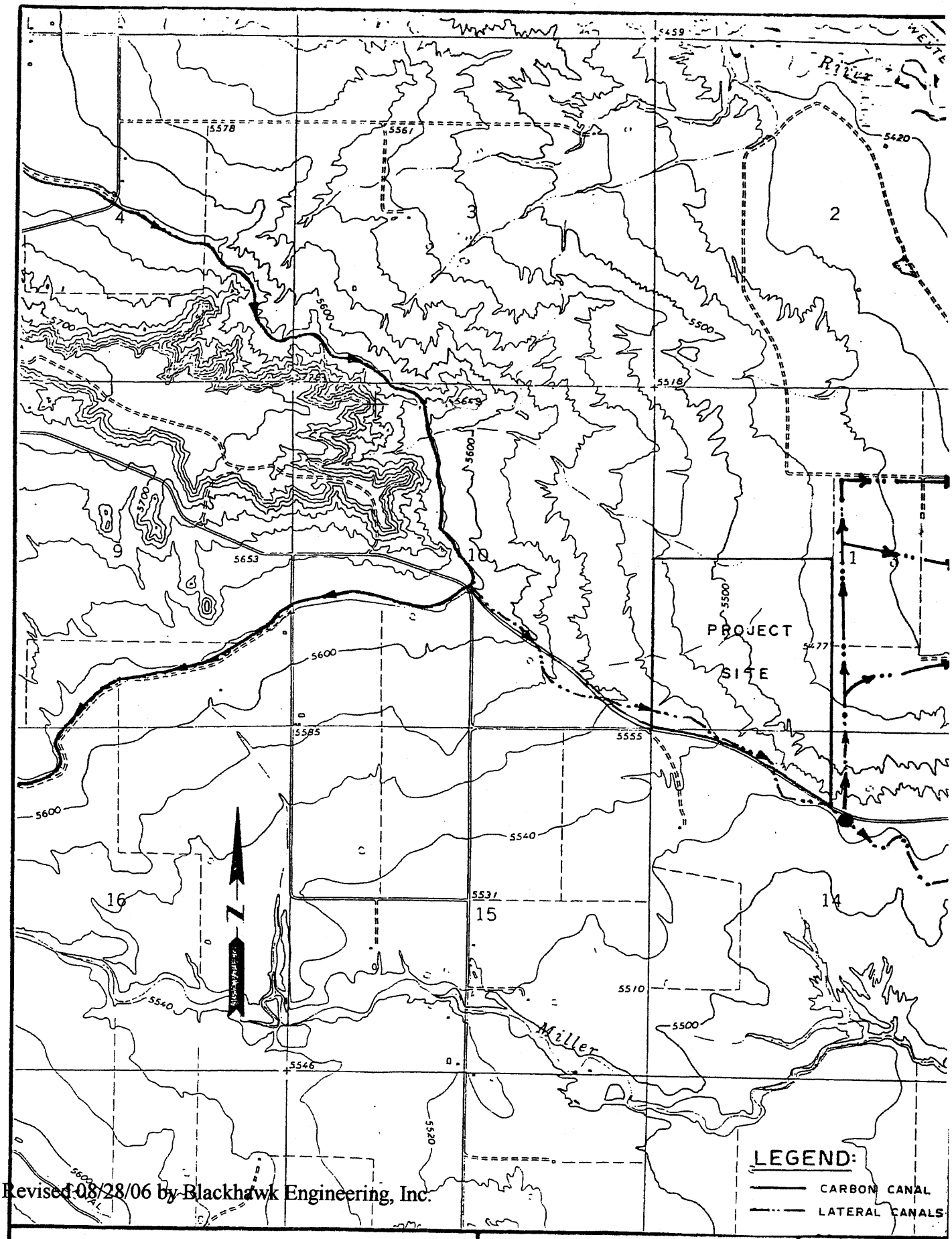

Revised 08/28/06 by Blackhawk Engineering, Inc.

ROLLINS, BROWN & GUNNELL, INC. CONSULTING ENGINEERS	LOCATION OF IRRIGATION CANALS ● Irrigation Intake	FIGURE 7-6

AVF and Zoning Figure

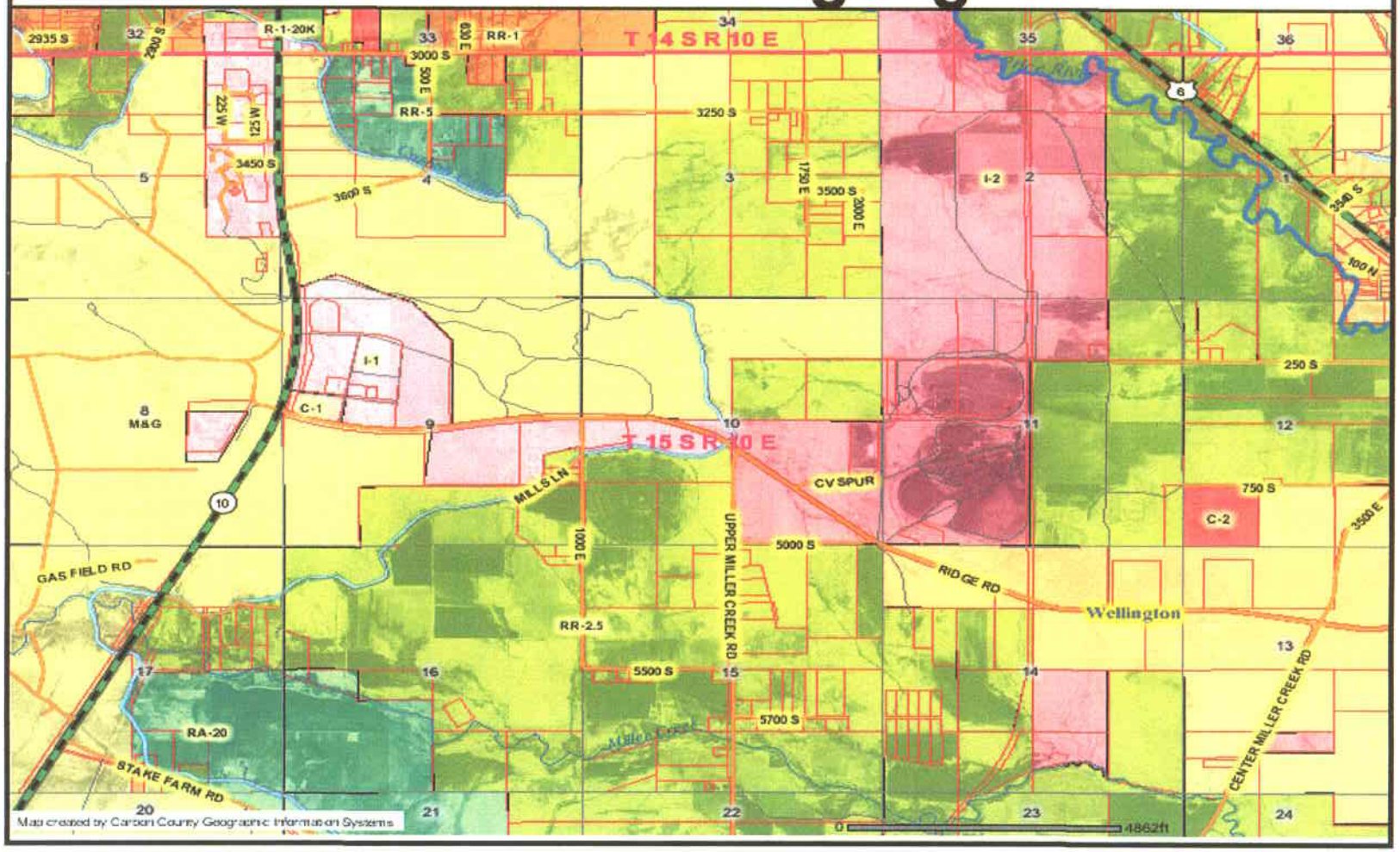

Figure 7-6 A

I-2		Heavy Industrial Zone
RR-2.5		Rural Residential 2.5 Acre Zone
M&G		Mining and Grazing Zone

7.2.3.1 Water Supply

Culinary water is supplied by Price River Water Improvement District through a buried waterline to the facility.

The primary source of water for the facility is from the Price River. A shallow, high-volume well is installed at the Price River north of the site and is pumped on demand via a 6-inch pipeline into a sump located at the northeast corner of the site (see Plates 3-2 and 4-1).

Savage Industries, Inc. has acquired rights to 357 shares of water from Scofield Reservoir. The usage at the facility is measured by a totalizing flowmeter which monitors incoming water from both the pipeline and sedimentation pond sources. Present usage averages approximately 25 acre-feet per year.

Projected future usage with the wash plant and maximum production is estimated at 55.92 acre-ft./year, based on Table 3-4.

7.2.3.2 Undisturbed Runoff Diversions

Runoff from approximately 7.16 acres of undisturbed area to the west of the operations area is intercepted by a diversion ditch and routed around the west and north edge of the facilities area. This undisturbed area includes subarea A shown on Figure 7-4. The diversion is designed to accommodated the peak discharge fro a 10 year - 24 hour precipitation event. The diversion is designed, constructed and maintained to prevent additional contributions of suspended solids to runoff outside the permit area.

7.2.3.2 Undisturbed Runoff Diversions (continued)

Determination of Peak Discharges from Off-Site Area A

The OSM Storm Computer Program was used to determine the peak discharges from the undisturbed area A whose runoff is intercepted by the diversion shown on Figure 7-4 and Plate 7-2. Physical basin parameters were determined from topographic maps. The curve number of 87 was determined from the soil survey and vegetation characteristics. For the 10 year - 24 hour rainfall event, the highest peak discharge to be conveyed by the diversion was found to be 6.3 cfs.

Size of Diversion Channel

The diversion, shown on Figure 7-4, is intended to intercept and divert runoff from drainage A. It was excavated in the native soil, and is earth lined. Low velocities and regular maintenance serve to impede erosion. The channel is maintained with a minimum cross-sectional area of 4 ft^2. A typical diversion cross section is provided in Plate 7-3.

The length of the diversion is about 1650 ft., and the elevation change along it is about 29 ft. The average slope of the channel is therefore about 0.0176.

Manning's formula was used to determine the adequacy of the channel. Manning's N, the roughness coefficient, was assumed to be 0.05.

Table 7-25
CULVERT DESIGN SPECIFICATIONS

Culvert	Design	Diameter	Length	Normal	Velocity
C-1	0.81	1.0	30	0.45	2.38
C-1a	0.81	2.0	55	0.45	2.38
C-2	0.98	1.5	400	0.35	2.80
C-3	3.70	(2) 1.5	60	0.59	2.90
C-4	1.11	1.5	100	0.40	2.05
C-5	9.68	2.0	260	1.35	3.59
C-6	0.80	1.5	30	0.38	2.20
C-6A	0.80	2.0	300	0.38	2.20
C-7	10.56	2.0	40	1.43	4.40
C-8	0.77	1.5	60	0.38	2.20
C-9	1.44	1.5	50	0.51	2.70
C-10	11.97	2.0	40	1.60	4.44
C-12	5.11	1.5	40	1.11	3.64
C-13	5.11	1.5	130	1.17	4.73
C-13A	5.11	1.5	60	1.11	3.64
C-13B	5.11	1.50	100	1.11	3.64
C-15	20.50	2.0	30	2.87*	7.60*
C-16	1.34	2.0	350	0.45	2.10
C-17	0.80	1.5	160	0.46	2.20
C-18	0.80	1.5	100	0.46	2.20
C-19	0.22	1.0	50	0.28	1.19
C-20	0.22	1.0	50	0.28	1.19
C-21	1.11	2.0	200	0.34	2.05
C-22	13.88	2.0	175	2.10****	11.49
C-23	0.15	1.0	45	0.20	1.50
C-24	1.44	1.5	40	0.51	2.70
C-25	1.11	1.5	60	0.40	2.05
C-25A	1.11	1.5	50	0.40	2.05
C-26	1.44	1.5	50	0.51	2.70
C-27	1.44	1.5	50	0.51	2.70
C-28	1.44	1.5	50	0.51	2.70

* Head Water Depth = 3.50 ft.

*** Erosion to be minimized by the use of 9" med. diam. rip-rap at the culvert outlet.

**** Head Water Depth - 3.50 ft.

Station CV-1-W is located in the pumphouse and represents the French Drain water as well as any recirculated water from Pond #6. This station is also monitored on a bi-annual basis.

Bi-Annual sampling will be conducted during the 2nd and 4th Quarters of each year.

7.2.6 Surface Water Monitoring Plan

The surface water monitoring plan has been re-evaluated based on the proposed re-start of the wash plant, and the rewritten PHC in Appendix 7-5. The French Drain (CV-1-W) is sampled per the groundwater monitoring in Section 7.1.6; however, it is also discussed under this section since it may contain recirculated runoff water from Pond #6. The surface water monitoring plan will remain as described in the following portion of this section.

Station CV-1-W, located in the pumphouse, will be monitored bi-annually. Station CV-14-W, located at the NE corner of the property, will also be monitored bi-annually. As indicated above, bi-annual sampling will be conducted during the 2nd and 4th Quarter of each year. Station CV-15-W, located at the outlet of Sediment Pond #6, will be monitored on a monthly basis in accordance with the UPDES Permit. Monitoring data will be electronically submitted to the Division within 60 days of the end of each sampling period. UPDES Discharge Reports are submitted to the Utah Department of Environmental Quality and the Division on a monthly basis. Water monitoring locations are shown on Plate 7-1

WATER MONITORING PROGRAM
SAVAGE COAL TERMINAL

Station	Location	Type	Frequency	Flow Device	Results To	Remarks
CV-1-W	Pumphouse	French Drain	Bi-annually	Time/Volume or Depth	DOGM	Sample during 2nd and 4th Quarters.
CV-14-W	N.E. Corner Property	Ditch	Bi-annually	Time/Volume	DOGM	Sample during 2nd and 4th Quarters.
CV-15-W	Sediment Pond Discharge	Pond Outlet	Monthly	Hand-Held Time/Volume	E.P.A., DOGM, Utah Health Dept.	Monitored per UPDES Permit
S-1-GW	South of French Drain	Ground Water Monitoring Well	Quarterly	Grab Sample Depth	DOGM	Quarterly - 2 years Bi-Annual - After
S-2-GW	South of Pond 5	Ground Water Monitoring Well	Quarterly	Grab Sample Depth	DOGM	Quarterly - 2 years Bi-Annual - After

APPENDIX 7-5

Probable Hydrologic

Consequences Determination

UTAH REGISTERED
#154168
DAN W. GUY
8/4/06
PROFESSIONAL ENGINEER

Appendix 7-5
Probable Hydrologic
Consequences Determination

General

The original Probable Hydrologic Consequences Determination, or PHC, was developed for this site in 1983. At this time, the wash plant was operating full time and refuse was actively being deposited on site.

A series of groundwater monitoring wells were installed to monitor changes in water quality and levels. A sediment control plan was also developed to control surface runofff from the site. At that time, based on information provided in Chapter 7 of the MRP, it was determined that the proposed operation would not have an adverse impact on the hydrologic balance.

Since that time, a number of changes have taken place, including cessation of coal washing and refuse placement, and removal of all ground water monitoring wells after acquiring 18 years of data.

At this time, one more major change is proposed for the site. It is proposed to restart the wash plant, and install a series of settling ponds to remove -28 mesh material from the wash water. Refuse will once again be stored on-site, but only on a temporary basis, not to exceed 1 year from start-up.

Procedure

The PHC Determination is based on information provided in Chapter 7, which includes baseline and operational hydrologic data acquired since 1983.

Groundwater Hydrology

Existing Groundwater Resources

The Savage Coal Terminal is near the middle of Castle Valley, a broad featureless plain between the Wasatch Plateau to the west and the San Rafael Swell to the east. The facility is located on the middle Bluegate shale member of the Mancos Formation and is approximately 500 feet above the Ferron sandstone member of the Mancos Formation. The Bluegate member consists of dark blue-gray marine mudstone and acts as an aquitard. The upper 10 to 20 feet consists of weathered clays, occasional lenses and pods of gravelly residuum, and residual type silty clay loam soils characteristic of the weathered Mancos shale.

Regional Groundwater Hydrology

A water table does exist in some locations above the impermeable Bluegate shale. In the general area, this water table exists in the alluvium or weathered shale and gravelly ponds above the Bluegate shale. The water is of poor quality and accumulations of salt are found where the water table approaches the ground surface. Groundwater is not used for irrigation in the area because of its poor quality. The nearest springs or wells to the Savage Coal Terminal site are located close to the town of Wellington on the opposite side of the Price River. Five wells and one spring exist in the alluvium above the Bluegate shale in this area. These wells and springs are in a different drainage and are not associated with the Savage Coal Terminal site.

Mine Plan Area Aquifers

Monitoring wells were completed in the weathered material above the Bluegate shale. In addition several wells were completed in the Bluegate shale in order to test the hypotheses that the low permeability of this unit isolates the water table aquifer from groundwater in the Ferron sandstone or deeper formations.

A total of 13 monitoring wells were completed on this site from 1980 - 1982. The wells were consistently monitored through 1998, when the wells were approved to be deactivated and removed.

The measurements in the observation wells as recorded in Table 7-1 of Chapter 7 indicate that there is no regional ground water table at the site, although a perched water table exists at some locations on the site. The aerial extent of this perched water table could not be precisely determined from existing monitoring well network.

As previously mentioned, the observation wells were monitored for 18 years at this site. When the wells were finally approved for removal, 5 of the 8 remaining wells had been dry for more than 5 years, 2 wells showed some ground water which appeared to be recharged by the irrigation canal south of the site. Water from one of these wells is also evident as ground water in Sediment Pond No. 5. The last remaining well was in an irrigated field east of the site, on land not controlled by Savage Services Corporation.

When the facilities were first constructed in 1977 - 1978, ground water was present throughout the site, ranging in depths from 0' to 20' from the surface. A French Drain system was placed along the western and northern edge of the property to intercept a majority of the ground water, which appears to be recharged primarily by the irrigation canal systems located west of the property. This ground water is collected in a deep tank located at the northeastern corner of the property, and is regularly monitored as point CV-1W.

The French Drain has been in operation for approximately 28 years, and has been monitored on a regular basis. The inflow continues to range from 20 to 25 gpm. Water quality is poor - typical of ground water in this area - with TDS concentrations running approximately 10,000 mg/l.

Proposed Facilities

The primary change to the operation and hydrology will be the restart of the preparation plant, construction of 2 - 2 celled settling ponds, and temporary storage of refuse on site. The water supply system for the wash plant is already in place as is the refuse storage area. The area proposed for the new settling ponds has been checked for ground water, and none is evident to the proposed depth of the ponds. It should also be noted that previous tests of the coal refuse as well as ground water have shown it to be non-acid and non-toxic. The refuse to be temporarily stored on site from the new washing operation will also be checked on a regular basis for acid/toxic potential.

Effects of Operations on Groundwater

This site has been in operation for over 28 years with no negative impacts to the ground water. During this time, the site has had coal washing and refuse generating activities, as well as a long period of operating as a coal storage and loadout facility.

The only potential for negative impact from the proposed facilities would be from possible acid/toxic contamination of the groundwater from the coal or refuse. This potential will be minimized by regular testing of the refuse for acid/toxic potential, as well as regular monitoring of the groundwater.

Based on the past history of the site, and the proposed new operating and testing procedures, there should be no negative impact to the groundwater resources on this site.

Surface Water Hydrology

Regional Surface Water Hydrology

The regional area is drained by tributaries to the Green and Colorado Rivers; principal tributaries are the Price and San Rafael Rivers and Muddy Creek. The flow is usually intermittent or perennial, in small streams in the mountains and in larger streams that originate in the higher mountains. Snowmelt is major contributor to streamflow and it provides the continuity of flow in the perennial streams as well as some seasonal flow to intermittent streams. Many streams are ephemeral and flow only in direct response to precipitation or snowmelt. Ephemeral flow is characteristic of the lowlands such as Castle Valley where the Savage Coal Terminal facility is located. Summer precipitation does not usually produce much runoff, although intense rainfall may cause high runoff in localized areas.

The site drains into the Price River which flows into the Green River. The water in the upper reaches of the Price River is of high quality; however, as the river traverses the central and lower portion of the Price River basin, the quality of the water in the river steadily degrades due to the geologic nature of the area and to the irrigation return flow which enters the river.

Mine Plan Area Watersheds and Surface Runoff

For the purposes of computing surface runoff and designing water diversion and sediment control structures, the watershed associated with the Savage Coal Terminal site was divided into five subareas as shown on Figure 7-4 in Chapter 7. Subareas A and C are undisturbed areas and include upslope areas to the west of the site. The remaining subareas comprise drainage units that are affected by operations and are subject to sediment control. Surface runoff from subarea A is diverted around the site by a diversion. The remaining subareas drain into sedimentation ponds on site.

Runoff from the disturbed areas on site is directed to a series of 5 sediment ponds by a combination of collection ditches and culverts. All surface hydrologic structures are sized to carry runoff from a 10 year-24 hour storm event, including the storage capacity of the sediment ponds. Sediment Ponds 1, 2 and 3 are in series and flow to Sediment Pond 6. Sediment Pond 5 also flows to Sediment Pond 6. The water from Pond 6 is normally drawn into the pumphouse and pumped back to the wash plant for use in the wash cycle or as dust suppression water. In the event Pond 6 overflows, it is sampled according to the approved UPDES Discharge Permit.

The natural surface runoff in the area is of poor quality with total dissolved solids ranging from 2000 to 3000 mg/l. Surface runoff from most of the site occurs infrequently. Site discharges are even less frequent, with only 2 UPDES discharges within the last 5 years.

Proposed Facilities

The proposed restart of the wash plant, temporary refuse storage and settling ponds will have little, if any, effect on the surface water hydrology at the site. The wash plant will recirculate water, as well as use make-up water from the existing supply system and recirculated runoff water from the sediment ponds. The temporary refuse storage area will be within the existing refuse area, and will be drained by the existing refuse pile ditch to Sediment Pond 5. The new settling ponds will be incised with berms to prevent any inflow of surface runoff. The new disturbed area will drain to the existing disturbed ditch to Sediment Pond 1. The undisturbed area runoff will continue to be diverted around the property by a reconstructed diversion ditch.

Effects of Mining on Surface Water

Protection of the hydrologic balance at Savage Coal Terminal is accomplished by control of runoff from disturbed areas, diversion of runoff from undisturbed areas, and diversion collection and recirculation of water supply and storm water. There are no subsurface operations at this site.

In general, most of the disturbed area runoff, poor quality groundwater, and all plant overflow water is cleaned and recirculated with no discharge from the property. The natural (undisturbed) drainage is allowed to flow into natural channels, bypassing the disturbed areas. Excess french drain water may be released to the Price River. Storm water runoff from disturbed areas may also be released to the Price River once effluent limits have been met.

This site has been in operation for more than 28 years, with no negative impacts to surface water quality or quantity. The proposed new washing scenario is very similar to the original system on this site, and therefore, also should not have any negative effects.

It should be noted that the existing water monitoring program will continue to be implemented to evaluate any potential impacts of the operation.

PHC Determination

In accordance with R645-301-728.100, the proposed operation will not have a negative impact on quality and quantity of surface and ground water under seasonal flow conditions for the proposed permit and adjacent areas.

This determination is based on baseline hydrologic, geologic and 26 years of historical operating and monitoring data for this site.

The following findings are included in this PHC determination:

(1) There are no adverse impacts expected to occur to the gydrologic balance, based on historical data;

(2) No acid-forming or toxic-forming materials are known or expected to be present, based on past and on-going sampling;

(3) There are no expected impacts from the operation on sediment yield, quality parameters, flooding or streamflow alterations or water availability, as discussed in the previous text;

(4) Based on available data, the proposed operation will likely not proximately result in contamination, diminution or interruption of an underground or surface source of water within the proposed permit or adjacent areas which is used for domestic, agricultural, industrial or other legitimate purpose.

APPENDIX 8-1

TOPSOIL STOCKPILE
(AS-CONSTRUCTED)
August 2006

APPENDIX 8-1
TOPSOIL STOCKPILE
AS-CONSTRUCTED - AUGUST 2006

*Station	Area (sq.ft.)	Volume (cu.yds)	Acc. Volume (cu.yds)
0+00	0.00		
		1271.65	4709.80
1+00	2543.29		
		3169.26	11738.00
2+00	3795.23		
		4018.34	14882.72
3+00	4241.44		
		3293.62	12198.57
4+00	2345.79		
		1363.62	5050.44
5+00	381.45		
		190.73	706.39
6+00	0.00		
			49285.93

*Based on Aerial Survey and Cross Sections from Plate 8-2.

APPENDIX 8-3

Soils Evaluation
For
Settling Pond Area

FINAL REPORT

for

ORDER 1 SOIL SURVEY including

SOIL TOPSOIL CHARACTERIZATION

Prepared for

PROPOSED SETTLING POND AREA
SAVAGE COAL TERMINAL
SAVAGE SERVICES CORPORATION
2025 East 5000 South
Price, Utah 84501

Prepared By

Mt. Nebo Scientific, Inc.
330 East 400 South, Suite 6
Springville , Utah 84663
(801) 489-6937

Bruce Chesler, Soil Scientist

August 21, 2006

Introduction

An Order 1 soil survey was conducted on approximately 6.6 acres of Savage Coal Terminal Loadout area, on a previously non-disturbed area owned by Savage Services Corporation, Inc. The active loadout facility is currently under permit by the State of Utah, and comprises 154 total acres, most of which currently has coal loading and processing activities present. The 6.6 acre area study site lies to the northwest of Savage Services offices, and is characterized by gently-sloping Mancos shale fanslopes with a salt desert shrub vegetation type. Two settling ponds with a total area of approximately 2 acres are proposed for this site for coal wash water clarification, along with an undisturbed diversion and an area proposed for topsoil salvage storage along the southwest perimeter of the study site (see Savage Coal Terminal Soils Map, September 2005, Blackhawk Engineering, Inc).

Objectives

Provide a detailed Order 1 Soil Survey is provided on the 6.6 acre site to determine soil conditions and variability in accordance with National Cooperative Soil Survey standards.

Physical and chemical properties of both topsoil and subsoils were tested to determine suitability of topsoil for reclamation purposes according to R645-301-200 Soil Guidelines for Management of Topsoil and Overburden (OGM Price Field Office, October 2005).

Calculate topsoil salvage depths and provide a map showing areas of topsoil salvage and make recommendations to amend the quality of available topsoil materials, based on the above analytical studies and the Order 1 soil survey.

Make recommendations for the salvage operations with suggestions to reclamation specialists when using the topsoil materials to reclaim this site area to UDOGM standards.

Methods

Prior to initiating fieldwork, Order 3 soil survey data from the area was reviewed (Sheet 19 of Soil Survey of Carbon Area, Jensen and Borchert, 1988.) A second, more detailed soil survey reconnaissance in this area was made at the Order 1 level of detail (James Walsh Associates, July 1980). This information was also reviewed and given consideration in my map unit design for the 6.6 area study site. Telephone discussions with Leland Sasser, NRCS Soil Scientist at the Price Field Office, were useful in the correlation and soil taxonomic classifications of these soils types. The current field survey of the study area was accomplished by Bruce Chesler on July 20 and 21, 2006. A telephone discussion between Bruce Chesler, soil surveyor, and Priscilla Burton, Soil Scientist at UDGOM Price Field office on July 18, 2006 was crucial for me, in detailing the scope of the projected soil survey and the type of soil analysis required for laboratory topsoil characterization at this site. Special considerations were made toward observing the extent of, and characterizing any high water table in the area.

An introduction to the proposed disturbed area was given to me by Dan Guy of Blackhawk Engineering, Inc. and the survey stakes representing ditch location and settling pond corners were noted. Spade and auger reconnaissance was made initially to determine soil surface variability, and to choose locations for backhoe soil description and sampling sites. Three soil profiles were chosen to represent map unit variability, then were sampled and bagged by horizon (or depth increment) and sent to BYU Soil and Plant Analysis Laboratory for characterization according to state standards (Table 3, OGM Topsoil Guidelines, 2003).

Soil and Landscape Description

Mancos Shale badlands comprise the geologic parent materials for soil development in the area. These Cretaceous age marine sediments are known from previous research to contain both strongly saline and sodic soil conditions in soils under these climatic conditions (USDA Soil Characterization Data, viewed on NSSC website). High dissolved salt contents, high Sodium Adsorption Ratios and Electrical Conductivities, and greater than 40 % clay content in both the soil epipedons and subsoils are evident in Mancos shale derived materials in general.

The landscape of the study area is characterized by flat to gently-sloping (less than 5 %), fanslopes derived from colluvial and alluvial materials comprised of marine sedimentary rock. These sediments appear in profile as olive to gray colored poorly defined horizons. Due to an arid climatic and the lack of mechanical weathering in a low precipitation area, combined with Mancos shale mineralogy, soil development is weak and difficult to define in the field. Soil moisture regime is Ustic, and soil temperature is mesic at this

site. Soil Classifications at these sites fall within the Entisol Soil Order. Vegetation in the study area ranges from barren land to matted saltbrush and greasewood plant communities, with a shadscale component.

Results and Discussion

Three soil profiles were described in the area between the water diversion ditch and settling pond areas, chosen to represent the soil depth variability at the site. These pedon description sites were based upon previous soil surveys in the area and following a walk across the landscape. Appendix 1 includes the three soil profile descriptions identified as SP-1, 2, and 3. SP-1 is correlated to the Killpack Series, a Fine-silty, mixed, active, calcareous, mesic, Typic Torriorthent (OSD 7/2003), with weathered shale bedrock occurring at a depth of less than forty inches. Profiles SP-2 and SP-3 resemble the Billings Series, Fine-silty, mixed, active, calcareous, Typic Torrifluvent (OSD 7/2003) in that the Mancos shale bedrock is not evident in any depth greater than sixty inches. All three soil profiles were free of apparent mottling or other redoximorphic features which may indicate high water tables in the area. All of the soil profiles contained some concentrations of dissolved salts (crystallization), resulting from their transport and deposition in the profile. These salt concentrations were observed without magnification. Soils were generally moist at the time of sampling (7-21-06) at depths below 36 inches, on account of their dense, massive structure and slow permeability. Pedon SP-2 had the most apparent water content of the three sites. Surface cracks were apparent near SP-2, indicative of the high clay contents in these surface soils.

The clay mineralogy of the Mancos shales include both illite and kaolinite, which may have been a factor in the difficulties in accurately dispersing clays in samples for particle size laboratory analysis. In conversations with soil chemists (Henry Sauer in Denver, Colorado and Bruce Webb, Provo, Utah) the presence of certain clay minerals in these samples may have influenced a complete dispersion of clay. Thus, only surface soil data for mechanical particle sizes were analysed by the lab, and my field estimates of these soil samples were generally underestimated for clays by 20-25% in the field.

One other feature of the soil landscape which pertain to topsoil suitability and reseeding potential of this area are certain land use practices on adjacent properties which have, at times in the past, contributed coal dust and coal waste by-products onto the surfaces of these soils. I noticed that less than 1 inch of coal fines were present, but erratically distributed, on western portions of the study area. Some of the coal waste products (fines) may have already been incorporated into soil profiles in this area.

Soil Chemical and textural properties are presented in Table 1. The chemical analyses concur with projected high salt, sodium, and clay contents generally recognized on Mancos shale derived soils, and referred to in the above discussion. Electrical conductivities in SP-1 were in the good range to 13 inch depths, then fair to poorly rated to 35 inches (bedrock contact). In SP-2, the EC were fair to 24 inch depth, then poor to unacceptable ratings. SP-3 has EC rated only poor to unacceptable.

Sodium Adsorption Ratios at soil SP-1 is fair to good to 13 inches, then poor in the subsoil. SP-2 has fairly rated SAR in the depth increments 0-12 inches and 24-48 inches, otherwise poor to unacceptable rated. SP-3 are all greater than 14 SAR, unacceptable by UDOGM Guidelines (Table 4, Topsoil Suitability Evaluations).

These data indicate to me the presence of both strongly saline conditions and sodic (high SAR) in these soils. Native topsoil (0-12 inches) in the study area were found to be suitable materials for seed and plant media, except for their clayey textures. Subsoils in this area are poorly suited as substitute topsoil material due to their high salt accumulations and clay content over 40% (field estimate). This could be anticipated due to the arid climate and the marine shale mineralogy of the geologic parent material.

Figure 1. shows my recommended depths of topsoil salvage at the three soil map units. The upper 26 inches of SP-1 (Killpack, clayey surface) and upper 24 inches SP-2 (Billings, moist) provide the best choice for topsoil materials with regard to salt content management. Only the upper 6 inches of SP-3 (Billings, eroded) should be considered for replacement topsoil due to high SAR values throughout the subsoils here.

Irrigation with less saline water with the intent of leaching the salts into the lower soil profile is a means whereby beneficial change in chemical composition could occur. Leaching with irrigation water found in the Price River nearby would not appreciably affect the salt movement, because of its inherently high salt contents.

Clay contents are all higher than 40 % in the all topsoils at the sampling sites. My field textural estimates for epipedons were generally 25% less than values derived by mechanical laboratory analysis. Thus, I can assume that a minimum of 40-50% clay particles comprise the lower soil profiles for each site. The management of clays in topsoil suitability poses another serious challenge for plant seed viability and plant growth at this site. Along with very slow permeability, lack of pore space, and their massive structural aggregates, certain types of clay minerals may repel vital plant nutrients. Recommendations I have to improve the physical properties of these high clay content materials include adding some of the waste rock from the coal wash process (sandier material) and using sewage sludge or other organic amendments to the topsoil stockpile to increase soil permeability, porosity, and decrease structural aggregations.

Conclusions

A soil survey of the Order 1 magnitude and soil characterizations for three soils representing the soil landscape variability were made at the Savage property proposed for settling ponds and coal wash water clarification. High dissolved salt contents, high sodium, and high clay contents are three of the more limiting properties of these soils with respect to topsoil salvage and plant regrowth. The results of this soil survey and laboratory analyses make recommendations for the salvage of as much as 26 inches of the topsoil at this site (less in certain areas) to be used as topsoil, and if possible amended in some way to improve aggregation of soil, and water and air movement properties. The use of sewage sludge, organic matter, and fine materials derived from coal wash waste rock are some possibilities suggestions by this contractor to improve topsoil conditions and perhaps allow for additional substitute soil borrowed from the site (up to 3 feet depth) to be used in future reclamation.

I recommend that a qualified soil scientist with soil identification experience be monitoring soil recovery in the field at time of topsoil removal/stockpile operations.

Bibliography

National Soil Survey Center. Lincoln, Nebraska. Soil Characterization Data. Website.

Personal Communications with Leland Sasser, NRCS Soil Scientist, Price Field Office
Personal Communications with Priscilla Burton, Soil Scientist DOGM, Price Utah
Personal Communications with Henry Sauer, Soil Scientist, Walsh and Associates.
Personal Communications with Bruce Webb. Director, BYU Soil and Plant Analysis Lab

Utah Division of Oil Gas and Mining. Price Field Office. October 2005. Guidelines for Management of Topsoil and Overburden. R645-301-200 Soils. 42 pages.

Saxton K. E. and W. J. Rawls. 2006. Website www.BSYSE>WSU>EDU/SAXTON/SOIL WATER. SPAW Model for Estimating Soil-Water Content from Textures.

Schoeneberger, P. J., D. A. Wysocki, E. C. Benham, and W. Broderson. September 2002. Field Book for Describing and Sampling Soils. Version 2.0. NRCS National Soil Survey Center. Lincoln, Nebraska.

Soil Survey of Carbon Area, Utah. USDA-SCS. 1988. Earl H. Jensen and James W. Borchert. 294 pages.

Soil Survey Staff. 2003. Soil Taxonomy, Ninth Edition. USDA-NRCS. US Government Printing Office. Washington D.C. 331 pages.

Soil Survey Staff. 1993. Soil Survey Manual. Agricultural Handbook 318. US GPO. Washington D.C. 4347 pages.

Soil Survey Staff. 2005, as amended. Internet version of National Soils Handbook.

APPENDIX 1. Soil Pedon Descriptions from SP-1, SP-2, SP-3

SP-1

SOIL DESCRIPTION

Soil Type KILLPACK, CLAYEY SURFACE | File No.

Area SAVAGE COAL TERMINAL | Date 7/20/06 | Stop No.

Classification FINESILTY USTIC TORRIORTHENT, MIXED, ACTIVE, CALCAREOUS, MESIC

Location: Section T R

N. Veg. SHADSCALE W/ GREASEWOOD

Parent Material ALLUVIUM OVER RESIDUUM | Climate (Precip.) USTIC

Physiography FANSLOPES | X Surface Rock Fragments Gravel 0 → TR

Relief SLIGHTLY CONVEX | Drainage SPD | Surface Rock Fragments Cobble 0

Elevation | Gr.water NONE | Surface Rock Fragments Stones 0

Slope 2 | Range 1-3% | Moisture — | Surface Rock Fragments Other 0

Aspect/Degrees 40° | Root Distr. | % Clay *PSCS >35 (Est)

Erosion NONE → SLIGHT | % Coarse fragments*PSCS 0 | % Coarser than V.F.S.*PSCS <20

Permeability SLOW | Range Site

GPS Latitude N 12 S 0519190 | Microbiotic Crust Class NONE

GPS Longitude W UTM 4375819 | Rock Formation/Type MANCOS SHALE

GPS Elevation 1666 M. | Topo Quad Name

Soil Temp at 20" F NOT MEASURED | Photo Number

Additional Notes SECONDARY DEPOSITS OF GYPSUM AND CALCIUM CARBONATES COMMON
COAL DUST FINES ERRATICALLY OCCUR ON SURFACES < 1 INCH DEPTH
PHOTOS 1 + 2 PEDON AND LANDSCAPE

BRUCE CHESLER DESCRIBER

FIELD / LAB

BACKHOE PIT 4½ FEET DEEP

*Control Section Average

Horizon	Inch Depth	Color Dry	Color Moist	Texture Clay	Structure	Consistence Dry	Consistence Moist	Consistence Wet	Reaction Effer.	Boundary	Rock Frags	Root	Pore	Ped Surface Features
A	0-4	10YR 6/2	2.5Y 4/3	CLAY / SI	2CPL → MGR	SH	FI	S P	VE	CS	TR COAL FINE + SS	2VF	2VF TV 2F.	
C1	4-12	2.5Y 6/2	2.5Y 4/3	SICL / 30	2C-M SBK	SH	FI	S P	VE	CW	/	NF	2VF 1	GYSUM + CACO3 FILAMENTS
C2	12-26	2.5Y 7/1	2.5Y 4/2	SICL / 31	3C SBK	HA	VFI	S P	VE	GW	/	NF	NF. 1FTV	GYPSUM XTAL CACO3 NODES AND FILAMENTS
CY	26-35	5Y 7/2	5Y 5/3	SICL / 33	3C-M SBK	VH	VFI	S P	VE	G.S	10 SHALE FRAGS	/	/	GYPSUM CRYSTALS & SHALE FRAGS
Cr	35+	35-50% WEATHERED OLIVECOLORED SHALE BEDROCK												

SP-2

SOIL DESCRIPTION

Soil Type: BILLINGS, MOIST PHASE | File No.

Area: SAVAGE COAL TERMINAL | Date: 7/20/06 | Stop No.

Classification: FINE-SILTY TYPIC TORRIFLUVENT, MIXED ACTIVE, CALCAREOUS MESIC

Location: Section T R

N. Veg.: GREASEWOOD

Parent Material: ALLUVIUM | Climate (Precip.): USTIC

Physiography: TOESLOPE | Surface Rock Fragments Gravel: 0

Relief: PLANAR | Drainage: POORLY DRAINED | Surface Rock Fragments Cobble: 0

Elevation | Gr.water: NONE APPARENT | Surface Rock Fragments Stones: 0

Slope: 1 | Range: 1-2% | Moisture: YES, BELOW 48" | Surface Rock Fragments Other: 0

Aspect/Degrees: 50° | Root Distr. | % Clay *PSCS: >40% (EST)

Erosion: NONE | % Coarse fragments*PSCS: 0 | % Coarser than V.F.S.*PSCS: <20%

Permeability: SLOW | Range Site

GPS Latitude N: 0519259 | Microbiotic Crust Class: NONE

GPS Longitude W: 4375852 | Rock Formation/Type: MANCOS

GPS Elevation: 1676 M | Topo Quad Name: PRICE

Soil Temp at 20" F | Photo Number

Additional Notes: BACKHOE PIT 8 FEET DEEP OBSERVED. BRUCE CHESIER DESCRIBER

SOIL MOIST FROM 48-96 INCHES

SECONDARY GYPSUM AND CALCIUM CARBONATES COMMON IN SOIL

*Control Section Average

Horizon	Depth (Inches)	Color Dry	Color Moist	Texture / Clay	Structure	Consistence Dry	Consistence Moist	Consistence Wet	Reaction Effer.	Boundary	Rock Frags	Root	Pore	Ped Surface Features
A1	0-6	2.5Y 5/1	2.5Y 3/2	SiC / 29*	3M,C ABK → MGR	LD	FI	S P	VE	CS	/	1VF 1F 1M	2VF i 2F tu	PLATY STRUCTURES
A2	6-12	2.5Y 6/3	2.5Y 4/3	SiCL / 29	3C-M SBK	VH	FI	S P	VE	CS	/	1VF 1F 1M	1VF i 1F tu	
C1	12-24	2.5Y 6/2	2.5Y 4/2	SiCL / 33	3C SBK	VH	VFI	S P	VE	GW	/	1VF	1VF tu,i	FEW VFAINT MOTTLES, ROOT CHANN
Cy1	24-48	2.5Y 6/3	2.5Y 5/2	SiCL / 32	3C SBK	VH	VFI	S P	VE	GW	/	/	1VF i	GYSUM & CACO3 FILAMENTS
Cy2	48-72	5Y 5/2	5Y 4/1	SiCL / 30	MASSIVE	EH	EFI	S P	VE	DW	/	/	1VF T	GYSUM CRYSTALS
Cy3	72-96	5Y 6/2	5Y 5/3	SiC / 47	MASSIVE	EH	EFI	VS VP	SE		/	/	/	GYPSUM CRYSTALS

* LAB ANALYSIS 54% CLAY 0-6" DEPTH

SP-3

SOIL DESCRIPTION

Soil Type: BILLINGS, ERODED PHASE | File No.

Area: SAVAGE COAL TERMINAL | Date: 7-21-06 | Stop No.

Classification: FINE-SILTY USTIC TORRIFLUVENT, MIXED, ACTIVE, CALCAREOUS, MESIC

Location: Section T R

N. Veg.: MATTED SALTBRUSH, WEEDS, GREASEWOOD

Parent Material: ALLUVIUM, RESIDUUM FROM SHALE | Climate (Precip.): USTIC

Physiography: FANSLOPE | Surface Rock Fragments Gravel: 0

Relief: SL. CONCAVE → UNDULATING | Drainage: PD | Surface Rock Fragments Cobble: 0

Elevation | Gr.water: NONE | Surface Rock Fragments Stones: 0

Slope: 2% | Range: 1-2 | Moisture: BELOW 36" | Surface Rock Fragments Other: 0

Aspect/Degrees: 60 | Root Distr.: 0-12" | % Clay *PSCS: > 40%

Erosion: SLIGHT - MODERATE | % Coarse fragments*PSCS: 0 | % Coarser than V.F.S.*PSCS: < 20%

Permeability: SLOW RILL EROSION | Range Site

GPS Latitude N: 0519252 | Microbiotic Crust Class: NONE

GPS Longitude W: 4375912 | Rock Formation/Type: MANCOS SHALE

GPS Elevation | Topo Quad Name

Soil Temp at 20" F | Photo Number

Additional Notes: BACKHOE PIT 5+ FEET DEEP DESCRIBED BY BRUCE CHESLEY

POSSIBLY CLASSIFIED SAGERS SERIES IF THE SITE IS UPLAND

SOIL SURFACE CRACKS + SUBSIDENCE APPARENT W/ CHEMICAL SOIL CRUSTS

SMALL 1/2-1' ARROYOS DISSECT LANDSCAPE W → E DIRECTION

*Control Section Average

Horizon	Inches Depth	Color Dry	Color Moist	Texture / Clay	Structure	Consistence Dry	Consistence Moist	Consistence Wet	Reaction / Effer.	Boundary	Rock Frags	Root	Pore	Ped Surface Features
A	0-6	2.5Y 5/3	2.5Y 4/2	SiL / 27	3M-C SBK → MGR	SH	FR	SS PS	VE	CS	/	IVF IF	2VF IF IN	SOME PLATY SFC STRUCTURES CHEMICAL CRUST SFC CRACKS
A	6-12	2.5Y 5/2	2.5Y 4/3	SiCL /	3M-C ABK	HA	FI	S P	VE	CW	/	IVF	IFT IVF IN	CACO3 FILAMENTS + DISSEMINATED
C1	12-24	2.5Y 6/3	2.5Y 4/2	SiCL / 32	3MC SBK	HA	VFI	S P	VE	CW	/	/	IVF-F IN	GYPSUM CRYSTALS CACO3 NODULES + FILAMENTS
C2	24-48	5Y 5/2	5Y 4/2	SiC / 42	MASSIVE	VH	EFI	VS VP	VE	GW	/	/	/	CACO3 FILAMENTS MOIST
CY	48-60+	5Y 6/2	5Y 5/3	SiC / 49	MASSIVE	EH	EFI	VS VP	SE		/	/	/	GYPSUM CRYSTALS MOIST-WET

* LAB MECHANICAL ANALYSIS (48% CLAY)

BYU Soil Sample Site Laboratory Analysis SAVAGE LOADOUT SITE

													Cations (mg/kg)					
Sample Site	Soil Depth (in.)	Lab #	Sand (%)	Clay (%)	Silt (%)	vfsand %	USDA tex	Saturation %	pH	EC (mmhos/cm)[1]	$CaCO_3$	Total Organic Carbon %	Soluble meq/L Ca	Soluble meg/L Mg	Soluble meg/L K	Soluble meg/L Na	mg/Kg P	mg/Kg NO3-N
A SP-1	0-4	975.00	21.00	51.28	27.72	14.80	clay	46.51	7.77	3.30	24.25	1.80	21.94	4.69	0.62	24.15	5.35	8.77
C1 SP-1	13-Apr	976	16.92	53.28	29.80	11.68	silty clay	44.04	7.69	3.60	24.47	0.70	140.09	7.47	0.47	15.03	6.43	9.11
SP-1	13-26	977	no data	no data	ND	ND		46.52	8.01	8.50	21.90	0.40	25.16	28.59	0.16	63.44	2.45	14.28
SP-1	26-35	978	ND	ND	ND	ND		50.38	8.22	9.50	17.89	0.30	25.93	44.59	0.17	130.43	0.36	12.00
CR SP-1	35 plus	979	ND	ND	ND	ND		53.02	7.99	10.00	9.36	0.01	22.56	45.23	0.23	83.48	0.25	18.43
SP-2	0-6	980	17.28	54.28	28.44	12.56	silty clay	43.96	7.67	4.60	23.77	1.70	28.80	7.04	0.01	22.04	6.43	17.16
SP-2	6–12	981	no data	no data	no data	no data		55.95	7.70	4.60	21.24	0.70	30.17	10.03	0.23	22.59	3.13	7.42
SP-2	12–24	982	ND	ND	ND	ND		49.03	7.91	8.00	22.92	0.20	27.65	33.49	0.20	58.10	3.48	8.39
SP-2	24-48	983	ND	ND	ND	ND		58.82	8.55	9.50	16.56	0.02	17.96	146.56	0.24	73.46	0.03	8.69
SP-2	48-72	984	ND	ND	ND	ND		60.80	8.55	10.10	17.05	0.06	17.15	142.93	0.42	172.52	2.79	1.03
SP-2	72-96	985	ND	ND	ND	ND		59.09	8.53	5.10	17.32	0.02	17.03	138.88	0.58	278.26	4.99	4.62
SP-3	0-6	986	14.28	48.56	37.16	10.12	silty clay	50.85	8.30	14.00	20.71	1.00	25.85	6.83	1.01	161.74	7.78	28.32
SP-3	6 to 12	987	no data	no data	no data	no data		62.89	8.63	20.00	19.91	0.40	20.94	10.24	0.40	461.22	9.94	1.03
SP-3	12 to 24	988	ND	ND	ND	ND		63.79	8.68	30.00	17.95	0.07	17.82	33.92	0.33	439.65	1.34	20.61
SP-3	24-48	989	ND	ND	ND	ND		66.82	8.76	30.00	20.70	0.03	16.83	172.80	0.74	745.74	1.23	10.42
SP-3	48-72	990	ND	ND	ND	ND		69.06	8.67	30.50	22.51	0.02	16.50	160.21	0.56	617.74	2.68	3.36

Table 1 - Soil Chemical and Textural Properties at SAVAGE LOADOUT SITE

																	Cations (mg/kg)					
Sample Site	Soil Depth (in.)	Lab #	Sand (%)	Clay (%)	Silt (%)	vfsand %	USDA tex	Saturation %	pH	EC (mmhos/cm)*	$CaCO_3$	Total Organic Carbon %	SAR	Est. K Factor	AWC %		Soluble meq/L Ca	Soluble meq/L Mg	Soluble meq/L K	Soluble meq/L Na	mg/Kg P	mg/Kg NO3-N
SP-1	0-4	975	21.00	51.28	27.72	14.80	clay	46.51	7.77	3.30	24.25	1.80	6.62	0.32	12.00		21.94	4.69	0.62	24.15	5.35	8.77
SP-1	4 to 13	976	16.92	53.28	29.80	11.68	silty clay	44.04	7.69	3.60	24.47	0.70	1.75	0.28	14.00		140.09	7.47	0.47	15.03	6.43	9.11
SP-1	13-26	977	no data	no data	ND	ND		46.52	8.01	8.50	21.90	0.40	12.25	0.28	14.00		25.16	28.59	0.16	63.44	2.45	14.28
SP-1	26-35	978	ND	ND	ND	ND		50.38	8.22	9.50	17.89	0.30	21.29	0.28	14.00		25.93	44.59	0.17	130.43	0.36	12.00
SP-1	35 +	979	ND	ND	ND	ND		53.02	7.99	10.00	9.36	0.01	14.34	0.28	14.00		22.56	45.23	0.23	83.48	0.25	18.43
SP-2	0-6	980	17.28	54.28	28.44	12.56	silty clay	43.96	7.67	4.60	23.77	1.70	5.21	0.32	14.00		28.80	7.04	0.01	22.04	6.43	17.16
SP-2	6–12	981	no data	no data	no data	no data		55.95	7.70	4.60	21.24	0.70	5.04	0.28	14.00		30.17	10.03	0.23	22.59	3.13	7.42
SP-2	12–24	982	ND	ND	ND	ND		49.03	7.91	8.00	22.92	0.20	10.51	0.28	14.00		27.65	33.49	0.20	58.10	3.48	8.39
SP-2	24-48	983	ND	ND	ND	ND		58.82	8.55	9.50	16.56	0.02	8.10	0.28	14.00		17.96	146.56	0.24	73.46	0.03	8.69
SP-2	48-72	984	ND	ND	ND	ND		60.80	8.55	10.10	17.05	0.06	19.28	0.28	14.00		17.15	142.93	0.42	172.52	2.79	1.03
SP-2	72-96	985	ND	ND	ND	ND		59.09	8.53	5.10	17.32	0.02	31.52	0.28	14.00		17.03	138.88	0.58	278.26	4.99	4.62
SP-3	0-6	986	14.28	48.56	37.16	10.12	silty clay	50.85	8.30	14.00	20.71	1.00	40.02	0.32	14.00		25.85	6.83	1.01	161.74	7.78	28.32
SP-3	6 to 12	987	no data	no data	no data	no data		62.89	8.63	20.00	19.91	0.40	116.55	0.28	14.00		20.94	10.24	0.40	461.22	9.94	1.03
SP-3	12 to 24	988	ND	ND	ND	ND		63.79	8.68	30.00	17.95	0.07	86.44	0.28	14.00		17.82	33.92	0.33	439.65	1.34	20.61
SP-3	24-48	989	ND	ND	ND	ND		66.82	8.76	30.00	20.70	0.03	79.59	0.28	14.00		16.83	172.80	0.74	745.74	1.23	10.42
SP-3	48-72	990	ND	ND	ND	ND		69.06	8.67	30.50	22.51	0.02	65.72	0.28	14.00		16.50	160.21	0.56	617.74	2.68	3.36

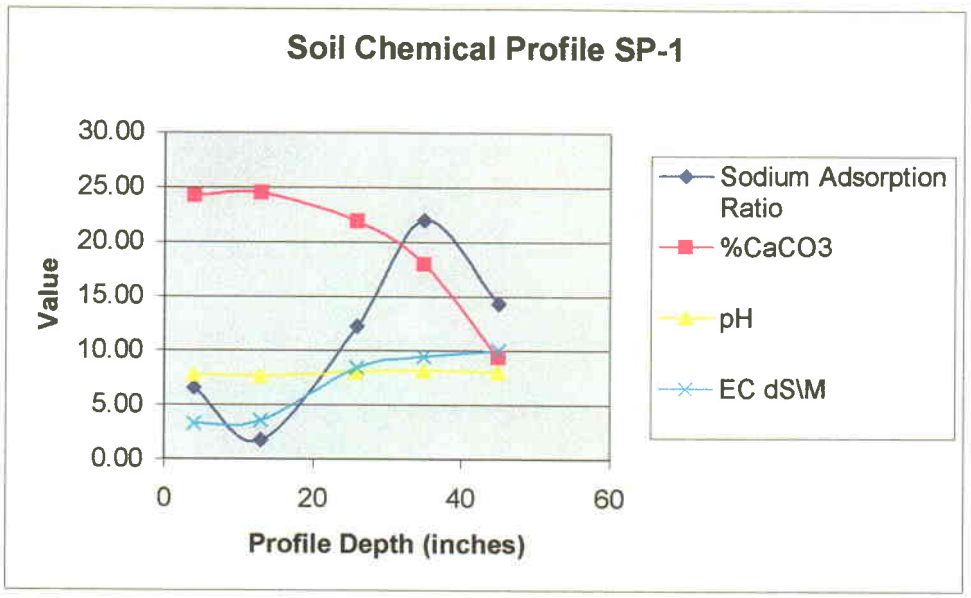

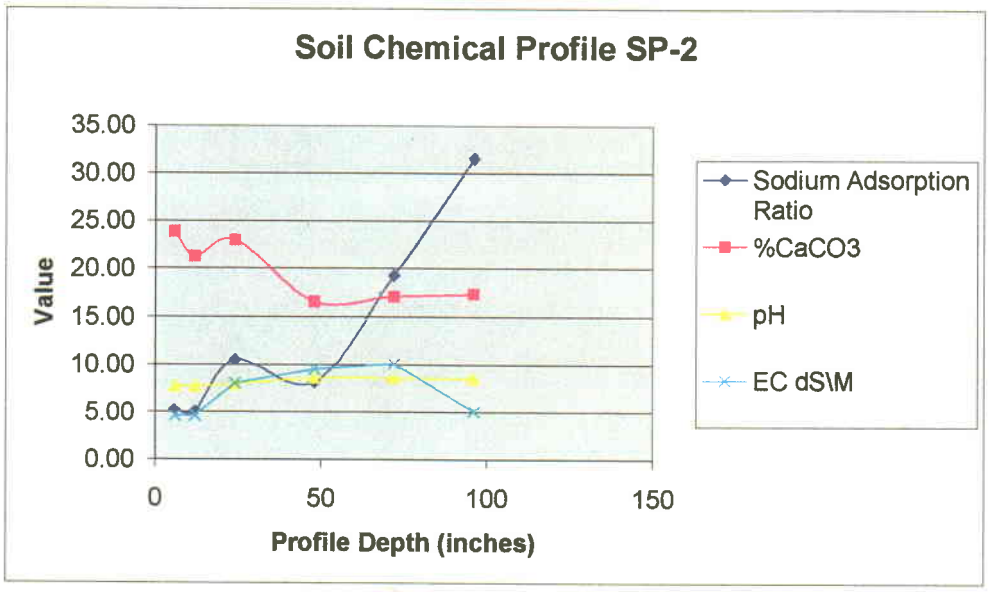

Figure 1

Soil Chemical Profiles, At Savage Loadout sites SP-1, SP-2

courtesy of Henry Sauer, Soil Scientist, Walsh and Associates, Inc.

FIGURE 2. Soil Chemical Profile for SP-3, Savage Loadout Site

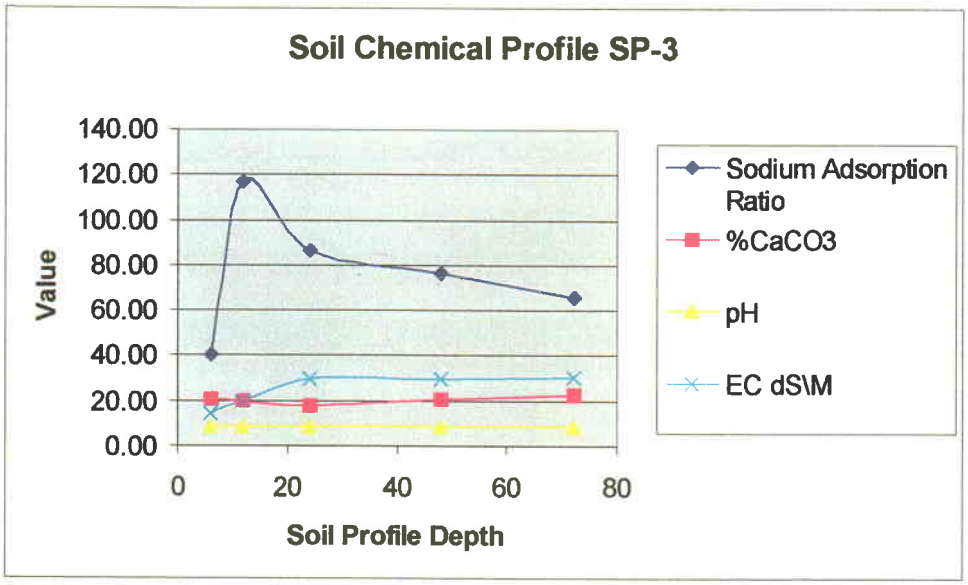

Graph courtesy of Henry Sauer, Soil Scientist, Walsh and Associates, Inc.

APPENDIX 1
PEDON SP-3 PHOTOGRAPHS including landscape position

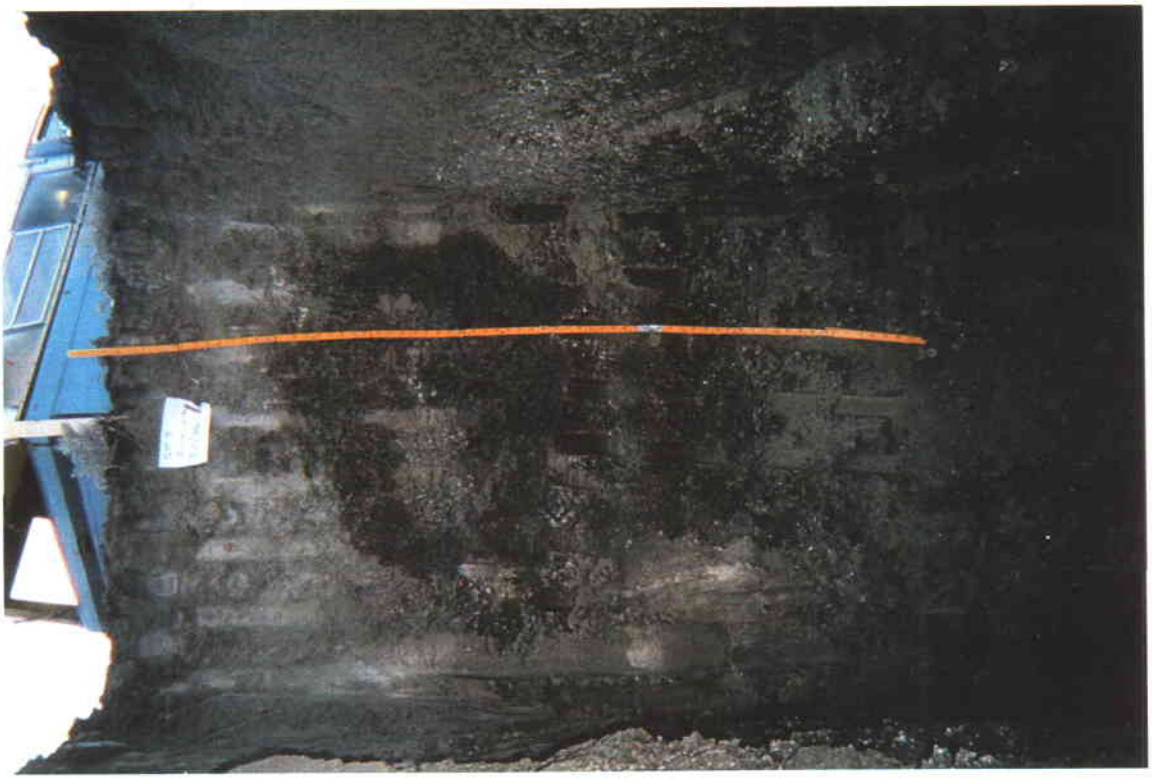

APPENDIX 1
PHOTOGRAPHS OF SP-2, with geographic setting

APPENDIX 1.
PHOTOGRAPHS of PEDON SP-1, with landscape position

FIGURE 1. SOIL SALVAGE MAP

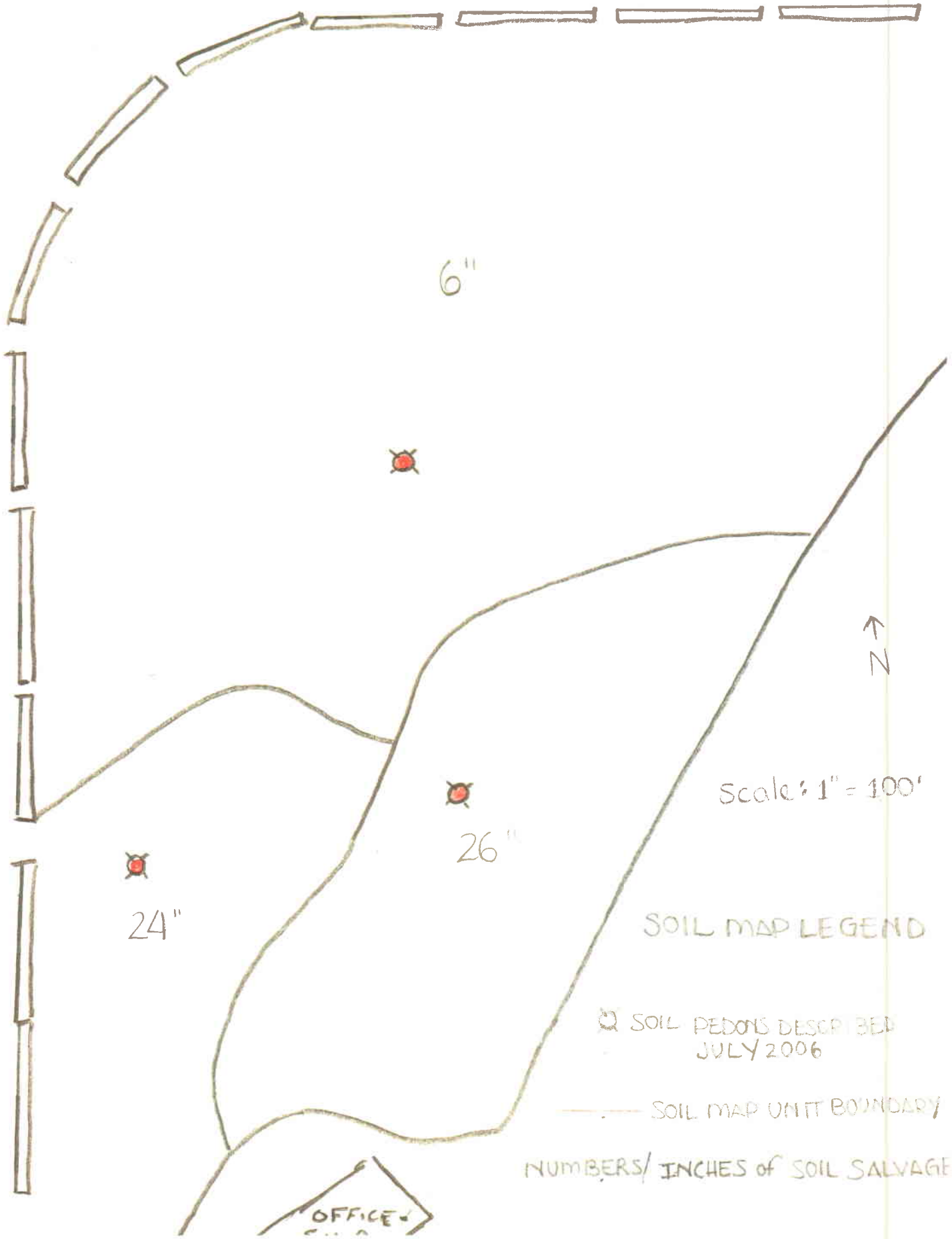

rabbitbrush (Chryothamnus viscidiflorus) followed by shadscale (Atriplex confertifolia) and Gardner's saltbush (Atriplex gardneri). Six other shrub species occur in the affected area; however, these species are more limited to number.

Sample adequacy was attained for total shrub density (see Table 9-11). No significant difference in shrub density was found to exist between the reference and affected areas (t=1.1, p=0.29). Shrub species composition was also similar between these two areas (Sorensen's Index of Similarity = 87.5%), although the relative contribution of each species to each area's overall shrub density differed.

The greasewood phase of the salt desert (shadscale) community type (see 1c on the Vegetation Map, Plate 9-1) appears to have been altered by some recent environmental changes. Shrub density and diversity is atypically low for this community type. Many dead and dying shrubs are also in evidence here. Because of the dramatic reduction in the size of the shrub populations which appeared to formerly characterize this phase and the small area this phase occupies on the site, the decision was made to exclude this phase from the density analysis for the affected area sampled.

9.4 Threatened and Endangered Species

No plants or animals cited by the U.S. Fish and Wildlife Service (USFWS) as threatened or endangered have been found at Savage Coal Terminal. The new proposed disturbed area for the settling ponds has been rechecked, and no T&E or Candidate species as described on Table 9-12 have been noted.

Table 9-12
Federally Listed
Threatened (T), Endangered (E), and Candidate (C) for
Carbon County, Utah

Common Name	Scientific Name	Status
Uinta Basin Hookless Cactus	*Sclerocactus glaucus*	T
Graham Beardtongue	*Penstemon grahamii*	T Proposed
Humpback Chub	*Gila cypha*	E
Bonytail	*Gila elegans*	E
Colorado Pikeminnow	*Ptychocheilus lucius*	E
Razorback Sucker	*Xyrauchen texanus*	E
Bald Eagle	*Haliaeetus leucocephalus*	T
Yellow-billed Cuckoo - Possibly	*Coccyzus americanus*	C
Mexican Spotted Owl - Possibly	*Strix occidentalis lucida*	T
Black-footed Ferret - Unconfirmed	*Mustela nigripes*	E Extirpated

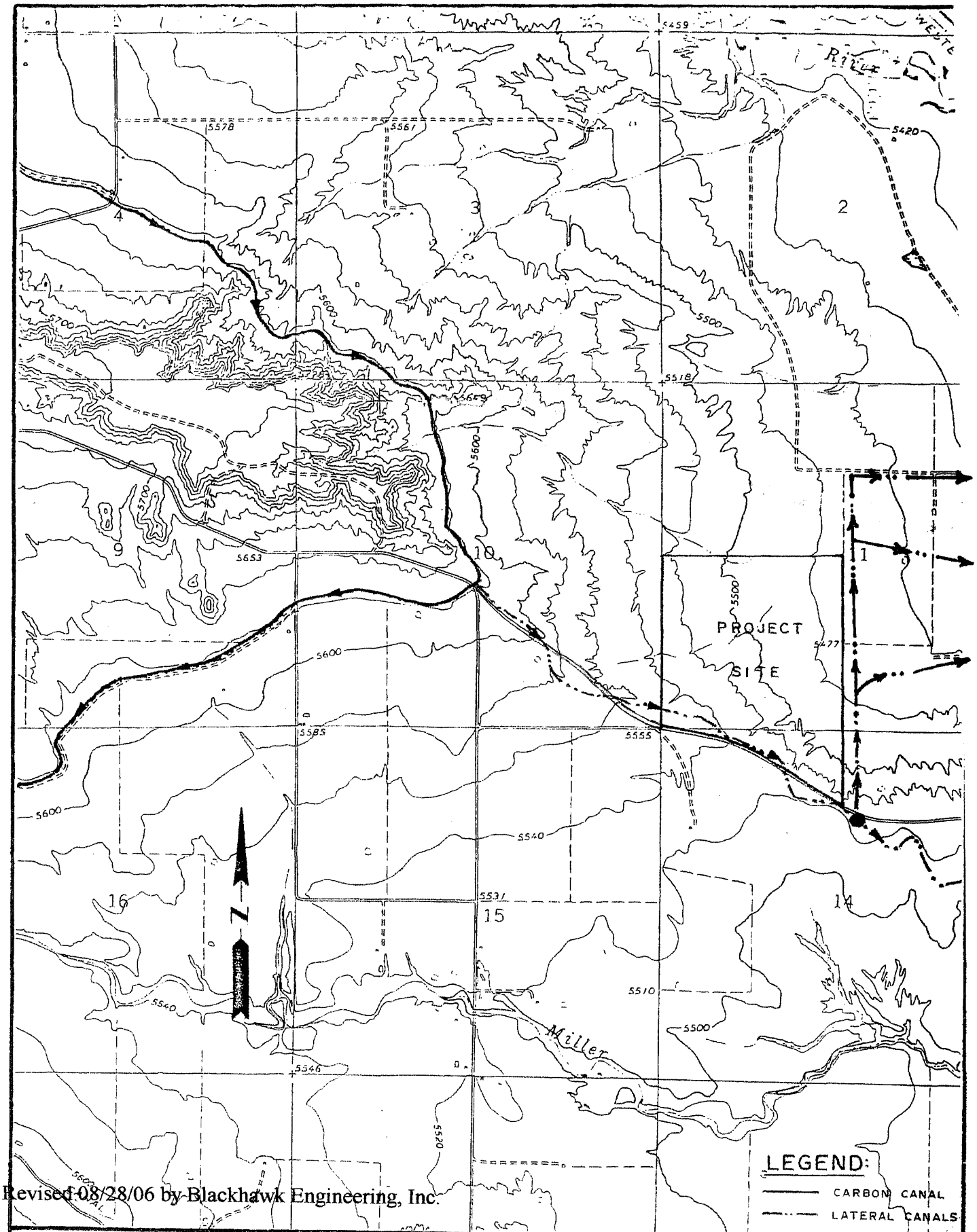

Revised 08/28/06 by Blackhawk Engineering, Inc.

ROLLINS, BROWN & GUNNELL, INC. CONSULTING ENGINEERS	LOCATION OF IRRIGATION CANALS ● Irrigation Intake	FIGURE 7-6

RECEIVED
MAR 2 1 2007
DIV. OF OIL, GAS & MINING

RECEIVED
AUG 3 1 2006
DIV. OF OIL, GAS & MINING

APPENDIX 8-1

TOPSOIL STOCKPILE
(AS-CONSTRUCTED)
August 2006

APPENDIX 8-1
TOPSOIL STOCKPILE
AS-CONSTRUCTED - AUGUST 2006

*Station	Area (sq.ft.)	Volume (cu.yds)	Acc. Volume (cu.yds)
0+00	0.00		
		1271.65	4709.80
1+00	2543.29		
		3169.26	11738.00
2+00	3795.23		
		4018.34	14882.72
3+00	4241.44		
		3293.62	12198.57
4+00	2345.79		
		1363.62	5050.44
5+00	381.45		
		190.73	706.39
6+00	0.00		
			49285.93

*Based on Aerial Survey and Cross Sections from Plate 8-2.

APPENDIX 3-5

Reclamation Cost Estimate

August 2006

Bonding Calculations

Direct Costs		
Subtotal Demolition and Removal	$834,525.00	
Subtotal Backfilling and Grading	$309,955.00	
Subtotal Revegetation	$633,979.00	
Direct Costs	$1,778,459.00	
Indirect Costs		
Mob/Demob	$177,846.00	10.0%
Contingency	$88,923.00	5.0%
Engineering Redesign	$44,461.00	2.5%
Main Office Expense	$120,935.00	6.8%
Project Mainagement Fee	$44,461.00	2.5%
Subtotal Indirect Costs	$476,626.00	26.8%
Total Cost	$2,255,085.00	
Escalation factor		0.016
Number of years		1
Escalation	$36,081.00	
Reclamation Cost Escalated	$2,291,166.00	
Bond Amount (rounded to nearest $1,000) 2007 Dollars	$2,291,000.00	
Bond Posted 2007 dollars	$2,525,000.00	
Difference Between Cost Estimate and Bond	$233,834.00	
Percent Difference	10.21%	

Ref.	Description	Materials	Means Reference Number	Unit Cost	Unit	Length	Width	Height	Diameter	Area	Volume	Weight	Density	Time	Number	Unit	Swell Factor	Quantity	Unit	Cost
	Shop Office 01																			14960
	Scale House 02																			1569
	No 1 Truck Dump 03																			4413
	No 2 Truck Dump 04																			2374
	No 3 Truck Dump 05																			1410
	No 4 Truck Dump 06																			1725
	No 5 Truck Dump 07																			1051
	Conveyors Eight 08																			8657
	Conveyor 48 inch 09																			8657
	No 4 Radial Stacker 10																			3503
	No 5 Radial Stacker 11																			971
	Conveyor Piers 12																			1863
	Support Structure 13																			1474
	Water Tank 14																			7936
	Reclaim Tunnel 15																			32514
	Portable Hopper 16																			909
	Trailer 17																			1374
	Transfer Bin 18																			1994
	Preparation Plant 19																			201520
	Substation 20																			5777
	Fuel Storage 21																			4130
	Reclaim Control Bld 22																			1381
	Sample House 23																			4163
	Stacking Tube 24																			41372
	Loadout Silo 25																			204548
	Railroad 26																			15000
	Powerline 27																			2500
	Aphalt 28																			111542
	Pumphouse 29																			12478
	River Pump 30																			184
	Guard Rails 31																			60390
	Culverts 32																			1481
	Stacking Tube 33																			23542
	Coal Sampler Addition 34																			5361
	Conveyor Transfer 35																			16177
	New Shop Oil Storage Bld 36																			18892
	Plant Expansion 37																			6733
	Total																			634626

Ref.	Description	Materials	Means Reference Number	Unit Cost	Unit	Length	Width	Height	Diameter	Area	Volume	Weight	Density	Time	Number	Unit	Swell Factor	Quantity	Unit	Cost
	Shop Office 01																			
	Structure's Demolition Cost	Steel Bld. Large	02220 110 0012	0.26	/CF	100	45	10								FT		45000	CF	11700
	Structure's Vol. Demolished																0.01	17	CY	
	Rubble's Weight (exclude steel)																			
	Truck's Capacity																			
	Haulage																			
	Transportation Cost Non Steel Truck																			
	Transportation Cost Non Steel Drive																			
	Disposal Cost Non Steel	ECDC	ECDC	35	/TON						17					CY		17	CY	595
	Steel's Weight																			
	Truck's Capacity																			
	Haulage																			
	Transportation Cost Steel Truck																			
	Transportation Cost Steel Truck Drive																			
	Disposal Cost Steel																			
	Subtotal																			12295
	Equipment 's Disposal Cost	Chain link remove 8'-10'	02220 220 1700	3.05	/LF	240										LF		240	LF	732
	Dismantling Cost																			
	Equipment 's Vol. Demolished																			
	Loading Costs																			
	Transport Costs																			
	Disposal Costs																			
	Subtotal																			732
	Concrete Demolition																			
	Demolition Cost	Concrete demolition	ConcreteDemo1	6.81	/CY	100	45	0.5								FT		83	CY	565
	Concrete's Vol. Demolished																1.3	108	CY	
	Loading Cost	Front end loader 3 CY	02315 424 1300	1.43	/CY													108	CY	154
	Transportation Cost	12 CY (16 Ton) Dump Truck 1/2 mi. md. trip	02315 490 0320	3.49	/CY													108	CY	377
	Disposal Costs	On site disposal	02220 240 5550	7.75	/CY													108	CY	837
	Subtotal																			1933
	Concrete Demolition																			
	Demolition Cost																			
	Concrete's Vol. Demolished																			
	Loading Cost																			
	Transportation Cost																			
	Disposal Costs																			
	Subtotal																			
	Concrete Demolition																			
	Demolition Cost																			
	Concrete's Vol. Demolished																			
	Loading Cost																			
	Transportation Cost																			
	Disposal Costs																			
	Subtotal																			
	Total																			14960

Ref.	Description	Materials	Means Reference Number	Unit Cost	Unit	Length	Width	Height	Diameter	Area	Volume	Weight	Density	Time	Number	Unit	Swell Factor	Quantity	Unit	Cost
	Scale House 02																			
	Structure's Demolition Cost	Steel Bld. Large	02220 110 0012	0.26	/CF	12	12	8								FT		1152	CF	300
	Structure's Vol. Demolished																0.01	0	CY	
	Rubble's Weight (exclude steel)																			
	Truck's Capacity																			
	Haulage																			
	Transportation Cost Non Steel Truck																			
	Transportation Cost Non Steel Drive																			
	Disposal Cost Non Steel	ECDC	ECDC	35	/TON						0					CY		0	CY	
	Steel's Weight																			
	Truck's Capacity																			
	Haulage																			
	Transportation Cost Steel Truck																			
	Transportation Cost Steel Truck Drive																			
	Disposal Cost Steel																			
	Subtotal																			300
	Structure's Demolition Cost	Steel Bld. Large	02220 110 0012	0.26	/CF	75	15	3								FT		3375	CF	878
	Structure's Vol. Demolished																0.01	1	CY	
	Rubble's Weight (exclude steel)																			
	Truck's Capacity																			
	Haulage																			
	Transportation Cost Non Steel Truck																			
	Transportation Cost Non Steel Drive																			
	Disposal Cost Non Steel	ECDC	ECDC	35	/TON						1					CY		1	CY	35
	Steel's Weight																			
	Truck's Capacity																			
	Haulage																			
	Transportation Cost Steel Truck																			
	Transportation Cost Steel Truck Drive																			
	Disposal Cost Steel																			
	Subtotal																			913
	Equipment 's Disposal Cost																			
	Dismantling Cost																			
	Equipment 's Vol. Demolished																			
	Loading Costs																			
	Transport Costs																			
	Disposal Costs																			
	Subtotal																			
	Footer's Demolition																			
	Demolition Cost	Concrete demolition	ConcreteDemo1	6.81	/CY						15					CY		15	CY	102
	Footer's Vol. Demolished																1.3	20	CY	
	Loading Cost	Front end loader 3 CY	02315 424 1300	1.43	/CY													20	CY	29
	Transportation Cost	12 CY (16 Ton) Dump Truck 1/2 mi. md. trip	02315 490 0320	3.49	/CY													20	CY	70
	Disposal Costs	On site disposal	02220 240 5550	7.75	/CY													20	CY	155
	Subtotal																			356
	Total																			1569

Ref.	Description	Materials	Means Reference Number	Unit Cost	Unit	Length	Width	Height	Diameter	Area	Volume	Weight	Density	Time	Number	Unit	Swell Factor	Quantity	Unit	Cost
	No 1 Truck Dump 03																			
	Structure's Demolition Cost	Steel Bld. Large	02220 110 0012	0.26	/CF	16	16	22								FT		5632	CF	1464
	Structure's Vol. Demolished																0.01	2	CY	
	Rubble's Weight (exclude steel)																			
	Truck's Capacity																			
	Haulage																			
	Transportation Cost Non Steel Truck																			
	Transportation Cost Non Steel Drive																			
	Disposal Cost Non Steel	ECDC	ECDC	35	/TON						2					CY		2	CY	70
	Subtotal																			1534
	No. 2 Truck Dump	Steel Bld. Large	02220 110 0012	0.26	/CF	16	6	8								FT		768	CF	200
	Structure's Demolition Cost																0.01	1	CY	
	Structure's Vol. Demolished																			
	Rubble's Weight (exclude steel)																			
	Truck's Capacity																			
	Haulage																			
	Transportation Cost Non Steel Truck																			
	Transportation Cost Non Steel Drive																			
	Disposal Cost Non Steel	ECDC	ECDC	35	/TON						1					CY		1	CY	35
	Subtotal																			235
	No. 2 Truck Dump	Steel Bld. Large	02220 110 0012	0.26	/CF	200	30	1								FT		6000	CF	1560
	Structure's Demolition Cost																0.01	2	CY	
	Structure's Vol. Demolished																			
	Rubble's Weight (exclude steel)																			
	Truck's Capacity																			
	Haulage																			
	Transportation Cost Non Steel Truck																			
	Transportation Cost Non Steel Drive																			
	Disposal Cost Non Steel	ECDC	ECDC	35	/TON						2					CY		2	CY	70
	Subtotal																			1630
	Footer's Demolition																			
	Demolition Cost	Concrete demolition	ConcreteDemo1	6.81	/CY	30	40	1								FT		44	CY	300
	Footer's Vol. Demolished																1.3	57	CY	
	Loading Cost	Front end loader 3 CY	02315 424 1300	1.43	/CY													57	CY	82
	Transportation Cost	12 CY (16 Ton) Dump Truck 1/2 mi. md. trip	02315 490 0320	3.49	/CY													57	CY	199
	Disposal Costs	On site disposal	02220 240 5550	7.6	/CY													57	CY	433
	Subtotal																			1014
	Total																			4413

Ref.	Description	Materials	Means Reference Number	Unit Cost	Unit	Length	Width	Height	Diameter	Area	Volume	Weight	Density	Time	Number	Unit	Swell Factor	Quantity	Unit	Cost
	No 2 Truck Dump 04																			
	Structure's Demolition Cost	Steel Bld. Large	02220 110 0012	0.26	/CF	16	16	22								FT		5632	CF	1464
	Structure's Vol. Demolished																0.01	2	CY	
	Rubble's Weight (exclude steel)																			
	Truck's Capacity																			
	Haulage																			
	Transportation Cost Non Steel Truck																			
	Transportation Cost Non Steel Drive																			
	Disposal Cost Non Steel	ECDC	ECDC	35	/TON						2					CY		2	CY	70
	Steel's Weight																			
	Truck's Capacity																			
	Haulage																			
	Transportation Cost Steel Truck																			
	Transportation Cost Steel Truck Drive																			
	Disposal Cost Steel																			
	Subtotal																			1534
	Equipment 's Disposal Cost																			
	Dismantling Cost																			
	Equipment 's Vol. Demolished																			
	Loading Costs																			
	Transport Costs																			
	Disposal Costs																			
	Subtotal																			
	Footer's Demolition																			
	Demolition Cost	Concrete demolition	ConcreteDemo1	6.81	/CY	120	8	1								FT		36	CY	245
	Footer's Vol. Demolished																1.3	47	CY	
	Loading Cost	Front end loader 3 CY	02315 424 1300	1.43	/CY													47	CY	67
	Transportation Cost	12 CY (16 Ton) Dump Truck 1/2 mi. rnd. trip	02315 490 0320	3.49	/CY													47	CY	164
	Disposal Costs	On site disposal	02220 240 5550	7.75	/CY													47	CY	364
	Subtotal																			840
	Concrete Demolition																			
	Demolition Cost																			
	Concrete's Vol. Demolished																			
	Loading Cost																			
	Transportation Cost																			
	Disposal Costs																			
	Subtotal																			
	Concrete Demolition																			
	Demolition Cost																			
	Concrete's Vol. Demolished																			
	Loading Cost																			
	Transportation Cost																			
	Disposal Costs																			
	Subtotal																			
	Total																			2374

Ref.	Description	Materials	Means Reference Number	Unit Cost	Unit	Length	Width	Height	Diameter	Area	Volume	Weight	Density	Time	Number	Unit	Swell Factor	Quantity	Unit	Cost
	No 3 Truck Dump 05																			
	Structure's Demolition Cost	Steel Bld. Large	02220 110 0012	0.26	/CF	14	14	20								FT		3920	CF	1019
	Structure's Vol. Demolished																0.01	1	CY	
	Rubble's Weight (exclude steel)																			
	Truck's Capacity																			
	Haulage																			
	Transportation Cost Non Steel Truck																			
	Transportation Cost Non Steel Drive																			
	Disposal Cost Non Steel	ECDC	ECDC	35	/TON						1					CY		1	CY	35
	Steel's Weight																			
	Truck's Capacity																			
	Haulage																			
	Transportation Cost Steel Truck																			
	Transportation Cost Steel Truck Drive																			
	Disposal Cost Steel																			
	Subtotal																			1054
	Equipment 's Disposal Cost																			
	Dismantling Cost																			
	Equipment 's Vol. Demolished																			
	Loading Costs																			
	Transport Costs																			
	Disposal Costs																			
	Subtotal																			
	Footer's Demolition																			
	Demolition Cost	Concrete demolition	ConcreteDemo1	6.81	/CY	20	20	1								FT		15	CY	102
	Footer's Vol. Demolished																1.3	20	CY	
	Loading Cost	Front end loader 3 CY	02315 424 1300	1.43	/CY													20	CY	29
	Transportation Cost	12 CY (16 Ton) Dump Truck 1/2 mi. md. trip	02315 490 0320	3.49	/CY													20	CY	70
	Disposal Costs	On site disposal	02220 240 5550	7.75	/CY													20	CY	155
	Subtotal																			356
	Concrete Demolition																			
	Demolition Cost																			
	Concrete's Vol. Demolished																			
	Loading Cost																			
	Transportation Cost																			
	Disposal Costs																			
	Subtotal																			
	Concrete Demolition																			
	Demolition Cost																			
	Concrete's Vol. Demolished																			
	Loading Cost																			
	Transportation Cost																			
	Disposal Costs																			
	Subtotal																			
	Total																			1410

Ref.	Description	Materials	Means Reference Number	Unit Cost	Unit	Length	Width	Height	Diameter	Area	Volume	Weight	Density	Time	Number	Unit	Swell Factor	Quantity	Unit	Cost
	No 4 Truck Dump 06																			
	Structure's Demolition Cost	Steel Bld. Large	02220 110 0012	0.26	/CF	16	16	20								FT		5120	CF	1331
	Structure's Vol. Demolished																0.01	2	CY	
	Rubble's Weight (exclude steel)																			
	Truck's Capacity																			
	Haulage																			
	Transportation Cost Non Steel Truck																			
	Transportation Cost Non Steel Drive																			
	Disposal Cost Non Steel	ECDC	ECDC	35	/TON						2					CY		2	CY	70
	Steel's Weight																			
	Truck's Capacity																			
	Haulage																			
	Transportation Cost Steel Truck																			
	Transportation Cost Steel Truck Drive																			
	Disposal Cost Steel																			
	Subtotal																			1401
	Equipment 's Disposal Cost																			
	Dismantling Cost																			
	Equipment 's Vol. Demolished																			
	Loading Costs																			
	Transport Costs																			
	Disposal Costs																			
	Subtotal																			
	Footer's Demolition																			
	Demolition Cost	Concrete demolition	ConcreteDemo1	6.81	/CY	48	4	2								FT		14	CY	95
	Footer's Vol. Demolished																1.3	18	CY	
	Loading Cost	Front end loader 3 CY	02315 424 1300	1.43	/CY													18	CY	26
	Transportation Cost	12 CY (16 Ton) Dump Truck 1/2 mi. rnd. trip	02315 490 0320	3.49	/CY													18	CY	63
	Disposal Costs	On site disposal	02220 240 5550	7.75	/CY													18	CY	140
	Subtotal																			324
	Concrete Demolition																			
	Demolition Cost																			
	Concrete's Vol. Demolished																			
	Loading Cost																			
	Transportation Cost																			
	Disposal Costs																			
	Subtotal																			
	Concrete Demolition																			
	Demolition Cost																			
	Concrete's Vol. Demolished																			
	Loading Cost																			
	Transportation Cost																			
	Disposal Costs																			
	Subtotal																			
	Total																			1725

Ref.	Description	Materials	Means Reference Number	Unit Cost	Unit	Length	Width	Height	Diameter	Area	Volume	Weight	Density	Time	Number	Unit	Swell Factor	Quantity	Unit	Cost
	No 5 Truck Dump 07																			
	Structure's Demolition Cost	Steel Bld. Large	02220 110 0012	0.26	/CF	30	14	8								FT		3360	CF	874
	Structure's Vol. Demolished																0.01	1	CY	
	Rubble's Weight (exclude steel)																			
	Truck's Capacity																			
	Haulage																			
	Transportation Cost Non Steel Truck																			
	Transportation Cost Non Steel Drive																			
	Disposal Cost Non Steel	ECDC	ECDC	35	/TON						1					CY		1	CY	35
	Steel's Weight																			
	Truck's Capacity																			
	Haulage																			
	Transportation Cost Steel Truck																			
	Transportation Cost Steel Truck Drive																			
	Disposal Cost Steel																			
	Subtotal																			909
	Equipment's Disposal Cost																			
	Dismantling Cost																			
	Equipment's Vol. Demolished																			
	Loading Costs																			
	Transport Costs																			
	Disposal Costs																			
	Subtotal																			
	Footer's Demolition																			
	Demolition Cost	Concrete demolition	ConcreteDemo1	6.81	/CY	10	15	1								FT		6	CY	41
	Footer's Vol. Demolished																1.3	8	CY	
	Loading Cost	Front end loader 3 CY	02315 424 1300	1.43	/CY													8	CY	11
	Transportation Cost	12 CY (16 Ton) Dump Truck 1/2 mi. rnd. trip	02315 490 0320	3.49	/CY													8	CY	28
	Disposal Costs	On site disposal	02220 240 5550	7.75	/CY													8	CY	62
	Subtotal																			142
	Concrete Demolition																			
	Demolition Cost																			
	Concrete's Vol. Demolished																			
	Loading Cost																			
	Transportation Cost																			
	Disposal Costs																			
	Subtotal																			
	Concrete Demolition																			
	Demolition Cost																			
	Concrete's Vol. Demolished																			
	Loading Cost																			
	Transportation Cost																			
	Disposal Costs																			
	Subtotal																			
	Total																			1051

Ref.	Description	Materials	Means Reference Number	Unit Cost	Unit	Length	Width	Height	Diameter	Area	Volume	Weight	Density	Time	Number	Unit	Swell Factor	Quantity	Unit	Cost
	Conveyors Eight 08																			
	Structure's Demolition Cost	Steel Bld. Large	02220 110 0012	0.26	/CF	1980	4	4								FT		31680	CF	8237
	Structure's Vol. Demolished																0.01	12	CY	
	Rubble's Weight (exclude steel)																			
	Truck's Capacity																			
	Haulage																			
	Transportation Cost Non Steel Truck																			
	Transportation Cost Non Steel Drive																			
	Disposal Cost Non Steel	ECDC	ECDC	35	/TON						12					CY		12	CY	420
	Steel's Weight																			
	Truck's Capacity																			
	Haulage																			
	Transportation Cost Steel Truck																			
	Transportation Cost Steel Truck Drive																			
	Disposal Cost Steel																			
	Subtotal																			8657
	Equipment 's Disposal Cost																			
	Dismantling Cost																			
	Equipment 's Vol. Demolished																			
	Loading Costs																			
	Transport Costs																			
	Disposal Costs																			
	Subtotal																			
	Concrete Demolition																			
	Demolition Cost																			
	Concrete's Vol. Demolished																			
	Loading Cost																			
	Transportation Cost																			
	Disposal Costs																			
	Subtotal																			
	Concrete Demolition																			
	Demolition Cost																			
	Concrete's Vol. Demolished																			
	Loading Cost																			
	Transportation Cost																			
	Disposal Costs																			
	Subtotal																			
	Concrete Demolition																			
	Demolition Cost																			
	Concrete's Vol. Demolished																			
	Loading Cost																			
	Transportation Cost																			
	Disposal Costs																			
	Subtotal																			
	Total																			8657

Ref.	Description	Materials	Means Reference Number	Unit Cost	Unit	Length	Width	Height	Diameter	Area	Volume	Weight	Density	Time	Number	Unit	Swell Factor	Quantity	Unit	Cost
	Conveyor 48 inch 09																			
	Structure's Demolition Cost	Steel Bld. Large	02220 110 0012	0.26	/CF	1980	4	4								FT		31680	CF	8237
	Structure's Vol. Demolished																0.01	12	CY	
	Rubble's Weight (exclude steel)																			
	Truck's Capacity																			
	Haulage																			
	Transportation Cost Non Steel Truck																			
	Transportation Cost Non Steel Drive																			
	Disposal Cost Non Steel	ECDC	ECDC	35	/TON						12					CY		12	CY	420
	Steel's Weight																			
	Truck's Capacity																			
	Haulage																			
	Transportation Cost Steel Truck																			
	Transportation Cost Steel Truck Drive																			
	Disposal Cost Steel																			
	Subtotal																			8657
	Equipment 's Disposal Cost																			
	Dismantling Cost																			
	Equipment 's Vol. Demolished																			
	Loading Costs																			
	Transport Costs																			
	Disposal Costs																			
	Subtotal																			
	Floor Demolition																			
	Demolition Cost	Concrete demolition	ConcreteDemo1	6.81	/CY	10	15	1								FT		0	CY	0
	Floor's Vol. Demolished																1.3	0	CY	
	Loading Cost	Front end loader 3 CY	02315 424 1300	1.43	/CY													0	CY	0
	Transportation Cost	12 CY (16 Ton) Dump Truck 1/2 mi. rnd. trip	02315 490 0320	3.49	/CY													0	CY	0
	Disposal Costs	On site disposal	02220 240 5550	7.75	/CY													0	CY	0
	Subtotal																			0
	Concrete Demolition																			
	Demolition Cost																			
	Concrete's Vol. Demolished																			
	Loading Cost																			
	Transportation Cost																			
	Disposal Costs																			
	Subtotal																			
	Concrete Demolition																			
	Demolition Cost																			
	Concrete's Vol. Demolished																			
	Loading Cost																			
	Transportation Cost																			
	Disposal Costs																			
	Subtotal																			
	Total																			8657

Ref.	Description	Materials	Means Reference Number	Unit Cost	Unit	Length	Width	Height	Diameter	Area	Volume	Weight	Density	Time	Number	Unit	Swell Factor	Quantity	Unit	Cost
	No 4 Radial Stacker 10																			
	Structure's Demolition Cost	Steel Bld. Large	02220 110 0012	0.26	/CF	200	8	8								FT		12800	CF	3328
	Structure's Vol. Demolished																0.01	5	CY	
	Rubble's Weight (exclude steel)																			
	Truck's Capacity																			
	Haulage																			
	Transportation Cost Non Steel Truck																			
	Transportation Cost Non Steel Drive																			
	Disposal Cost Non Steel	ECDC	ECDC	35	/TON						5					CY		5	CY	175
	Steel's Weight																			
	Truck's Capacity																			
	Haulage																			
	Transportation Cost Steel Truck																			
	Transportation Cost Steel Truck Drive																			
	Disposal Cost Steel																			
	Subtotal																			3503
	Equipment 's Disposal Cost																			
	Dismantling Cost																			
	Equipment 's Vol. Demolished																			
	Loading Costs																			
	Transport Costs																			
	Disposal Costs																			
	Subtotal																			
	Floor Demolition																			
	Demolition Cost	Concrete demolition	ConcreteDemo1	6.81	/CY	10	15	1								FT		0	CY	0
	Floor's Vol. Demolished																1.3	0	CY	
	Loading Cost	Front end loader 3 CY	02315 424 1300	1.43	/CY													0	CY	0
	Transportation Cost	12 CY (16 Ton) Dump Truck 1/2 mi. md. trip	02315 490 0320	3.49	/CY													0	CY	0
	Disposal Costs	On site disposal	02220 240 5550	7.75	/CY													0	CY	0
	Subtotal																			0
	Concrete Demolition																			
	Demolition Cost																			
	Concrete's Vol. Demolished																			
	Loading Cost																			
	Transportation Cost																			
	Disposal Costs																			
	Subtotal																			
	Concrete Demolition																			
	Demolition Cost																			
	Concrete's Vol. Demolished																			
	Loading Cost																			
	Transportation Cost																			
	Disposal Costs																			
	Subtotal																			
	Total																			3503

Ref.	Description	Materials	Means Reference Number	Unit Cost	Unit	Length	Width	Height	Diameter	Area	Volume	Weight	Density	Time	Number	Unit	Swell Factor	Quantity	Unit	Cost
	No 5 Radial Stacker 11																			
	Structure's Demolition Cost	Steel Bld. Large	02220 110 0012	0.26	/CF	100	6	6								FT		3600	CF	936
	Structure's Vol. Demolished																0.01	1	CY	
	Rubble's Weight (exclude steel)																			
	Truck's Capacity																			
	Haulage																			
	Transportation Cost Non Steel Truck																			
	Transportation Cost Non Steel Drive																			
	Disposal Cost Non Steel	ECDC	ECDC	35	/TON						1					CY		1	CY	35
	Steel's Weight																			
	Truck's Capacity																			
	Haulage																			
	Transportation Cost Steel Truck																			
	Transportation Cost Steel Truck Drive																			
	Disposal Cost Steel																			
	Subtotal																			971
	Equipment 's Disposal Cost																			
	Dismantling Cost																			
	Equipment 's Vol. Demolished																			
	Loading Costs																			
	Transport Costs																			
	Disposal Costs																			
	Subtotal																			
	Floor Demolition																			
	Demolition Cost	Concrete demolition	ConcreteDemo1	6.81	/CY	0	0	0								FT		0	CY	0
	Floor's Vol. Demolished																1.3	0	CY	
	Loading Cost	Front end loader 3 CY	02315 424 1300	1.43	/CY													0	CY	0
	Transportation Cost	12 CY (16 Ton) Dump Truck 1/2 mi. md. trip	02315 490 0320	3.49	/CY													0	CY	0
	Disposal Costs	On site disposal	02220 240 5550	7.75	/CY													0	CY	0
	Subtotal																			0
	Concrete Demolition																			
	Demolition Cost																			
	Concrete's Vol. Demolished																			
	Loading Cost																			
	Transportation Cost																			
	Disposal Costs																			
	Subtotal																			
	Concrete Demolition																			
	Demolition Cost																			
	Concrete's Vol. Demolished																			
	Loading Cost																			
	Transportation Cost																			
	Disposal Costs																			
	Subtotal																			
	Total																			971

Ref.	Description	Materials	Means Reference Number	Unit Cost	Unit	Length	Width	Height	Diameter	Area	Volume	Weight	Density	Time	Number	Unit	Swell Factor	Quantity	Unit	Cost
	Conveyor Piers 12																			
	Structure's Demolition Cost	Steel Bld. Large	02220 110 0012	0.26	/CF	0	0	0								FT		0	CF	0
	Structure's Vol. Demolished																0.01	0	CY	
	Rubble's Weight (exclude steel)																			
	Truck's Capacity																			
	Haulage																			
	Transportation Cost Non Steel Truck																			
	Transportation Cost Non Steel Drive																			
	Disposal Cost Non Steel	ECDC	ECDC	35	/TON						0					CY		0	CY	0
	Steel's Weight																			
	Truck's Capacity																			
	Haulage																			
	Transportation Cost Steel Truck																			
	Transportation Cost Steel Truck Drive																			
	Disposal Cost Steel																			
	Subtotal																			0
	Equipment 's Disposal Cost																			
	Dismantling Cost																			
	Equipment 's Vol. Demolished																			
	Loading Costs																			
	Transport Costs																			
	Disposal Costs																			
	Subtotal																			
	Floor Demolition																			
	Demolition Cost	Concrete demolition	ConcreteDemo1	6.81	/CY	3	3	6							40	FT		80	CY	545
	Floor's Vol. Demolished																1.3	104	CY	
	Loading Cost	Front end loader 3 CY	02315 424 1300	1.43	/CY													104	CY	149
	Transportation Cost	12 CY (16 Ton) Dump Truck 1/2 mi. rnd. trip	02315 490 0320	3.49	/CY													104	CY	363
	Disposal Costs	On site disposal	02220 240 5550	7.75	/CY													104	CY	806
	Subtotal																			1863
	Concrete Demolition																			
	Demolition Cost																			
	Concrete's Vol. Demolished																			
	Loading Cost																			
	Transportation Cost																			
	Disposal Costs																			
	Subtotal																			
	Concrete Demolition																			
	Demolition Cost																			
	Concrete's Vol. Demolished																			
	Loading Cost																			
	Transportation Cost																			
	Disposal Costs																			
	Subtotal																			
	Total																			1863

Ref.	Description	Materials	Means Reference Number	Unit Cost	Unit	Length	Width	Height	Diameter	Area	Volume	Weight	Density	Time	Number	Unit	Swell Factor	Quantity	Unit	Cost
	Support Structure 13																			
	Structure's Demolition Cost	Steel Bld. Large	02220 110 0012	0.26	/CF	300	1	1							18	FT		5400	CF	1404
	Structure's Vol. Demolished																0.01	2	CY	
	Rubble's Weight (exclude steel)																			
	Truck's Capacity																			
	Haulage																			
	Transportation Cost Non Steel Truck																			
	Transportation Cost Non Steel Drive																			
	Disposal Cost Non Steel	ECDC	ECDC	35	/TON						2					CY		2	CY	70
	Steel's Weight																			
	Truck's Capacity																			
	Haulage																			
	Transportation Cost Steel Truck																			
	Transportation Cost Steel Truck Drive																			
	Disposal Cost Steel																			
	Subtotal																			1474
	Equipment 's Disposal Cost																			
	Dismantling Cost																			
	Equipment 's Vol. Demolished																			
	Loading Costs																			
	Transport Costs																			
	Disposal Costs																			
	Subtotal																			
	Floor Demolition																			
	Demolition Cost	Concrete demolition	ConcreteDemo1	6.81	/CY	0	0	0							0	FT		0	CY	0
	Floor's Vol. Demolished																1.3	0	CY	
	Loading Cost	Front end loader 3 CY	02315 424 1300	1.43	/CY													0	CY	0
	Transportation Cost	12 CY (16 Ton) Dump Truck 1/2 mi. md. trip	02315 490 0320	3.49	/CY													0	CY	0
	Disposal Costs	On site disposal	02220 240 5550	7.75	/CY													0	CY	0
	Subtotal																			0
	Concrete Demolition																			
	Demolition Cost																			
	Concrete's Vol. Demolished																			
	Loading Cost																			
	Transportation Cost																			
	Disposal Costs																			
	Subtotal																			
	Concrete Demolition																			
	Demolition Cost																			
	Concrete's Vol. Demolished																			
	Loading Cost																			
	Transportation Cost																			
	Disposal Costs																			
	Subtotal																			
	Total																			1474

Ref.	Description	Materials	Means Reference Number	Unit Cost	Unit	Length	Width	Height	Diameter	Area	Volume	Weight	Density	Time	Number	Unit	Swell Factor	Quantity	Unit	Cost
	Reclaim Tunnel 15																			
	Structure's Demolition Cost	Steel Bld. Large	02220 110 0012	0.26	/CF	1040	14	8								FT		116480	CF	30285
	Structure's Vol. Demolished																0.01	43	CY	
	Rubble's Weight (exclude steel)																			
	Truck's Capacity																			
	Haulage																			
	Transportation Cost Non Steel Truck																			
	Transportation Cost Non Steel Drive																			
	Disposal Cost Non Steel	ECDC	ECDC	35	/TON						43					CY		43	CY	1505
	Steel's Weight																			
	Truck's Capacity																			
	Haulage																			
	Transportation Cost Steel Truck																			
	Transportation Cost Steel Truck Drive																			
	Disposal Cost Steel																			
	Subtotal																			31790
	Escape Tunnel																			
	Structure's Demolition Cost	Steel Bld. Large	02220 110 0012	0.26	/CF			160	4							FT		2011	CF	523
	Structure's Vol. Demolished																0.01	1	CY	
	Rubble's Weight (exclude steel)																			
	Truck's Capacity																			
	Haulage																			
	Transportation Cost Non Steel Truck																			
	Transportation Cost Non Steel Drive																			
	Disposal Cost Non Steel	ECDC	ECDC	35	/TON						1					CY		1	CY	35
	Steel's Weight																			
	Truck's Capacity																			
	Haulage																			
	Transportation Cost Steel Truck																			
	Transportation Cost Steel Truck Drive																			
	Disposal Cost Steel																			
	Subtotal																			558
	Reclaim Tunnel 15																			
	Structure's Demolition Cost	Steel Bld. Large	02220 110 0012	0.26	/CF	4	4	4							2	FT		128	CF	33
	Structure's Vol. Demolished																0.01	0	CY	
	Rubble's Weight (exclude steel)																			
	Truck's Capacity																			
	Haulage																			
	Transportation Cost Non Steel Truck																			
	Transportation Cost Non Steel Drive																			
	Disposal Cost Non Steel	ECDC	ECDC	35	/TON						0					CY		0	CY	0
	Steel's Weight																			
	Truck's Capacity																			
	Haulage																			
	Transportation Cost Steel Truck																			
	Transportation Cost Steel Truck Drive																			
	Disposal Cost Steel																			
	Subtotal																			33
	Escape Tunnel																			
	Structure's Demolition Cost	Steel Bld. Large	02220 110 0012	0.26	/CF	8	8	8								FT		512	CF	133
	Structure's Vol. Demolished																0.01	0	CY	
	Rubble's Weight (exclude steel)																			
	Truck's Capacity																			
	Haulage																			
	Transportation Cost Non Steel Truck																			
	Transportation Cost Non Steel Drive																			
	Disposal Cost Non Steel	ECDC	ECDC	35	/TON						0					CY		0	CY	0
	Steel's Weight																			
	Truck's Capacity																			
	Haulage																			
	Transportation Cost Steel Truck																			
	Transportation Cost Steel Truck Drive																			
	Disposal Cost Steel																			
	Subtotal																			133
	Total																			32614

Ref.	Description	Materials	Means Reference Number	Unit Cost	Unit	Length	Width	Height	Diameter	Area	Volume	Weight	Density	Time	Number	Unit	Swell Factor	Quantity	Unit	Cost
	Water Tank 14																			
	Structure's Demolition Cost	Steel Bld. Large	02220 110 0012	0.26	/CF						21390					CF		21390	CF	5561
	Structure's Vol. Demolished																0.01	8	CY	
	Rubble's Weight (exclude steel)																			
	Truck's Capacity																			
	Haulage																			
	Transportation Cost Non Steel Truck																			
	Transportation Cost Non Steel Drive																			
	Disposal Cost Non Steel	ECDC	ECDC	35	/TON						8					CY		8	CY	280
	Steel's Weight																			
	Truck's Capacity																			
	Haulage																			
	Transportation Cost Steel Truck																			
	Transportation Cost Steel Truck Drive																			
	Disposal Cost Steel																			
	Subtotal																			5841
	Equipment 's Disposal Cost																			
	Dismantling Cost																			
	Equipment 's Vol. Demolished																			
	Loading Costs																			
	Transport Costs																			
	Disposal Costs																			
	Subtotal																			
	Floor Demolition																			
	Demolition Cost	Concrete demolition	ConcreteDemo1	6.81	/CY						90					CY		90	CY	613
	Floor's Vol. Demolished																1.3	117	CY	
	Loading Cost	Front end loader 3 CY	02315 424 1300	1.43	/CY													117	CY	167
	Transportation Cost	12 CY (16 Ton) Dump Truck 1/2 mi. rnd. trip	02315 490 0320	3.49	/CY													117	CY	408
	Disposal Costs	On site disposal	02220 240 5550	7.75	/CY													117	CY	907
	Subtotal																			2095
	Concrete Demolition																			
	Demolition Cost																			
	Concrete's Vol. Demolished																			
	Loading Cost																			
	Transportation Cost																			
	Disposal Costs																			
	Subtotal																			
	Concrete Demolition																			
	Demolition Cost																			
	Concrete's Vol. Demolished																			
	Loading Cost																			
	Transportation Cost																			
	Disposal Costs																			
	Subtotal																			
	Total																			7936

Ref.	Description	Materials	Means Reference Number	Unit Cost	Unit	Length	Width	Height	Diameter	Area	Volume	Weight	Density	Time	Number	Unit	Swell Factor	Quantity	Unit	Cost
	Portable Hopper 16																			
	Structure's Demolition Cost	Steel Bld. Large	02220 110 0012	0.26	/CF	20	12	14								FT		3360	CF	874
	Structure's Vol. Demolished																0.01	1	CY	
	Rubble's Weight (exclude steel)																			
	Truck's Capacity																			
	Haulage																			
	Transportation Cost Non Steel Truck																			
	Transportation Cost Non Steel Drive																			
	Disposal Cost Non Steel	ECDC	ECDC	35	/TON						1					CY		1	CY	35
	Steel's Weight																			
	Truck's Capacity																			
	Haulage																			
	Transportation Cost Steel Truck																			
	Transportation Cost Steel Truck Drive																			
	Disposal Cost Steel																			
	Subtotal																			909
	Equipment 's Disposal Cost																			
	Dismantling Cost																			
	Equipment 's Vol. Demolished																			
	Loading Costs																			
	Transport Costs																			
	Disposal Costs																			
	Subtotal																			
	Pad's Demolition																			
	Demolition Cost	Concrete demolition	ConcreteDemo1	6.81	/CY	0	0	0								FT		0	CY	0
	Pad's Vol. Demolished																1.3	0	CY	
	Loading Cost	Front end loader 3 CY	02315 424 1300	1.43	/CY													0	CY	0
	Transportation Cost	12 CY (16 Ton) Dump Truck 1/2 mi. md. trip	02315 490 0320	3.49	/CY													0	CY	0
	Disposal Costs	On site disposal	02220 240 5550	7.75	/CY													0	CY	0
	Subtotal																			0
	Concrete Demolition																			
	Demolition Cost																			
	Concrete's Vol. Demolished																			
	Loading Cost																			
	Transportation Cost																			
	Disposal Costs																			
	Subtotal																			
	Concrete Demolition																			
	Demolition Cost																			
	Concrete's Vol. Demolished																			
	Loading Cost																			
	Transportation Cost																			
	Disposal Costs																			
	Subtotal																			
	Total																			909

Ref.	Description	Materials	Means Reference Number	Unit Cost	Unit	Length	Width	Height	Diameter	Area	Volume	Weight	Density	Time	Number	Unit	Swell Factor	Quantity	Unit	Cost
	Trailer 17																			
	Structure's Demolition Cost	Steel Bld. Large	02220 110 0012	0.26	/CF	30	8	8								FT		1920	CF	499
	Structure's Vol. Demolished																0.01	1	CY	
	Rubble's Weight (exclude steel)																			
	Truck's Capacity																			
	Haulage																			
	Transportation Cost Non Steel Truck																			
	Transportation Cost Non Steel Drive																			
	Disposal Cost Non Steel	ECDC	ECDC	35	/TON						25					CY		25	CY	875
	Steel's Weight																			
	Truck's Capacity																			
	Haulage																			
	Transportation Cost Steel Truck																			
	Transportation Cost Steel Truck Drive																			
	Disposal Cost Steel																			
	Subtotal																			1374
	Equipment 's Disposal Cost																			
	Dismantling Cost																			
	Equipment 's Vol. Demolished																			
	Loading Costs																			
	Transport Costs																			
	Disposal Costs																			
	Subtotal																			
	Concrete Demolition																			
	Demolition Cost																			
	Concrete's Vol. Demolished																			
	Loading Cost																			
	Transportation Cost																			
	Disposal Costs																			
	Subtotal																			
	Concrete Demolition																			
	Demolition Cost																			
	Concrete's Vol. Demolished																			
	Loading Cost																			
	Transportation Cost																			
	Disposal Costs																			
	Subtotal																			
	Concrete Demolition																			
	Demolition Cost																			
	Concrete's Vol. Demolished																			
	Loading Cost																			
	Transportation Cost																			
	Disposal Costs																			
	Subtotal																			
	Total																			1374

Ref.	Description	Materials	Means Reference Number	Unit Cost	Unit	Length	Width	Height	Diameter	Area	Volume	Weight	Density	Time	Number	Unit	Swell Factor	Quantity	Unit	Cost
	Transfer Bin 18																			
	Structure's Demolition Cost	Steel Bld. Large	02220 110 0012	0.26	/CF			30	16							FT		6032	CF	1568
	Structure's Vol. Demolished																0.01	2	CY	
	Rubble's Weight (exclude steel)																			
	Truck's Capacity																			
	Haulage																			
	Transportation Cost Non Steel Truck																			
	Transportation Cost Non Steel Drive																			
	Disposal Cost Non Steel	ECDC	ECDC	35	/TON						2					CY		2	CY	70
	Steel's Weight																			
	Truck's Capacity																			
	Haulage																			
	Transportation Cost Steel Truck																			
	Transportation Cost Steel Truck Drive																			
	Disposal Cost Steel																			
	Subtotal																			1638
	Equipment 's Disposal Cost																			
	Dismantling Cost																			
	Equipment 's Vol. Demolished																			
	Loading Costs																			
	Transport Costs																			
	Disposal Costs																			
	Subtotal																			
	Pad's Demolition																			
	Demolition Cost	Concrete demolition	ConcreteDemo1	6.81	/CY	20	20	1								FT		15	CY	102
	Pad's Vol. Demolished																1.3	20	CY	
	Loading Cost	Front end loader 3 CY	02315 424 1300	1.43	/CY													20	CY	29
	Transportation Cost	12 CY (16 Ton) Dump Truck 1/2 mi. rnd. trip	02315 490 0320	3.49	/CY													20	CY	70
	Disposal Costs	On site disposal	02220 240 5550	7.75	/CY													20	CY	155
	Subtotal																			356
	Concrete Demolition																			
	Demolition Cost																			
	Concrete's Vol. Demolished																			
	Loading Cost																			
	Transportation Cost																			
	Disposal Costs																			
	Subtotal																			
	Concrete Demolition																			
	Demolition Cost																			
	Concrete's Vol. Demolished																			
	Loading Cost																			
	Transportation Cost																			
	Disposal Costs																			
	Subtotal																			
	Total																			1994

Ref.	Description	Materials	Means Reference Number	Unit Cost	Unit	Length	Width	Height	Diameter	Area	Volume	Weight	Density	Time	Number	Unit	Swell Factor	Quantity	Unit	Cost
	Preparation Plant 19																			
	Structure's Demolition Cost	Steel Bld. Large	02220 110 0012	0.26	/CF	110	80	80								FT		704000	CF	183040
	Structure's Vol. Demolished																0.01	261	CY	
	Rubble's Weight (exclude steel)																			
	Truck's Capacity																			
	Haulage																			
	Transportation Cost Non Steel Truck																			
	Transportation Cost Non Steel Drive																			
	Disposal Cost Non Steel	ECDC	ECDC	35	/TON						261					CY		261	CY	9135
	Steel's Weight																			
	Truck's Capacity																			
	Haulage																			
	Transportation Cost Steel Truck																			
	Transportation Cost Steel Truck Drive																			
	Disposal Cost Steel																			
	Subtotal																			192175
	Equipment 's Disposal Cost																			
	Dismantling Cost																			
	Equipment 's Vol. Demolished																			
	Loading Costs																			
	Transport Costs																			
	Disposal Costs																			
	Subtotal																			
	Concrete Demolition																			
	Demolition Cost	Concrete demolition	ConcreteDemo1	6.81	/CY	110	80	1								FT		326	CY	2220
	Concrete's Vol. Demolished																1.3	424	CY	
	Loading Cost	Front end loader 3 CY	02315 424 1300	1.43	/CY													424	CY	606
	Transportation Cost	12 CY (16 Ton) Dump Truck 1/2 mi. md. trip	02315 490 0320	3.49	/CY													424	CY	1480
	Disposal Costs	On site disposal	02220 240 5550	7.75	/CY													424	CY	3286
	Subtotal																			7592
	Pad's Demolition																			
	Demolition Cost	Concrete demolition	ConcreteDemo1	6.81	/CY						75					CY		75	CY	511
	Pad's Vol. Demolished																1.3	98	CY	
	Loading Cost	Front end loader 3 CY	02315 424 1300	1.43	/CY													98	CY	140
	Transportation Cost	12 CY (16 Ton) Dump Truck 1/2 mi. md. trip	02315 490 0320	3.49	/CY													98	CY	342
	Disposal Costs	On site disposal	02220 240 5550	7.75	/CY													98	CY	760
	Subtotal																			1753
	Concrete Demolition																			
	Demolition Cost																			
	Concrete's Vol. Demolished																			
	Loading Cost																			
	Transportation Cost																			
	Disposal Costs																			
	Subtotal																			
	Total																			201520

Ref.	Description	Materials	Means Reference Number	Unit Cost	Unit	Length	Width	Height	Diameter	Area	Volume	Weight	Density	Time	Number	Unit	Swell Factor	Quantity	Unit	Cost
	Substation 20																			
	Structure's Demolition Cost	Steel Bld. Large	02220 110 0012	0.26	/CF	20	27	8								FT		4320	CF	1123
	Structure's Vol. Demolished																0.01	2	CY	
	Rubble's Weight (exclude steel)																			
	Truck's Capacity																			
	Haulage																			
	Transportation Cost Non Steel Truck																			
	Transportation Cost Non Steel Drive																			
	Disposal Cost Non Steel	ECDC	ECDC	35	/TON						64					CY		64	CY	2240
	Steel's Weight																			
	Truck's Capacity																			
	Haulage																			
	Transportation Cost Steel Truck																			
	Transportation Cost Steel Truck Drive																			
	Disposal Cost Steel																			
	Subtotal																			3363
	Transformers 's Disposal Cost	Mechanical equipment heavy	15065 300 3600	850	/ton							2				Ton		2	Ton	1700
	Fence Cost	Chain link remove 8'-10'	02220 220 1700	3.05	/LF	180										FT		180	FT	549
	Equipment 's Vol. Demolished																			
	Loading Costs																			
	Transport Costs																			
	Disposal Costs																			
	Subtotal																			2249
	Concrete Demolition																			
	Demolition Cost	Concrete demolition	ConcreteDemo1	6.81	/CY	20	27	0.5								FT		10	CY	
	Concrete's Vol. Demolished																1.3	13	CY	
	Loading Cost	Front end loader 3 CY	02315 424 1300	1.43	/CY													13	CY	19
	Transportation Cost	12 CY (16 Ton) Dump Truck 1/2 mi. rnd. trip	02315 490 0320	3.49	/CY													13	CY	45
	Disposal Costs	On site disposal	02220 240 5550	7.75	/CY													13	CY	101
	Subtotal																			165
	Concrete Demolition																			
	Demolition Cost																			
	Concrete's Vol. Demolished																			
	Loading Cost																			
	Transportation Cost																			
	Disposal Costs																			
	Subtotal																			
	Concrete Demolition																			
	Demolition Cost																			
	Concrete's Vol. Demolished																			
	Loading Cost																			
	Transportation Cost																			
	Disposal Costs																			
	Subtotal																			
	Total																			5777

Ref.	Description	Materials	Means Reference Number	Unit Cost	Unit	Length	Width	Height	Diameter	Area	Volume	Weight	Density	Time	Number	Unit	Swell Factor	Quantity	Unit	Cost
	Fuel Storage 21																			
	Structure's Demolition Cost	3000 gal. to 5000 gal. tank	02115 200 0110	600	Ea.										2	EA		2	EA	1200
	Structure's Vol. Demolished																			
	Rubble's Weight (exclude steel)																			
	Truck's Capacity																			
	Haulage																			
	Transportation Cost Non Steel Truck																			
	Transportation Cost Non Steel Drive																			
	Disposal Cost Non Steel	ECDC	ECDC	35	/TON						0					CY		0	CY	0
	Steel's Weight																			
	Truck's Capacity																			
	Haulage																			
	Transportation Cost Steel Truck																			
	Transportation Cost Steel Truck Drive																			
	Disposal Cost Steel																			
	Subtotal																			1200
	Trailer																			
	Structure's Demolition Cost	Mixed Materials Bld. Large	02220 110 0100	0.28	/CF	10	50	8								FT		4000	CF	1120
	Structure's Vol. Demolished																0.01	1	CY	
	Rubble's Weight (exclude steel)																			
	Truck's Capacity																			
	Haulage																			
	Transportation Cost Non Steel Truck																			
	Transportation Cost Non Steel Drive																			
	Disposal Cost Non Steel	ECDC	ECDC	35	/TON						1					CY		1	CY	35
	Steel's Weight																			
	Truck's Capacity																			
	Haulage																			
	Transportation Cost Steel Truck																			
	Transportation Cost Steel Truck Drive																			
	Disposal Cost Steel																			
	Subtotal																			1155
	Equipment 's Disposal Cost																			
	Dismantling Cost																			
	Equipment 's Vol. Demolished																			
	Loading Costs																			
	Transport Costs																			
	Disposal Costs																			
	Subtotal																			
	Concrete Demolition																			
	Demolition Cost	Concrete demolition	ConcreteDemo1	6.81	/CY	30	30	0.68							4	FT		91	CY	
	Concrete's Vol. Demolished																1.3	118	CY	
	Loading Cost	Front end loader 3 CY	02315 424 1300	1.43	/CY													118	CY	169
	Transportation Cost	12 CY (16 Ton) Dump Truck 1/2 mi. rnd. trip	02315 490 0320	3.49	/CY													118	CY	412
	Disposal Costs	On site disposal	02220 240 5550	7.75	/CY													118	CY	915
	Subtotal																			1496
	Concrete Demolition																			
	Demolition Cost	Concrete demolition	ConcreteDemo1	6.81	/CY	30	30	0.5								FT		17	CY	
	Concrete's Vol. Demolished																1.3	22	CY	
	Loading Cost	Front end loader 3 CY	02315 424 1300	1.43	/CY													22	CY	31
	Transportation Cost	12 CY (16 Ton) Dump Truck 1/2 mi. rnd. trip	02315 490 0320	3.49	/CY													22	CY	77
	Disposal Costs	On site disposal	02220 240 5550	7.75	/CY													22	CY	171
	Subtotal																			279
	Total																			4130

Ref.	Description	Materials	Means Reference Number	Unit Cost	Unit	Length	Width	Height	Diameter	Area	Volume	Weight	Density	Time	Number	Unit	Swell Factor	Quantity	Unit	Cost
	Reclaim Control Bld 22																			
	Structure's Demolition Cost	Steel Bld. Large	02220 110 0012	0.26	/CF	22	16	12								FT		4224	CF	1098
	Structure's Vol. Demolished																0.01	2	CY	
	Rubble's Weight (exclude steel)																			
	Truck's Capacity																			
	Haulage																			
	Transportation Cost Non Steel Truck																			
	Transportation Cost Non Steel Drive																			
	Disposal Cost Non Steel	ECDC	ECDC	35	/TON						2					CY		2	CY	70
	Steel's Weight																			
	Truck's Capacity																			
	Haulage																			
	Transportation Cost Steel Truck																			
	Transportation Cost Steel Truck Drive																			
	Disposal Cost Steel																			
	Subtotal																			1168
	Equipment 's Disposal Cost																			
	Dismantling Cost																			
	Equipment 's Vol. Demolished																			
	Loading Costs																			
	Transport Costs																			
	Disposal Costs																			
	Subtotal																			
	Pad's Demolition																			
	Demolition Cost	Concrete demolition	ConcreteDemo1	6.81	/CY	22	22	0.5								FT		9	CY	61
	Pad's Vol. Demolished																1.3	12	CY	
	Loading Cost	Front end loader 3 CY	02315 424 1300	1.43	/CY													12	CY	17
	Transportation Cost	12 CY (16 Ton) Dump Truck 1/2 mi. rnd. trip	02315 490 0320	3.49	/CY													12	CY	42
	Disposal Costs	On site disposal	02220 240 5550	7.75	/CY													12	CY	93
	Subtotal																			213
	Concrete Demolition																			
	Demolition Cost																			
	Concrete's Vol. Demolished																			
	Loading Cost																			
	Transportation Cost																			
	Disposal Costs																			
	Subtotal																			
	Concrete Demolition																			
	Demolition Cost																			
	Concrete's Vol. Demolished																			
	Loading Cost																			
	Transportation Cost																			
	Disposal Costs																			
	Subtotal																			
	Total																			1381

Ref.	Description	Materials	Means Reference Number	Unit Cost	Unit	Length	Width	Height	Diameter	Area	Volume	Weight	Density	Time	Number	Unit	Swell Factor	Quantity	Unit	Cost
	Sample House 23																			
	Structure's Demolition Cost	Steel Bld. Large	02220 110 0012	0.26	/CF	22	22	30								FT		14520	CF	3775
	Structure's Vol. Demolished																0.01	5	CY	
	Rubble's Weight (exclude steel)																			
	Truck's Capacity																			
	Haulage																			
	Transportation Cost Non Steel Truck																			
	Transportation Cost Non Steel Drive																			
	Disposal Cost Non Steel	ECDC	ECDC	35	/TON						5					CY		5	CY	175
	Steel's Weight																			
	Truck's Capacity																			
	Haulage																			
	Transportation Cost Steel Truck																			
	Transportation Cost Steel Truck Drive																			
	Disposal Cost Steel																			
	Subtotal																			3950
	Equipment 's Disposal Cost																			
	Dismantling Cost																			
	Equipment 's Vol. Demolished																			
	Loading Costs																			
	Transport Costs																			
	Disposal Costs																			
	Subtotal																			
	Pad's Demolition																			
	Demolition Cost	Concrete demolition	ConcreteDemo1	6.81	/CY	22	22	0.5								FT		9	CY	61
	Pad's Vol. Demolished																1.3	12	CY	
	Loading Cost	Front end loader 3 CY	02315 424 1300	1.43	/CY													12	CY	17
	Transportation Cost	12 CY (16 Ton) Dump Truck 1/2 mi, md. trip	02315 490 0320	3.49	/CY													12	CY	42
	Disposal Costs	On site disposal	02220 240 5550	7.75	/CY													12	CY	93
	Subtotal																			213
	Concrete Demolition																			
	Demolition Cost																			
	Concrete's Vol. Demolished																			
	Loading Cost																			
	Transportation Cost																			
	Disposal Costs																			
	Subtotal																			
	Concrete Demolition																			
	Demolition Cost																			
	Concrete's Vol. Demolished																			
	Loading Cost																			
	Transportation Cost																			
	Disposal Costs																			
	Subtotal																			
	Total																			4163

Ref.	Description	Materials	Means Reference Number	Unit Cost	Unit	Length	Width	Height	Diameter	Area	Volume	Weight	Density	Time	Number	Unit	Swell Factor	Quantity	Unit	Cost
	Stacking Tube 24																			
	Structure's Demolition Cost	Concrete Bld, Large	02220 110 0050	0.37	/CF			200	20						4	FT		62832	CF	23248
	Structure's Vol. Demolished																0.01	23	CY	
	Rubble's Weight (exclude steel)																			
	Truck's Capacity																			
	Haulage																			
	Transportation Cost Non Steel Truck																			
	Transportation Cost Non Steel Drive																			
	Disposal Cost Non Steel	ECDC	ECDC	35	/TON						23					CY		23	CY	805
	Steel's Weight																			
	Truck's Capacity																			
	Haulage																			
	Transportation Cost Steel Truck																			
	Transportation Cost Steel Truck Drive																			
	Disposal Cost Steel																			
	Subtotal																			24053
	Equipment 's Disposal Cost																			
	Dismantling Cost																			
	Equipment 's Vol. Demolished																			
	Loading Costs																			
	Transport Costs																			
	Disposal Costs																			
	Subtotal																			
	Pad's Demolition																			
	Demolition Cost	Concrete demolition	ConcreteDemo1	6.81	/CY					186					4	CY		744	CY	5067
	Pad's Vol. Demolished																1.3	967	CY	
	Loading Cost	Front end loader 3 CY	02315 424 1300	1.43	/CY													967	CY	1383
	Transportation Cost	12 CY (16 Ton) Dump Truck 1/2 mi. md. trip	02315 490 0320	3.49	/CY													967	CY	3375
	Disposal Costs	On site disposal	02220 240 5550	7.75	/CY													967	CY	7494
	Subtotal																			17319
	Concrete Demolition																			
	Demolition Cost																			
	Concrete's Vol. Demolished																			
	Loading Cost																			
	Transportation Cost																			
	Disposal Costs																			
	Subtotal																			
	Concrete Demolition																			
	Demolition Cost																			
	Concrete's Vol. Demolished																			
	Loading Cost																			
	Transportation Cost																			
	Disposal Costs																			
	Subtotal																			
	Total																			41372

Ref.	Description	Materials	Means Reference Number	Unit Cost	Unit	Length	Width	Height	Diameter	Area	Volume	Weight	Density	Time	Number	Unit	Swell Factor	Quantity	Unit	Cost
	Loadout Silo 25																			
	Structure's Demolition Cost	Concrete Bld. Large	02220 110 0050	0.37	/CF			200	50						4	FT		392699	CF	145299
	Structure's Vol. Demolished																			
	Rubble's Weight (exclude steel)																			
	Truck's Capacity																			
	Haulage																			
	Transportation Cost Non Steel Truck																			
	Transportation Cost Non Steel Drive																			
	Disposal Cost Non Steel	ECDC	ECDC	35	/TON						145					CY		145	CY	5075
	Steel's Weight																			
	Truck's Capacity																			
	Haulage																			
	Transportation Cost Steel Truck																			
	Transportation Cost Steel Truck Drive																			
	Disposal Cost Steel																			
	Subtotal																			150374
	Equipment 's Disposal Cost																			
	Dismantling Cost																			
	Equipment 's Vol. Demolished																			
	Loading Costs																			
	Transport Costs																			
	Disposal Costs																			
	Subtotal																			
	Pad's Demolition																			
	Demolition Cost	Concrete demolition	ConcreteDemo1	6.81	/CY					2327					1	CY		2327	CY	15847
	Pad's Vol. Demolished																1.3	3025	CY	
	Loading Cost	Front end loader 3 CY	02315 424 1300	1.43	/CY													3025	CY	4326
	Transportation Cost	12 CY (16 Ton) Dump Truck 1/2 mi. md. trip	02315 490 0320	3.49	/CY													3025	CY	10557
	Disposal Costs	On site disposal	02220 240 5550	7.75	/CY													3025	CY	23444
	Subtotal																			54174
	Concrete Demolition																			
	Demolition Cost																			
	Concrete's Vol. Demolished																			
	Loading Cost																			
	Transportation Cost																			
	Disposal Costs																			
	Subtotal																			
	Concrete Demolition																			
	Demolition Cost																			
	Concrete's Vol. Demolished																			
	Loading Cost																			
	Transportation Cost																			
	Disposal Costs																			
	Subtotal																			
	Total																			204548

Ref.	Description	Materials	Means Reference Number	Unit Cost	Unit	Length	Width	Height	Diameter	Area	Volume	Weight	Density	Time	Number	Unit	Swell Factor	Quantity	Unit	Cost
	Railroad 26																			
	Structure's Demolition Cost																			
	Structure's Vol. Demolished																			
	Rubble's Weight (exclude steel)																			
	Truck's Capacity																			
	Haulage																			
	Transportation Cost Non Steel Truck																			
	Transportation Cost Non Steel Drive																			
	Disposal Cost Non Steel																			
	Steel's Weight																			
	Truck's Capacity																			
	Haulage																			
	Transportation Cost Steel Truck																			
	Transportation Cost Steel Truck Drive																			
	Disposal Cost Steel																			
	Subtotal																			
	Equipment 's Disposal Cost	Rail Road Removal	Contractors	10000	/Mi	8100										LF		1.5	Mi	15000
	Dismantling Cost																			
	Equipment 's Vol. Demolished																			
	Loading Costs																			
	Transport Costs																			
	Disposal Costs																			
	Subtotal																			15000
	Concrete Demolition																			
	Demolition Cost																			
	Concrete's Vol. Demolished																			
	Loading Cost																			
	Transportation Cost																			
	Disposal Costs																			
	Subtotal																			
	Concrete Demolition																			
	Demolition Cost																			
	Concrete's Vol. Demolished																			
	Loading Cost																			
	Transportation Cost																			
	Disposal Costs																			
	Subtotal																			
	Concrete Demolition																			
	Demolition Cost																			
	Concrete's Vol. Demolished																			
	Loading Cost																			
	Transportation Cost																			
	Disposal Costs																			
	Subtotal																			
	Total																			15000

Ref.	Description	Materials	Means Reference Number	Unit Cost	Unit	Length	Width	Height	Diameter	Area	Volume	Weight	Density	Time	Number	Unit	Swell Factor	Quantity	Unit	Cost
	Powerline 27																			
	Structure's Demolition Cost																			
	Structure's Vol. Demolished																			
	Rubble's Weight (exclude steel)																			
	Truck's Capacity																			
	Haulage																			
	Transportation Cost Non Steel Truck																			
	Transportation Cost Non Steel Drive																			
	Disposal Cost Non Steel																			
	Steel's Weight																			
	Truck's Capacity																			
	Haulage																			
	Transportation Cost Steel Truck																			
	Transportation Cost Steel Truck Drive																			
	Disposal Cost Steel																			
	Subtotal																			
	Equipment 's Disposal Cost	Powerpole	Hiawatha	100	EA										25	EA		25	EA	2500
	Dismantling Cost																			
	Equipment 's Vol. Demolished																			
	Loading Costs																			
	Transport Costs																			
	Disposal Costs																			
	Subtotal																			2500
	Concrete Demolition																			
	Demolition Cost																			
	Concrete's Vol. Demolished																			
	Loading Cost																			
	Transportation Cost																			
	Disposal Costs																			
	Subtotal																			
	Concrete Demolition																			
	Demolition Cost																			
	Concrete's Vol. Demolished																			
	Loading Cost																			
	Transportation Cost																			
	Disposal Costs																			
	Subtotal																			
	Concrete Demolition																			
	Demolition Cost																			
	Concrete's Vol. Demolished																			
	Loading Cost																			
	Transportation Cost																			
	Disposal Costs																			
	Subtotal																			
	Total																			2500

Ref.	Description	Materials	Means Reference Number	Unit Cost	Unit	Length	Width	Height	Diameter	Area	Volume	Weight	Density	Time	Number	Unit	Swell Factor	Quantity	Unit	Cost
	Aphalt 28																			
	Structure's Demolition Cost																			
	Structure's Vol. Demolished																			
	Rubble's Weight (exclude steel)																			
	Truck's Capacity																			
	Haulage																			
	Transportation Cost Non Steel Truck																			
	Transportation Cost Non Steel Drive																			
	Disposal Cost Non Steel																			
	Steel's Weight																			
	Truck's Capacity																			
	Haulage																			
	Transportation Cost Steel Truck																			
	Transportation Cost Steel Truck Drive																			
	Disposal Cost Steel																			
	Subtotal																			
	Equipment 's Disposal Cost																			
	Dismantling Cost																			
	Equipment 's Vol. Demolished																			
	Loading Costs																			
	Transport Costs																			
	Disposal Costs																			
	Subtotal																			
	Haul Road																			
	Pavement's Demolition																			
	Demolition Cost	Pavement Removal 4-6"	02220 250 5050	6.75	/SY	4700	24									FT		12533	SY	84598
	Pavement's Vol. Demolished							0.5									1.3	2715	CY	
	Loading Cost																			
	Transportation Cost																			
	Disposal Costs	On site disposal	02220 240 5550	7.75	/CY													2715	CY	21041
	Subtotal																			105639
	Parking Lot																			
	Pavement's Demolition																			
	Demolition Cost	Pavement Removal 4-6"	02220 250 5050	6.75	/SY	50	140									FT		778	SY	5252
	Pavement's Vol. Demolished							0.25										84	CY	
	Loading Cost																			
	Transportation Cost																			
	Disposal Costs	On site disposal	02220 240 5550	7.75	/CY													84	CY	651
	Subtotal																			5903
	Concrete Demolition																			
	Demolition Cost																			
	Concrete's Vol. Demolished																			
	Loading Cost																			
	Transportation Cost																			
	Disposal Costs																			
	Subtotal																			
	Total																			111542

Ref.	Description	Materials	Means Reference Number	Unit Cost	Unit	Length	Width	Height	Diameter	Area	Volume	Weight	Density	Time	Number	Unit	Swell Factor	Quantity	Unit	Cost
	Pumphouse 29																			
	Structure's Demolition Cost	Mixed Materials Bld. Large	02220 110 0100	0.28	/CF	40	26	10								FT		10400	CF	2912
	Structure's Vol. Demolished																			
	Rubble's Weight (exclude steel)																			
	Truck's Capacity																			
	Haulage																			
	Transportation Cost Non Steel Truck																			
	Transportation Cost Non Steel Drive																			
	Disposal Cost Non Steel	ECDC	ECDC	35	/TON						135					CY		135	CY	4725
	Steel's Weight																			
	Truck's Capacity																			
	Haulage																			
	Transportation Cost Steel Truck																			
	Transportation Cost Steel Truck Drive																			
	Disposal Cost Steel																			
	Subtotal																			7637
	Pumphouse																			
	Structure's Demolition Cost	Steel Bld. Large	02220 110 0012	0.26	/CF			8	12						1	FL		905	CF	235
	Structure's Vol. Demolished																0.01	5	CY	
	Rubble's Weight (exclude steel)																			
	Truck's Capacity																			
	Haulage																			
	Transportation Cost Non Steel Truck																			
	Transportation Cost Non Steel Drive																			
	Disposal Cost Non Steel	ECDC	ECDC	35	/TON						5					CY		5	CY	175
	Steel's Weight																			
	Truck's Capacity																			
	Haulage																			
	Transportation Cost Steel Truck																			
	Transportation Cost Steel Truck Drive																			
	Disposal Cost Steel																			
	Subtotal																			410
	Pumphouse																			
	Structure's Demolition Cost	Concrete Bld. Large	02220 110 0050	0.37	/CF			30	21						1	FL		10391	CF	3845
	Structure's Vol. Demolished																0.01	4	CY	
	Rubble's Weight (exclude steel)																			
	Truck's Capacity																			
	Haulage																			
	Transportation Cost Non Steel Truck																			
	Transportation Cost Non Steel Drive																			
	Disposal Cost Non Steel	ECDC	ECDC	35	/TON						4					CY		4	CY	140
	Steel's Weight																			
	Truck's Capacity																			
	Haulage																			
	Transportation Cost Steel Truck																			
	Transportation Cost Steel Truck Drive																			
	Disposal Cost Steel																			
	Subtotal																			3985
	Equipment 's Disposal Cost																			
	Dismantling Cost																			
	Equipment 's Vol. Demolished																			
	Loading Costs																			
	Transport Costs																			
	Disposal Costs																			
	Subtotal																			
	Pad's Demolition																			
	Demolition Cost	Concrete demolition	ConcreteDemo1	6.81	/CY	40	26	0.5								FT		19	CY	129
	Pad's Vol. Demolished																1.3	25	CY	
	Loading Cost	Front end loader 3 CY	02315 424 1300	1.43	/CY													25	CY	36
	Transportation Cost	12 CY (16 Ton) Dump Truck 1/2 mi. md. trip	02315 490 0320	3.49	/CY													25	CY	87
	Disposal Costs	On site disposal	02220 240 5550	7.75	/CY													25	CY	194
	Subtotal																			446
	Total																			12478

Ref.	Description	Materials	Means Reference Number	Unit Cost	Unit	Length	Width	Height	Diameter	Area	Volume	Weight	Density	Time	Number	Unit	Swell Factor	Quantity	Unit	Cost
	River Pump 30																			
	Structure's Demolition Cost	Steel Bld, Large	02220 110 0012	0.26	/CF	8	8	8								FT		512	CF	133
	Structure's Vol. Demolished																			
	Rubble's Weight (exclude steel)																			
	Truck's Capacity																			
	Haulage																			
	Transportation Cost Non Steel Truck																			
	Transportation Cost Non Steel Drive																			
	Disposal Cost Non Steel																			
	Steel's Weight																			
	Truck's Capacity																			
	Haulage																			
	Transportation Cost Steel Truck																			
	Transportation Cost Steel Truck Drive																			
	Disposal Cost Steel																			
	Subtotal																			133
	Equipment 's Disposal Cost																			
	Dismantling Cost																			
	Equipment 's Vol. Demolished																			
	Loading Costs																			
	Transport Costs																			
	Disposal Costs																			
	Subtotal																			
	Pad's Demolition																			
	Demolition Cost	Concrete demolition	ConcreteDemo1	6.81	/CY	8	8	1								FT		2	CY	14
	Pad's Vol. Demolished																1.3	3	CY	
	Loading Cost	Front end loader 3 CY	02315 424 1300	1.43	/CY													3	CY	4
	Transportation Cost	12 CY (16 Ton) Dump Truck 1/2 mi, md, trip	02315 490 0320	3.49	/CY													3	CY	10
	Disposal Costs	On site disposal	02220 240 5550	7.75	/CY													3	CY	23
	Subtotal																			51
	Concrete Demolition																			
	Demolition Cost																			
	Concrete's Vol. Demolished																			
	Loading Cost																			
	Transportation Cost																			
	Disposal Costs																			
	Subtotal																			
	Concrete Demolition																			
	Demolition Cost																			
	Concrete's Vol. Demolished																			
	Loading Cost																			
	Transportation Cost																			
	Disposal Costs																			
	Subtotal																			
	Total																			184

Ref.	Description	Materials	Means Reference Number	Unit Cost	Unit	Length	Width	Height	Diameter	Area	Volume	Weight	Density	Time	Number	Unit	Swell Factor	Quantity	Unit	Cost
	Guard Rails 31																			
	Structure's Demolition Cost	Guiderail remove	02220 240 0800	12.2	LF	4950										LF		4950	LF	60390
	Structure's Vol. Demolished																			
	Rubble's Weight (exclude steel)																			
	Truck's Capacity																			
	Haulage																			
	Transportation Cost Non Steel Truck																			
	Transportation Cost Non Steel Drive																			
	Disposal Cost Non Steel																			
	Steel's Weight																			
	Truck's Capacity																			
	Haulage																			
	Transportation Cost Steel Truck																			
	Transportation Cost Steel Truck Drive																			
	Disposal Cost Steel																			
	Subtotal																			60390
	Equipment 's Disposal Cost																			
	Dismantling Cost																			
	Equipment 's Vol. Demolished																			
	Loading Costs																			
	Transport Costs																			
	Disposal Costs																			
	Subtotal																			
	Concrete Demolition																			
	Demolition Cost																			
	Concrete's Vol. Demolished																			
	Loading Cost																			
	Transportation Cost																			
	Disposal Costs																			
	Subtotal																			
	Concrete Demolition																			
	Demolition Cost																			
	Concrete's Vol. Demolished																			
	Loading Cost																			
	Transportation Cost																			
	Disposal Costs																			
	Subtotal																			
	Concrete Demolition																			
	Demolition Cost																			
	Concrete's Vol. Demolished																			
	Loading Cost																			
	Transportation Cost																			
	Disposal Costs																			
	Subtotal																			
	Total																			60390

Ref.	Description	Materials	Means Reference Number	Unit Cost	Unit	Length	Width	Height	Diameter	Area	Volume	Weight	Density	Time	Number	Unit	Swell Factor	Quantity	Unit	Cost
	Culverts 32																			
	Excavate 12" diameter culvert	Excavation Bulk Bank 2 CY (322BL)	02315 424 0260	1.74	/CY	300	2	2								FT		44	CY	77
	Backfill 12" diameter culvert	Backfill Trench Minimal Haul 2 1/4 CY	02315 610 3080	1.58	/CY	300	2	2								FT		44	CY	70
	Excavate 18" diameter culvert	Excavation Bulk Bank 2 CY (322BL)	02315 424 0260	1.74	/CY	810	2	3								FT		180	CY	313
	Backfill 18" diameter culvert	Backfill Trench Minimal Haul 2 1/4 CY	02315 610 3080	1.58	/CY	810	2	3								FT		180	CY	284
	Excavate 24" diameter culvert	Excavation Bulk Bank 2 CY (322BL)	02315 424 0260	1.74	/CY	750	2	4								FT		222	CY	386
	Backfill 24" diameter culvert	Backfill Trench Minimal Haul 2 1/4 CY	02315 610 3080	1.58	/CY	750	2	4								FT		222	CY	351
	Subtotal																			1481
	Equipment 's Disposal Cost																			
	Dismantling Cost																			
	Equipment 's Vol. Demolished																			
	Loading Costs																			
	Transport Costs																			
	Disposal Costs																			
	Subtotal																			
	Concrete Demolition																			
	Demolition Cost																			
	Concrete's Vol. Demolished																			
	Loading Cost																			
	Transportation Cost																			
	Disposal Costs																			
	Subtotal																			
	Concrete Demolition																			
	Demolition Cost																			
	Concrete's Vol. Demolished																			
	Loading Cost																			
	Transportation Cost																			
	Disposal Costs																			
	Subtotal																			
	Concrete Demolition																			
	Demolition Cost																			
	Concrete's Vol. Demolished																			
	Loading Cost																			
	Transportation Cost																			
	Disposal Costs																			
	Subtotal																			
	Total																			1481

Ref.	Description	Materials	Means Reference Number	Unit Cost	Unit	Length	Width	Height	Diameter	Area	Volume	Weight	Density	Time	Number	Unit	Swell Factor	Quantity	Unit	Cost
	Stacking Tube 33																			
	36" Conveyor																			
	Structure's Demolition Cost	Steel Bld. Large	02220 110 0012	0.26	/CF	100	45	10								FT		45000	CF	11700
	Structure's Vol. Demolished																0.1	167	CY	
	Rubble's Weight (exclude steel)																			
	Truck's Capacity																			
	Haulage																			
	Transportation Cost Non Steel Truck																			
	Transportation Cost Non Steel Drive																			
	Disposal Cost Non Steel	ECDC	ECDC	35	/TON											CY		167	CY	5845
	Steel's Weight																			
	Truck's Capacity																			
	Haulage																			
	Transportation Cost Steel Truck																			
	Transportation Cost Steel Truck Drive																			
	Disposal Cost Steel																			
	Subtotal																			17545
	Steel Stacking Tube																			
	Structure's Demolition Cost	Steel Bld. Large	02220 110 0012	0.26	/CF			80.3	10						2	FT		12613	CF	3279
	Structure's Vol. Demolished																0.1	47	CY	
	Rubble's Weight (exclude steel)																			
	Truck's Capacity																			
	Haulage																			
	Transportation Cost Non Steel Truck																			
	Transportation Cost Non Steel Drive																			
	Disposal Cost Non Steel	ECDC	ECDC	35	/TON											CY		47	CY	1645
	Steel's Weight																			
	Truck's Capacity																			
	Haulage																			
	Transportation Cost Steel Truck																			
	Transportation Cost Steel Truck Drive																			
	Disposal Cost Steel																			
	Subtotal																			4924
	Concrete Demolition																			
	Demolition Cost	Concrete demolition	ConcreteDemo1	6.81	/CY						46					CY		46	CY	313
	Concrete's Vol. Demolished																1.3	60	CY	
	Loading Cost	Front end loader 3 CY	02315 424 1300	1.43	/CY													60	CY	86
	Transportation Cost	12 CY (16 Ton) Dump Truck 1/2 mi. rnd. trip	02315 490 0320	3.49	/CY													60	CY	209
	Disposal Costs	On site disposal	02220 240 5550	7.75	/CY													60	CY	465
	Subtotal																			1073
	Concrete Demolition																			
	Demolition Cost																			
	Concrete's Vol. Demolished																			
	Loading Cost																			
	Transportation Cost																			
	Disposal Costs																			
	Subtotal																			
	Total																			23542

Ref.	Description	Materials	Means Reference Number	Unit Cost	Unit	Length	Width	Height	Diameter	Area	Volume	Weight	Density	Time	Number	Unit	Swell Factor	Quantity	Unit	Cost
	Coal Sampler Addition 34																			
	Structure's Demolition Cost	Steel Bld, Large	02220 110 0012	0.26	/CF	27	26	16								FT		11232	CF	2920
	Structure's Vol. Demolished																0.1	42	CY	
	Rubble's Weight (exclude steel)																			
	Truck's Capacity																			
	Haulage																			
	Transportation Cost Non Steel Truck																			
	Transportation Cost Non Steel Drive																			
	Disposal Cost Non Steel	ECDC	ECDC	35	/TON								100			lb/cf		57	ton	1995
	Steel's Weight																			
	Truck's Capacity																			
	Haulage																			
	Transportation Cost Steel Truck																			
	Transportation Cost Steel Truck Drive																			
	Disposal Cost Steel																			
	Subtotal																			4915
	Equipment 's Disposal Cost																			
	Dismantling Cost																			
	Equipment 's Vol. Demolished																			
	Loading Costs																			
	Transport Costs																			
	Disposal Costs																			
	Subtotal																			
	Concrete Demolition																			
	Demolition Cost	Concrete demolition	ConcreteDemo1	6.81	/CY	27	26	0.75								FT		19	CY	129
	Concrete's Vol. Demolished																1.3	25	CY	
	Loading Cost	Front end loader 3 CY	02315 424 1300	1.43	/CY													25	CY	36
	Transportation Cost	12 CY (16 Ton) Dump Truck 1/2 mi. rnd. trip	02315 490 0320	3.49	/CY													25	CY	87
	Disposal Costs	On site disposal	02220 240 5550	7.75	/CY													25	CY	194
	Subtotal																			446
	Concrete Demolition																			
	Demolition Cost																			
	Concrete's Vol. Demolished																			
	Loading Cost																			
	Transportation Cost																			
	Disposal Costs																			
	Subtotal																			
	Concrete Demolition																			
	Demolition Cost																			
	Concrete's Vol. Demolished																			
	Loading Cost																			
	Transportation Cost																			
	Disposal Costs																			
	Subtotal																			
	Total																			5361

Ref.	Description	Materials	Means Reference Number	Unit Cost	Unit	Length	Width	Height	Diameter	Area	Volume	Weight	Density	Time	Number	Unit	Swell Factor	Quantity	Unit	Cost
	Conveyor Transfer 35																			
	Structure's Demolition Cost	Steel Bld. Large	02220 110 0012	0.26	/CF	1538	7	4								FT		43064	CF	11197
	Structure's Vol. Demolished																0.05	80	CY	
	Rubble's Weight (exclude steel)																			
	Truck's Capacity																			
	Haulage																			
	Transportation Cost Non Steel Truck																			
	Transportation Cost Non Steel Drive																			
	Disposal Cost Non Steel	ECDC	ECDC	35	/TON								100			lb/cf		108	ton	3780
	Steel's Weight																			
	Truck's Capacity																			
	Haulage																			
	Transportation Cost Steel Truck																			
	Transportation Cost Steel Truck Drive																			
	Disposal Cost Steel																			
	Subtotal																			14977
	Excavate 18" diameter culvert	Excavation Bulk Bank 2 CY (322BL)	02315 424 0260	1.74	/CY	800	2	3								FT		178	CY	310
	Backfill 18" diameter culvert	Backfill Trench Minimal Haul 2 1/4 CY	02315 610 3060	1.58	/CY	800	2	3								FT		178	CY	281
	Subtotal																			591
	Concrete Demolition																			
	Demolition Cost	Concrete demolition	ConcreteDemo1	6.81	/CY	8	2	2							22	FT		26	CY	177
	Concrete's Vol. Demolished																1.3	34	CY	
	Loading Cost	Front end loader 3 CY	02315 424 1300	1.43	/CY													34	CY	49
	Transportation Cost	12 CY (16 Ton) Dump Truck 1/2 mi. rnd. trip	02315 490 0320	3.49	/CY													34	CY	119
	Disposal Costs	On site disposal	02220 240 5550	7.75	/CY													34	CY	264
	Subtotal																			609
	Concrete Demolition																			
	Demolition Cost																			
	Concrete's Vol. Demolished																			
	Loading Cost																			
	Transportation Cost																			
	Disposal Costs																			
	Subtotal																			
	Concrete Demolition																			
	Demolition Cost																			
	Concrete's Vol. Demolished																			
	Loading Cost																			
	Transportation Cost																			
	Disposal Costs																			
	Subtotal																			
	Total																			16177

Ref.	Description	Materials	Means Reference Number	Unit Cost	Unit	Length	Width	Height	Diameter	Area	Volume	Weight	Density	Time	Number	Unit	Swell Factor	Quantity	Unit	Cost
	New Shop Oil Storage Bld 36																			
	Structure's Demolition Cost	Steel Bld. Large	02220 110 0012	0.26	/CF	40	80	18								FT		57600	CF	14976
	Structure's Vol. Demolished																0.01	21	CY	
	Rubble's Weight (exclude steel)																			
	Truck's Capacity																			
	Haulage																			
	Transportation Cost Non Steel Truck																			
	Transportation Cost Non Steel Drive																			
	Disposal Cost Non Steel	ECDC	ECDC	35	/TON								100			lb/cf		28	ton	980
	Steel's Weight																			
	Truck's Capacity																			
	Haulage																			
	Transportation Cost Steel Truck																			
	Transportation Cost Steel Truck Drive																			
	Disposal Cost Steel																			
	Subtotal																			15956
	Equipment 's Disposal Cost																			
	Dismantling Cost																			
	Equipment 's Vol. Demolished																			
	Loading Costs																			
	Transport Costs																			
	Disposal Costs																			
	Subtotal																			0
	Concrete Demolition																			
	Demolition Cost	Concrete demolition	ConcreteDemo1	6.81	/CY						126					CY		126	CY	858
	Concrete's Vol. Demolished																1.3	164	CY	
	Loading Cost	Front end loader 3 CY	02315 424 1300	1.43	/CY													164	CY	235
	Transportation Cost	12 CY (16 Ton) Dump Truck 1/2 mi. rnd. trip	02315 490 0320	3.49	/CY													164	CY	572
	Disposal Costs	On site disposal	02220 240 5550	7.75	/CY													164	CY	1271
	Subtotal																			2936
	Concrete Demolition																			
	Demolition Cost																			
	Concrete's Vol. Demolished																			
	Loading Cost																			
	Transportation Cost																			
	Disposal Costs																			
	Subtotal																			
	Concrete Demolition																			
	Demolition Cost																			
	Concrete's Vol. Demolished																			
	Loading Cost																			
	Transportation Cost																			
	Disposal Costs																			
	Subtotal																			
	Total																			18892

Ref.	Description	Materials	Means Reference Number	Unit Cost	Unit	Length	Width	Height	Diameter	Area	Volume	Weight	Density	Time	Number	Unit	Swell Factor	Quantity	Unit	Cost
	Plant Expansion 37																			
	Plant Feed Conveyor																			
	Structure's Demolition Cost	Steel Bld. Large	02220 110 0012	0.26	/CF	233	4	4								FT		3728	CF	969
	Structure's Vol. Demolished																0.01	1	CY	
	Fine Raow Coal Conveyor																			
	Structure's Demolition Cost	Steel Bld. Large	02220 110 0012	0.26	/CF	200	4	4								FT		3200	CF	832
	Structure's Vol. Demolished																0.01	1	CY	
	Refuse Conveyor																			
	Structure's Demolition Cost	Steel Bld. Large	02220 110 0012	0.26	/CF	100	4	4								FT		1600	CF	416
	Structure's Vol. Demolished																0.01	1	CY	
	Stacking Conveyor																			
	Structure's Demolition Cost	Steel Bld. Large	02220 110 0012	0.26	/CF	100	4	4								FT		1600	CF	416
	Structure's Vol. Demolished																0.01	1	CY	
	Subtotal																			2633
	Plant Feed Conveyor																			
	Concrete Demolition																			
	Demolition Cost	Concrete demolition	ConcreteDemo1	6.81	/CY						42.6					CY		42.6	CY	290
	Concrete's Vol. Demolished																1.3	55	CY	
	Loading Cost	Front end loader 3 CY	02315 424 1300	1.43	/CY													55	CY	79
	Transportation Cost	12 CY (16 Ton) Dump Truck 1/2 mi. rnd. trip	02315 490 0320	3.49	/CY													55	CY	192
	Disposal Costs	On site disposal	02220 240 5550	7.75	/CY													55	CY	426
	Subtotal																			987
	Fine Raow Coal Conveyor																			
	Concrete Demolition																			
	Demolition Cost	Concrete demolition	ConcreteDemo1	6.81	/CY						33.1					CY		33.1	CY	225
	Concrete's Vol. Demolished																1.3	43	CY	
	Loading Cost	Front end loader 3 CY	02315 424 1300	1.43	/CY													43	CY	61
	Transportation Cost	12 CY (16 Ton) Dump Truck 1/2 mi. rnd. trip	02315 490 0320	3.49	/CY													43	CY	150
	Disposal Costs	On site disposal	02220 240 5550	7.75	/CY													43	CY	333
	Subtotal																			769
	Refuse Conveyor																			
	Concrete Demolition																			
	Demolition Cost	Concrete demolition	ConcreteDemo1	6.81	/CY						15.3					CY		15.3	CY	104
	Concrete's Vol. Demolished																1.3	20	CY	
	Loading Cost	Front end loader 3 CY	02315 424 1300	1.43	/CY													20	CY	29
	Transportation Cost	12 CY (16 Ton) Dump Truck 1/2 mi. rnd. trip	02315 490 0320	3.49	/CY													20	CY	70
	Disposal Costs	On site disposal	02220 240 5550	7.75	/CY													20	CY	155
	Subtotal																			358
	Stacking Conveyor																			
	Concrete Demolition																			
	Demolition Cost	Concrete demolition	ConcreteDemo1	6.81	/CY						85.1					CY		85.1	CY	580
	Concrete's Vol. Demolished																1.3	111	CY	
	Loading Cost	Front end loader 3 CY	02315 424 1300	1.43	/CY													111	CY	159
	Transportation Cost	12 CY (16 Ton) Dump Truck 1/2 mi. rnd. trip	02315 490 0320	3.49	/CY													111	CY	387
	Disposal Costs	On site disposal	02220 240 5550	7.75	/CY													111	CY	860
	Subtotal																			1986
	Total																			6733

	Equipment Cost	Hourly Operating Costs	Equipment Overhead	Operator's Hourly Wage Rate	Hourly Cost	Number of Men or Eq.	Total Eq. & Lab. Costs	Units	Quantity	Units	Production Rate	Units	Equip. + Labor Time/Dis.	Units	Cost
Cleanup Coal Piles															6899
Recontouring															201638
Topsoil															90123
Ripping															18194
Subtotal															309955

	Equipment Cost	Hourly Operating Costs	Equipment Overhead	Operator's Hourly Wage Rate	Hourly Cost	Number of Men or Eq.	Total Eq. & Lab. Costs	Units	Quantity	Units	Production Rate	Units	Equip. + Labor Time/Dis.	Units	Cost
Savage Coal Terminal Cleanup Coal Piles															
D9R Semi-U EROPS (9-54) (2H2005)	18485	80.3	0.1	55.4	259.26	1	259.26	HR	1500	CY	187	CY/HR	8	HR	2074
988G EROPS (9-37) (2nd2005) 2005	9010	40.05	0.1	55.4	155.77	1	155.77	HR	1500	CY	187	CY/HR	8	HR	1246
CLAB					42.65	1	42.65	HR					16	HR	682
Foreman Average, Outside					59.9	1	59.9	HR					16	HR	958
5,000 gal H2O truck Diesel (20-17) (2nd2005)	4990	31.95	0.1	43.3	109.63	1	109.63	HR					16	HR	1754
Pickup Truck Crew 4x4 1 ton (20-17) (2nd2005)	900	5.4	0.1	0	11.57	1	11.57	HR					16	HR	185
Subtotal															6899

	Equipment Cost	Hourly Operating Costs	Equipment Overhead	Operator's Hourly Wage Rate	Hourly Cost	Number of Men or Eq.	Total Eq. & Lab. Costs	Units	Quantity	Units	Production Rate	Units	Equip. + Labor Time/Dis.	Units	Cost
Svage Coal Terminal Recontouring															
D9R Semi-U EROPS (9-54) (2H2005)	18485	80.3	0.1	55.4	259.26	1	259.26	HR					543	HR	140778
CLAB					42.65	1	42.65	HR					272	HR	11601
Foreman Average, Outside					59.9	1	59.9	HR					272	HR	16293
5,000 gal H2O truck Diesel (20-17) (2nd2005)	4990	31.95	0.1	43.3	109.63	1	109.63	HR					272	HR	29819
Pickup Truck Crew 4x4 1 ton (20-17) (2nd2005)	900	5.4	0.1	0	11.57	1	11.57	HR					272	HR	3147
Subtotal															201638

	Equipment Cost	Hourly Operating Costs	Equipment Overhead	Operator's Hourly Wage Rate	Hourly Cost	Number of Men or Eq.	Total Eq. & Lab. Costs	Units	Quantity	Units	Production Rate	Units	Equip. + Labor Time/Dis.	Units	Cost
Savage Coal Terminal Topsoil															
D8R Series II (9-54) (2nd2005)	14705	59.75	0.1	55.4	213.03	1	213.03	HR					93	HR	19812
627G EROPS (9-51) (2nd2005)	16560	98.8	0.1	55.4	267.58	1	267.58	HR					185	HR	49502
CLAB					42.65	1	42.65	HR					93	HR	3966
Foreman Average, Outside					59.9	1	59.9	HR					93	HR	5571
5,000 gal H2O truck Diesel (20-17) (2nd2005)	4990	31.95	0.1	43.3	109.63	1	109.63	HR					93	HR	10196
Pickup Truck Crew 4x4 1 ton (20-17) (2nd2005)	900	5.4	0.1	0	11.57	1	11.57	HR					93	HR	1076
Subtotal															90123

	Equipment Cost	Hourly Operating Costs	Equipment Overhead	Operator's Hourly Wage Rate	Hourly Cost	Number of Men or Eq.	Total Eq. & Lab. Costs	Units	Quantity	Units	Production Rate	Units	Equip. + Labor Time/Dis.	Units	Cost
Ripping															
D7R Series II (9-54) (2nd2005)	11230	46.65	0.1	55.4	176.9	1	176.9	HR					93	HR	16452
Multi-Shank Ripper 190-259 P (9-61) (2nd2005)	1915	6.15	0.1		18.73	1	18.73	HR					93	HR	1742
Subtotal															18194

Ref.	Description	Materials	Means Reference Number	Unit Cost	Unit	Length	Width	Height	Diameter	Area	Volume	Weight	Density	Time	Number	Unit	Swell Factor	Quantity	Unit	Cost
	Vegetation																			
	General Area																			
	Seeding Equipment and Labor	Tractor Spreader (equip. & labor) B-66	Reveg004	11.95	/MSF					125.9						AC		5484	MSF	65534
	Seeding Material	General Seed Mix	Savage07221	151.15	/AC					125.9						AC		126	AC	19045
	Mulch	Hay 1 inch small power mulcher	M029105000250	75	/MSF					125.9						AC		5484	MSF	411300
	Riprarian																			
	Seeding Equipment and Labor	Hydro Spreader (equip. & labor) B-81 80MS	Reveg002	19.8	/MSF					5.28						AC		230	MSF	4554
	Seeding Material	Riparian Seed Mix	Savage07222	49.5	/AC					5.28						AC		5	AC	248
	Area									5.28										
										5.28						AC				
		Bare root seedlings, 11" to 16" med. soil	02915 400 0562	1.31	Ea										4963	EA		4963	EA	6502
	Subtotal																			507183
	Revegetation																			
	25% Revegetation Rate																			126796
	Subtotal																			126796
	Subtotal																			
	Subtotal																			
	Total																			633979

APPENDIX 8-3

Soils Evaluation
For
Settling Pond Area

FINAL REPORT

for

ORDER 1 SOIL SURVEY including

SOIL TOPSOIL CHARACTERIZATION

Prepared for

PROPOSED SETTLING POND AREA
SAVAGE COAL TERMINAL
SAVAGE SERVICES CORPORATION
2025 East 5000 South
Price, Utah 84501

Prepared By

Mt. Nebo Scientific, Inc.
330 East 400 South, Suite 6
Springville , Utah 84663
(801) 489-6937

Bruce Chesler, Soil Scientist

August 21, 2006

Introduction

An Order 1 soil survey was conducted on approximately 6.6 acres of Savage Coal Terminal Loadout area, on a previously non-disturbed area owned by Savage Services Corporation, Inc. The active loadout facility is currently under permit by the State of Utah, and comprises 154 total acres, most of which currently has coal loading and processing activities present. The 6.6 acre area study site lies to the northwest of Savage Services offices, and is characterized by gently-sloping Mancos shale fanslopes with a salt desert shrub vegetation type. Two settling ponds with a total area of approximately 2 acres are proposed for this site for coal wash water clarification, along with an undisturbed diversion and an area proposed for topsoil salvage storage along the southwest perimeter of the study site (see Savage Coal Terminal Soils Map, September 2005, Blackhawk Engineering, Inc).

Objectives

Provide a detailed Order 1 Soil Survey is provided on the 6.6 acre site to determine soil conditions and variability in accordance with National Cooperative Soil Survey standards.

Physical and chemical properties of both topsoil and subsoils were tested to determine suitability of topsoil for reclamation purposes according to R645-301-200 Soil Guidelines for Management of Topsoil and Overburden (OGM Price Field Office, October 2005).

Calculate topsoil salvage depths and provide a map showing areas of topsoil salvage and make recommendations to amend the quality of available topsoil materials, based on the above analytical studies and the Order 1 soil survey.

Make recommendations for the salvage operations with suggestions to reclamation specialists when using the topsoil materials to reclaim this site area to UDOGM standards.

Methods

Prior to initiating fieldwork, Order 3 soil survey data from the area was reviewed (Sheet 19 of Soil Survey of Carbon Area, Jensen and Borchert, 1988.) A second, more detailed soil survey reconnaissance in this area was made at the Order 1 level of detail (James Walsh Associates, July 1980). This information was also reviewed and given consideration in my map unit design for the 6.6 area study site. Telephone discussions with Leland Sasser, NRCS Soil Scientist at the Price Field Office, were useful in the correlation and soil taxonomic classifications of these soils types. The current field survey of the study area was accomplished by Bruce Chesler on July 20 and 21, 2006. A telephone discussion between Bruce Chesler, soil surveyor, and Priscilla Burton, Soil Scientist at UDGOM Price Field office on July 18, 2006 was crucial for me, in detailing the scope of the projected soil survey and the type of soil analysis required for laboratory topsoil characterization at this site. Special considerations were made toward observing the extent of, and characterizing any high water table in the area.

An introduction to the proposed disturbed area was given to me by Dan Guy of Blackhawk Engineering, Inc. and the survey stakes representing ditch location and settling pond corners were noted. Spade and auger reconnaissance was made initially to determine soil surface variability, and to choose locations for backhoe soil description and sampling sites. Three soil profiles were chosen to represent map unit variability, then were sampled and bagged by horizon (or depth increment) and sent to BYU Soil and Plant Analysis Laboratory for characterization according to state standards (Table 3, OGM Topsoil Guidelines, 2003).

Soil and Landscape Description

Mancos Shale badlands comprise the geologic parent materials for soil development in the area. These Cretaceous age marine sediments are known from previous research to contain both strongly saline and sodic soil conditions in soils under these climatic conditions (USDA Soil Characterization Data, viewed on NSSC website). High dissolved salt contents, high Sodium Adsorption Ratios and Electrical Conductivities, and greater than 40 % clay content in both the soil epipedons and subsoils are evident in Mancos shale derived materials in general.

The landscape of the study area is characterized by flat to gently-sloping (less than 5 %), fanslopes derived from colluvial and alluvial materials comprised of marine sedimentary rock. These sediments appear in profile as olive to gray colored poorly defined horizons. Due to an arid climatic and the lack of mechanical weathering in a low precipitation area, combined with Mancos shale mineralogy, soil development is weak and difficult to define in the field. Soil moisture regime is Ustic, and soil temperature is mesic at this

site. Soil Classifications at these sites fall within the Entisol Soil Order. Vegetation in the study area ranges from barren land to matted saltbrush and greasewood plant communities, with a shadscale component.

Results and Discussion

Three soil profiles were described in the area between the water diversion ditch and settling pond areas, chosen to represent the soil depth variability at the site. These pedon description sites were based upon previous soil surveys in the area and following a walk across the landscape. Appendix 1 includes the three soil profile descriptions identified as SP-1, 2, and 3. SP-1 is correlated to the Killpack Series, a Fine-silty, mixed, active, calcareous, mesic, Typic Torriorthent (OSD 7/2003), with weathered shale bedrock occurring at a depth of less than forty inches. Profiles SP-2 and SP-3 resemble the Billings Series, Fine-silty, mixed, active, calcareous, Typic Torrifluvent (OSD 7/2003) in that the Mancos shale bedrock is not evident in any depth greater than sixty inches. All three soil profiles were free of apparent mottling or other redoximorphic features which may indicate high water tables in the area. All of the soil profiles contained some concentrations of dissolved salts (crystallization), resulting from their transport and deposition in the profile. These salt concentrations were observed without magnification. Soils were generally moist at the time of sampling (7-21-06) at depths below 36 inches, on account of their dense, massive structure and slow permeability. Pedon SP-2 had the most apparent water content of the three sites. Surface cracks were apparent near SP-2, indicative of the high clay contents in these surface soils.

The clay mineralogy of the Mancos shales include both illite and kaolinite, which may have been a factor in the difficulties in accurately dispersing clays in samples for particle size laboratory analysis. In conversations with soil chemists (Henry Sauer in Denver, Colorado and Bruce Webb, Provo, Utah) the presence of certain clay minerals in these samples may have influenced a complete dispersion of clay. Thus, only surface soil data for mechanical particle sizes were analysed by the lab, and my field estimates of these soil samples were generally underestimated for clays by 20-25% in the field.

One other feature of the soil landscape which pertain to topsoil suitability and reseeding potential of this area are certain land use practices on adjacent properties which have, at times in the past, contributed coal dust and coal waste by-products onto the surfaces of these soils. I noticed that less than 1 inch of coal fines were present, but erratically distributed, on western portions of the study area. Some of the coal waste products (fines) may have already been incorporated into soil profiles in this area.

Soil Chemical and textural properties are presented in Table 1. The chemical analyses concur with projected high salt, sodium, and clay contents generally recognized on Mancos shale derived soils, and referred to in the above discussion. Electrical conductivities in SP-1 were in the good range to 13 inch depths, then fair to poorly rated to 35 inches (bedrock contact). In SP-2, the EC were fair to 24 inch depth, then poor to unacceptable ratings. SP-3 has EC rated only poor to unacceptable.

Sodium Adsorption Ratios at soil SP-1 is fair to good to 13 inches, then poor in the subsoil. SP-2 has fairly rated SAR in the depth increments 0-12 inches and 24-48 inches, otherwise poor to unacceptable rated. SP-3 are all greater than 14 SAR, unacceptable by UDOGM Guidelines (Table 4, Topsoil Suitability Evaluations).

These data indicate to me the presence of both strongly saline conditions and sodic (high SAR) in these soils. Native topsoil (0-12 inches) in the study area were found to be suitable materials for seed and plant media, except for their clayey textures. Subsoils in this area are poorly suited as substitute topsoil material due to their high salt accumulations and clay content over 40% (field estimate). This could be anticipated due to the arid climate and the marine shale mineralogy of the geologic parent material.

Figure 1. shows my recommended depths of topsoil salvage at the three soil map units. The upper 26 inches of SP-1 (Killpack, clayey surface) and upper 24 inches SP-2 (Billings, moist) provide the best choice for topsoil materials with regard to salt content management. Only the upper 6 inches of SP-3 (Billings, eroded) should be considered for replacement topsoil due to high SAR values throughout the subsoils here.

Irrigation with less saline water with the intent of leaching the salts into the lower soil profile is a means whereby beneficial change in chemical composition could occur. Leaching with irrigation water found in the Price River nearby would not appreciably affect the salt movement, because of its inherently high salt contents.

Clay contents are all higher than 40 % in the all topsoils at the sampling sites. My field textural estimates for epipedons were generally 25% less than values derived by mechanical laboratory analysis. Thus, I can assume that a minimum of 40-50% clay particles comprise the lower soil profiles for each site. The management of clays in topsoil suitability poses another serious challenge for plant seed viability and plant growth at this site. Along with very slow permeability, lack of pore space, and their massive structural aggregates, certain types of clay minerals may repel vital plant nutrients. Recommendations I have to improve the physical properties of these high clay content materials include adding some of the waste rock from the coal wash process (sandier material) and using sewage sludge or other organic amendments to the topsoil stockpile to increase soil permeability, porosity, and decrease structural aggregations.

Conclusions

A soil survey of the Order 1 magnitude and soil characterizations for three soils representing the soil landscape variability were made at the Savage property proposed for settling ponds and coal wash water clarification. High dissolved salt contents, high sodium, and high clay contents are three of the more limiting properties of these soils with respect to topsoil salvage and plant regrowth. The results of this soil survey and laboratory analyses make recommendations for the salvage of as much as 26 inches of the topsoil at this site (less in certain areas) to be used as topsoil, and if possible amended in some way to improve aggregation of soil, and water and air movement properties. The use of sewage sludge, organic matter, and fine materials derived from coal wash waste rock are some possibilities suggestions by this contractor to improve topsoil conditions and perhaps allow for additional substitute soil borrowed from the site (up to 3 feet depth) to be used in future reclamation.

I recommend that a qualified soil scientist with soil identification experience be monitoring soil recovery in the field at time of topsoil removal/stockpile operations.

Bibliography

National Soil Survey Center. Lincoln, Nebraska. Soil Characterization Data. Website.

Personal Communications with Leland Sasser, NRCS Soil Scientist, Price Field Office
Personal Communications with Priscilla Burton, Soil Scientist DOGM, Price Utah
Personal Communications with Henry Sauer, Soil Scientist, Walsh and Associates.
Personal Communications with Bruce Webb. Director, BYU Soil and Plant Analysis Lab

Utah Division of Oil Gas and Mining. Price Field Office. October 2005. Guidelines for Management of Topsoil and Overburden. R645-301-200 Soils. 42 pages.

Saxton K. E. and W. J. Rawls. 2006. Website www.BSYSE>WSU>EDU/SAXTON/SOIL WATER. SPAW Model for Estimating Soil-Water Content from Textures.

Schoeneberger, P. J., D. A. Wysocki, E. C. Benham, and W. Broderson. September 2002. Field Book for Describing and Sampling Soils. Version 2.0. NRCS National Soil Survey Center. Lincoln, Nebraska.

Soil Survey of Carbon Area, Utah. USDA-SCS. 1988. Earl H. Jensen and James W. Borchert. 294 pages.

Soil Survey Staff. 2003. Soil Taxonomy, Ninth Edition. USDA-NRCS. US Government Printing Office. Washington D.C. 331 pages.

Soil Survey Staff. 1993. Soil Survey Manual. Agricultural Handbook 318. US GPO. Washington D.C. 4347 pages.

Soil Survey Staff. 2005, as amended. Internet version of National Soils Handbook.

APPENDIX 1. Soil Pedon Descriptions from SP-1, SP-2, SP-3

SP-1

SOIL DESCRIPTION

Soil Type: KILLPACK, CLAYEY SURFACE | File No.
Area: SAVAGE COAL TERMINAL | Date: 7/20/06 | Stop No.
Classification: FINESILTY USTIC TORRIORTHENT, MIXED, ACTIVE, CALCAREOUS, MESIC
Location: Section T R
N. Veg.: SHADSCALE W/ GREASEWOOD
Parent Material: ALLUVIUM OVER RESIDUUM | Climate (Precip.): USTIC
Physiography: FANSLOPES | Surface Rock Fragments Gravel: 0 → TR
Relief: SLIGHTLY CONVEX | Drainage: SPD | Surface Rock Fragments Cobble: 0
Elevation | Gr.water: NONE | Surface Rock Fragments Stones: 0
Slope: 2 | Range: 1-3% | Moisture: — | Surface Rock Fragments Other: 0
Aspect/Degrees: 40° | Root Distr. | % Clay *PSCS: >35 (Est)
Erosion: NONE → SLIGHT | % Coarse fragments *PSCS: 0 | % Coarser than V.F.S. *PSCS: <20
Permeability: SLOW | Range Site
GPS Latitude N: 12 S 0519190 | Microbiotic Crust Class: NONE
GPS Longitude W: UTM 4375819 | Rock Formation/Type: MANCOS SHALE
GPS Elevation: 1666 M. | Topo Quad Name
Soil Temp at 20" F: NOT MEASURED | Photo Number

Additional Notes: SECONDARY DEPOSITS OF GYPSUM AND CALCIUM CARBONATES COMMON
COAL DUST FINES ERRATICALLY OCCUR ON SURFACES < 1 INCH DEPTH
PHOTOS 1 + 2 PEDON AND LANDSCAPE

BRUCE CHESLER DESCRIBER
BACKHOE PIT 4½ FEET DEEP
FIELD / LAB
*Control Section Average

Horizon	Depth (Inch)	Color Dry	Color Moist	Texture Clay	Structure	Consistence Dry	Consistence Moist	Consistence Wet	Reaction Effer.	Boundary	Rock Frags	Root	Pore	Ped Surface Features
A	0-4	10YR 6/2	2.5Y 4/3	CLAY / 51	2CPL → MGR	SH	FI	S P	VE	CS	TR COAL FINE + SS	2VF	2VF + VI 2F.	
C1	4-12	2.5Y 6/2	2.5Y 4/3	SICL / 30	2C-M SBK	SH	FI	S P	VE	CW	/	VF	2VF I	GYSUM + CACO3 FILAMENTS
C2	12-26	2.5Y 7/1	2.5Y 4/2	SICL / 31	3C SBK	HA	VFI	S P	VE	GW	/	VF	VF. IF+VI	GYPSUM XTLS CACO3 NODES AND FILAMENTS
CY	26-35	5Y 7/2	5Y 5/3	SICL / 33	3C-M SBK	VH	VFI	S P	VE	G.S	10 SHALE FRAGS	/	/	GYPSUM CRYSTALS & SHALE FRAGS
Cr	35+	35-50% WEATHERED OLIVECOLORED SHALE BEDROCK												

SP-2

SOIL DESCRIPTION

Soil Type	BILLINGS, MOIST PHASE		File No.
Area	SAVAGE COAL TERMINAL	Date 7/20/06	Stop No.
Classification	FINE-SILTY TYPIC TORRIFLUVENT, MIXED ACTIVE, CALCAREOUS MESIC		
Location: Section	T R		
N. Veg.	GREASEWOOD		
Parent Material	ALLUVIUM		Climate (Precip.) USTIC
Physiography	TOESLOPE		Surface Rock Fragments Gravel 0
Relief	PLANAR	Drainage POORLY DRAINED	Surface Rock Fragments Cobble 0
Elevation		Gr.water NONE APPARENT	Surface Rock Fragments Stones 0
Slope 1	Range 1-2%	Moisture YES, BELOW 48"	Surface Rock Fragments Other 0
Aspect/Degrees 50°		Root Distr.	% Clay *PSCS >40% (EST)
Erosion NONE		% Coarse fragments*PSCS 0	% Coarser than V.F.S.*PSCS <20%
Permeability SLOW		Range Site	
GPS Latitude N 0519259		Microbiotic Crust Class NONE	
GPS Longitude W 4375852		Rock Formation/Type MANCOS	
GPS Elevation 1676 M		Topo Quad Name PRICE	
Soil Temp at 20" F		Photo Number	

Additional Notes BACKHOE PIT 8 FEET DEEP OBSERVED BRUCE CHESTER DESCRIBED

SOIL MOIST FROM 48-96 INCHES

SECONDARY GYPSUM AND CALCIUM CARBONATES COMMON IN SOIL

*Control Section Average

Horizon	Inches Depth	Color Dry	Color Moist	Texture Clay	Structure	Consistence Dry	Consistence Moist	Consistence Wet	Reaction Effer.	Boundary	Rock Frags	Root	Pore	Ped Surface Features
A1	0-6	2.5Y 5/1	2.5Y 3/2	si cl / 29*	3 M,C SBK → MGR	VH	FI	S P	VE	CS	/	VF IF IM	2VF i 2F tu	PLATY STRUCTURE
A2	6-12	2.5Y 6/3	2.5Y 4/3	si cl / 29	3 C-M SBK	VH	FI	S P	VE	CS	/	VF IF IM	VF i IF tu	
C1	12-24	2.5Y 6/2	2.5Y 4/2	si cl / 33	3 C SBK	VH	VFI	S P	VE	GW	/	VF	VF tu, i	FEW VFAINT MOTTLES, ROOT CLAY
Cy1	24-48	2.5Y 6/3	2.5Y 5/2	si cl / 32	3 C SBK	VH	VFI	S P	VE	GW	/	/	VF i	GYSUM & CACO3 FILAMENTS
Cy2	48-72	5Y 5/2	5Y 4/1	si cl / 30	MASSIVE	EH	EFI	S P	VE	DW	/	/	VF T	GYSUM CRYSTALS
Cy3	72-96	5Y 6/2	5Y 5/3	si c / 47	MASSIVE	EH	EFI	VS VP	SE		/	/	/	GYPSUM CRYSTALS
		* LAB ANALYSIS		54% CLAY		0-6" DEPTH								

SP-3

SOIL DESCRIPTION

Soil Type	BILLINGS ERODED PHASE		File No.
Area	SAVAGE COAL TERMINAL	Date 7-21-06	Stop No.
Classification	FINE-SILTY USTIC TORRIFLUVENT, MIXED, ACTIVE, CALCAREOUS, MESIC		
Location: Section	T R		
N. Veg.	MATTED SALTBRUSH, WEEDS, GREASEWOOD		
Parent Material	ALLUVIUM, RESIDUUM FROM SHALE	Climate (Precip.)	USTIC
Physiography	FANSLOPE	Surface Rock Fragments Gravel	0
Relief	SL. CONCAVE → UNDULATING	Drainage PD	Surface Rock Fragments Cobble 0
Elevation		Gr.water NONE	Surface Rock Fragments Stones 0
Slope 2%	Range 1-2	Moisture BELOW 36"	Surface Rock Fragments Other 0
Aspect/Degrees 60		Root Distr. 0-12"	% Clay *PSCS > 40%
Erosion	SLIGHT - MODERATE	% Coarse fragments*PSCS 0	% Coarser than V.F.S.*PSCS < 20%
Permeability	SLOW RILL EROSION	Range Site	
GPS Latitude N	0519252	Microbiotic Crust Class	NONE
GPS Longitude W	4375912	Rock Formation/Type	MANCOS SHALE
GPS Elevation		Topo Quad Name	
Soil Temp at 20" F		Photo Number	

Additional Notes: BACKHOE PIT 5+ FEET DEEP DESCRIBED BY BRUCE CHESLEY

POSSIBLY CLASSIFIED SAGERS SERIES IF THE SITE IS UPLAND

SOIL SURFACE CRACKS + SUBSIDENCE APPARENT W/ CHEMICAL SOIL CRUSTS

SMALL 1/2-1' ARROYOS DISSECT LANDSCAPE W → E DIRECTION

*Control Section Average

Horizon	Inches Depth	Color Dry	Color Moist	Texture Clay	Structure	Consistence Dry	Consistence Moist	Consistence Wet	Reaction Effer.	Boundary	Rock Frags	Root	Pore	Ped Surface Features
A	0-6	2.5Y 5/3	2.5Y 4/2	SiL K / 27	3M-C SBK → MGR	SH	FR	SS PS	VE	CS	/	VF IF	2VF 1F IN	SOME PLATY SFC STRUCTURES CHEMICAL CRUST SFC CRACKS
A	6-12	2.5Y 5/2	2.5Y 4/3	SiCL /	3M-C ABK	HA	FI	S P	VE	CW	/	VF	1FT 1VF IN	CACO3 FILAMENTS + DISSEMINATE
C1	12-24	2.5Y 6/3	2.5Y 4/2	SiCL / 32	3MC SBK	HA	VFI	S P	VE	CW	/	/	VF-F IN	GYPSUM CRYSTAL CACO3 NODULES & FILA MEN
C2	24-48	5Y 5/2	5Y 4/2	SiC / 42	MASSIVE	VH	EFI	VS VP	VE	GW	/	/	/	CACO3 FILAMENTS MOIST
C1	48-60+	5Y 6/2	5Y 5/3	SiC / 49	MASSIVE	EH	EFI	VS VP	SE		/	/	/	GYPSUM CRYSTALS MOIST-WET
		* LAB MECHANICAL ANALYSIS (48% CLAY)												

BYU Soil Sample Site Laboratory Analysis SAVAGE LOADOUT SITE

													Cations (mg/kg)					
Sample Site	Soil Depth (in.)	Lab #	Sand (%)	Clay (%)	Silt (%)	vfsand %	USDA tex	Saturation %	pH	EC (mmhos/cm)[1]	$CaCO_3$	Total Organic Carbon %	Soluble meq/L Ca	Soluble meg/L Mg	Soluble meg/L K	Soluble meg/L Na	mg/Kg P	mg/Kg NO3-N
A SP-1	0-4	975.00	21.00	51.28	27.72	14.80	clay	46.51	7.77	3.30	24.25	1.80	21.94	4.69	0.62	24.15	5.35	8.77
C1 SP-1	13-Apr	976	16.92	53.28	29.80	11.68	silty clay	44.04	7.69	3.60	24.47	0.70	140.09	7.47	0.47	15.03	6.43	9.11
SP-1	13-26	977	no data	no data	ND	ND		46.52	8.01	8.50	21.90	0.40	25.16	28.59	0.16	63.44	2.45	14.28
SP-1	26-35	978	ND	ND	ND	ND		50.38	8.22	9.50	17.89	0.30	25.93	44.59	0.17	130.43	0.36	12.00
CR SP-1	35 plus	979	ND	ND	ND	ND		53.02	7.99	10.00	9.36	0.01	22.56	45.23	0.23	83.48	0.25	18.43
SP-2	0-6	980	17.28	54.28	28.44	12.56	silty clay	43.96	7.67	4.60	23.77	1.70	28.80	7.04	0.01	22.04	6.43	17.16
SP-2	6--12	981	no data	no data	no data	no data		55.95	7.70	4.60	21.24	0.70	30.17	10.03	0.23	22.59	3.13	7.42
SP-2	12--24	982	ND	ND	ND	ND		49.03	7.91	8.00	22.92	0.20	27.65	33.49	0.20	58.10	3.48	8.39
SP-2	24-48	983	ND	ND	ND	ND		58.82	8.55	9.50	16.56	0.02	17.96	146.56	0.24	73.46	0.03	8.69
SP-2	48-72	984	ND	ND	ND	ND		60.80	8.55	10.10	17.05	0.06	17.15	142.93	0.42	172.52	2.79	1.03
SP-2	72-96	985	ND	ND	ND	ND		59.09	8.53	5.10	17.32	0.02	17.03	138.88	0.58	278.26	4.99	4.62
SP-3	0-6	986	14.28	48.56	37.16	10.12	silty clay	50.85	8.30	14.00	20.71	1.00	25.85	6.83	1.01	161.74	7.78	28.32
SP-3	6 to 12	987	no data	no data	no data	no data		62.89	8.63	20.00	19.91	0.40	20.94	10.24	0.40	461.22	9.94	1.03
SP-3	12 to 24	988	ND	ND	ND	ND		63.79	8.68	30.00	17.95	0.07	17.82	33.92	0.33	439.65	1.34	20.61
SP-3	24-48	989	ND	ND	ND	ND		66.82	8.76	30.00	20.70	0.03	16.83	172.80	0.74	745.74	1.23	10.42
SP-3	48-72	990	ND	ND	ND	ND		69.06	8.67	30.50	22.51	0.02	16.50	160.21	0.56	617.74	2.68	3.36

Table 1 - Soil Chemical and Textural Properties at SAVAGE LOADOUT SITE

																	Cations (mg/kg)					
Sample Site	Soil Depth (in.)	Lab #	Sand (%)	Clay (%)	Silt (%)	vfsand %	USDA tex	Saturation %	pH	EC (mmhos/cm)[4]	$CaCO_3$	Total Organic Carbon %	SAR	Est. K Factor	AWC %		Soluble meq/L Ca	Soluble meg/L Mg	Soluble meg/L K	Soluble meg/L Na	mg/Kg P	mg/Kg NO3-N
SP-1	0-4	975	21.00	51.28	27.72	14.80	clay	46.51	7.77	3.30	24.25	1.80	6.62	0.32	12.00		21.94	4.69	0.62	24.15	5.35	6.77
SP-1	4 to 13	976	16.92	53.28	29.80	11.68	silty clay	44.04	7.69	3.60	24.47	0.70	1.75	0.28	14.00		140.09	7.47	0.47	15.03	6.43	9.11
SP-1	13-26	977	no data	no data	ND	ND		46.52	8.01	8.50	21.90	0.40	12.25	0.28	14.00		25.16	28.59	0.16	63.44	2.45	14.28
SP-1	26-35	978	ND	ND	ND	ND		50.38	8.22	9.50	17.89	0.30	21.29	0.28	14.00		25.93	44.59	0.17	130.43	0.36	12.00
SP-1	35 +	979	ND	ND	ND	ND		53.02	7.99	10.00	9.36	0.01	14.34	0.28	14.00		22.56	45.23	0.23	83.48	0.25	18.43
SP-2	0-6	980	17.28	54.28	28.44	12.56	silty clay	43.96	7.67	4.60	23.77	1.70	5.21	0.32	14.00		28.80	7.04	0.01	22.04	6.43	17.16
SP-2	6--12	981	no data	no data	no data	no data		55.95	7.70	4.60	21.24	0.70	5.04	0.28	14.00		30.17	10.03	0.23	22.59	3.13	7.42
SP-2	12--24	982	ND	ND	ND	ND		49.03	7.91	8.00	22.92	0.20	10.51	0.28	14.00		27.65	33.49	0.20	58.10	3.48	8.39
SP-2	24-48	983	ND	ND	ND	ND		58.82	8.55	9.50	16.56	0.02	8.10	0.28	14.00		17.96	146.56	0.24	73.46	0.03	8.89
SP-2	48-72	984	ND	ND	ND	ND		60.80	8.55	10.10	17.05	0.06	19.28	0.28	14.00		17.15	142.93	0.42	172.52	2.79	1.03
SP-2	72-96	985	ND	ND	ND	ND		59.09	8.53	5.10	17.32	0.02	31.52	0.28	14.00		17.03	138.88	0.58	278.26	4.99	4.62
SP-3	0-6	986	14.28	48.56	37.16	10.12	silty clay	50.85	8.30	14.00	20.71	1.00	40.02	0.32	14.00		25.85	6.83	1.01	161.74	7.78	28.32
SP-3	6 to 12	987	no data	no data	no data	no data		62.89	8.63	20.00	19.91	0.40	116.55	0.28	14.00		20.94	10.24	0.40	461.22	9.94	1.03
SP-3	12 to 24	988	ND	ND	ND	ND		63.79	8.68	30.00	17.95	0.07	86.44	0.28	14.00		17.82	33.92	0.33	439.65	1.34	20.61
SP-3	24-48	989	ND	ND	ND	ND		66.82	8.76	30.00	20.70	0.03	79.59	0.28	14.00		16.83	172.80	0.74	745.74	1.23	10.42
SP-3	48-72	990	ND	ND	ND	ND		69.06	8.67	30.50	22.51	0.02	65.72	0.28	14.00		16.50	160.21	0.56	617.74	2.68	3.36

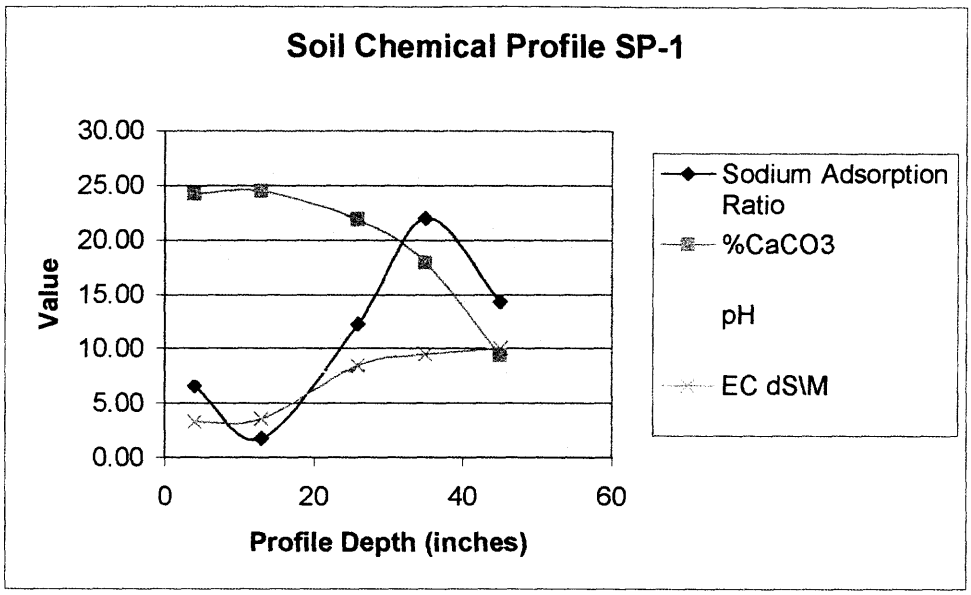

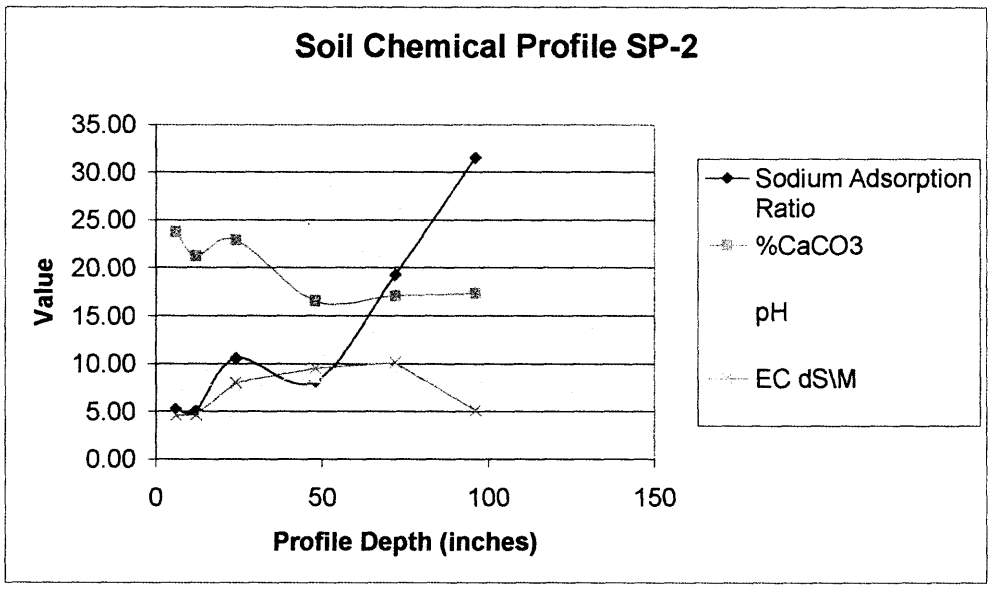

Figure 1

Soil Chemical Profiles, At Savage Loadout sites SP-1, SP-2

courtesy of Henry Sauer, Soil Scientist, Walsh and Associates, Inc.

FIGURE 2. Soil Chemical Profile for SP-3, Savage Loadout Site

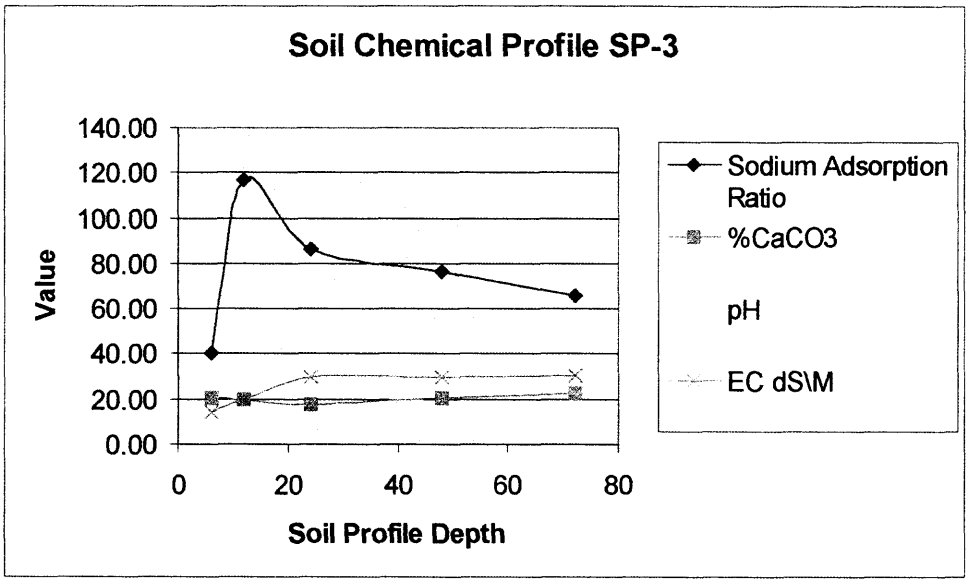

Graph courtesy of Henry Sauer, Soil Scientist, Walsh and Associates, Inc.

APPENDIX 1
PEDON SP-3 PHOTOGRAPHS including landscape position

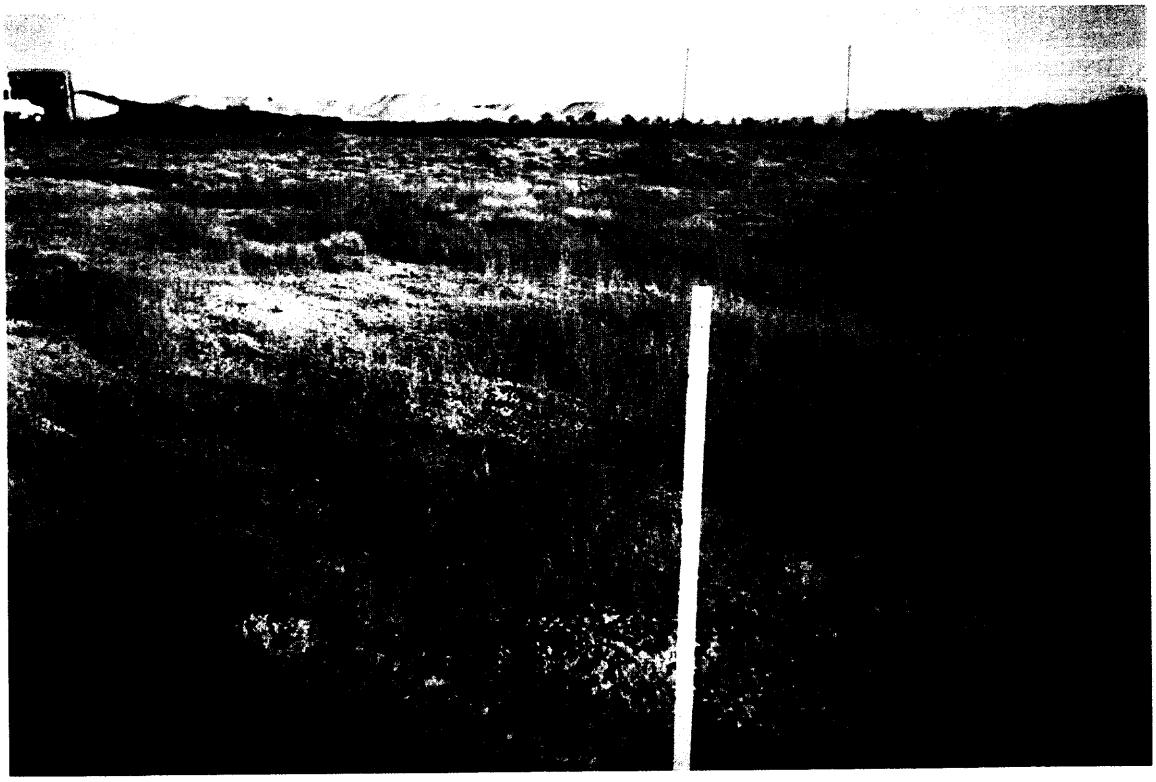

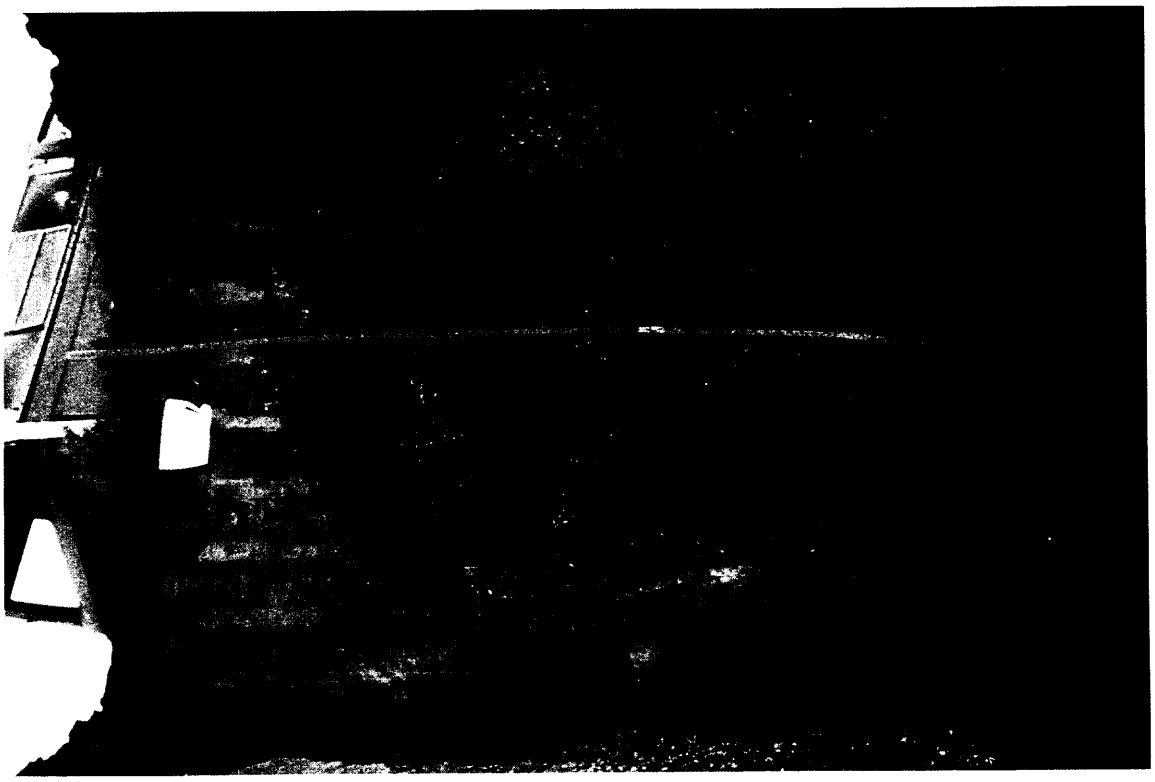

APPENDIX 1
PHOTOGRAPHS OF SP-2, with geographic setting

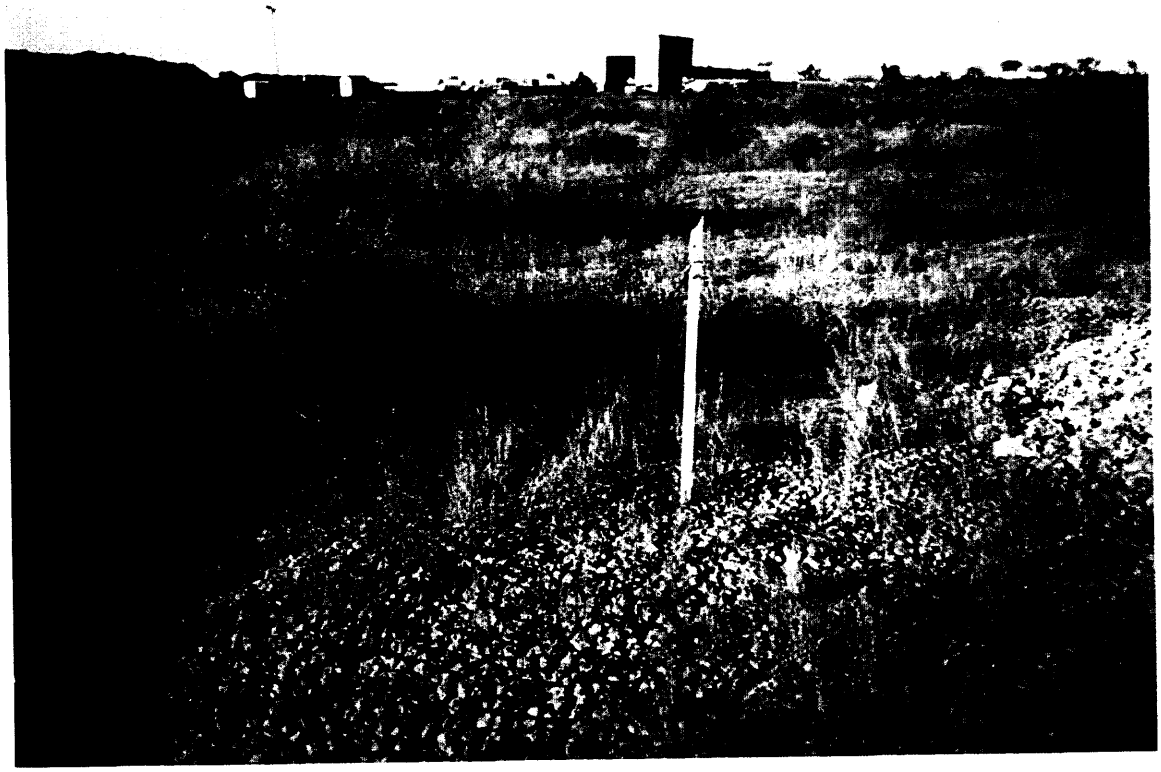

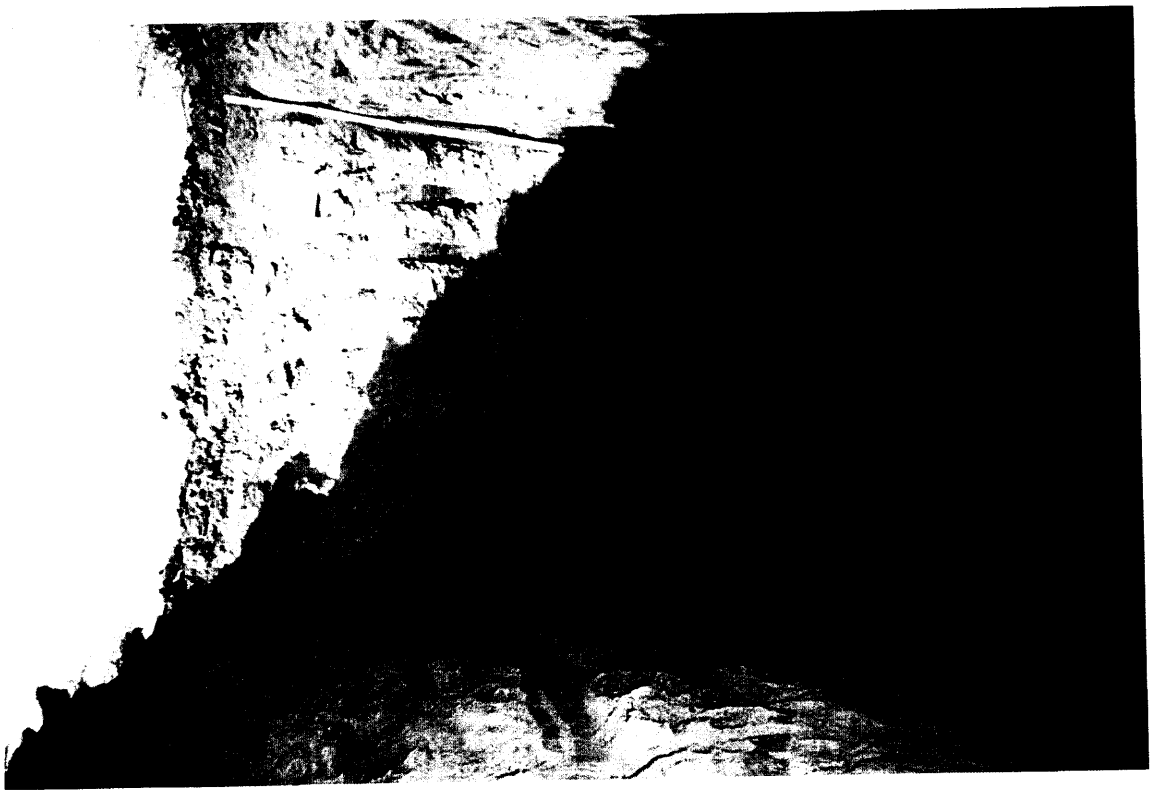

APPENDIX 1.
PHOTOGRAPHS of PEDON SP-1, with landscape position

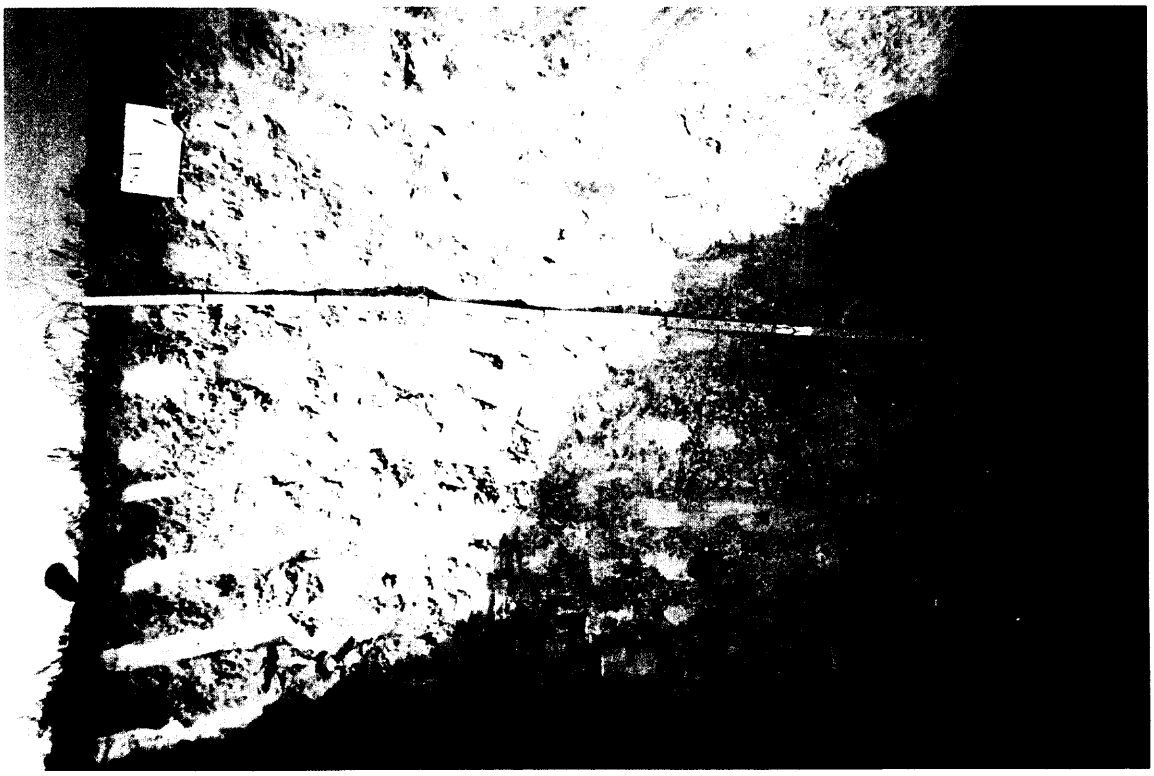

FIGURE 1. SOIL SALVAGE MAP

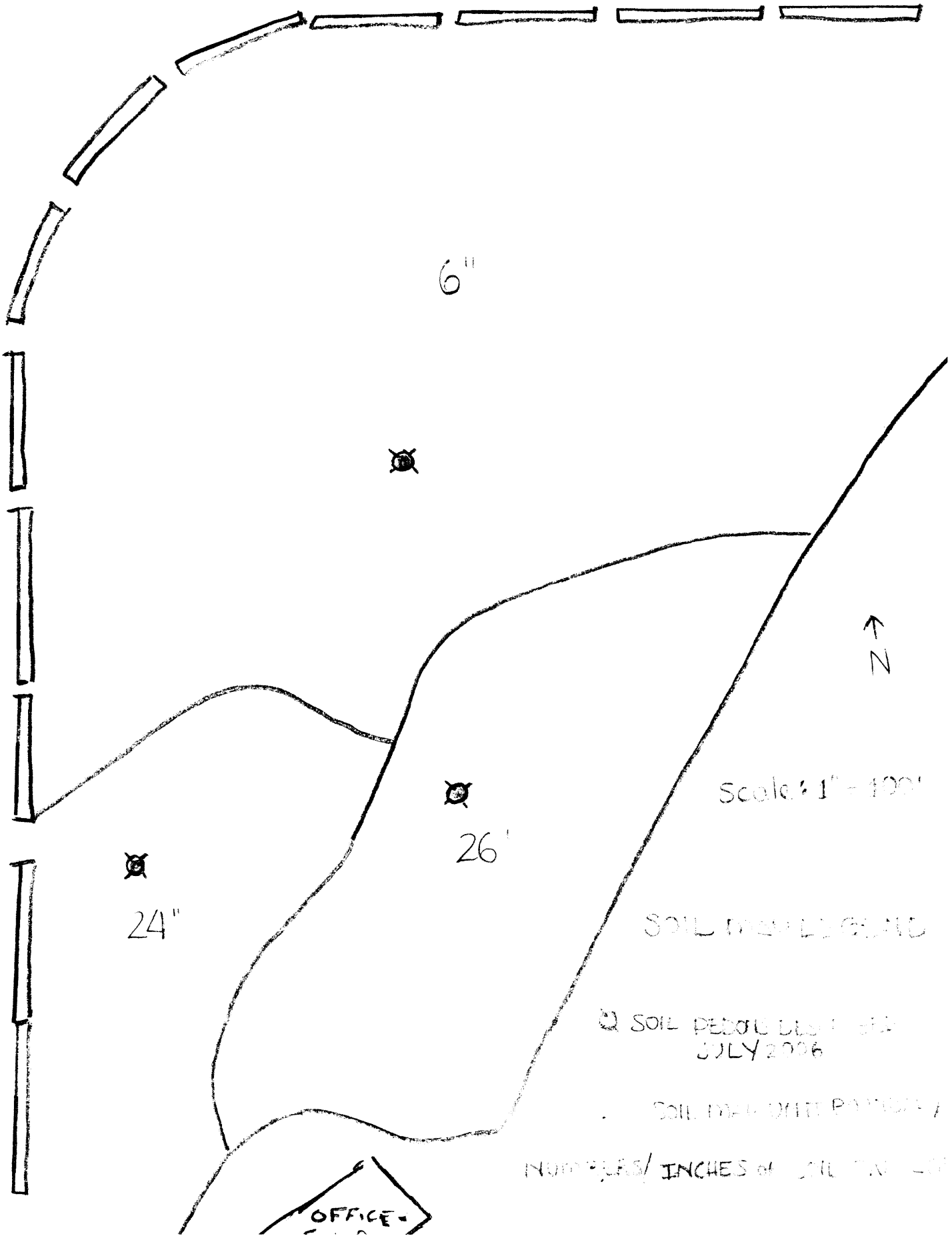

APPENDIX 7-5

Probable Hydrologic

Consequences Determination

Appendix 7-5
Probable Hydrologic
Consequences Determination

General

The original Probable Hydrologic Consequences Determination, or PHC, was developed for this site in 1983. At this time, the wash plant was operating full time and refuse was actively being deposited on site.

A series of groundwater monitoring wells were installed to monitor changes in water quality and levels. A sediment control plan was also developed to control surface runofff from the site. At that time, based on information provided in Chapter 7 of the MRP, it was determined that the proposed operation would not have an adverse impact on the hydrologic balance.

Since that time, a number of changes have taken place, including cessation of coal washing and refuse placement, and removal of all ground water monitoring wells after acquiring 18 years of data.

At this time, one more major change is proposed for the site. It is proposed to restart the wash plant, and install a series of settling ponds to remove -28 mesh material from the wash water. Refuse will once again be stored on-site, but only on a temporary basis, not to exceed 1 year from start-up.

Procedure

The PHC Determination is based on information provided in Chapter 7, which includes baseline and operational hydrologic data acquired since 1983.

Groundwater Hydrology

Existing Groundwater Resources

The Savage Coal Terminal is near the middle of Castle Valley, a broad featureless plain between the Wasatch Plateau to the west and the San Rafael Swell to the east. The facility is located on the middle Bluegate shale member of the Mancos Formation and is approximately 500 feet above the Ferron sandstone member of the Mancos Formation. The Bluegate member consists of dark blue-gray marine mudstone and acts as an aquitard. The upper 10 to 20 feet consists of weathered clays, occasional lenses and pods of gravelly residuum, and residual type silty clay loam soils characteristic of the weathered Mancos shale.

Regional Groundwater Hydrology

A water table does exist in some locations above the impermeable Bluegate shale. In the general area, this water table exists in the alluvium or weathered shale and gravelly ponds above the Bluegate shale. The water is of poor quality and accumulations of salt are found where the water table approaches the ground surface. Groundwater is not used for irrigation in the area because of its poor quality. The nearest springs or wells to the Savage Coal Terminal site are located close to the town of Wellington on the opposite side of the Price River. Five wells and one spring exist in the alluvium above the Bluegate shale in this area. These wells and springs are in a different drainage and are not associated with the Savage Coal Terminal site.

Mine Plan Area Aquifers

Monitoring wells were completed in the weathered material above the Bluegate shale. In addition several wells were completed in the Bluegate shale in order to test the hypotheses that the low permeability of this unit isolates the water table aquifer from groundwater in the Ferron sandstone or deeper formations.

A total of 13 monitoring wells were completed on this site from 1980 - 1982. The wells were consistently monitored through 1998, when the wells were approved to be deactivated and removed.

The measurements in the observation wells as recorded in Table 7-1 of Chapter 7 indicate that there is no regional ground water table at the site, although a perched water table exists at some locations on the site. The aerial extent of this perched water table could not be precisely determined from existing monitoring well network.

As previously mentioned, the observation wells were monitored for 18 years at this site. When the wells were finally approved for removal, 5 of the 8 remaining wells had been dry for more than 5 years, 2 wells showed some ground water which appeared to be recharged by the irrigation canal south of the site. Water from one of these wells is also evident as ground water in Sediment Pond No. 5. The last remaining well was in an irrigated field east of the site, on land not controlled by Savage Services Corporation.

When the facilities were first constructed in 1977 - 1978, ground water was present throughout the site, ranging in depths from 0' to 20' from the surface. A French Drain system was placed along the western and northern edge of the property to intercept a majority of the ground water, which appears to be recharged primarily by the irrigation canal systems located west of the property. This ground water is collected in a deep tank located at the northeastern corner of the property, and is regularly monitored as point CV-1W.

The French Drain has been in operation for approximately 28 years, and has been monitored on a regular basis. The inflow continues to range from 20 to 25 gpm. Water quality is poor - typical of ground water in this area - with TDS concentrations running approximately 10,000 mg/l.

Proposed Facilities

The primary change to the operation and hydrology will be the restart of the preparation plant, construction of 2 - 2 celled settling ponds, and temporary storage of refuse on site. The water supply system for the wash plant is already in place as is the refuse storage area. The area proposed for the new settling ponds has been checked for ground water, and none is evident to the proposed depth of the ponds. It should also be noted that previous tests of the coal refuse as well as ground water have shown it to be non-acid and non-toxic. The refuse to be temporarily stored on site from the new washing operation will also be checked on a regular basis for acid/toxic potential.

Effects of Operations on Groundwater

This site has been in operation for over 28 years with no negative impacts to the ground water. During this time, the site has had coal washing and refuse generating activities, as well as a long period of operating as a coal storage and loadout facility.

The only potential for negative impact from the proposed facilities would be from possible acid/toxic contamination of the groundwater from the coal or refuse. This potential will be minimized by regular testing of the refuse for acid/toxic potential, as well as regular monitoring of the groundwater.

Based on the past history of the site, and the proposed new operating and testing procedures, there should be no negative impact to the groundwater resources on this site.

Surface Water Hydrology

Regional Surface Water Hydrology

The regional area is drained by tributaries to the Green and Colorado Rivers; principal tributaries are the Price and San Rafael Rivers and Muddy Creek. The flow is usually intermittent or perennial, in small streams in the mountains and in larger streams that originate in the higher mountains. Snowmelt is major contributor to streamflow and it provides the continuity of flow in the perennial streams as well as some seasonal flow to intermittent streams. Many streams are ephemeral and flow only in direct response to precipitation or snowmelt. Ephemeral flow is characteristic of the lowlands such as Castle Valley where the Savage Coal Terminal facility is located. Summer precipitation does not usually produce much runoff, although intense rainfall may cause high runoff in localized areas.

The site drains into the Price River which flows into the Green River. The water in the upper reaches of the Price River is of high quality; however, as the river traverses the central and lower portion of the Price River basin, the quality of the water in the river steadily degrades due to the geologic nature of the area and to the irrigation return flow which enters the river.

Mine Plan Area Watersheds and Surface Runoff

For the purposes of computing surface runoff and designing water diversion and sediment control structures, the watershed associated with the Savage Coal Terminal site was divided into five subareas as shown on Figure 7-4 in Chapter 7. Subareas A and C are undisturbed areas and include upslope areas to the west of the site. The remaining subareas comprise drainage units that are affected by operations and are subject to sediment control. Surface runoff from subarea A is diverted around the site by a diversion. The remaining subareas drain into sedimentation ponds on site.

Runoff from the disturbed areas on site is directed to a series of 5 sediment ponds by a combination of collection ditches and culverts. All surface hydrologic structures are sized to carry runoff from a 10 year-24 hour storm event, including the storage capacity of the sediment ponds. Sediment Ponds 1, 2 and 3 are in series and flow to Sediment Pond 6. Sediment Pond 5 also flows to Sediment Pond 6. The water from Pond 6 is normally drawn into the pumphouse and pumped back to the wash plant for use in the wash cycle or as dust suppression water. In the event Pond 6 overflows, it is sampled according to the approved UPDES Discharge Permit.

The natural surface runoff in the area is of poor quality with total dissolved solids ranging from 2000 to 3000 mg/l. Surface runoff from most of the site occurs infrequently. Site discharges are even less frequent, with only 2 UPDES discharges within the last 5 years.

Proposed Facilities

The proposed restart of the wash plant, temporary refuse storage and settling ponds will have little, if any, effect on the surface water hydrology at the site. The wash plant will recirculate water, as well as use make-up water from the existing supply system and recirculated runoff water from the sediment ponds. The temporary refuse storage area will be within the existing refuse area, and will be drained by the existing refuse pile ditch to Sediment Pond 5. The new settling ponds will be incised with berms to prevent any inflow of surface runoff. The new disturbed area will drain to the existing disturbed ditch to Sediment Pond 1. The undisturbed area runoff will continue to be diverted around the property by a reconstructed diversion ditch.

Effects of Mining on Surface Water

Protection of the hydrologic balance at Savage Coal Terminal is accomplished by control of runoff from disturbed areas, diversion of runoff from undisturbed areas, and diversion collection and recirculation of water supply and storm water. There are no subsurface operations at this site.

In general, most of the disturbed area runoff, poor quality groundwater, and all plant overflow water is cleaned and recirculated with no discharge from the property. The natural (undisturbed) drainage is allowed to flow into natural channels, bypassing the disturbed areas. Excess french drain water may be released to the Price River. Storm water runoff from disturbed areas may also be released to the Price River once effluent limits have been met.

This site has been in operation for more than 28 years, with no negative impacts to surface water quality or quantity. The proposed new washing scenario is very similar to the original system on this site, and therefore, also should not have any negative effects.

It should be noted that the existing water monitoring program will continue to be implemented to evaluate any potential impacts of the operation.

PHC Determination

In accordance with R645-301-728.100, the proposed operation will not have a negative impact on quality and quantity of surface and ground water under seasonal flow conditions for the proposed permit and adjacent areas.

This determination is based on baseline hydrologic, geologic and 26 years of historical operating and monitoring data for this site.

The following findings are included in this PHC determination:

(1) There are no adverse impacts expected to occur to the gydrologic balance, based on historical data;

(2) No acid-forming or toxic-forming materials are known or expected to be present, based on past and on-going sampling;

(3) There are no expected impacts from the operation on sediment yield, quality parameters, flooding or streamflow alterations or water availability, as discussed in the previous text;

(4) Based on available data, the proposed operation will likely not proximately result in contamination, diminution or interruption of an underground or surface source of water within the proposed permit or adjacent areas which is used for domestic, agricultural, industrial or other legitimate purpose.