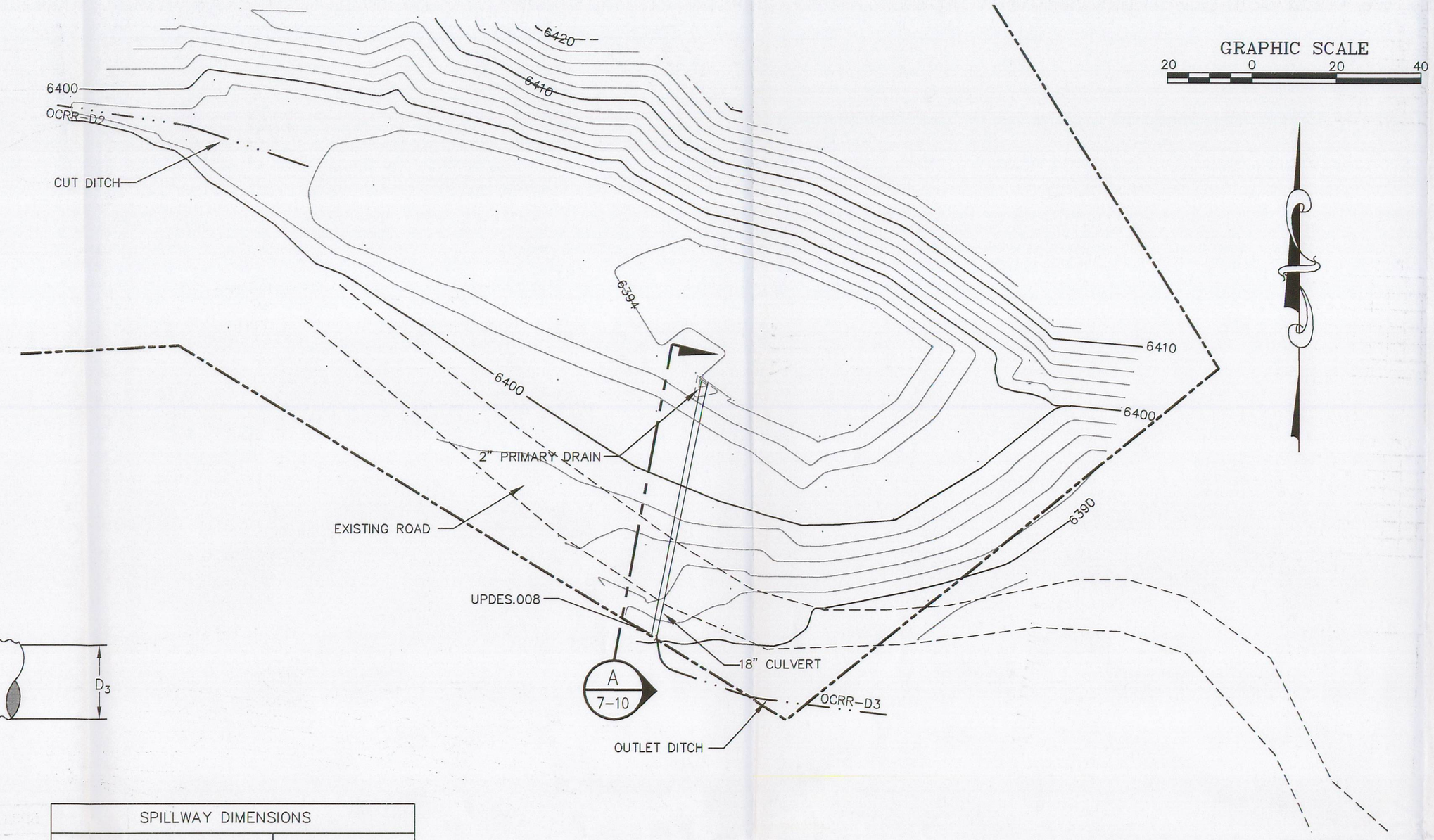

GRAPHIC SCALE

20 0 20 40

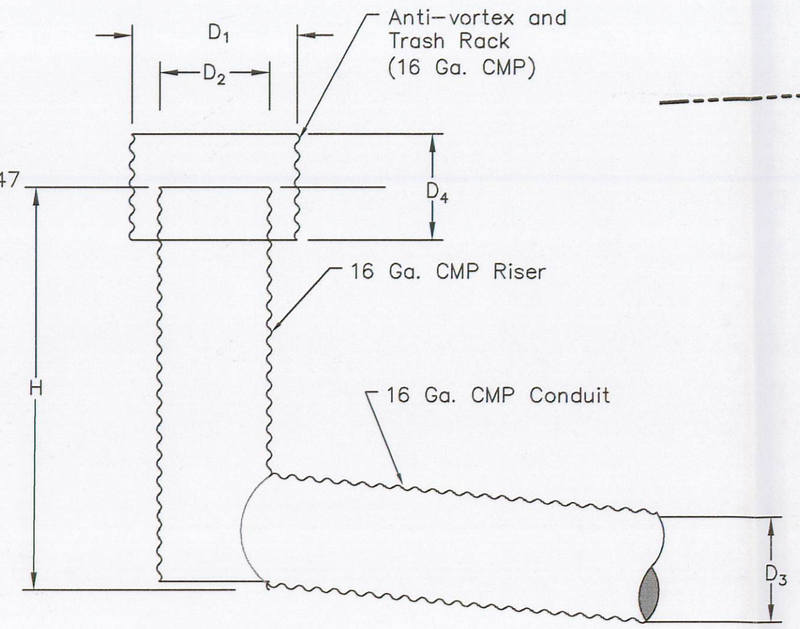

Riser Detail

N. T. S.

SPILLWAY DIMENSIONS		
	Primary Drain	Emergency
D_1		24"
D_2	2"	18"
D_3	2"	18"
D_4		18"
ELEV	6395.75	6399.4

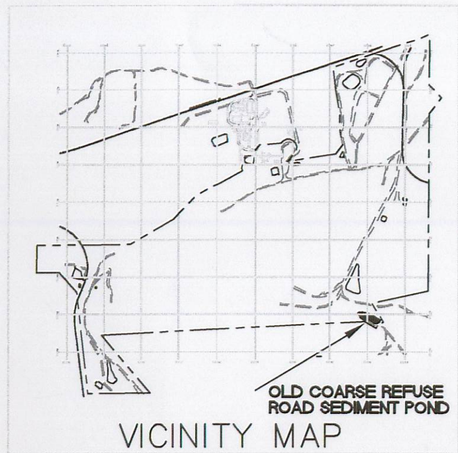

VICINITY MAP

ELEVATION (FT)	AREA (ACRES)	DISCHARGE (CFS)	STORAGE (AC-FT)
6394.00	.050	.00	.00
6395.00	.090	.00	.07
6396.00	.120	.00	.17
6397.00	.160	.00	.31
6398.00	.200	.00	.50
6399.00	.210	.00	.70
6399.40	.218	.00	.79
6399.50	.220	.57	.81
6399.60	.222	1.41	.83
6399.70	.224	2.50	.85
6399.80	.226	3.80	.87
6399.90	.228	5.27	.90
6400.00	.230	6.70	.92

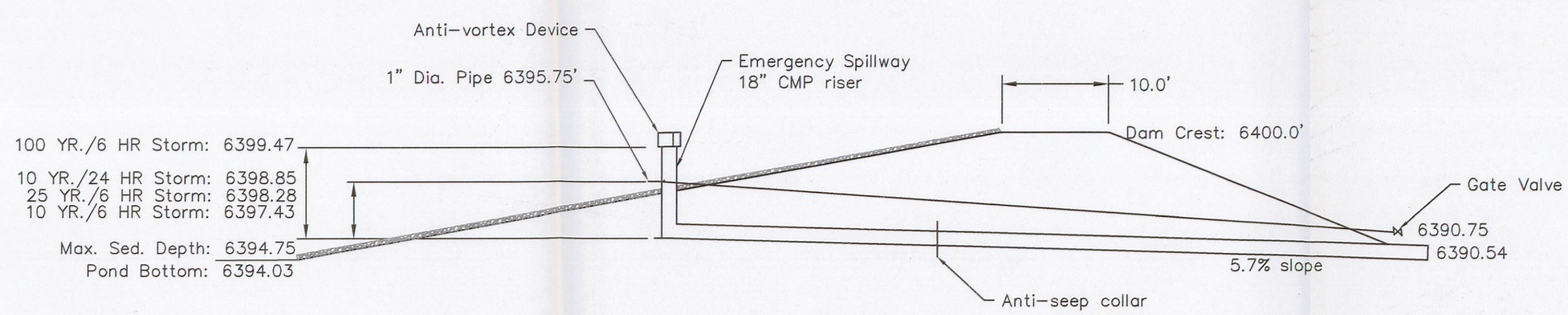

Section A

N. T. S.

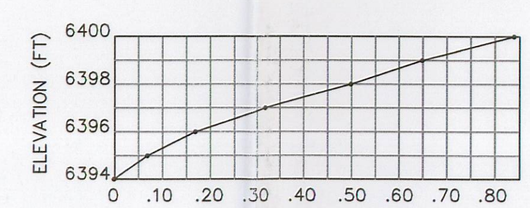

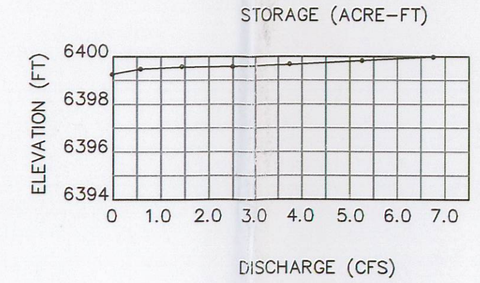

RECEIVED
OCT 18 2011
DIV. OF OIL, GAS & MINING

REV	DATE	DESCRIPTION	BY	APP'D
6	11/10	BOUNDARY AND TOPO UPDATES	AH	
5	9/02	PERMIT RENEWAL-UPDATES	PAM	
4	9/97	PERMIT RENEWAL-UPDATES	AH	
3	9/93	ADDITIONAL TOPO	AH	
2	8/93	STORAGE CALC. - CROSS SECTION	JWS	
1	5/93	RECORD DRAWING	CSC	

File in:
☐ Confidential
☐ Shelf
☒ Expandable
Date Folder 10/18/11 00700035

PROFESSIONAL ENGINEER No. 176 SCOTT S. CARLSON STATE OF UTAH

09-15-93

SCALE 1" = 20'

PROJECT NO. -

Sunnyside Cogeneration Associates
OLD COARSE REFUSE ROAD
SEDIMENT POND RECORD DRAWING

TWIN PEAKS
Engineering & Land Surveying
2264 NORTH 1450 EAST LEHI, UTAH 84043
(801) 450-3511, (801) 439-0700 FAX

DESIGNED AH
DRAWN AH
CHECKED SSC

SHEET 7-10

PLOTTED DATE: Thursday, 03 February 2011 - 1:11pm