APPENDIX 3.7G

AS-BUILT SEDIMENTATION POND CALCULATIONS

REGISTERED PROFESSIONAL ENGINEER
NO. 11350
WILLIAM S. HENDRICKSON
STATE OF UTAH

APPENDIX 3.7G

POND 15 STAGE-CAPACITY DATA

STAGE	ELEVATION (FT)	AREA (FT^2)	INCREMENTAL VOLUME (FT^3)	CUMULATIVE VOLUME (FT^3)
Bottom	89.2	2,312		0
			1,968	
	90.0	2,608		1,968
			2,854	
	91.0	3,100		4,822
			3,350	
	92.0	3,600		8,172
			3,716	
	93.0	3,832		11,880
			4,380	
	94.0	4,928		16,268
			5,282	
	95.0	5,636		21,550
			5,776	
	96.0	5,916		27,326
			6,460	
	97.0	7,004		33,786
			7,354	
	98.0	7,704		41,140
			1,558	
Primary Spillway	98.2	7,871		42,698
			6,564	
	99.0	8,540		49,262
			5,285	
Emergency Spillway	99.6	9,076		54,547
			3,685	
	100.0	9,348		58,232
			7,737	
Top of Embankment	100.8	9,994		65,969

APPENDIX 3.7 G
CRANDALL CANYON
POND 015
OPERATIONS PHASE
AS-CONSTRUCTED

ACCORDING TO CAROL'S CALCS (EARTHFAX, APRIL '90),

RUNOFF VOLUME = 22,841 CF (10-YR, 24-HR STORM, P = 1.9")

3 YR SEDIMENT VOL = 4050 CF

POND CAPACITY = 42,698 CF @ PRIMARY SPILLWAY

SO
42,698
- 22,841
17,857 AVAILABLE SEDIMENT STORAGE

17,857 >> 4050 OK POND IS ADEQUATE TO CONTAIN 10-YR, 24-HR STORM

ACCORDING TO STAGE CAPACITY CURVE,

17,857 CF ⇒ 94.7 MAX. SEDIMENT LEVEL

(.60)(17,857) = 11,914 CF

11,914 ⇒ 93.0 = SEDIMENT CLEANOUT LEVEL

APPENDIX X 37 G

GRANDALL CANYON
POND 015
OPERATIONS PHASE: AS-CONSTRUCTED
STAGE CAPACITY CURVE

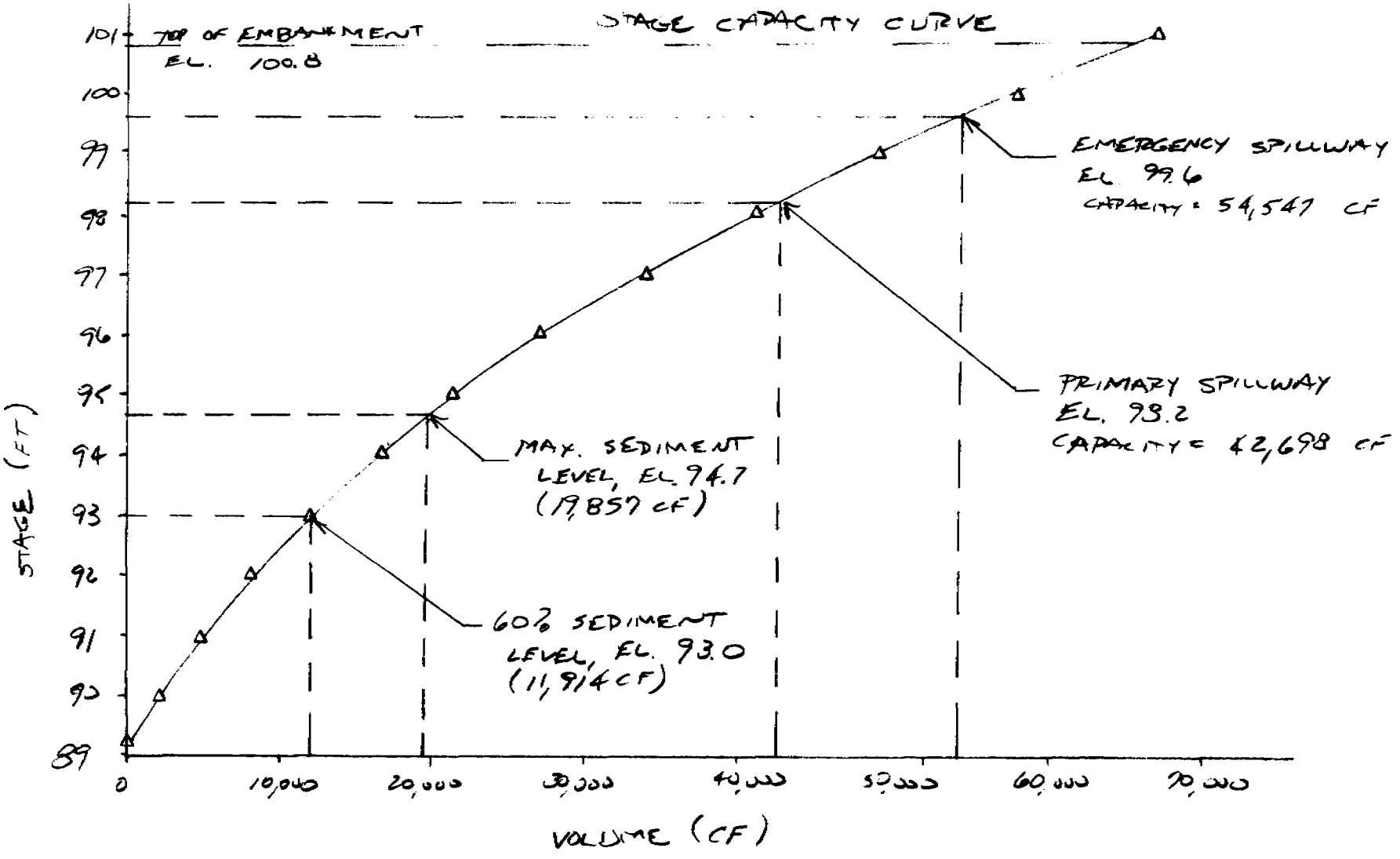

/11-91

STAGE-VOLUME DATA
FOR
POND 015

STAGE	ELEVATION	Area ft²	VOLUME (Cu. Ft.)	ACC. VOL. (Cu. Ft.)
Bottom	89.2	2060	-	-
	90.0	2580	4,176	4,176
	92.0	3660	6,140	10.316
Max. Sed. (3 Yrs.+)	94.0	4920	8,480	18,796
	96.0	6220	11,140	29,936
	98.0	7600	13,820	43,756
Principle Overflow	98.2	7710	1,531	45,287
Emergency Spillway	99.6	8740	11,515	56,802

Top Berm = 101.00

STAGE-VOLUME
POND 015

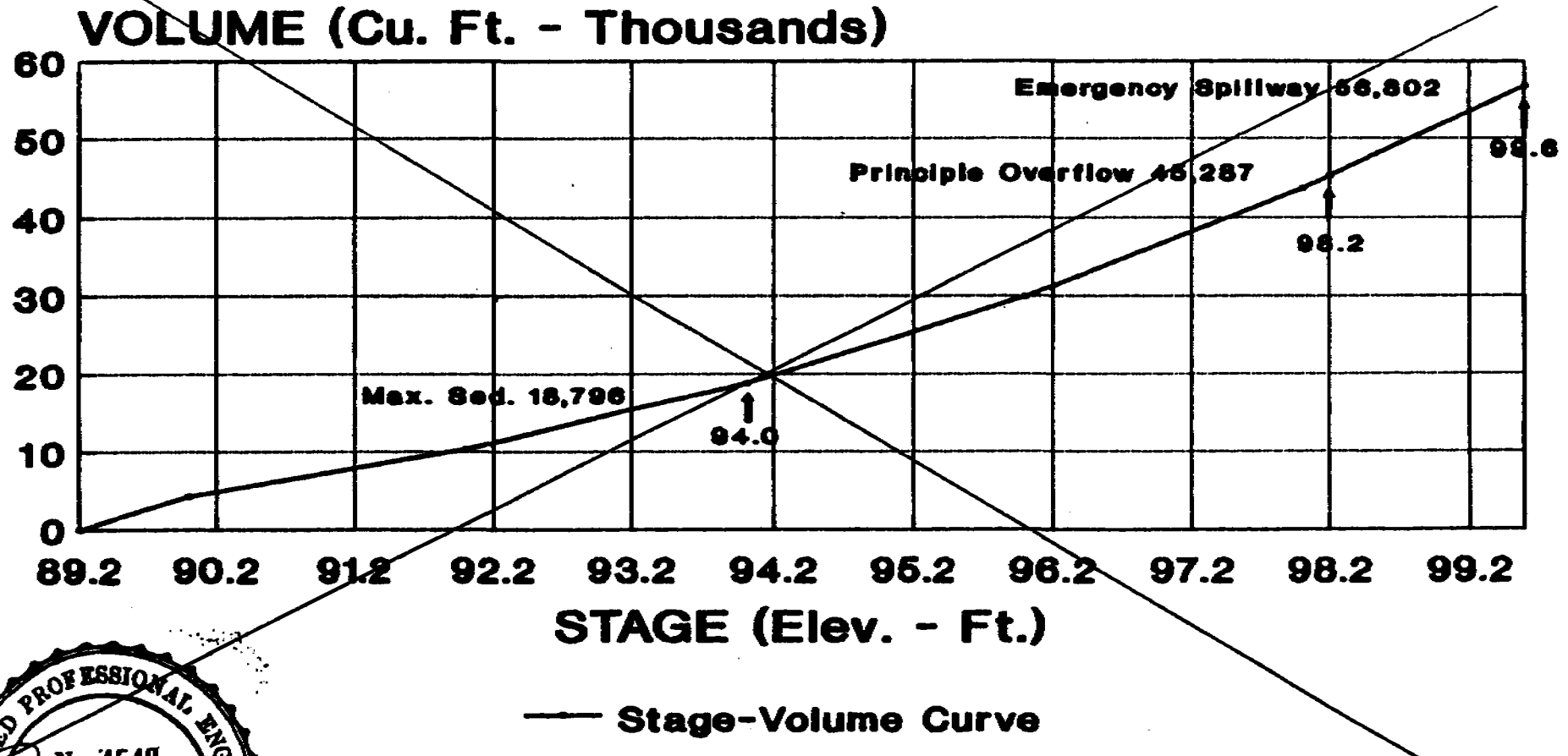

REGISTERED PROFESSIONAL ENGINEER
No. 4548
DAN W. GUY
11/25/91
STATE OF UTAH

11-91

SEDIMOT II INPUT = (pond 015)

~~Disturbed watershed~~ ⇒ CCWS-D1

- 25-year 24-hour Storm = 2.3 inches
- Curve No = 90 (disturbed area)
- Area = 6.23 Acres
- Calculate T_c =

$$\% \text{ Slope} = \frac{6930 - 6840}{1460'} \times 100 = 6.2\% = Y$$

$$\text{Hyd. length} = 1460' = l$$

$$S = \frac{1000}{CN} - 10 = 1.11$$

$$L = \frac{l^{0.8}(S+1)^{0.7}}{1900\, Y^{0.5}} = \frac{(1460)^{0.8}(2.11)^{0.7}}{1900\sqrt{6.2}} = 0.121 \text{ hr}$$

$$T_c = 1.67\, L = \underline{\underline{0.20 \text{ hr}}}$$

- Use SCS Type II distribution.

- Note: Use sedimentology option of SEDIMOT II only to permit routing of the hydrograph through the pond. Since sediment contributions from the 25-year 24-hour event are not of concern, the sediment rates were suppressed. Although computations are irrelevant, the program does require sediment input. Thus →

- Specific gravity of eroded sediment = 2.50
- Coef. for distributing sed load = 1.5
- Submerged bulk spec. grav = 1.25 (fine to med).

EARTHFAX ENGINEERING, INC.
ENGINEERS / SCIENTISTS

PROJECT _____ PAGE _____ OF _____
COMPUTED _____ DATE _____
CHECKED _____ DATE 3.76

- Grain size distribution :

Size (mm)	% Finer
0.25	100
0.10	50
0.05	35
0.01	19
0.005	15
0.001	6
0.0001	0

} 7 values

- No. of Structures → 1 (Sed. pond)
- Between Structures routing parameters → all Ø (no upstream structures or junctions)
- No. of Subwatersheds = 1
- MUSLE data → zeros (not calculating Sed yield)
- % dead Space → say 20% (not calculating detention times for this event!)
- Outflow withdrawal → surface
- Inflow vertical Concentration → Completely mixed
- Enter Stage data assuming Sediment Storage at Max level.

- Barrel dia = 18"
- Riser dia = 18"
- Entrance loss coef = 1.0
- Bend loss coef = 0.5
- Pipe length = 57.6'
- Weir flow coef = 3.1
- Orifice flow coef = .6
- Manning's n = .024
- Drop between pipe inlet + outlet = 11.7'

Run SEDIMOT II :

SEDIMOT II Assumes the pond is full of water (to the primary Spillway) when the storm event begins. My methodology is to accept this initially and route the storm through the spillway. If the max. stage is at least 4.0 foot below the top of the embankment (required freeboard) then the pond is OK. (with a large factor of safety)

If the freeboard is less than 1.0 foot, I re-run the calculations assuming the pond is EMPTY (of H_2O) when the storm begins. This is accomplished in SEDIMOT II by input of a stage-discharge curve, assuming a very small discharge (say .01 ft^3/sec) from the top of the sed. storage up to the spillway. At stages greater than the spillway, a discharge computed by the first SEDIMOT II run is used.

The assumption that the pond is empty of water is valid since, with time, most of it seeps through the embankment or is decant.

EARTHFAX ENGINEERING, INC.
ENGINEERS / SCIENTISTS

PROJECT _____ PAGE _____ OF _____
COMPUTED _____ DATE _____
CHECKED _____ DATE _____

POND 015 Spillway Results

① when pond is assumed to be full of water to primary spillway elevation =

Inflow runoff volume = .703 Ac-ft

Peak Inflow rate = 7.8 cfs
Peak Discharge rate = 5.8 cfs

Peak Stage = 6.13 Ft = Elev. 6837.63

∴ Freeboard = 9.87' = 10.4"

② when pond is assumed Empty of H_2O @ Max sediment level:

Inflow runoff volum = .703 Ac-ft

Peak Inflow rate = 7.8 cfs
Peak Discharge rate = 0.22 cfs

Peak Stage = 5.45 ft = Elev. 6836.95

∴ Freeboard = 1.55' = 18.7"

∴ pond 15 is OKAY

See attached computer output

Pond 15 - Sedimot II calculates Stage-Discharge Curve
Pond is assumed Full of H_2O to Spillway when storm begins.

```
*****************************************************************
                        -- SEDPC --
              SEDIMOT II MODEL FOR THE IBM PC/XT
              CONVERTED BY TECH ENGINEERING INC.
                 VERSION 1.10 NOVEMBER 17,1983
*****************************************************************


*****************************************************************
*****************************************************************

      UNIVERSITY OF KENTUCKY COMPUTER MODEL
      OF SURFACE MINE HYDROLOGY AND SEDIMENTOLOGY
      FOR MORE INFORMATION CONTACT THE AGRICULTURAL
      ENGINEERING DEPARTMENT

      THE UK MODEL IS A DESIGN MODEL DEVELOPED TO PREDICT
      THE HYDRAULIC AND SEDIMENT RESPONSE FROM SURFACE
      MINED LANDS FOR A SPECIFIED RAINFALL EVENT (SINGLE STORM)

      VERSION DATE 9-23-83

      DISCLAIMER: NEITHER THE UNIVERSITY NOR ANY OF ITS EMPLOYEES
      ACCEPT ANY RESPONSIBILITY OR LEGAL LIABILITY FOR THE
      CONCLUSIONS DRAWN FROM THE RESULTS OF THIS MODEL

*****************************************************************
*****************************************************************


*****************************************************************
*                                                               *
*     THE FOLLOWING VALUES ARE NOW PREDICTED BY SEDIMOT II.     *
*     THEY CAN BE FOUND IN SUMMARY TABLES.                      *
*      1. PERIOD OF SIGNIFICANT CONCENTRATION                   *
*      2. VOLUME WEIGHTED AVERAGE SETTLEABLE CONCENTRATION      *
*         DURING PERIOD OF SIGNIFICANT CONCENTRATION            *
*      3. VOLUME WEIGHTED AVERAGE SETTLEABLE CONCENTRATION      *
*         DURING PEAK 24 HOUR PERIOD                            *
*      4. ARITHMETIC AVERAGE SETTLEABLE CONCENTRATION           *
*         DURING PERIOD OF SIGNIFICANT CONCENTRATION            *
*      5. ARITHMETIC AVERAGE SETTLEABLE CONCENTRATION           *
*         DURING PEAK 24 HOUR PERIOD                            *
*                                                               *
*     ALL CONCENTRATIONS ARE IN ML/L.                           *
*                                                               *
*****************************************************************
```

****

WATERSHED IDENTIFICATION CODE

POND 15, 25-YEAR, 24-HOUR STORM, SEDIMOT II CALCULATES DISCHARGE CURVE

****

INPUT PARTICLE SIZE-PERCENT FINER DISTRIBUTIONS

SIZE,MM	.250	.100	.050	.010	.005	.001
	.000					
PCT FINER NO. 1	100.000	50.000	35.000	19.000	15.000	6.000
	.000					

**********INPUT VALUES**********

STORM DURATION	=	24.00	HOURS
PRECIPATION DEPTH	=	2.30	INCHES
SPECIFIC GRAVITY	=	2.50	
LOAD RATE EXPONENT FACTOR	=	1.50	
SUBMERGED BULK SPECIFIC GRAVITY	=	1.25	

* *
JUNCTION 1, BRANCH 1, STRUCTURE 1
* *

*** HYDRAULIC INPUT VALUES FOR SUBWATERSHEDS ***

WATER SHED	AREA ACRES	CURVE NUMBER	TC HR	TT HR	ROUTING COEFFICIENTS K-HRS	X	UNIT HYDRO
1	6.23	90.00	.200	.000	.000	.00	1.0

*** SEDIMENT INPUT VALUES FOR SUBWATERSHEDS ***

WATER SHED	SEG NUM	SOIL K	LENGTH FEET	SLOPE PCT	CP VALUE	PART OPT	SURF COND
1	1	.00	.0	.00	.000	1.0	.0

* * * COMPUTED VALUES FOR INDIVIDUAL WATERSHEDS * * *

WATERSHED	PEAK FLOW (CFS)	RUNOFF (INCHES)	SEDIMENT TONS	DIAM (MM)	DELIVERY RATIO 1	DELIVERY RATIO 2
1	7.80	1.35	.00	.089	.949	1.000

NOTE: SEDIMENT DOES NOT INCLUDE POSSIBLE DEPOSITION BY DELIVERY RATIO 2

***** SUMMARY TABLE FOR TOTAL WATERSHED *****

RUNOFF VOLUME	=	.7029	ACRE-FT
PEAK DISCHARGE	=	7.8016	CFS
AREA	=	6.2300	ACRES
TIME OF PEAK DISCHARGE	=	12.00	HRS
BETA	=	1.0000	
RAINFALL EROSITIVITY FACTOR	=	29.51	EI UNIT
PEAK CONCENTRATION	=	.00	MG/L
PEAK SETTLEABLE CONCENTRATION	=	.00	ML/L
PEAK SETTLEABLE CONCENTRATION	=	.00	MG/L
TOTAL SEDIMENT YIELD	=	.0000	TONS
REPRESENTATIVE PARTICLE SIZE	=	.0001	MM
TIME OF PEAK CONCENTRATION	=	.00	HRS
PERIOD OF SIGNIFICANT CONCENTRATION	=	-24.70	HRS
VOLUME WEIGHTED AVERAGE SETTLEABLE CONCENTRATION DURING PERIOD OF SIGNIFICANT CONCENTRATION	=	.00	ML/L
VOLUME WEIGHTED AVERAGE SETTLEABLE CONCENTRATION DURING PEAK 24 HOUR PERIOD	=	.00	ML/L
ARITHMETIC AVERAGE SETTLEABLE CONCENTRATION DURING PERIOD OF SIGNIFICANT CONCENTRATION	=	.00	ML/L
ARITHMETIC AVERAGE SETTLEABLE CONCENTRATION DURING PEAK 24 HOUR PERIOD	=	.00	ML/L

* *

POND RESULTS

* *

***** CONTROL VARIABLES OPTIONS *****

FLOW	FRACTN	ISDO	NRHP	NSP	NCSTR
3	0	2	500	12	1

***** DROP SPILLWAY INPUTS *****

ENTRANCE LOSS COEFFICIENT	=	1.0000	
BEND LOSS COEFFICIENT	=	.5000	
WEIR COEFFICIENT	=	3.1000	
ORIFICE COEFFICIENT	=	.6000	
MANNING COEFFICIENT	=	.0240	
BARREL DIAMATER	=	18.00	INCHES
RISER DIAMETER	=	18.00	INCHES
LENGTH OF PIPE	=	57.60	FEET
VERTICAL HEAD DROP	=	11.70	FEET

***** BASIN GEOMETRY *****

STAGE (FT)	AREA (ACRES)	AVERAGE DEPTH (FT)	DISCHARGE (CFS)	CAPACITY (ACRES-FT)
.00	.000	.00	.00	.00
.10	.001	.05	.00	.00
.20	.082	.05	.00	.00
.50	.086	.35	.00	.03
1.50	.100	1.30	.00	.12
2.50	.114	2.21	.00	.23
3.50	.129	3.09	.00	.35
4.50	.145	3.93	.00	.49
5.40	.162	4.66	.00	.63
5.50	.164	4.74	.46	.64
6.50	.186	5.50	8.92	.82
7.00	.197	5.87	10.76	.91

Pond 15 - Input a stage-discharge curve.
Pond is assumed Empty of H_2O to max-sediment Level when storm begins.

```
*****************************************************************
                        -- SEDPC --
              SEDIMOT II MODEL FOR THE IBM PC/XT
              CONVERTED BY TECH ENGINEERING INC.
                 VERSION 1.10 NOVEMBER 17,1983
*****************************************************************


*****************************************************************
*****************************************************************

       UNIVERSITY OF KENTUCKY COMPUTER MODEL
       OF SURFACE MINE HYDROLOGY AND SEDIMENTOLOGY
       FOR MORE INFORMATION CONTACT THE AGRICULTURAL
       ENGINEERING DEPARTMENT

       THE UK MODEL IS A DESIGN MODEL DEVELOPED TO PREDICT
       THE HYDRAULIC AND SEDIMENT RESPONSE FROM SURFACE
       MINED LANDS FOR A SPECIFIED RAINFALL EVENT (SINGLE STORM)

       VERSION DATE 9-23-83

       DISCLAIMER: NEITHER THE UNIVERSITY NOR ANY OF ITS EMPLOYEES
       ACCEPT ANY RESPONSIBILITY OR LEGAL LIABILITY FOR THE
       CONCLUSIONS DRAWN FROM THE RESULTS OF THIS MODEL

*****************************************************************
*****************************************************************


*****************************************************************
*                                                               *
*     THE FOLLOWING VALUES ARE NOW PREDICTED BY SEDIMOT II.     *
*     THEY CAN BE FOUND IN SUMMARY TABLES.                      *
*      1. PERIOD OF SIGNIFICANT CONCENTRATION                   *
*      2. VOLUME WEIGHTED AVERAGE SETTLEABLE CONCENTRATION      *
*         DURING PERIOD OF SIGNIFICANT CONCENTRATION            *
*      3. VOLUME WEIGHTED AVERAGE SETTLEABLE CONCENTRATION      *
*         DURING PEAK 24 HOUR PERIOD                            *
*      4. ARITHMETIC AVERAGE SETTLEABLE CONCENTRATION           *
*         DURING PERIOD OF SIGNIFICANT CONCENTRATION            *
*      5. ARITHMETIC AVERAGE SETTLEABLE CONCENTRATION           *
*         DURING PEAK 24 HOUR PERIOD                            *
*                                                               *
*     ALL CONCENTRATIONS ARE IN ML/L.                           *
*                                                               *
*****************************************************************
```

***** STORM EVENT SUMMARY *****

TURBULENCE FACTOR	=	1.00	
PERMANENT POOL CAPACITY	=	.626	ACRE-FT
DEAD STORAGE	=	20.00	PERCENT
TIME INCREMENT OUTFLOW	=	.10	HRS
VISCOSITY	=	.009	CM**2/SEC
INFLOW RUNOFF VOLUME	=	.703	ACRE-FT
OUTFLOW ROUTED VOLUME	=	.703	ACRE-FT
STORM VOLUME DISCHARGED (PLUG FLOW)	=	.703	ACRE-FT
POND VOLUME AT PEAK STAGE	=	.753	ACRE-FT
PEAK STAGE	=	6.134	FT
PEAK INFLOW RATE	=	7.802	CFS
PEAK DISCHARGE RATE	=	5.824	CFS
PEAK INFLOW SEDIMENT CONCENTRATION	=	.00	MG/L
PEAK EFFLUENT SEDIMENT CONCENTRATION	=	.00	MG/L
PEAK EFFLUENT SETTLEABLE CONCENTRATION	=	.0000	ML/L
PEAK EFFLUENT SETTLEABLE CONCENTRATION	=	.00	MG/L
STORM AVERAGE EFFLUENT CONCENTRATION	=	.00	MG/L
AVERAGE EFFLUENT SEDIMENT CONCENTRATION	=	.00	MG/L
BASIN TRAP EFFICIENCY	=**********		PERCENT
DETENTION TIME OF FLOW WITH SEDIMENT	=	.34	HRS
DETENTION TIME FROM HYDROGRAPH CENTERS	=	.34	HRS
DETENTION TIME INCLUDING STORED FLOW	=	.34	HRS
SEDIMENT LOAD DISCHARGED	=	.00	TONS
PERIOD OF SIGNIFICANT CONCENTRATION	=	-26.60	HRS
VOLUME WEIGHTED AVERAGE SETTLEABLE CONCENTRATION DURING PERIOD OF SIGNIFICANT CONCENTRATION	=	.00	ML/L
VOLUME WEIGHTED AVERAGE SETTLEABLE CONCENTRATION DURING PEAK 24 HOUR PERIOD	=	.00	ML/L
ARITHMETIC AVERAGE SETTLEABLE CONCENTRATION DURING PERIOD OF SIGNIFICANT CONCENTRATION	=	.00	ML/L
ARITHMETIC AVERAGE SETTLEABLE CONCENTRATION DURING PEAK 24 HOUR PERIOD	=	.00	ML/L

ELEV. 6837.63
(Freeboard = 0.87'
= 10.4")

*** RUN COMPLETED ****

****

WATERSHED IDENTIFICATION CODE

POND15, 25-YEAR, 24-HOUR STORM, INPUT STAGE-DISCHARGE DATA

****

INPUT PARTICLE SIZE-PERCENT FINER DISTRIBUTIONS

SIZE,MM	.250	.100	.050	.010	.005	.001
	.000					
PCT FINER NO. 1	100.000	50.000	35.000	19.000	15.000	6.000
	.000					

**********INPUT VALUES**********

STORM DURATION	=	24.00	HOURS
PRECIPATION DEPTH	=	2.30	INCHES
SPECIFIC GRAVITY	=	2.50	
LOAD RATE EXPONENT FACTOR	=	1.50	
SUBMERGED BULK SPECIFIC GRAVITY	=	1.25	

* *

JUNCTION 1, BRANCH 1, STRUCTURE 1

* *

*** HYDRAULIC INPUT VALUES FOR SUBWATERSHEDS ***

WATER SHED	AREA ACRES	CURVE NUMBER	TC HR	TT HR	ROUTING COEFFICIENTS K-HRS	X	UNIT HYDRO
1	6.23	90.00	.200	.000	.000	.00	1.0

*** SEDIMENT INPUT VALUES FOR SUBWATERSHEDS ***

WATER SHED	SEG NUM	SOIL K	LENGTH FEET	SLOPE PCT	CP VALUE	PART OPT	SURF COND
1	1	.00	.0	.00	.000	1.0	.0

* * * COMPUTED VALUES FOR INDIVIDUAL WATERSHEDS * * *

WATERSHED	PEAK FLOW (CFS)	RUNOFF (INCHES)	SEDIMENT TONS	DIAM (MM)	DELIVERY RATIO 1	DELIVERY RATIO 2
1	7.80	1.35	.00	.089	.949	1.000

NOTE: SEDIMENT DOES NOT INCLUDE POSSIBLE DEPOSITION BY DELIVERY RATIO 2

***** SUMMARY TABLE FOR TOTAL WATERSHED *****

RUNOFF VOLUME	=	.7029	ACRE-FT
PEAK DISCHARGE	=	7.8016	CFS
AREA	=	6.2300	ACRES
TIME OF PEAK DISCHARGE	=	12.00	HRS
BETA	=	1.0000	
RAINFALL EROSITIVITY FACTOR	=	29.51	EI UNIT
PEAK CONCENTRATION	=	.00	MG/L
PEAK SETTLEABLE CONCENTRATION	=	.00	ML/L
PEAK SETTLEABLE CONCENTRATION	=	.00	MG/L
TOTAL SEDIMENT YIELD	=	.0000	TONS
REPRESENTATIVE PARTICLE SIZE	=	.0001	MM
TIME OF PEAK CONCENTRATION	=	.00	HRS
PERIOD OF SIGNIFICANT CONCENTRATION	=	-24.70	HRS
VOLUME WEIGHTED AVERAGE SETTLEABLE CONCENTRATION DURING PERIOD OF SIGNIFICANT CONCENTRATION	=	.00	ML/L
VOLUME WEIGHTED AVERAGE SETTLEABLE CONCENTRATION DURING PEAK 24 HOUR PERIOD	=	.00	ML/L
ARITHMETIC AVERAGE SETTLEABLE CONCENTRATION DURING PERIOD OF SIGNIFICANT CONCENTRATION	=	.00	ML/L
ARITHMETIC AVERAGE SETTLEABLE CONCENTRATION DURING PEAK 24 HOUR PERIOD	=	.00	ML/L

* *

POND RESULTS

* *

***** CONTROL VARIABLES OPTIONS *****

FLOW	FRACTN	ISDO	NRHP	NSP	NCSTR
3	0	1	500	12	1

****
****

CAUTION: THE STAGE OF YOUR PRINCIPAL SPILLWAY
MAY CAUSE BED SCOUR. SEDIMOT II DOES NOT CONSIDER
POSSIBLE BED SCOUR; HENCE, YOUR OBSERVED EFFLUENT
MAY NOT MEET THE DESIRED EFFLUENT STANDARD. INCREASE
THE STAGE OF YOUR PRINCIPAL SPILLWAY.

****
****

***** BASIN GEOMETRY *****

STAGE (FT)	AREA (ACRES)	AVERAGE DEPTH (FT)	DISCHARGE (CFS)	CAPACITY (ACRES-FT)
.00	.000	.00	.00	.00
.10	.001	.05	.00	.00
.20	.082	.05	.00	.00
.50	.086	.35	.01	.03
1.50	.100	1.30	.01	.12
2.50	.114	2.21	.01	.23
3.50	.129	3.09	.01	.35
4.50	.145	3.93	.01	.49
5.40	.162	4.66	.01	.63
5.50	.164	4.74	.46	.64
6.50	.186	5.50	8.92	.82
7.00	.197	5.87	10.76	.91

***** STORM EVENT SUMMARY *****

TURBULENCE FACTOR	=	1.00	
PERMANENT POOL CAPACITY	=	.004	ACRE-FT
DEAD STORAGE	=	20.00	PERCENT
TIME INCREMENT OUTFLOW	=	.10	HRS
VISCOSITY	=	.009	CM**2/SEC
INFLOW RUNOFF VOLUME	=	.703	ACRE-FT
OUTFLOW ROUTED VOLUME	=	.106	ACRE-FT
STORM VOLUME DISCHARGED (PLUG FLOW)	=	.106	ACRE-FT
POND VOLUME AT PEAK STAGE	=	.634	ACRE-FT
PEAK STAGE	=	5.446	FT ELEV. 6836.95
PEAK INFLOW RATE	=	7.802	CFS
PEAK DISCHARGE RATE	=	.218	CFS (Freeboard = 1.55' = 18.7")
PEAK INFLOW SEDIMENT CONCENTRATION	=	.00	MG/L
PEAK EFFLUENT SEDIMENT CONCENTRATION	=	.00	MG/L
PEAK EFFLUENT SETTLEABLE CONCENTRATION	=	.0000	ML/L
PEAK EFFLUENT SETTLEABLE CONCENTRATION	=	.00	MG/L
STORM AVERAGE EFFLUENT CONCENTRATION	=	.00	MG/L
AVERAGE EFFLUENT SEDIMENT CONCENTRATION	=	.00	MG/L
BASIN TRAP EFFICIENCY	=**********		PERCENT
DETENTION TIME OF FLOW WITH SEDIMENT	=	10.42	HRS
DETENTION TIME FROM HYDROGRAPH CENTERS	=	10.42	HRS
DETENTION TIME INCLUDING STORED FLOW	=	10.42	HRS
SEDIMENT LOAD DISCHARGED	=	.00	TONS
PERIOD OF SIGNIFICANT CONCENTRATION	=	-50.10	HRS
VOLUME WEIGHTED AVERAGE SETTLEABLE CONCENTRATION DURING PERIOD OF SIGNIFICANT CONCENTRATION	=	.00	ML/L
VOLUME WEIGHTED AVERAGE SETTLEABLE CONCENTRATION DURING PEAK 24 HOUR PERIOD	=	.00	ML/L
ARITHMETIC AVERAGE SETTLEABLE CONCENTRATION DURING PERIOD OF SIGNIFICANT CONCENTRATION	=	.00	ML/L
ARITHMETIC AVERAGE SETTLEABLE CONCENTRATION DURING PEAK 24 HOUR PERIOD	=	.00	ML/L

*** RUN COMPLETED ****

EARTHFAX ENGINEERING, INC.
ENGINEERS / SCIENTISTS

PROJECT C150 PAGE ___ OF ___
COMPUTED CAB DATE 5/90
CHECKED ___ DATE ___

Pond 015

Inlet channels: There are 2 inlet channels on pond 015. From the topo maps, the disturbed area is sloped toward the pond + enters North Inlet. Assume 10% of flow enters South Inlet, + 90% → North Inlet

North Inlet: $d_{50} \approx 8''$

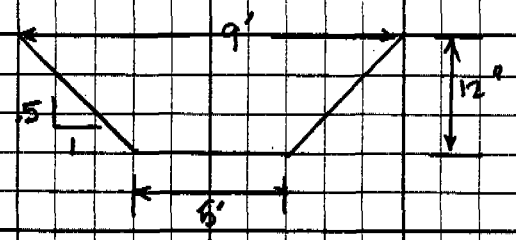

$Q = \frac{7.8(.90)}{2}$

$Q = 7.0$ cfs
(25-yr, 24-hr)

$n = .0395\, D_{50}^{1/6} = .0395\,(8/12)^{1/6} = .037$

HV

Min Slope = .16

Bed Slope =	.16	
Manning's N =	.037	
Bottom Width =	5	feet
Channel Side Slope =	.5	
Flow Depth =	.2285006	feet OK
Cross Sectional Area =	1.246928	square feet
Wetted Perimeter =	6.021886	feet
Hydraulic Radius =	.207066	feet
Discharge =	7	cubic feet/sec
Velocity =	5.613797	feet/sec
Froude Number =	2.069594	

Max Slope = .36

Bed Slope =	.36	
Manning's N =	.037	
Bottom Width =	5	feet
Channel Side Slope =	.5	
Flow Depth =	.1796563	feet
Cross Sectional Area =	.962834	square feet
Wetted Perimeter =	5.803447	feet
Hydraulic Radius =	.1659073	feet
Discharge =	7	cubic feet/sec
Velocity =	7.270205	feet/sec high
Froude Number =	3.022718	

check riprap

EARTHFAX ENGINEERING, INC.
ENGINEERS / SCIENTISTS

PROJECT C150 PAGE ____ OF ____
COMPUTED CAB DATE 5/90
CHECKED ____ DATE ____

pond 015

Check adequacy of riprap on North inlet:

flow depth = 0.18'
velocity = 7.3 ft/sec
Existing d_{50} = 8" = 0.67 ft.

From Figure 1: assume $\frac{R}{d} > 1$
$V_b = V = 7.3$ ft/sec

From figure 2: diameter ≤ 0.5 ft ≤ 6" inches.
(assume slope = 3:1)

∴ Existing riprap is Adequate

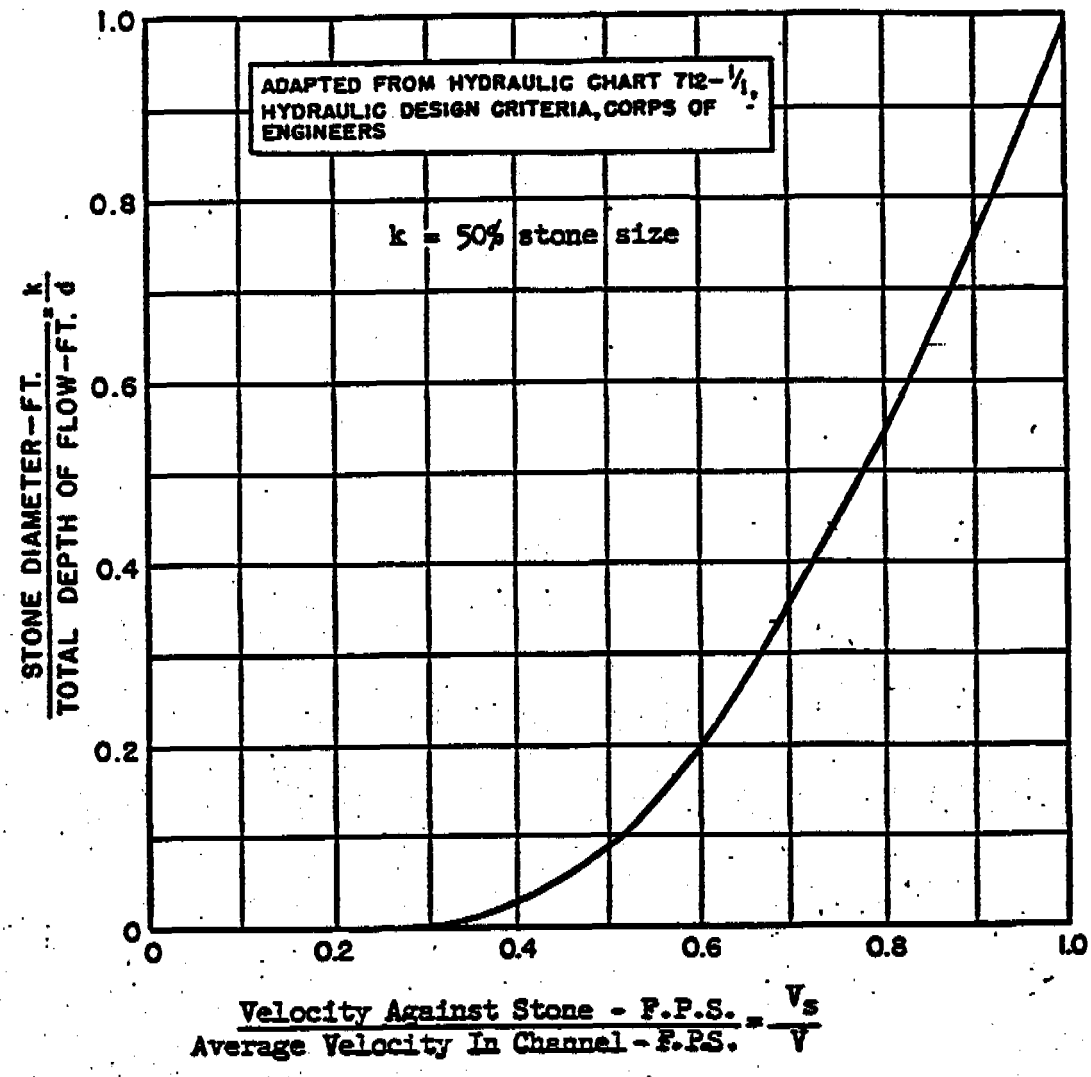

VELOCITY AGAINST STONE ON CHANNEL BOTTOM

FIGURE 1

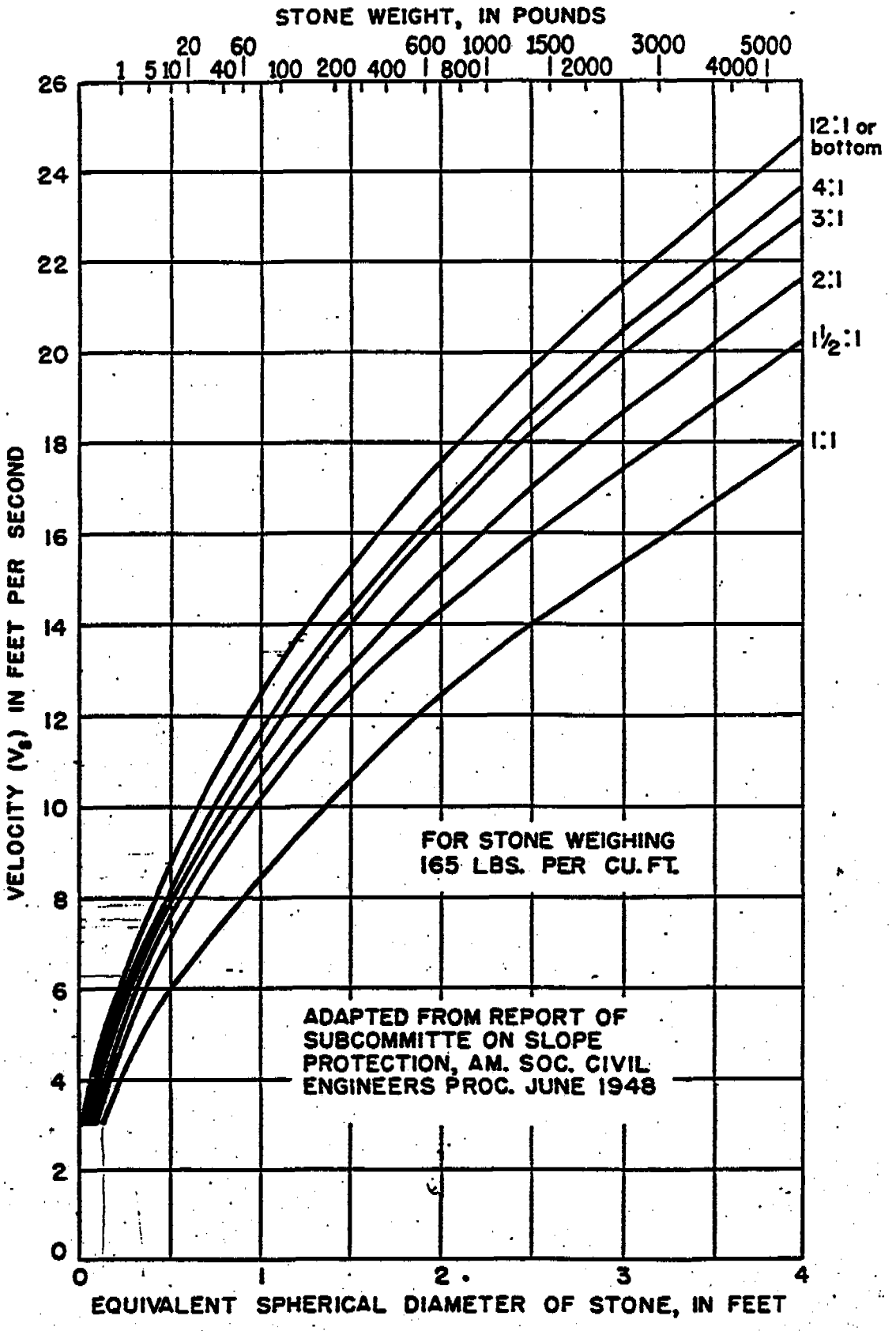

SIZE OF STONE THAT WILL RESIST DISPLACEMENT FOR VARIOUS VELOCITIES AND SIDE SLOPES

FIGURE 2

EARTHFAX ENGINEERING, INC.
ENGINEERS / SCIENTISTS

PROJECT C150 PAGE ____ OF ____
COMPUTED CAB DATE 5/90
CHECKED ____ DATE ____

South Inlet

$d_{50} \approx 3''$

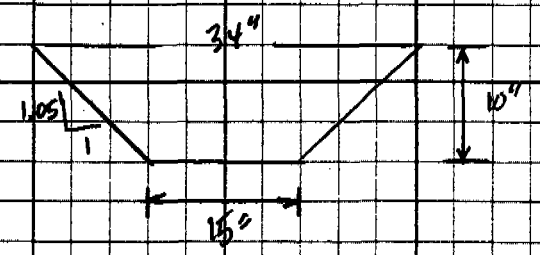

Q = 7.8 (.1)
= 0.8 cfs

$n = .0395 (3/12)^{1/6} = .031$

Min Slope = .10

Bed Slope =	.1	
Manning's N =	.031	
Bottom Width =	1.25	feet
Channel Side Slope =	1.05	
Flow Depth =	.1501922	feet OK
Cross Sectional Area =	.2092237	square feet
Wetted Perimeter =	1.664817	feet
Hydraulic Radius =	.1256738	feet
Discharge =	.8	cubic feet/sec
Velocity =	3.823658	feet/sec
Froude Number =	1.738711	

Max Slope = .36

Bed Slope =	.36	
Manning's N =	.031	
Bottom Width =	1.25	feet
Channel Side Slope =	1.05	
Flow Depth =	.1026411	feet
Cross Sectional Area =	.1383348	square feet
Wetted Perimeter =	1.533485	feet
Hydraulic Radius =	9.020946E-02	feet
Discharge =	.8	cubic feet/sec
Velocity =	5.78307	feet/sec
Froude Number =	3.181046	

check riprap

EARTHFAX ENGINEERING, INC.
ENGINEERS / SCIENTISTS

PROJECT C150 PAGE ____ OF ____
COMPUTED CAB DATE 5/96
CHECKED ____ DATE ____

Pond 015

Check adequacy of riprap on south inlet

flow depth = 0.10'
velocity = 5.8 ft/sec
d_{50} = 3 inches = 3/12 = 0.25'

assume k = 3"

$\frac{k}{d} > 1$ = 1

from Fig 1: $\frac{V_s}{V} = 1.0$ for $\frac{k}{d} > 1$

$\therefore V_s = 1(5.8 \text{ ft/s}) = 5.8$ ft/sec

From Fig 2: diameter = 0.25 ft = 3.0 inches
(assuming 3:1 slope)

$\therefore$ Existing riprap is adequate

EARTHFAX ENGINEERING, INC.
ENGINEERS / SCIENTISTS

PROJECT _____ PAGE _____ OF _____
COMPUTED _____ DATE _____
CHECKED _____ DATE _____

Pond 015

Spillway Outlet velocities.

25-year, 24-hour Storm.

Q_{out} = 0.218 cfs dia = 18"

Slope = 4% Existing d_{50} ~ 1/2"

n = .024

Circular Channel Design Evaluation
Based on Methods in:

OPEN-CHANNEL HYDRAULICS
BY CHOW, 1959

Results for: POND 015 OUTLET

Normal Flow

Channel Characteristics:

Diameter	=	1.5 ft	Design Discharge	=	0.2 cfs
Manning's n	=	0.0240	Channel Slope (%)	=	0.140

Design Characteristics:

OK

Depth	=	0.104 ft	Velocity	=	4.058 fps
Area	=	0.05 ft^2	Top Width	=	0.76 ft
Wetted Perimeter	=	0.800 ft	Froude Number	=	2.694

With velocity < 5.0 ft/second the flow is non-erosive. Riprap is not necessary.

EARTHFAX ENGINEERING, INC.
ENGINEERS / SCIENTISTS

PROJECT C150 PAGE ____ OF ____
COMPUTED CAB DATE 7/91
CHECKED ____ DATE ____

Pond 015

Install An Emergency Spillway ⇒

When pond is full of water when storm (25-year 24-hour) begins:

Peak Q = 5.8 cfs

Install Spillway FL 1' below top of embankment

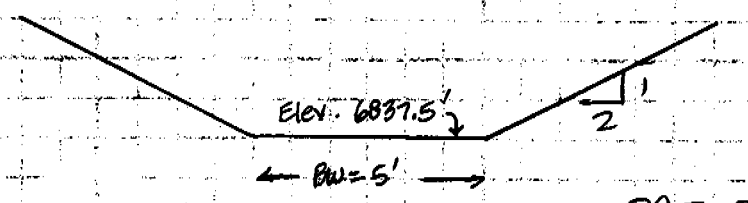

$n = .04$

Max outslope = 0.25 Max vel = 5.8 ft/sec

Min. Slope = .005 Max depth = .59 ft. OK ✓

Size riprap based on max. vel = 5.8 ft/s.

Assume $\frac{K}{D} > 1$ + $V_s = V = 5.8$

$D_{50} = .3$ ft = 4"

Trapezoidal Channel Analysis & Design
Open Channel - Uniform flow

Worksheet Name: POND015

Comment: POND 015 EMERGENCY SPILLWAY

Solve For Depth

Given Input Data:

Bottom Width.....	5.00 ft
Left Side Slope..	2.00:1 (H:V)
Right Side Slope.	2.00:1 (H:V)
Manning's n.....	0.040
Channel Slope....	0.0050 ft/ft
Discharge.....	5.80 cfs

Computed Results:

Depth.....	0.59 ft
Velocity.....	1.60 fps
Flow Area.....	3.62 sf
Flow Top Width...	7.35 ft
Wetted Perimeter.	7.63 ft
Critical Depth...	0.33 ft
Critical Slope...	0.0361 ft/ft
Froude Number....	0.40 (flow is Subcritical)

Open Channel Flow Module, Version 3.2 (c) 1990
Haestad Methods, Inc. * 37 Brookside Rd * Waterbury, Ct 06708

Trapezoidal Channel Analysis & Design
Open Channel - Uniform flow

Worksheet Name: POND015

Comment: POND 015 EMERGENCY SPILLWAY

Solve For Depth

Given Input Data:

Bottom Width.....	5.00 ft
Left Side Slope..	2.00:1 (H:V)
Right Side Slope.	2.00:1 (H:V)
Manning's n.....	0.040
Channel Slope....	0.2500 ft/ft
Discharge.....	5.80 cfs

Computed Results:

Depth.....	0.19 ft
Velocity.....	5.76 fps
Flow Area.....	1.01 sf
Flow Top Width...	5.75 ft
Wetted Perimeter.	5.84 ft
Critical Depth...	0.33 ft
Critical Slope...	0.0361 ft/ft
Froude Number....	2.42 (flow is Supercritical)

EARTHFAX ENGINEERING, INC.
ENGINEERS / SCIENTISTS

PROJECT C150 PAGE ____ OF ____
COMPUTED CAB DATE 4/90
CHECKED ____ DATE ____

Sediment Pond 014 - Crandall Canyon

Stage - Area Data:

Elev	Area (ft^2)	Δ Volume (ft^3)	Cum. Vol (ft^3)
6757.5	0		
		534.5	
6758	2137.9		534.5
		3296.3	
6759	4454.7		3830.8
		5099.5	
6760	5744.3		8930.3
		6214.2	
6761	6684.1		15,144.5
		7159.9	
6762	7635.7		22,304.4
		8,135.6	
6763	8635.4		30,440.0
		9161.4	
6764	9687.4		39,601.4
		10,029.3	
6765	10,371.1		49,630.7
		11,167.8	
6766	11,964.5		60,798.5
		12,517.3	
6767	13,070.1		73,315.8
		13,728.6	
6768	14,387.0		87,044.4
		15,209.2	
6769	16,031.4		102,253.6
		8,200.8	
Approx. top of embankment → 6769.5	16,771.8		110,454.4

Pond topography contoured using CIVILCADD Software (Civilsoft, 1989). Area of the pond calculated using AUTOCAD (AutoDesk, 1989)

Pond 014

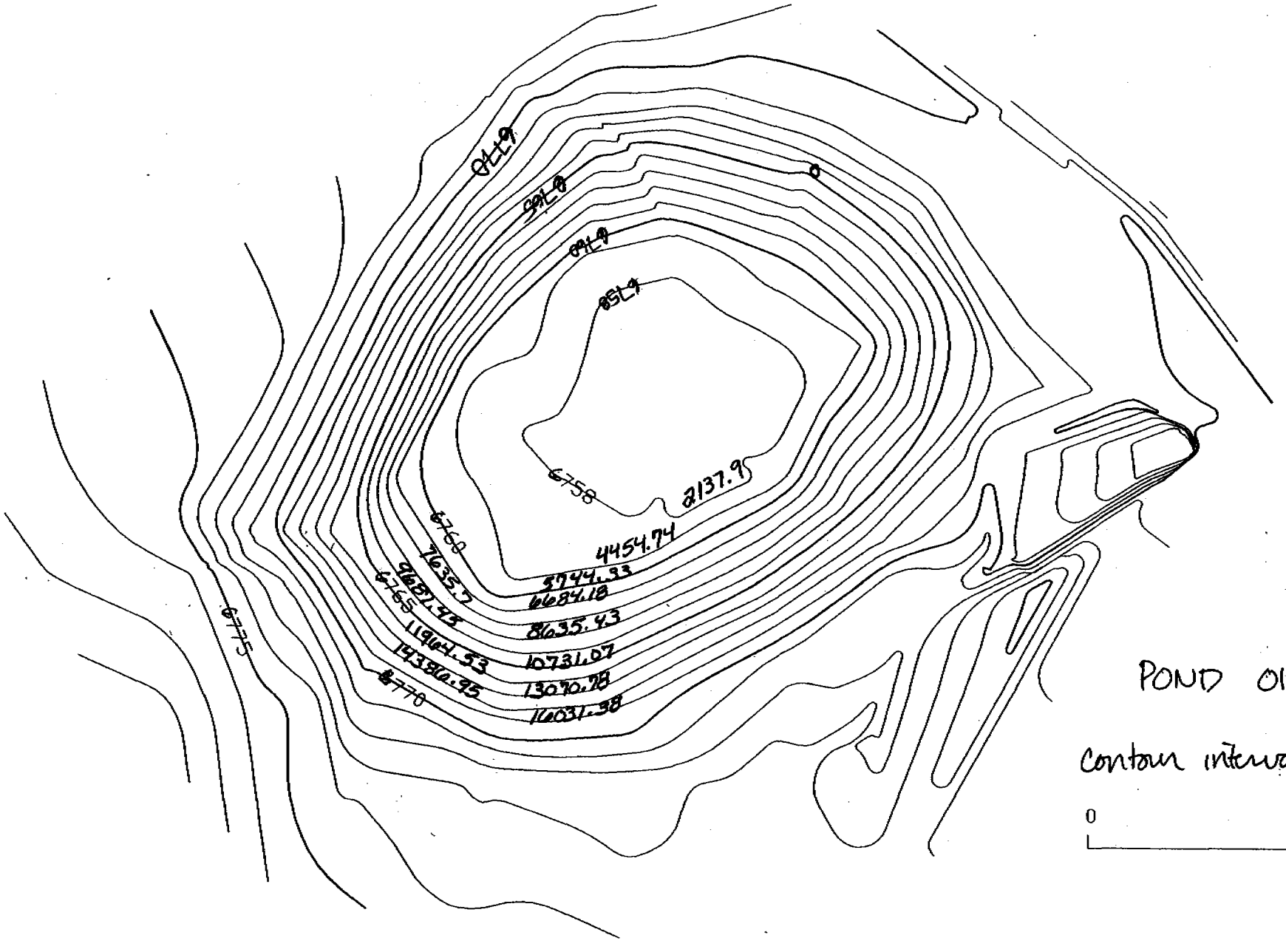

POND 014

contour interval = 1 ft.

0 50

EARTHFAX ENGINEERING, INC.
ENGINEERS / SCIENTISTS

PROJECT C150 PAGE ____ OF ____
COMPUTED CAS DATE 4/90
CHECKED ____ DATE ____

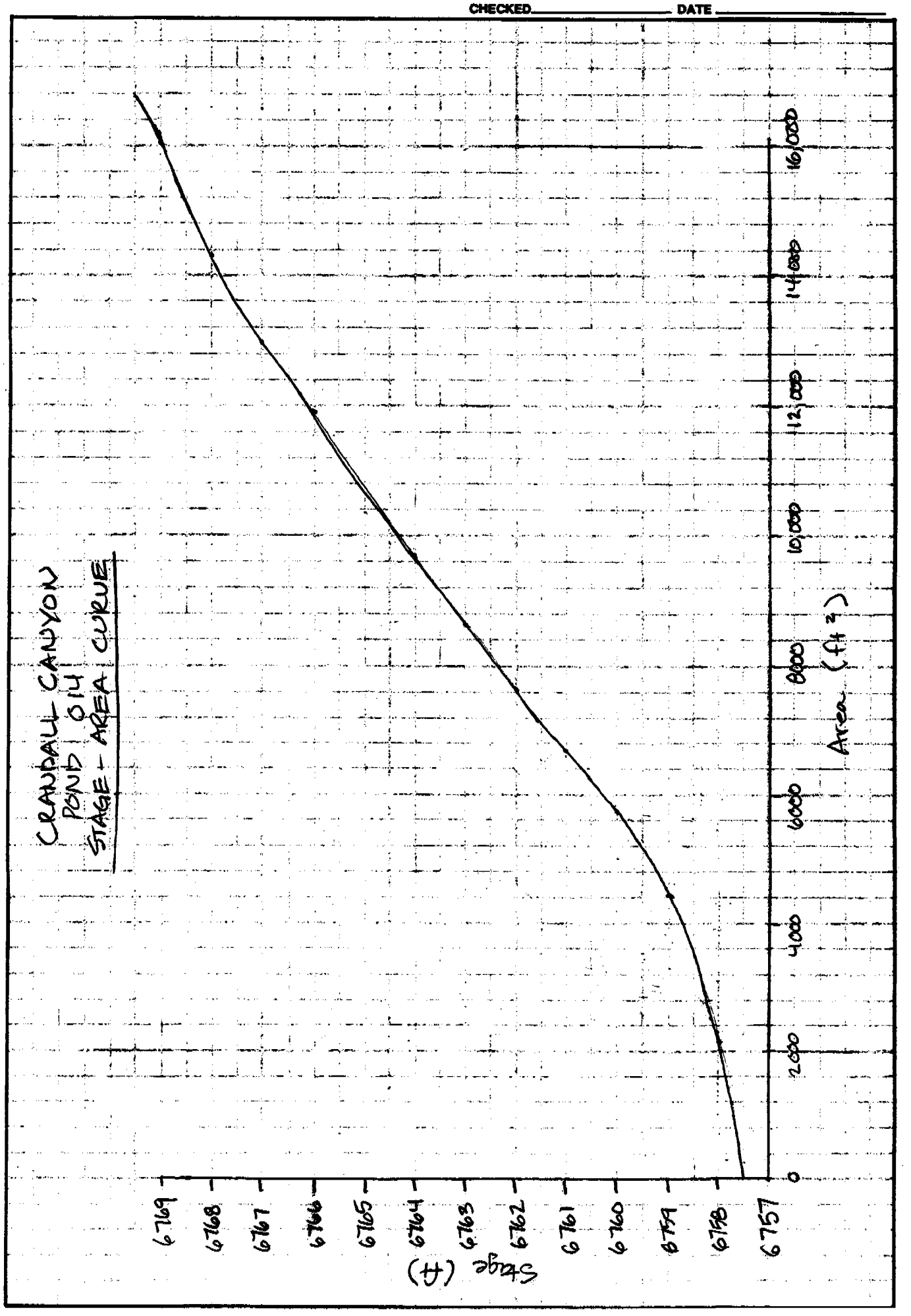

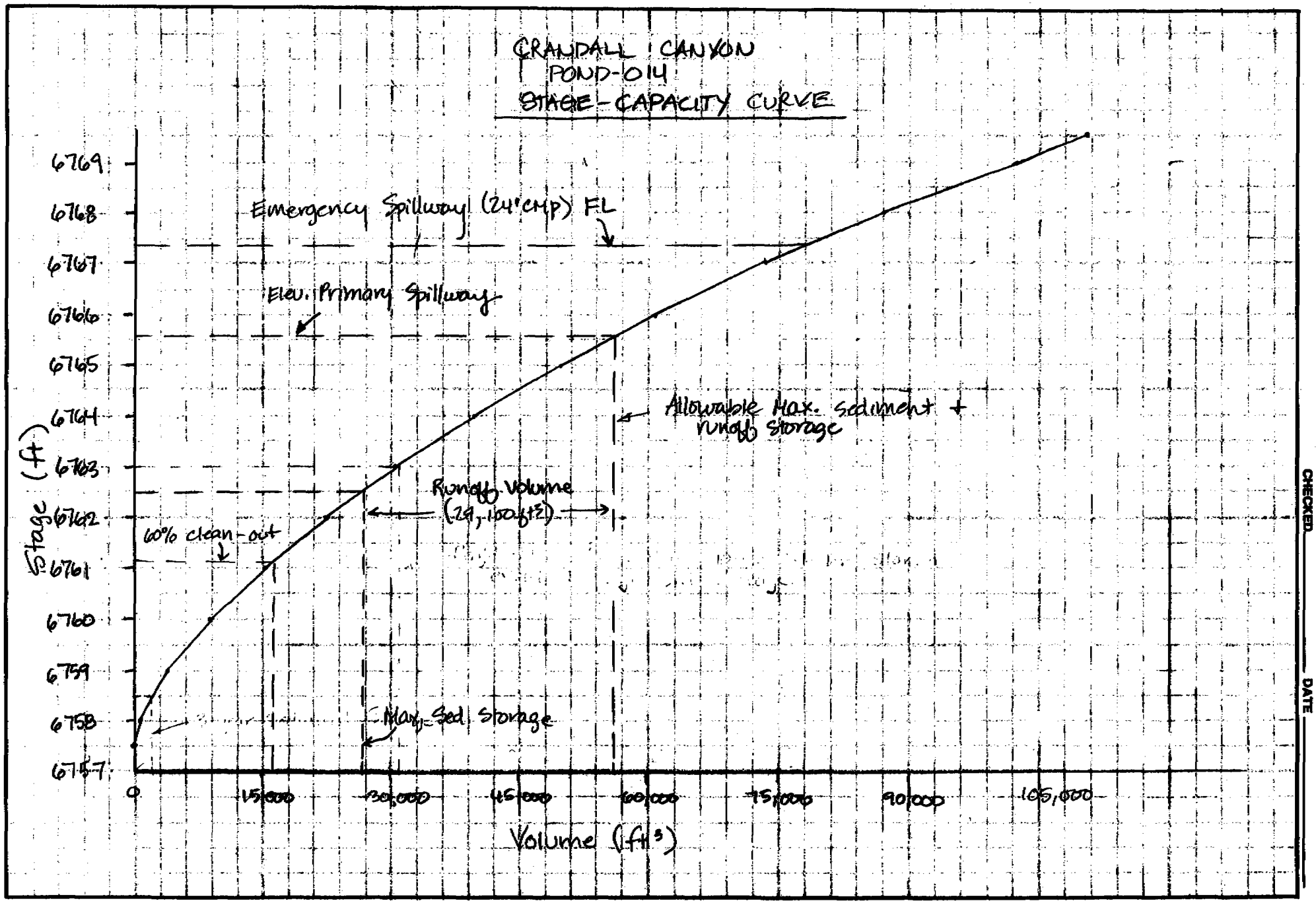

EARTHFAX ENGINEERING, INC.
ENGINEERS / SCIENTISTS

PROJECT C150 PAGE OF
COMPUTED CAB DATE 4/90
CHECKED DATE

286

EARTHFAX ENGINEERING, INC.
ENGINEERS / SCIENTISTS

PROJECT C150 PAGE ____ OF ____
COMPUTED CAB DATE 4/90
CHECKED ____ DATE ____

Soil Erosion to pond 014

$A = R \cdot K \cdot LS \cdot M$ (Israelson, etal, 1984)

$R = 13$ (Israelson, et al (1984))

$K = 0.25$ (Israelson, et al 1984)

$LS = \left(\frac{650 + 450s + 65s^2}{10{,}000 + s^2}\right)\left(\frac{l}{72.6}\right)^m$ (Clyde, et al 1978)

l = Slope length = 1350

s = Slope Steepness = $\frac{6830 - 6770}{1350} \times 100 = 4.4\%$

$m = 0.3$ (Clyde et al 1978) for Slopes < 5%

$LS = \left(\frac{650 + 450(4.4) + 65(4.4)^2}{10{,}000 + (4.4)^2}\right)\left(\frac{1350}{72.6}\right)^{0.3}$

$LS = 0.933$

$VM = 1.20$ for Bare, compacted soil (Israelson et al)

$A = (13)(0.25)(0.933)(1.20) = 3.64$ tons/Acre/year

Disturbed Area = 345,010 ft^2 = 7.92 Acres

A = 28.82 tons/year

Unit wt. of Soil ~ 90 lbs/ft^3

A = 640.4 ft^3/year

3-year Sediment Storage = 1921 ft^3 = .044 Ac-Ft.

EARTHFAX ENGINEERING, INC.
ENGINEERS / SCIENTISTS

PROJECT C150 PAGE ____ OF ____
COMPUTED CAB DATE 4/90
CHECKED ____ DATE ____

POND 014

Calculate runoff volume from 10-year 24-hour storm event. Precip = 1.9 inches

$$Q = \frac{(P - 0.2S)^2}{P + 0.8S} \qquad S = \frac{1000}{CN} - 10$$

(Barfield, 1983)

Curve No, CN = 90 for disturbed Areas.

$$S = \frac{1000}{90} - 10 = 1.11$$

$P = 1.9$ in

$$Q = \frac{(1.9 - 0.2(1.11))^2}{1.9 + 0.8(1.11)} = 1.01 \text{ in} = .084 \text{ ft.}$$

Disturbed Area = 345,010 ft^2

Runoff volume = .084 (345,010) = 29,036 ft^3

Total Req'd pond capacity to contain 10-yr 24-hr storm event:

runoff = 29,036 ft^3
3-yr Sed Storage = 1,921 ft^3
30,957 ft^3

Allowable Storage @ Spillway elevation (6765.6') = 56,000 ft^3

∴ Max sediment storage level can be greater than the estimated 3-year volume.

→

EARTHFAX ENGINEERING, INC.
ENGINEERS / SCIENTISTS

PROJECT _____ PAGE _____ OF _____
COMPUTED _____ DATE _____
CHECKED _____ DATE _____

POND OIL

Allowable Sediment Storage Volume =

56,000 ft³ (Storage @ Spillway)
− 29,100 ft³ (10-yr, 24-hr runoff volume)

26,900 ft³ Allowable Sed. storage.

60% Clearout volume = 16,140 ft³

Max Sed Storage elevation = 6762.5' (3.1 ft below primary spillway)

60% Clean-out level = 6761.1' (4.5 ft below primary spillway)

EARTHFAX ENGINEERING, INC.
ENGINEERS / SCIENTISTS

PROJECT C150 PAGE ____ OF ____
COMPUTED CAB DATE 5/90
CHECKED ____ DATE ____

POND 014

Primary Spillway Data: (Not to Scale)

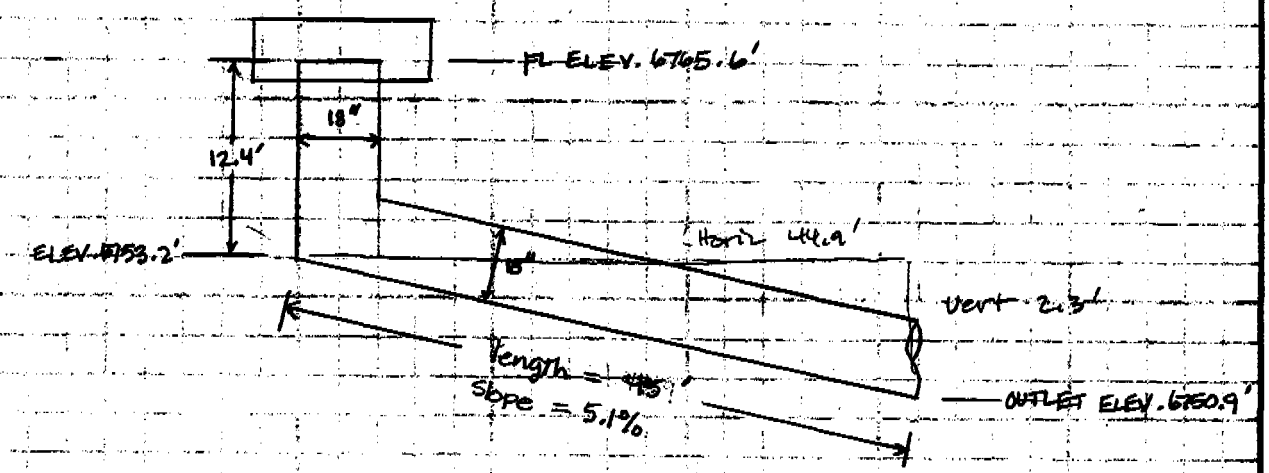

Emergency Spillway:

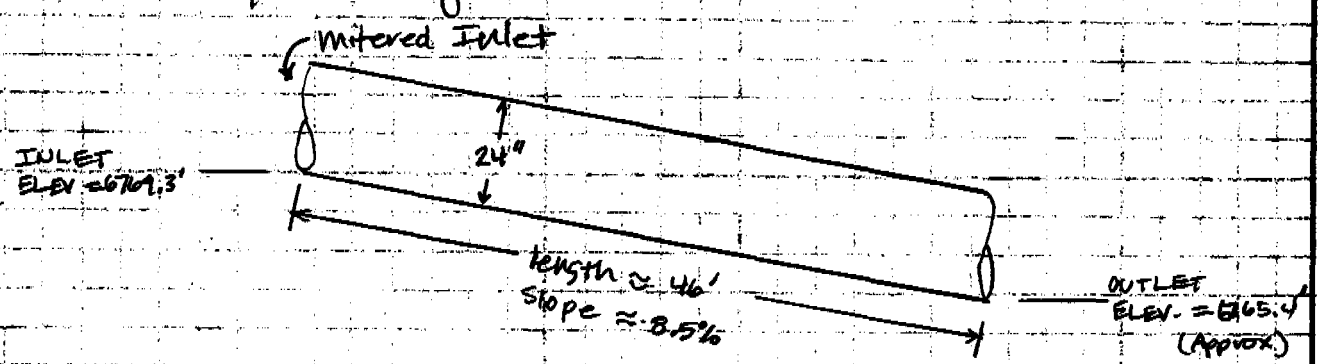

EARTHFAX ENGINEERING, INC.
ENGINEERS / SCIENTISTS

PROJECT _____ PAGE _____ OF _____
COMPUTED _____ DATE _____
CHECKED _____ DATE _____

POND 014

Route 25-year 24-hour Storm through Primary Spillway

Assume Sediment Storage @ Max. elevation 762.5'

	Elev (ft.)	Stage (ft)	Area (ft²)	Area (Ac)
	762.4	0	[illegible]	.001
Max. Sed. Storage →	762.5	0.1	8135.6	.187
	763	0.6	8635.4	.198
	764	1.6	9687.4	.222
	765	2.6	10,871.1	.238
Spillway →	765.6	3.2	11,327.1	.260
	766	3.6	11,964.5	.275
	767	4.6	13,070.1	.300
	768	5.6	14,387.0	.330
	769	6.6	16,031.4	.368
Top of Embankment →	769.5	7.1	16,771.8	.385

EARTHFAX ENGINEERING, INC.
ENGINEERS / SCIENTISTS

PROJECT _____ PAGE _____ OF _____
COMPUTED _____ DATE _____
CHECKED _____ DATE _____

POND 014 Sedimot II INPUT →

- 25-year, 24-hour Storm = 2.3 in.

Watershed data → (Disturbed area CCWS-D2)

- CN = 90 (disturbed)
- Area = 7.92 Acres
- Calculate T_c =

$$\% \text{ Slope} = \frac{6826-6770}{1340} \times 100 = 4.2\%$$

Hyd. length = 1340 ft

$$S = \frac{1000}{CN} - 10 = 1.11$$

$$L = \frac{l^{0.8}(S+1)^{0.7}}{1900\,Y^{0.5}} = \frac{1340^{0.8}(2.11)^{0.7}}{1900\,(4.2)^{1/2}} = .138 \text{ hr}$$

$$T_c = 1.67\,L = 0.23 \text{ hr.}$$

- Use SCS Type II distribution

- NOTE: In order to route hydrograph through the pond spillway, the Sedimentology option of sedimot II must be used. Although some approximations for sediment data are required, the output is not required for the 25-year, 24-hour storm. Thus only the Hydrologic data is valid. Disregard Sedimentology output.

- Use:
  - specific gravity of eroded Sed. = 2.5
  - coef. for distributing Sed. load = 1.5
  - submerged bulk spec. grav = 1.25

EARTHFAX ENGINEERING, INC.
ENGINEERS / SCIENTISTS

PROJECT _____ PAGE _____ OF _____
COMPUTED _____ DATE _____
CHECKED _____ DATE _____

- grain size distribution (required to run hydrology)

Size (mm)	% Finer
.25	100
.10	90
.05	35
.01	19
.005	15
.001	6
.0001	0

7 values

- No. of Structures → 1 (pond)
- Between Structures routing parameters → all Ø
- No. of Subwatersheds = 1
- MUSCLE data → all Ø
- % dead Space → assume 20% (not required for hydrology - only sed. calcs)
- outflow withdrawal → surface
- Inflow vertical concentration → assume mixed
- Enter stage data assuming Sediment Storage at maximum level.

- Barrel dia = 18"
- Riser dia = 18"
- Entrance loss coef = 1.0
- Bend loss coef = .5
- Pipe length = 45'
- Weir flow coef. = 3.1
- Orifice coef. = 0.6
- Manning's n = .024
- Drop between pipe inlet + outlet = 14.7'

EARTHFAX ENGINEERING, INC.
ENGINEERS / SCIENTISTS

PROJECT _____ PAGE _____ OF _____
COMPUTED _____ DATE _____
CHECKED _____ DATE _____

Pond 14 Spillway results

Storm = 25 year, 24-hour

Assume pond is full of water when storm begins:

Inflow runoff volume = 0.894 Ac-ft

Peak inflow rate = 9.64 cfs
Peak discharge rate = 5.74 cfs

Peak stage = 3.92 ft = ELEV 6766.32

∴ Freeboard = 3.18 ft. Pond is OKAY ✓

See attached computer output

Pond 014

- Stage - discharge data computed by SEDIMOT II.
- Assumes pond is full of water to spillway when storm begins.

```
*****************************************************************
                          -- SEDPC --
              SEDIMOT II MODEL FOR THE IBM PC/XT
              CONVERTED BY TECH ENGINEERING INC.
                 VERSION 1.10 NOVEMBER 17,1983
*****************************************************************


*****************************************************************
*****************************************************************

       UNIVERSITY OF KENTUCKY COMPUTER MODEL
       OF SURFACE MINE HYDROLOGY AND SEDIMENTOLOGY
       FOR MORE INFORMATION CONTACT THE AGRICULTURAL
       ENGINEERING DEPARTMENT

       THE UK MODEL IS A DESIGN MODEL DEVELOPED TO PREDICT
       THE HYDRAULIC AND SEDIMENT RESPONSE FROM SURFACE
       MINED LANDS FOR A SPECIFIED RAINFALL EVENT (SINGLE STORM)

       VERSION DATE 9-23-83

       DISCLAIMER: NEITHER THE UNIVERSITY NOR ANY OF ITS EMPLOYEES
       ACCEPT ANY RESPONSIBILITY OR LEGAL LIABILITY FOR THE
       CONCLUSIONS DRAWN FROM THE RESULTS OF THIS MODEL

*****************************************************************
*****************************************************************


*****************************************************************
*                                                               *
*     THE FOLLOWING VALUES ARE NOW PREDICTED BY SEDIMOT II.     *
*     THEY CAN BE FOUND IN SUMMARY TABLES.                      *
*      1. PERIOD OF SIGNIFICANT CONCENTRATION                   *
*      2. VOLUME WEIGHTED AVERAGE SETTLEABLE CONCENTRATION      *
*         DURING PERIOD OF SIGNIFICANT CONCENTRATION            *
*      3. VOLUME WEIGHTED AVERAGE SETTLEABLE CONCENTRATION      *
*         DURING PEAK 24 HOUR PERIOD                            *
*      4. ARITHMETIC AVERAGE SETTLEABLE CONCENTRATION           *
*         DURING PERIOD OF SIGNIFICANT CONCENTRATION            *
*      5. ARITHMETIC AVERAGE SETTLEABLE CONCENTRATION           *
*         DURING PEAK 24 HOUR PERIOD                            *
*                                                               *
*     ALL CONCENTRATIONS ARE IN ML/L.                           *
*                                                               *
*****************************************************************
```

****

WATERSHED IDENTIFICATION CODE

POND 14 - 25-YEAR, 24-HOUR STORM - SEDIMOT CALCULATES STATE-DISCHARGE DATA

****

INPUT PARTICLE SIZE-PERCENT FINER DISTRIBUTIONS

SIZE,MM	.250	.100	.050	.010	.005	.001
	.000					
PCT FINER NO. 1	100.000	50.000	35.000	19.000	15.000	6.000
	.000					

**********INPUT VALUES**********

STORM DURATION	=	24.00	HOURS
PRECIPATION DEPTH	=	2.30	INCHES
SPECIFIC GRAVITY	=	2.50	
LOAD RATE EXPONENT FACTOR	=	1.50	
SUBMERGED BULK SPECIFIC GRAVITY	=	1.25	

* *

JUNCTION 1, BRANCH 1, STRUCTURE 1

* *

*** HYDRAULIC INPUT VALUES FOR SUBWATERSHEDS ***

WATER SHED	AREA ACRES	CURVE NUMBER	TC HR	TT HR	ROUTING COEFFICIENTS K-HRS	X	UNIT HYDRO
1	7.92	90.00	.230	.000	.000	.00	1.0

*** SEDIMENT INPUT VALUES FOR SUBWATERSHEDS ***

WATER SHED	SEG NUM	SOIL K	LENGTH FEET	SLOPE PCT	CP VALUE	PART OPT	SURF COND
1	1	.00	.0	.00	.000	1.0	.0

* * * COMPUTED VALUES FOR INDIVIDUAL WATERSHEDS * * *

WATERSHED	PEAK FLOW (CFS)	RUNOFF (INCHES)	SEDIMENT TONS	DIAM (MM)	DELIVERY RATIO 1	DELIVERY RATIO 2
1	9.64	1.35	.00	.086	.934	1.000

NOTE: SEDIMENT DOES NOT INCLUDE POSSIBLE DEPOSITION BY DELIVERY RATIO 2

***** SUMMARY TABLE FOR TOTAL WATERSHED *****

RUNOFF VOLUME	=	.8935	ACRE-FT
PEAK DISCHARGE	=	9.6411	CFS
AREA	=	7.9200	ACRES
TIME OF PEAK DISCHARGE	=	12.10	HRS
BETA	=	1.0000	
RAINFALL EROSITIVITY FACTOR	=	29.51	EI UNIT
PEAK CONCENTRATION	=	.00	MG/L
PEAK SETTLEABLE CONCENTRATION	=	.00	ML/L
PEAK SETTLEABLE CONCENTRATION	=	.00	MG/L
TOTAL SEDIMENT YIELD	=	.0000	TONS
REPRESENTATIVE PARTICLE SIZE	=	.0001	MM
TIME OF PEAK CONCENTRATION	=	.00	HRS
PERIOD OF SIGNIFICANT CONCENTRATION	=	-24.80	HRS
VOLUME WEIGHTED AVERAGE SETTLEABLE CONCENTRATION DURING PERIOD OF SIGNIFICANT CONCENTRATION	=	.00	ML/L
VOLUME WEIGHTED AVERAGE SETTLEABLE CONCENTRATION DURING PEAK 24 HOUR PERIOD	=	.00	ML/L
ARITHMETIC AVERAGE SETTLEABLE CONCENTRATION DURING PERIOD OF SIGNIFICANT CONCENTRATION	=	.00	ML/L
ARITHMETIC AVERAGE SETTLEABLE CONCENTRATION DURING PEAK 24 HOUR PERIOD	=	.00	ML/L

* *

POND RESULTS

* *

***** CONTROL VARIABLES OPTIONS *****

FLOW	FRACTN	ISDO	NRHP	NSP	NCSTR
3	0	2	500	11	1

***** DROP SPILLWAY INPUTS *****

ENTRANCE LOSS COEFFICIENT	=	1.0000	
BEND LOSS COEFFICIENT	=	.5000	
WEIR COEFFICIENT	=	3.1000	
ORIFICE COEFFICIENT	=	.6000	
MANNING COEFFICIENT	=	.0240	
BARREL DIAMATER	=	18.00	INCHES
RISER DIAMETER	=	18.00	INCHES
LENGTH OF PIPE	=	45.00	FEET
VERTICAL HEAD DROP	=	14.70	FEET

***** BASIN GEOMETRY *****

STAGE (FT)	AREA (ACRES)	AVERAGE DEPTH (FT)	DISCHARGE (CFS)	CAPACITY (ACRES-FT)
.00	.001	.00	.00	.00
.10	.187	.05	.00	.01
.60	.198	.54	.00	.11
1.60	.222	1.50	.00	.32
2.60	.238	2.44	.00	.55
3.20	.260	2.98	.00	.70
3.60	.275	3.33	3.70	.80
4.60	.300	4.18	10.07	1.09
5.60	.330	5.01	13.18	1.40
6.60	.368	5.81	15.69	1.75
7.10	.385	6.20	16.80	1.94

***** STORM EVENT SUMMARY *****

TURBULENCE FACTOR	=	1.00	
PERMANENT POOL CAPACITY	=	.695	ACRE-FT
DEAD STORAGE	=	20.00	PERCENT
TIME INCREMENT OUTFLOW	=	.10	HRS
VISCOSITY	=	.009	CM**2/SEC
INFLOW RUNOFF VOLUME	=	.894	ACRE-FT
OUTFLOW ROUTED VOLUME	=	.894	ACRE-FT
STORM VOLUME DISCHARGED (PLUG FLOW)	=	.893	ACRE-FT
POND VOLUME AT PEAK STAGE	=	.894	ACRE-FT
PEAK STAGE	=	3.921	FT
PEAK INFLOW RATE	=	9.641	CFS
PEAK DISCHARGE RATE	=	5.739	CFS
PEAK INFLOW SEDIMENT CONCENTRATION	=	.00	MG/L
PEAK EFFLUENT SEDIMENT CONCENTRATION	=	.00	MG/L
PEAK EFFLUENT SETTLEABLE CONCENTRATION	=	.0000	ML/L
PEAK EFFLUENT SETTLEABLE CONCENTRATION	=	.00	MG/L
STORM AVERAGE EFFLUENT CONCENTRATION	=	.00	MG/L
AVERAGE EFFLUENT SEDIMENT CONCENTRATION	=	.00	MG/L
BASIN TRAP EFFICIENCY	=**********		PERCENT
DETENTION TIME OF FLOW WITH SEDIMENT	=	.37	HRS
DETENTION TIME FROM HYDROGRAPH CENTERS	=	.37	HRS
DETENTION TIME INCLUDING STORED FLOW	=	.37	HRS
SEDIMENT LOAD DISCHARGED	=	.00	TONS
PERIOD OF SIGNIFICANT CONCENTRATION	=	-26.40	HRS
VOLUME WEIGHTED AVERAGE SETTLEABLE CONCENTRATION DURING PERIOD OF SIGNIFICANT CONCENTRATION	=	.00	ML/L
VOLUME WEIGHTED AVERAGE SETTLEABLE CONCENTRATION DURING PEAK 24 HOUR PERIOD	=	.00	ML/L
ARITHMETIC AVERAGE SETTLEABLE CONCENTRATION DURING PERIOD OF SIGNIFICANT CONCENTRATION	=	.00	ML/L
ARITHMETIC AVERAGE SETTLEABLE CONCENTRATION DURING PEAK 24 HOUR PERIOD	=	.00	ML/L

ELEV = 6766.32

Freeboard = 3.18'

*** RUN COMPLETED ****

EARTHFAX ENGINEERING, INC.
ENGINEERS / SCIENTISTS

PROJECT C150 PAGE ____ OF ____
COMPUTED CAB DATE 5/90
CHECKED ____ DATE ____

Pond 014

Inlet channel

Existing d_{50} ~ 12"

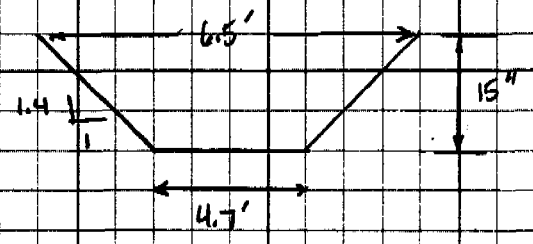

Q = 9.6 cfs
(25-yr 24-hr)

$n = .0395\ D_{50}^{1/6} = .0395$

Min Slope = 3'/11' = .27

Bed Slope =	.27	
Manning's N =	.0395	
Bottom Width =	4.7	feet
Channel Side Slope =	1.4	
Flow Depth =	.260979	feet OK
Cross Sectional Area =	1.275251	square feet
Wetted Perimeter =	5.341436	feet
Hydraulic Radius =	.2387469	feet
Discharge =	9.600001	cubic feet/sec
Velocity =	7.52793	feet/sec
Froude Number =	2.596838	

Max Slope = 2'/5' = .40

Bed Slope =	.4	
Manning's N =	.0395	
Bottom Width =	4.7	feet
Channel Side Slope =	1.4	
Flow Depth =	.231699	feet
Cross Sectional Area =	1.127331	square feet
Wetted Perimeter =	5.269471	feet
Hydraulic Radius =	.2139363	feet
Discharge =	9.600001	cubic feet/sec
Velocity =	8.515689	feet/sec
Froude Number =	3.117668	

capacity OK ✓
check riprap

EARTHFAX ENGINEERING, INC.
ENGINEERS / SCIENTISTS

PROJECT C150 PAGE ____ OF ____
COMPUTED CAB DATE 5/90
CHECKED ____ DATE ____

Riprap Size = Pond 014 Inlet

V = 8.5 ft/s depth = 0.26'

Fig 1: Assume $\frac{K}{d} > 1$

$\frac{V_s}{V} = 1.0$ $V_s = 8.5$ ft/s

Fig 2: Assume Slope 2:1

d_{50} req'd = 0.65' = 7.8 inches

∴ Existing riprap OK

EARTHFAX ENGINEERING, INC.
ENGINEERS / SCIENTISTS

PROJECT _____ PAGE _____ OF _____
COMPUTED _____ DATE _____
CHECKED _____ DATE _____

Pond 014

Spillway Outlet Velocities

25-year, 24-hour Storm.

Q_{out} = 5.7 cfs dia = 18"

Slope = 5.1% Existing d_{50} ~ 6"

n = .024

Circular Channel Design Evaluation
Based on Methods in:

OPEN-CHANNEL HYDRAULICS
BY CHOW, 1959

Results for: POND 014 OUTLET

Normal Flow

Channel Characteristics:

Diameter	=	1.5 ft	Design Discharge	=	5.7 cfs
Manning's n	=	0.0240	Channel Slope (%)	=	0.051

Design Characteristics:

Depth	=	0.692 ft	Velocity	=	7.156 fps
Area	=	0.80 ft^2	Top Width	=	1.50 ft
Wetted Perimeter	=	2.240 ft	Froude Number	=	1.728

Check riprap. assume $K/d = \frac{.5}{.692} = 0.72$

$\frac{V_s}{V} = 0.886$ $V_s = 6.3$ ft/s

reqd $d_{50} < 0.5'$

∴ existing riprap is OK

EARTHFAX ENGINEERING, INC.
ENGINEERS / SCIENTISTS

PROJECT C150 PAGE ____ OF ____
COMPUTED CAB DATE 7/91
CHECKED ____ DATE ____

Pond 014 - Emergency Spillway

Check flow depth + velocity:

Peak Q = 5.74 cfs
Diameter = 2 ft.
Slope = .085 ft/ft
Manning's n = .024

Peak velocity = 8.34 ft/s
Flow Depth = 0.54 ft ✓ OKAY

Since the emergency spillway is tied directly into culvert CCC-13 (36" dia) Riprap at the outlet is not necessary. The riprap at the outlet of CCC-13 has been determined to be more than adequate.

Circular Channel Analysis & Design
Solved with Manning's Equation

Open Channel - Uniform flow

Worksheet Name: POND 014

Comment: POND 014 EMERGENCY SPILLWAY

Solve For Actual Depth

Given Input Data:

Diameter.....	2.00 ft
Slope.....	0.0850 ft/ft
Manning's n.....	0.024
Discharge.....	5.74 cfs

Computed Results:

Depth.....	0.54 ft
Velocity.....	8.34 fps
Flow Area.....	0.69 sf
Critical Depth....	0.85 ft
Critical Slope....	0.0157 ft/ft
Percent Full.....	27.10 %
Full Capacity.....	35.73 cfs
QMAX @.94D.....	38.43 cfs
Froude Number.....	2.36 (flow is Supercritical)

Open Channel Flow Module, Version 3.2 (c) 1990
Haestad Methods, Inc. * 37 Brookside Rd * Waterbury, Ct 06708

APPENDIX 3.7H

AS-BUILT CALCULATIONS FOR PERMANENT STREAM CHANNEL DIVERSION

EARTHFAX ENGINEERING, INC.
ENGINEERS / SCIENTISTS

PROJECT C150 PAGE 1 OF
COMPUTED CAB DATE 5/90
CHECKED DATE

Check Pipe Arch Culverts + Stream Channel
100-year, 24 hour storm event.
Assume Permanent Diversions

Calculate Peak discharge for 100-year, 24-hour storm of 2.9 inches (Miller et al, 1973)

Culvert CCC-7 Watershed Data:

CN = 68
T_c = .844 hr
Area = 2.835 mi^2

Q peak = 437 cfs

Culvert CCC-8

CN = 68
T_c = .852 hr
Area = 3.333 mi^2

Q peak = 511 cfs

Culvert CCC-24

CN = 68
T_c = 1.067 hr
Area = 4.146 mi^2

Q peak = 546 cfs

```
*******************************
* EARTHFAX ENGINEERING, INC.  *
*                             *
* HYDROGRAPH GENERATION MODEL *
*   USING SCS CURVE NUMBER    *
*         METHODOLOGY         *
*******************************
```

IDENTIFICATION: DRAINAGE FOR CULVERT CCC-7

INPUT SUMMARY:

```
************************************************************
     STORM:                    WATERSHED:
        DIST. = SCS TYPE II          AREA =  2.835 SQ. MI.
        DEPTH =  2.90 IN.            CN = 68.0
        DURATION = 24.0 HR.          TIME OF CONC. =  0.84 HR.
************************************************************
```

```
************************************************************
```

OUTPUT SUMMARY:

```
************************************************************
     TOTAL RUNOFF DEPTH =  0.5757 INCHES
     INITIAL ABSTRACTION =  0.9412 INCHES
     PEAK FLOW =   436.86 CFS  ( 0.2388 IN/HR)
     TIME TO PEAK =  12.51 HOURS
     RUNOFF VOLUME CHECK =  0.5769 INCHES
************************************************************
```

```
*******************************
* EARTHFAX ENGINEERING, INC.  *
*                             *
* HYDROGRAPH GENERATION MODEL *
*   USING SCS CURVE NUMBER    *
*         METHODOLOGY         *
*******************************
```

IDENTIFICATION: DRAINAGE FOR CULVERT CCC-8

INPUT SUMMARY:

```
************************************************************
     STORM:                    WATERSHED:
        DIST. = SCS TYPE II          AREA =  3.333 SQ. MI.
        DEPTH =  2.90 IN.            CN = 68.0
        DURATION = 24.0 HR.          TIME OF CONC. =  0.85 HR.
************************************************************
```

```
************************************************************
```

OUTPUT SUMMARY:

```
************************************************************
     TOTAL RUNOFF DEPTH =  0.5757 INCHES
     INITIAL ABSTRACTION =  0.9412 INCHES
     PEAK FLOW =   510.74 CFS  ( 0.2375 IN/HR)
     TIME TO PEAK =  12.51 HOURS
     RUNOFF VOLUME CHECK =  0.5769 INCHES
```

```
*******************************
* EARTHFAX ENGINEERING, INC.  *
*                             *
* HYDROGRAPH GENERATION MODEL *
*   USING SCS CURVE NUMBER    *
*         METHODOLOGY         *
*******************************
```

IDENTIFICATION: DRAINAGE FOR CCC-24

INPUT SUMMARY:

```
*************************************************************
     STORM:                    WATERSHED:
        DIST. = SCS TYPE II          AREA =  4.146 SQ. MI.
        DEPTH =  2.90 IN.            CN = 68.0
        DURATION = 24.0 HR.          TIME OF CONC. =  1.07 HR.
*************************************************************
```

```
*************************************************************
```

OUTPUT SUMMARY:

```
*************************************************************
     TOTAL RUNOFF DEPTH =  0.5757 INCHES
     INITIAL ABSTRACTION =  0.9412 INCHES
     PEAK FLOW =   546.18 CFS  ( 0.2041 IN/HR)
     TIME TO PEAK =  12.68 HOURS
     RUNOFF VOLUME CHECK =  0.5769 INCHES
*************************************************************
```

Crandall Canyon

Determine Adequacy of Stream Diversion as Permanent Structure.

Select 3 channel sections and calculate normal depth + flow velocity using Manning's Equation.
Cross Sections provided by Castlegate Coal.

Section 1 @ Station 0+00, 350 feet upstream of culvert CCC-7.

Use peak Q for culvert CCC-7.

$Q_{100\,year,\ 24\,hour} = 437$ cfs.

X-Section:

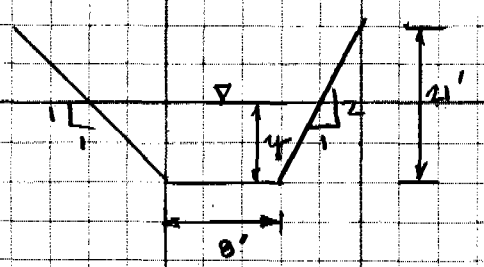

$d_{50} \sim 10''$

$$\text{Slope} = 8'/115' = .070$$

$$n = .0395\, D_{50}^{1/6} = .0395\,(10/12)^{1/6} = .038$$

Use Manning's Equation: $Q = \frac{1.49}{n} A R^{2/3} S^{1/2}$

$$A = 8y + \tfrac{1}{2}(y)(.5y) + \tfrac{1}{2}(y)(y) = 8y + 0.75y^2$$

$$P = 8 + \sqrt{(.5y)^2 + y^2} + \sqrt{(y^2) + (y^2)} = 8 + 2.53y$$

$$R = \frac{A}{P} = \frac{8y + .75y^2}{8 + 2.53y}$$

→

$$437 = \frac{1.49}{.038}(8y + 0.75y^2)\left[\frac{8y + .75y^2}{8 + 2.53y}\right]^{2/3}(.070)^{1/2}$$

$$42.12 = (8y + 0.75y^2)\left[\frac{8y + .75y^2}{8 + 2.53y}\right]^{2/3}$$

y	function
5'	117.96
4'	79.5
3'	48.4
2.5'	35.5
2.75'	41.7 ← y = 2.75'
2.8'	43.0

$$\text{Area} = 8(2.75) + 0.75(2.75)^2 = 27.7\ ft^2$$

$$V = \frac{Q}{A} = \frac{437}{27.7} = \underline{\underline{15.8\ ft/s}}$$

Capacity OK ✓

Check riprap design.

Section 2 @ Sta 10+00, 250 feet upstream of Culvert CCC-8.

Use peak Q for Culvert CCC-8:

$Q_{100yr,24-hr}$ = 511 cfs

X-Section:

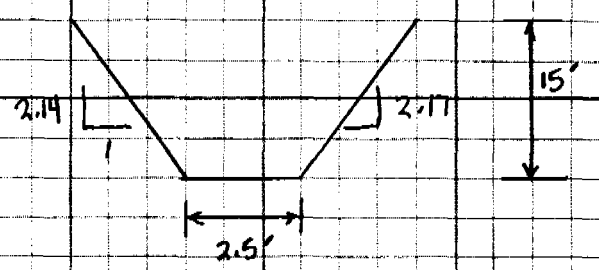

Existing riprap, d_{50} ~ 12-15" on bottom only. Side slopes are Hilfiker retain wall + natural bedrock.

$n = .0395\ D_{50}^{1/6}$ (Barfield et al, 1983)

$n = .0395\ (15/12)^{1/6} = .041$

Channel Slope (from topo) = $\frac{10'}{155'} = .065$

Use TRAP 1:

Bed Slope =	.065	
Manning's N =	.041	
Bottom Width =	2.5	feet
Channel Side Slope =	2.15	
Flow Depth =	6.263108	feet OK
Cross Sectional Area =	33.90266	square feet
Wetted Perimeter =	16.31485	feet
Hydraulic Radius =	2.078024	feet
Discharge =	511	cubic feet/sec
Velocity =	15.07257	feet/sec
Froude Number =	1.061364	

Channel Capacity OK ✓
Check Riprap design.

Section 3 Sta 18+00, 550 feet downstream of Culvert CCC-8, Adjacent to pond 014.

Watershed data: Use Q peak from Culvert CCC-8 and add Q peak from CCWS-U12 to estimate Q at cross section. Calculate Q peak for CCWS-U12:

CCWS-U12 – CN = 70
T_c = .071 hr
A = .007 mi²

precip depth = 2.9" for 100-yr, 24-hr storm

Q = 3.1 cfs

Flow @ X-sec = 511 cfs + 3.1 cfs = 514 cfs

X-Section:

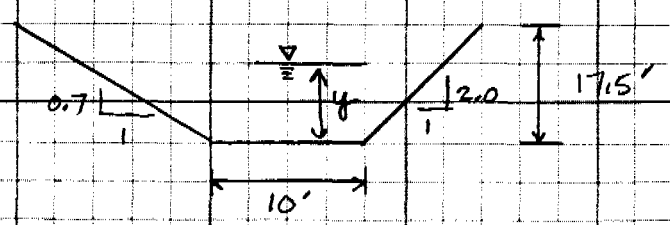

$d_{50} \sim 12''$

Use Manning's Eq: $Q = \frac{1.49}{n} A R^{2/3} S^{1/2}$

$n = .0395 D_{50}^{1/6} = .0395$

$A = 10(y) + \frac{1}{2}(y)(.5y) + \frac{1}{2}(y)(1.4y)$
$A = 10y + 0.95y^2$

$P = 10 + \sqrt{y^2+(1.4y)^2} + \sqrt{y^2+(.5y)^2} = 10 + 2.84y$

$R = \frac{A}{P} = \frac{10y + .95y^2}{10 + 2.84y}$

Slope (from topo) $= \frac{10'}{180'} = 0.056$

$$514 \text{ cfs} = \frac{1.49}{.0395}(10y + .95y^2)\left[\frac{10y + .95y^2}{10 + 2.84y}\right]^{2/3}(.056)^{1/2}$$

$$57.6 = (10y + .95y^2)\left[\frac{10y + .95y^2}{10 + 2.84y}\right]^{2/3}$$

y	function
4'	103.9
3'	62.9
2.8'	55.8
2.82'	56.5
2.85'	57.5 ←

$y = 2.85'$

$A = 10y + .95y^2 = 36.2 \text{ ft}^2$

$V = \frac{Q}{A} = \frac{514}{36.2} = 14.2 \text{ ft/sec}$

Channel Capacity OK ✓

Check Riprap Design

```
*******************************
* EARTHFAX ENGINEERING, INC.  *
*                             *
* HYDROGRAPH GENERATION MODEL *
*   USING SCS CURVE NUMBER    *
*         METHODOLOGY         *
*******************************
```

IDENTIFICATION: CCWS-U12 - 100 YR - 24 HR

INPUT SUMMARY:

```
*************************************************************
     STORM:                    WATERSHED:
        DIST. = SCS TYPE II          AREA =  0.007 SQ. MI.
        DEPTH =  2.90 IN.            CN = 70.0
        DURATION = 24.0 HR.          TIME OF CONC. =  0.07 HR.
*************************************************************
```

```
*************************************************************
```

OUTPUT SUMMARY:

```
*************************************************************
     TOTAL RUNOFF DEPTH =  0.6594 INCHES
     INITIAL ABSTRACTION =  0.8571 INCHES
     PEAK FLOW =      3.11 CFS  ( 0.6875 IN/HR)
     TIME TO PEAK =  12.00 HOURS
     RUNOFF VOLUME CHECK =  0.6608 INCHES
*************************************************************
```

Riprap Sizing

Crandall Canyon Stream channel

Section 1 Existing $D_{50} \sim 10''$

try 1: Assume $k = 10''$ $d = 2.75'$

$\frac{k}{d} = 0.30$

Fig 1: $\frac{V_s}{V} = 0.67$ $V_s = 10.6$ ft/s

Fig 2: Assume bottom slope

d_{50} req'd $\sim 0.75' = 9''$

∴ Existing riprap is OK

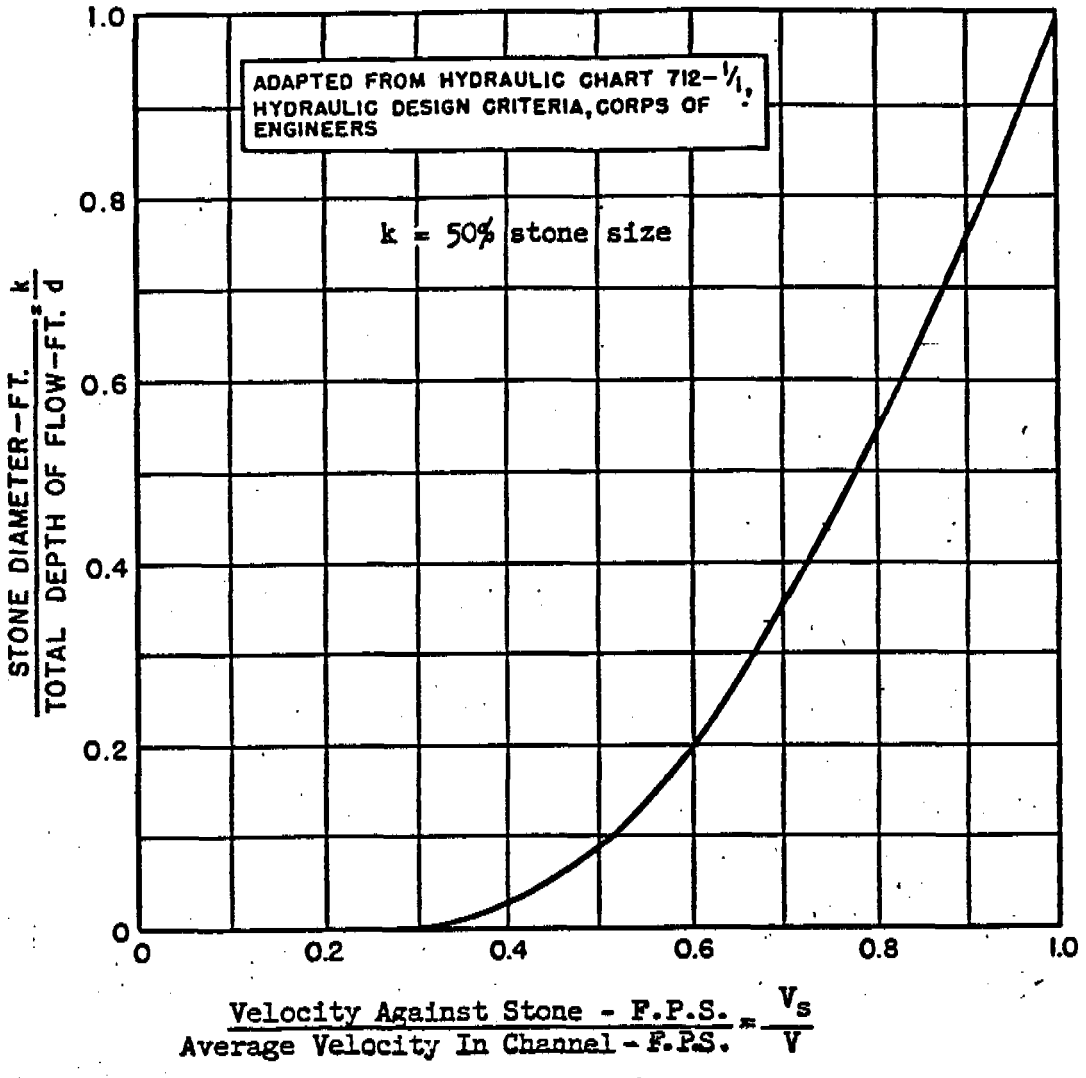

VELOCITY AGAINST STONE ON CHANNEL BOTTOM

FIGURE 1

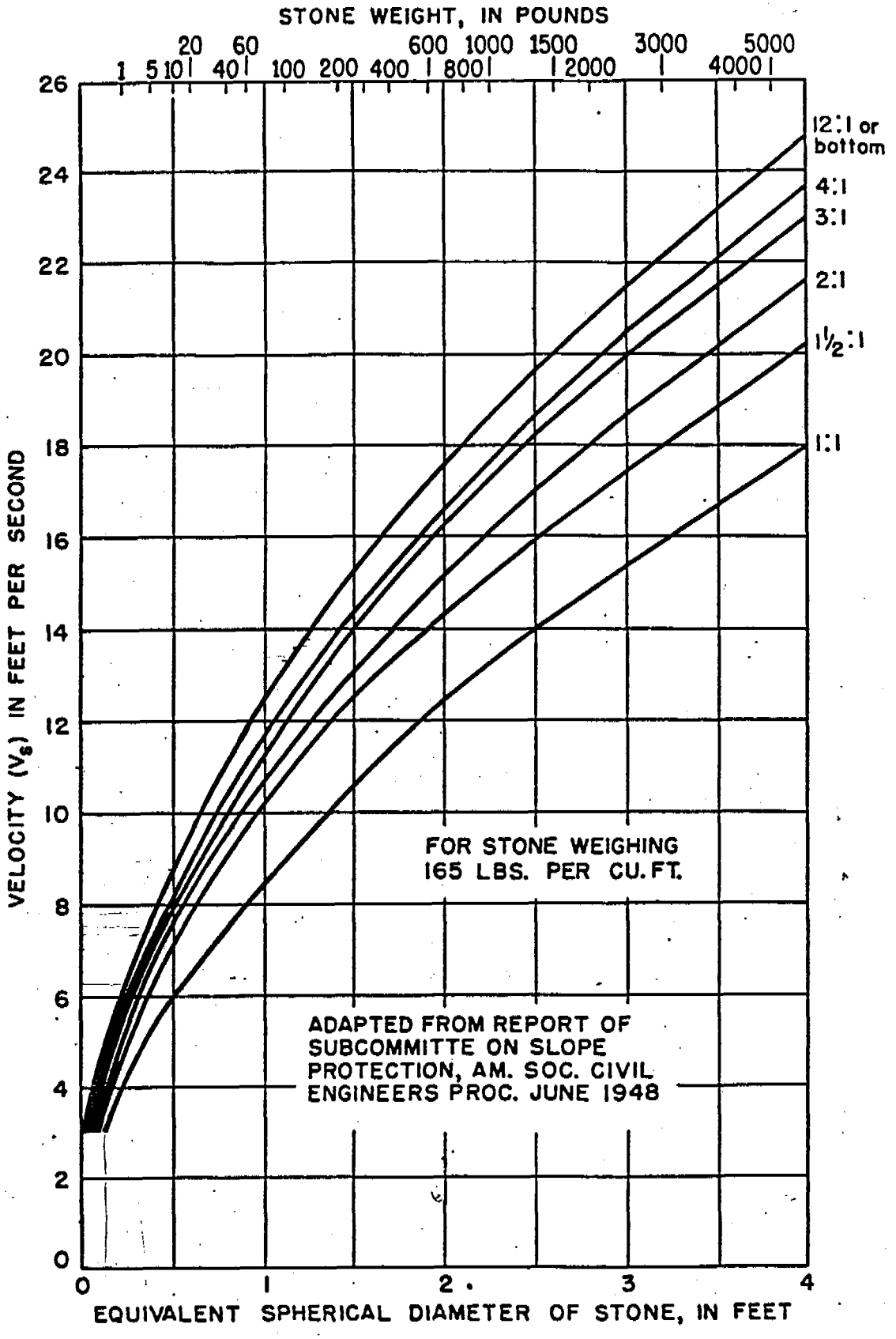

SIZE OF STONE THAT WILL RESIST DISPLACEMENT FOR VARIOUS VELOCITIES AND SIDE SLOPES

FIGURE 2

$\boxed{\text{section 2}}$ $V = 15.1$ ft/s depth $= 6.3$ ft

(1) Assume $K = 12''$

$$\frac{K}{d} = \frac{1}{6.3} = 0.16$$

Fig. 1: $\frac{V_s}{V} = 0.57$ $V_s = 8.6$ ft/s

Fig 2: bottom slope (12:1)

$d_{50} \sim 0.5'$

try 2: Assume $K = .4'$

$$\frac{K}{d} = \frac{.4}{6.3} = .06$$

$\frac{V_s}{V} = .47'$ $V_s = .47(15.1) = 7.1$ ft/s

req'd $d_{50} < 0.4$ ft. ✓✓

Existing riprap = 12" OKAY

Section 3 $V = 14.2$ ft/s depth $= 2.85'$

try 1: Assume $k = 8''$

$\frac{k}{d} = 0.23$

Fig 1: $\frac{V_s}{V} = 0.63$ $V_s = 8.9$ ft/s

Fig 2: (Bottom Slope)

$d_{50} \sim 0.6$ ft $= 7.2''$

try 2 assume $k = 6'' = .5'$

$\frac{k}{d} = \frac{.5}{2.85} = 0.18$

$\frac{V_s}{V} = .58$ $V_s = 8.2$ ft/s

d_{50} req'd $= 0.45' \sim 0.5' = 6''$ ✓✓

Existing $d_{50} \sim 12''$ okay

Determine Exit Velocities of Pipe Arch Culverts during 100-year 24-hour Storm

Ref: American Iron + Steel Institute, 1983

CCC-7 $Q = 437$ cfs, Slope $= 5.2\%$
Size $= 10.5' \times 17.5'$

Based on Full Flow Calcs:

$Area_f = 130\ ft^2$
$Hyd.\ Rad_f = 2.98\ ft$

Calculate $Q_{full} = \frac{1.49}{n} A R^{2/3} S^{1/2}$

$Q_{full} = \frac{1.49}{.024}(130)(2.98)^{2/3}(.052)^{1/2}$

$Q_{full} = 3800$ cfs

$\frac{Q}{Q_{full}} = \frac{437}{3800} = 0.12$

From Figure:

% of rise = 22%

$\frac{Area}{Area_{full}} = .19$ $A = .19(130) = 24.7\ ft^2$

$V = \frac{Q}{A} = \frac{437}{24.7} = \underline{\underline{17.7\ ft/sec}}$

depth $= .22(10.5) = \underline{\underline{2.3\ ft}}$

Full-Flow Data for Structural Plate Pipe-Arches
Corrugations 6 × 2 in.
Corner Plates 9 pl Radius (Rc) = 18 in.

Dimensions, ft-in.		Waterway Area, ft²	Hydraulic Radius, ft
Span	Rise		
6-1	4-7	22	1.29
6-4	4-9	24	1.35
6-9	4-11	26	1.39
7-0	5-1	28	1.45
7-3	5-3	30	1.51
7-8	5-5	33	1.55
7-11	5-7	35	1.61
8-2	5-9	38	1.67
8-7	5-11	40	1.71
8-10	6-1	43	1.77
9-4	6-3	45	1.81
9-6	6-5	48	1.87
9-9	6-7	51	1.93
10-3	6-9	54	1.97
10-8	6-11	57	2.01
10-11	7-1	60	2.07
11-5	7-3	63	2.11
11-7	7-5	66	2.17
11-10	7-7	70	2.23
12-4	7-9	73	2.26
12-6	7-11	77	2.32
12-8	8-1	81	2.38
12-10	8-4	85	2.44
13-5	8-5	88	2.48
13-11	8-7	91	2.52
14-1	8-9	95	2.57
14-3	8-11	100	2.63
14-10	9-1	103	2.67
15-4	9-3	107	2.71
15-6	9-5	111	2.77
15-8	9-7	116	2.83
15-10	9-10	121	2.89
16-5	9-11	125	2.92
16-7	10-1	130	2.98

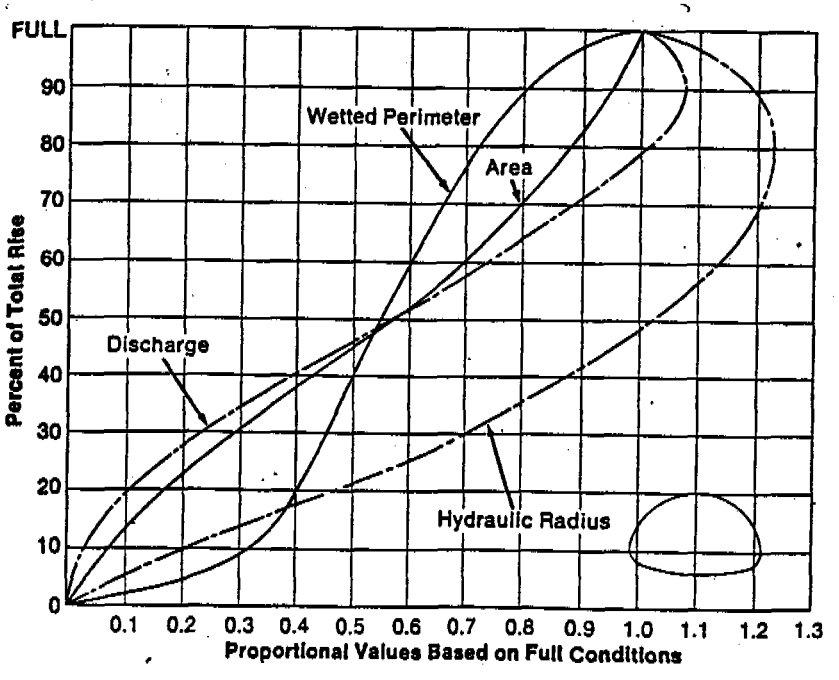

Hydraulic properties of corrugated steel and structural plate pipe-arches.

Ref: American Iron + Steel Institute, 1983.

CCC-8 $Q = 511$ cfs slope $= .9\%$

$A_{full} = 130$ ft^2
$R_{full} = 2.98$ ft

$Q_{full} = \frac{1.49}{.024}(130)(2.98)^{2/3}(.009)^{1/2} = 1586$ cfs

$\frac{Q}{Q_{full}} = \frac{511}{1586} = 0.32$

From Attached Figure:

% of rise $= 0.36$

$\frac{A}{A_{full}} = 0.38$ $A = .38(130) = 49.4$ ft^2

$V = \frac{Q}{A} = \frac{511}{49.4} = \underline{10.3 \text{ ft/s}}$

depth $= .36(10.5) = \underline{3.8 \text{ ft}}$

$\boxed{CCC-24}$ $Q = 546$ cfs Slope = 1.7%

$A_{full} = 130\ ft^2$
$R_{full} = 2.98\ ft$

$$Q_{full} = \frac{1.49}{.024}(130)(2.98)^{2/3}(.017)^{1/2}$$

$Q_{full} = 2179.2$ cfs

$$\frac{Q}{Q_{full}} = \frac{546}{2179.2} = 0.25$$

From Figure:

% of rise = 31%

$$\frac{A}{A_{full}} = 0.32 \qquad A = .32(130) = 41.6\ ft^2$$

$$V = \frac{Q}{A} = \frac{546}{41.6} = \underline{\underline{13.1\ ft/s}}$$

depth = .31 (10.5') = $\underline{\underline{3.3\ ft}}$

Check Existing Riprap @ Pipe Arch Culverts

CCC-7 $V = 17.7$ ft/s depth $= 2.3$ ft

Assume $k = 12''$ $\frac{k}{d} = \frac{1}{2.3} = 0.435$

From Fig 1: $\frac{V_s}{V} = 0.75$

$V_s = .75(17.7) = 13.3$ ft/s

From Fig 2: For channel bottom:

$d_{50} = 1.15'$

try 2: $\frac{k}{d} = \frac{1.25}{2.3} = .54$

$\frac{V_s}{V} = 0.8$ $V_s = 14.2$ ft/s

Fig 2: $d_{50} \sim 1.25'$ ✓

Req'd $d_{50} = 1.25' = 15''$

Existing riprap $d_{50} \sim 12''$

Not Adequate for 100-year storm.

CCC-8 $V = 10.3$ ft/s depth $= 3.8$ ft

Existing $d_{50} = 6''$

Try 1: Assume $K = .75'$

$$\frac{K}{d} = \frac{.75}{3.8} = 0.20$$

Fig 1: $\frac{V_s}{V} = .60$ $V_s = .6(10.3) = 6.2$ ft/s

Fig 2: (bottom slope)

d_{50} equiv $= 0.25'$

Try 2: Assume $K = 0.2'$

$$\frac{K}{d} = \frac{.2}{3.8} = .053$$

$\frac{V_s}{V} = 0.45$ $V_s = 4.6$ ft/s

req'd $d_{50} \sim < .25'$

$d_{50} < 3''$

∴ Existing Riprap is Adequate on channel bottom + side slope (2:1)

CCC-24 $V = 13.1$ ft/s depth $= 3.3'$

existing $d_{50} = 8''$

Try 1: Assume $k = 0.5'$

$$\frac{k}{a} = \frac{.5}{3.3} = 0.15$$

Fig 1: $\frac{V_s}{V} = 0.56$ $V_s = 7.3$ ft/s

Fig 2: (worst case slope - 2:1)

Req'd $d_{50} = 0.5'$ ✓

∴ Existing riprap is OK

APPENDIX 3.7I

EMBANKMENT STABILILTY ANALYSIS FOR POND 015
COMPUTER OUTPUT

REGISTERED PROFESSIONAL ENGINEER
NO. 11350
WILLIAM S. HENDRICKSON
STATE OF UTAH

Earthtax Engineering
7324 S.Union Park Midvale, UTAH 84047

CASTLE GATE COAL – CRANDALL CANYON
POND 015 OUTSLOPE C – C'
100 SURFACES HAVE BEEN GENERATED
10 MOST CRITICAL OF SURFACES GENERATED
MINIMUM FACTOR OF SAFETY = 2.330

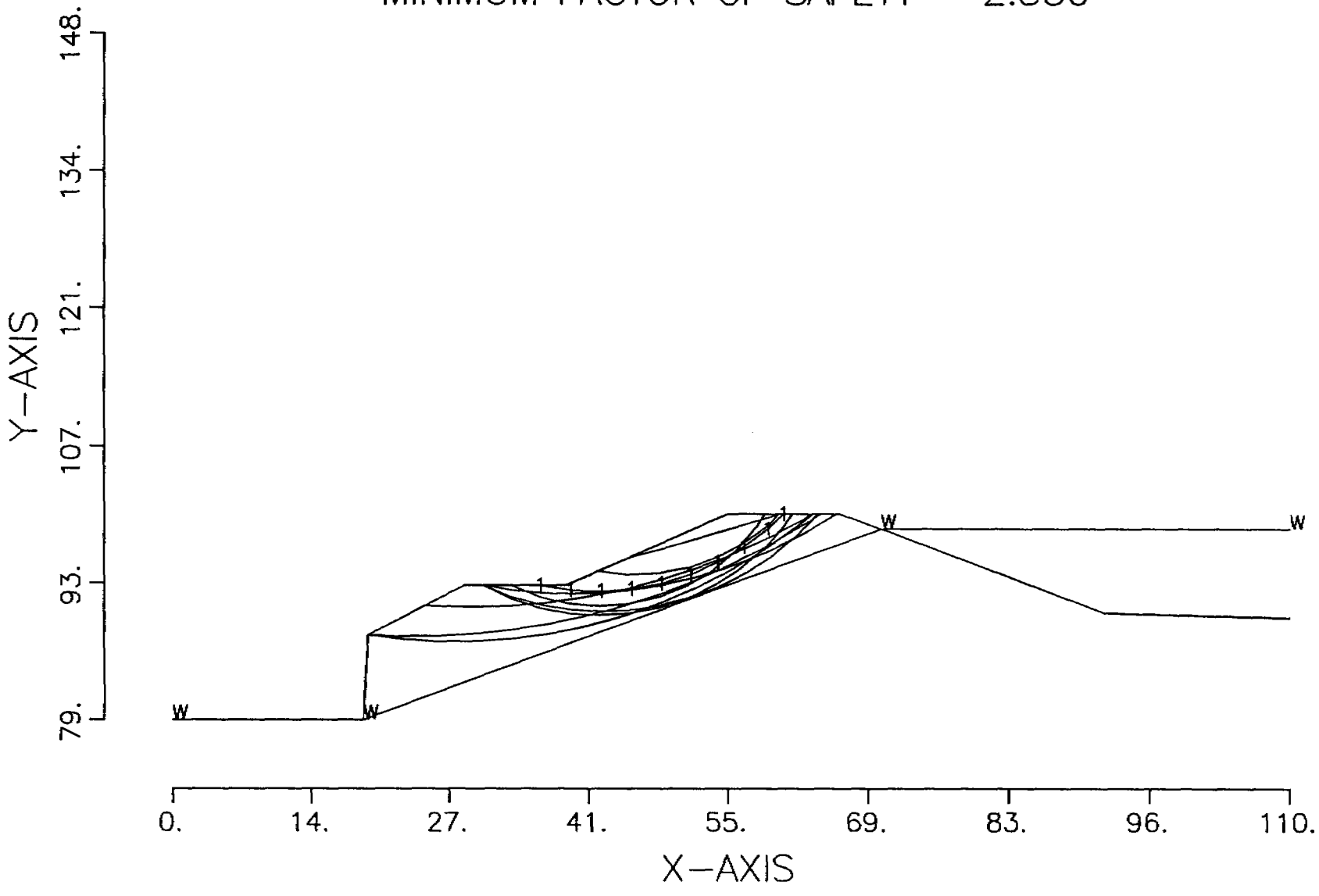

GEOSLOPE
Version 4.20

Supplied by GEOCOMP Corp.
342 Sudbury Rd., Concord, MA. 01742
(617) 369-8304

Portions of this software and documentation are copyrighted 1983,1984,1985 by GEOCOMP Corp. All rights are reserved

GEOSLOPE is based on the program, STABL3, developed at Purdue University under sponsorship of the Federal Highway Administration.

GEOCOMP Corp. has modified the program to run on various microcomputers and plotting devices.

GEOCOMP Corp. makes no warranties as to the fitness of this software. The user bears all responsibility for accuracy and correctness of results produced by this software. See the users manual for further warranty information.

Supplied under exclusive license to :
EarthFax Engineering
7324 S.Union Park Midvale, UTAH 84047

EarthFax Engineering
7324 S.Union Park Midvale, UTAH 84047

--SLOPE STABILITY ANALYSIS--
MODIFIED BISHOP METHOD OF SLICES
CIRCULAR FAILURE SURFACES

PROBLEM DESCRIPTION CASTLE GATE COAL - CRANDALL CANYON
POND 015 OUTSLOPE C - C'

BOUNDARY COORDINATES

9 TOP BOUNDARIES
9 TOTAL BOUNDARIES

BOUNDARY NO.	X-LEFT	Y-LEFT	X-RIGHT	Y-RIGHT	SOIL TYPE BELOW BND
1	.00	79.30	19.00	79.30	1
2	19.00	79.30	19.50	87.80	1
3	19.50	87.80	29.00	92.80	1
4	29.00	92.80	39.00	92.80	1
5	39.00	92.80	55.00	100.00	1
6	55.00	100.00	66.00	100.00	1
7	66.00	100.00	70.00	98.50	1
8	70.00	98.50	92.00	90.00	1
9	92.00	90.00	110.00	89.50	1

ISOTROPIC SOIL PARAMETERS

1 TYPE(S) OF SOIL

SOIL TYPE NO.	TOTAL UNIT WT.	SATURATED UNIT WT.	COHESION INTERCEPT	FRICTION ANGLE (DEG)	PORE PRESSURE PARAMETER	PRESSURE CONSTANT	PIEZOMETRIC SURFACE NO.
1	130.0	145.0	.0	37.0	.00	.0	0

1 PIEZOMETRIC SURFACE(S) HAVE BEEN SPECIFIED

UNIT WEIGHT OF WATER = 62.40

PIEZOMETRIC SURFACE NO. 1 SPECIFIED BY 4 COORDINATE POINTS

POINT NO.	X-WATER	Y-WATER
1	.00	79.30
2	19.00	79.30
3	70.00	98.50
4	110.00	98.50

A CRITICAL FAILURE SURFACE SEARCHING METHOD, USING A RANDOM TECHNIQUE FOR GENERATING CIRCULAR SURFACES, HAS BEEN SPECIFIED.

100 TRIAL SURFACES HAVE BEEN GENERATED.

10 SURFACES INITIATE FROM EACH OF 10 POINTS EQUALLY SPACED

ALONG THE GROUND SURFACE BETWEEN X = 19.50
AND X = 45.00

EACH SURFACE TERMINATES BETWEEN X = 58.00
AND X = 85.00

UNLESS FURTHER LIMITATIONS WERE IMPOSED, THE MINIMUM ELEVATION AT WHICH A SURFACE EXTENDS IS Y = .00

3.00 FT. LINE SEGMENTS DEFINE EACH TRIAL FAILURE SURFACE.

FOLLOWING ARE DISPLAYED THE TEN MOST CRITICAL OF THE TRIAL FAILURE SURFACES EXAMINED. THEY ARE ORDERED - MOST CRITICAL FIRST.

SAFETY FACTORS ARE CALCULATED BY THE MODIFIED BISHOP METHOD.

EarthFax Engineering
7324 S.Union Park Midvale, UTAH 84047

FAILURE SURFACE # 1 SPECIFIED BY 10 COORDINATE POINTS

SAFETY FACTOR = 2.330

X-CENTER = 42.05
Y-CENTER = 118.02
RADIUS = 25.83

POINT NO.	X-SURF	Y-SURF	ALPHA (DEG)
1	36.50	92.80	-9.07
2	39.46	92.33	-2.41
3	42.46	92.20	4.25
4	45.45	92.42	10.91
5	48.40	92.99	17.56
6	51.26	93.90	24.22
7	53.99	95.13	30.88
8	56.57	96.67	37.54
9	58.95	98.49	44.20
10	60.50	100.00	

SLICE NO.	X	DX	DW	DQ	DU	DN	DSr
1	37.75	2.50	64.84	.00	.00	69.24	22.39
2	39.23	.46	32.51	.00	.00	34.72	11.23
3	40.96	3.00	552.87	.00	.00	561.01	181.44
4	43.96	2.99	1057.30	.00	.00	1035.35	334.85
5	46.92	2.95	1401.46	.00	.00	1343.52	434.52
6	49.83	2.86	1572.58	.00	.00	1496.30	483.93
7	52.63	2.74	1572.16	.00	.00	1504.97	486.74
8	54.50	1.01	568.45	.00	.00	555.00	179.50
9	55.78	1.57	775.35	.00	.00	757.01	244.83
10	57.76	2.38	748.15	.00	.00	755.72	244.42
11	59.72	1.55	151.46	.00	.00	160.72	51.98

```
PROFIL
CASTLE GATE COAL - CRANDALL CANYON                POND 015  OUTSLOPE  C - C'
9
0.0 79.3 19.0 79.3 1
19.0 79.3 19.5 87.8 1
19.5 87.8 29.0 92.8 1
29.0 92.8 39.0 92.8 1
39.0 92.8 55.0 100.0 1
55.0 100.0 66.0 100.0 1
66.0 100.0 70.0 98.5 1
70.0 98.5 92.0 90.0 1
92.0 90.0 110.0 89.5 1
SOIL
1
130.0 145.0 0.0 37.0 0.0 0.0 0
WATER
1 0.0
4
0.0 79.3
19.0 79.3
70.0 98.5
110.0 98.5
CIRCL2
10 10
19.5 45.0
58.0 85.0
0.0
0.0
0.0
0.0
```

POND 015 - OUTSLOPE
CRANDALL CANYON

C-C'

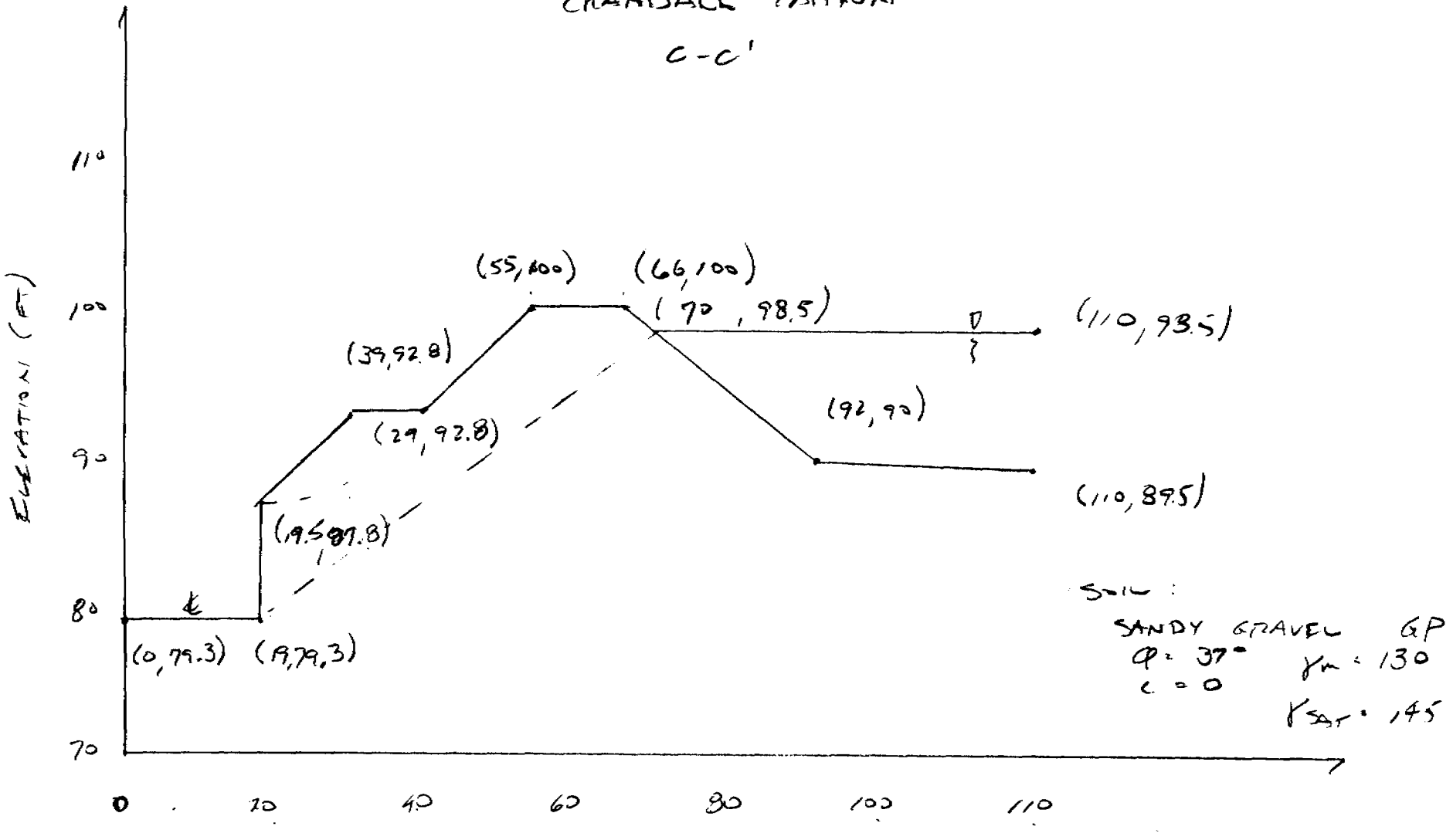

SOIL:
SANDY GRAVEL GP
$\phi = 37°$ $\gamma_m = 130$
$c = 0$ $\gamma_{sat} = 145$

EARTHFAX ENGINEERING, INC.
ENGINEERS / SCIENTISTS

PROJECT HC-150-07 PAGE ___ OF ___
COMPUTED [illegible] DATE 7/2/92
CHECKED ___ DATE ___

Earth[illegible]x Engineering
7324 S.Union Park Midvale, UTAH 84047

CASTLE GATE COAL – CRANDALL CANYON
POND 015 INSLOPE D – D'
100 SURFACES HAVE BEEN GENERATED
10 MOST CRITICAL OF SURFACES GENERATED
MINIMUM FACTOR OF SAFETY = 1.367

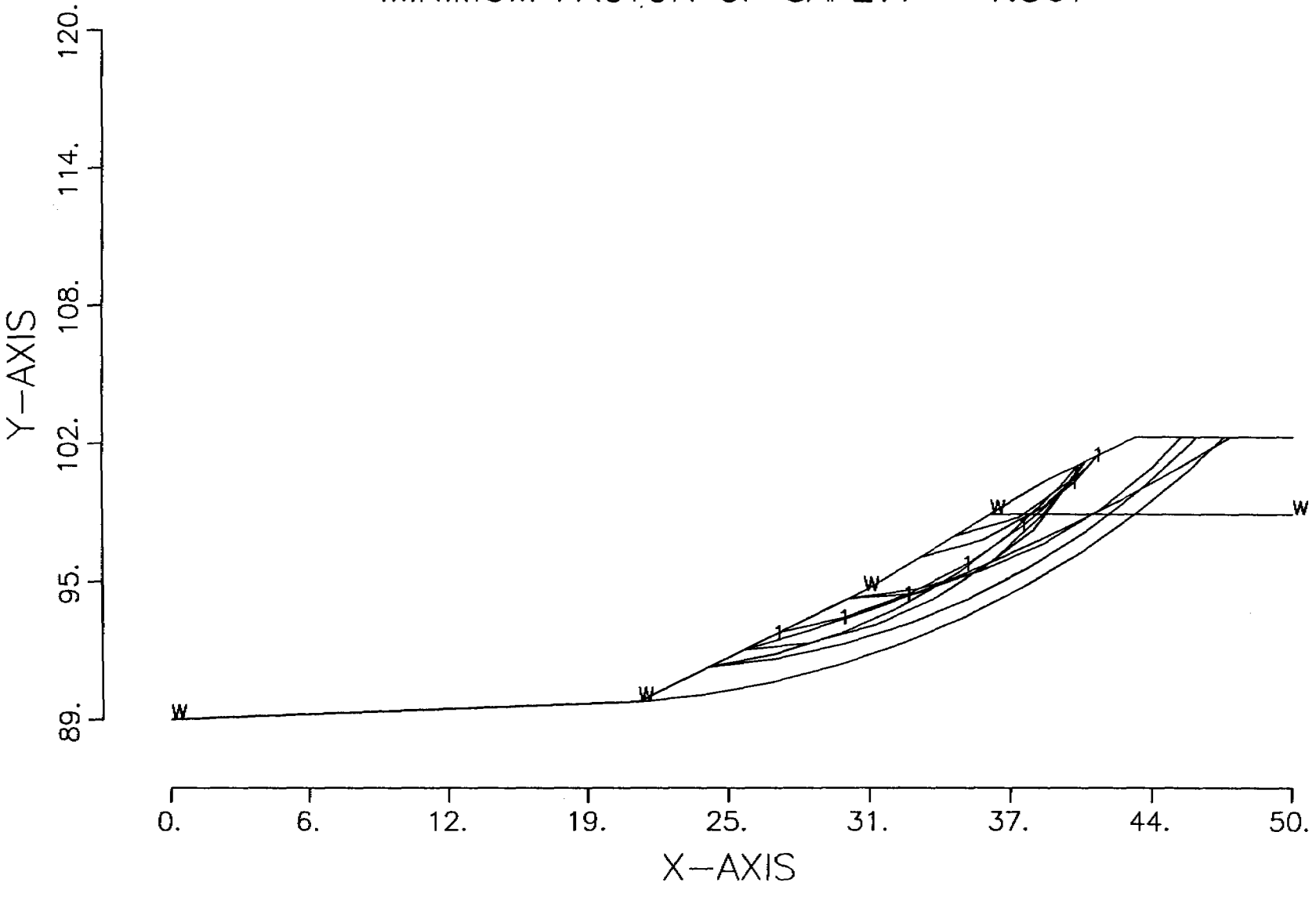

GEOSLOPE
Version 4.20

Supplied by GEOCOMP Corp.
342 Sudbury Rd., Concord, MA. 01742
(617) 369-8304

Portions of this software and documentation are copyrighted 1983,1984,1985 by GEOCOMP Corp.
All rights are reserved

GEOSLOPE is based on the program, STABL3, developed at Purdue University under sponsorship of the Federal Highway Administration.

GEOCOMP Corp. has modified the program to run on various microcomputers and plotting devices.

GEOCOMP Corp. makes no warranties as to the fitness of this software. The user bears all responsibility for accuracy and correctness of results produced by this software. See the users manual for further warranty information.

Supplied under exclusive license to :
EarthFax Engineering
7324 S.Union Park Midvale, UTAH 84047

EarthFax Engineering
7324 S.Union Park Midvale, UTAH 84047

--SLOPE STABILITY ANALYSIS--
MODIFIED BISHOP METHOD OF SLICES
CIRCULAR FAILURE SURFACES

PROBLEM DESCRIPTION CASTLE GATE COAL - CRANDALL CANYON
POND 015 INSLOPE D - D'

BOUNDARY COORDINATES

6 TOP BOUNDARIES
7 TOTAL BOUNDARIES

BOUNDARY NO.	X-LEFT	Y-LEFT	X-RIGHT	Y-RIGHT	SOIL TYPE BELOW BND
1	.00	89.20	21.00	90.00	1
2	21.00	90.00	31.00	95.00	1
3	31.00	95.00	36.60	98.50	1
4	36.60	98.50	39.00	100.00	2
5	39.00	100.00	43.00	102.00	2
6	43.00	102.00	50.00	102.00	2
7	36.60	98.50	50.00	98.50	2

ISOTROPIC SOIL PARAMETERS

2 TYPE(S) OF SOIL

SOIL TYPE NO.	TOTAL UNIT WT.	SATURATED UNIT WT.	COHESION INTERCEPT	FRICTION ANGLE (DEG)	PORE PRESSURE PARAMETER	PRESSURE CONSTANT	PIEZOMETRIC SURFACE NO.
1	145.0	145.0	.0	37.0	.00	.0	0
2	130.0	130.0	.0	37.0	.00	.0	0

1 PIEZOMETRIC SURFACE(S) HAVE BEEN SPECIFIED

UNIT WEIGHT OF WATER = 62.40

PIEZOMETRIC SURFACE NO. 1 SPECIFIED BY 5 COORDINATE POINTS

POINT NO.	X-WATER	Y-WATER
1	.00	89.20
2	21.00	90.00
3	31.00	95.00
4	36.60	98.50
5	50.00	98.50

A CRITICAL FAILURE SURFACE SEARCHING METHOD, USING A RANDOM TECHNIQUE FOR GENERATING CIRCULAR SURFACES, HAS BEEN SPECIFIED.

100 TRIAL SURFACES HAVE BEEN GENERATED.

10 SURFACES INITIATE FROM EACH OF 10 POINTS EQUALLY SPACED
ALONG THE GROUND SURFACE BETWEEN X = 21.00
AND X = 35.00

EACH SURFACE TERMINATES BETWEEN X = 40.00
AND X = 50.00

UNLESS FURTHER LIMITATIONS WERE IMPOSED, THE MINIMUM ELEVATION
AT WHICH A SURFACE EXTENDS IS Y = .00

3.00 FT. LINE SEGMENTS DEFINE EACH TRIAL FAILURE SURFACE.

RESTRICTIONS HAVE BEEN IMPOSED UPON THE ANGLE OF INITIATION.
THE ANGLE HAS BEEN RESTRICTED BETWEEN THE ANGLES OF -45.0 AND 20.0 DEG.

FOLLOWING ARE DISPLAYED THE TEN MOST CRITICAL OF THE TRIAL
FAILURE SURFACES EXAMINED. THEY ARE ORDERED - MOST CRITICAL
FIRST.

SAFETY FACTORS ARE CALCULATED BY THE MODIFIED BISHOP METHOD.

EarthFax Engineering
7324 S.Union Park Midvale, UTAH 84047

FAILURE SURFACE # 1 SPECIFIED BY 7 COORDINATE POINTS

SAFETY FACTOR = 1.367

X-CENTER = 22.96
Y-CENTER = 117.16
RADIUS = 24.43

POINT NO.	X-SURF	Y-SURF	ALPHA (DEG)
1	27.22	93.11	13.58
2	30.14	93.82	20.62
3	32.95	94.87	27.66
4	35.60	96.26	34.70
5	38.07	97.97	41.74
6	40.31	99.97	48.78
7	41.37	101.19	

SLICE NO.	X	DX	DW	DQ	DU	DN	DSr
1	28.68	2.92	159.34	.00	.00	144.66	79.75
2	30.57	.86	100.76	.00	.00	89.16	49.15
3	31.97	1.95	311.15	.00	.00	275.33	151.78
4	34.28	2.66	569.61	.00	.00	498.95	275.05
5	36.10	1.00	228.06	.00	.00	200.76	110.67
6	37.34	1.47	285.85	.00	.00	251.63	138.72
7	38.37	.59	104.99	.00	.00	94.32	51.99
8	38.83	.34	54.78	.00	.00	49.21	27.13
9	39.65	1.31	160.05	.00	.00	143.78	79.26
10	40.84	1.07	47.42	.00	.00	44.17	24.35

```
PROFIL
CASTLE GATE COAL - CRANDALL CANYON                    POND 015 INSLOPE  D - D'
15
0.0 89.2 21.0 90.0 1
21.0 90.0 31.0 95.0 1
31.0 95.0 36.6 98.5 1
36.6 98.5 39.0 100.0 2
39.0 100.0 43.0 102.0 2
43.0 102.0 50.0 102.0 2
36.6 98.5 50.0 98.5 2
SOIL
2
145.0 145.0 0.0 37.0 0.0 0.0 0
130.0 130.0 0.0 37.0 0.0 0.0 0
WATER
1 0.0
5
0.0 89.2
21.0 90.0
31.0 95.0
36.6 98.5
50.0 98.5
CIRCL2
10 10
21.0 35.0
40.0 50.0
10.0
10.0
20.0
-45.0
```

POND 015 - INSLOPE

D - D'

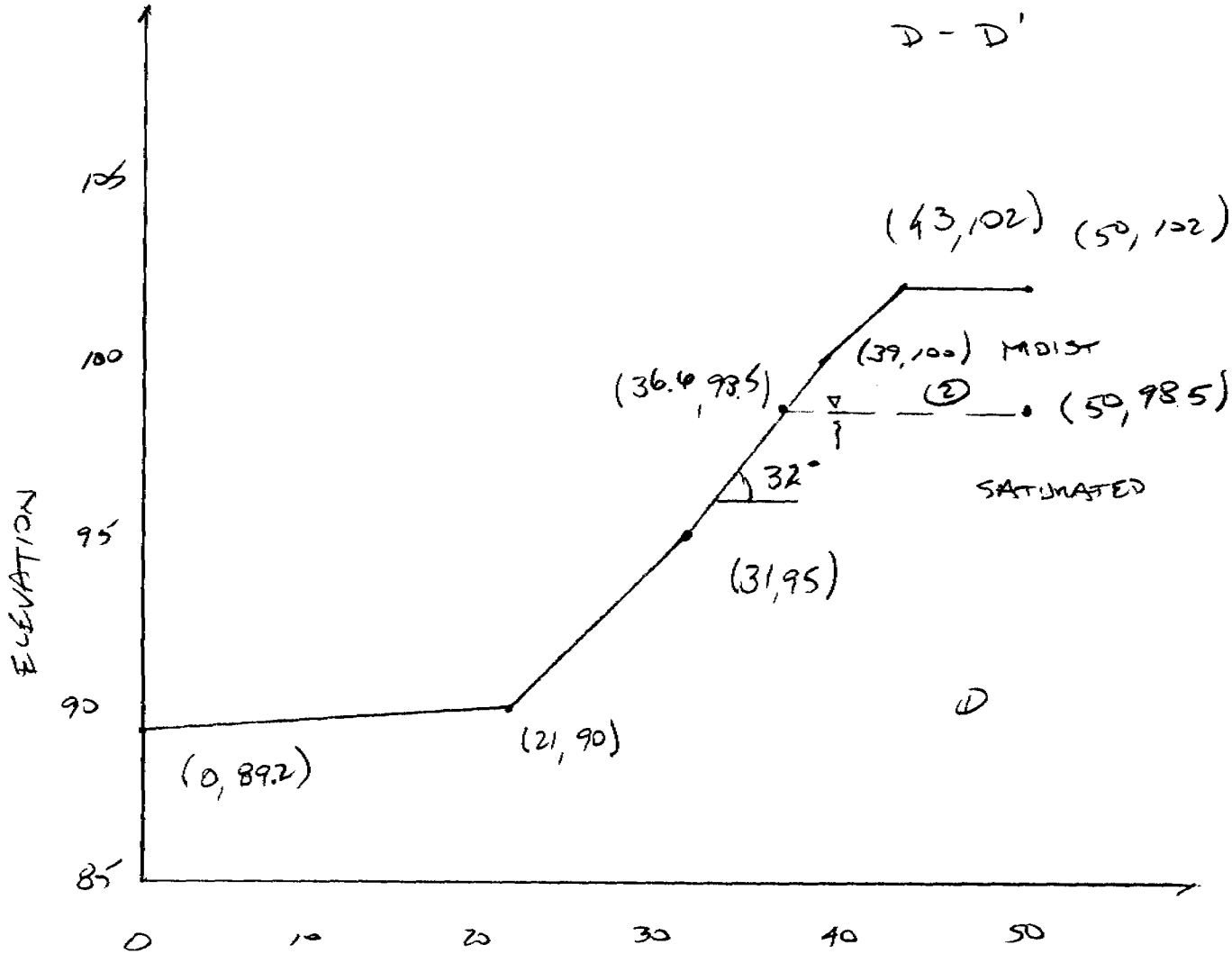

SOIL: GP SILTY GRAVEL

$\phi = 37°$

$c = 0$

$\gamma_m = 130$ PCF

$\gamma_{sat} = 145$ PCF

EARTHFAX ENGINEERING, INC.
ENGINEERS / SCIENTISTS

PROJECT LC-150-07 PAGE ___ OF ___
COMPUTED MWH DATE 7/2/92
CHECKED ___ DATE ___

APPENDIX 3.7J

AS-BUILT SURVEY AND CONSTRUCTION METHOD CERTIFICATIONS

POND INSPECTION REPORT
CASTLE GATE COAL COMPANY
(CONSTRUCTION INSPECTION)

POND: 015 LOCATION: CRANDALL CANYON

ITEM	REMARKS
(1) Potential Safety Hazards	None noted.
(2) Slope Stability	Slopes appear stable.
(3) Erosion	None evident.
(4) Construction and Maintenance Performance Standards	Spillway under construction. Open-notch - fabric under rip-rap.
(5) Recommendations/Comments	Spillway being constructed according to design.

I have performed the above inspection on this pond and do hereby certify it to be a true and accurate representation of the pond at this time.

(Signature)

9/10/91
(Date)

REGISTERED PROFESSIONAL ENGINEER
No. 4548
DAN W. GUY
STATE OF UTAH

POND CONSTRUCTION METHODS

CASTLE GATE COAL COMPANY

SEDIMENT POND 015

The following is a list of pertinent information concerning the above referenced pond and the procedures used in the reconstruction of the pond by E.I.S. Co.:

(1) The only work done on the pond was the addition of an emergency spillway.

(2) The removed material was placed on the lower pad for re-use.

(3) The embankment of the pond was well vegetated. The embankment was not raised.

(4) Equipment used on the pond reconstruction was:

(a) Case 580C Backhoe.
(b) International 80 Loader.
(c) Gas-powered hand compactor.

REGISTERED PROFESSIONAL ENGINEER
No 4548
DAN W. GUY
STATE OF UTAH

SEDIMENT POND CERTIFICATION

Company Name and Address	CASTLE GATE COAL COMPANY P.O. BOX 449 HELPER, UTAH 84526
Permit Number	ACT/007/004
Pond Location	CRANDALL CANYON
Pond Identification	015

Certification Statement:

I hereby certify that I am experienced in the construction of impoundments; I am qualified and authorized in the State of Utah to inspect and certify the construction of impoundments in accordance with the certified and approved design for this structure; the materials and conditions required for construction are in accordance with approved design and meet or exceed the minimum design requirements; and, that inspections of the impoundment were made during critical periods of the construction by or under my direction in accordance with the requirements of regulation R645-301-514.300.

REGISTERED PROFESSIONAL ENGINEER
No. 4548
DAN W. GUY
STATE OF UTAH

(Signature)

10/29/91
(Date)

POND INSPECTION REPORT
CASTLE GATE COAL COMPANY
(FINAL INSPECTION)

POND: 015 LOCATION: CRANDALL CANYON

ITEM	REMARKS
(1) Potential Safety Hazards	None noted.
(2) Slope Stability	Slopes appear stable. Embankment reseeded.
(3) Erosion	None evident.
(4) Construction and Maintenance Performance Standards	Open-notch spillway added to pond.
(5) Recommendations/Comments	Surveyed 9/29/91. Capacity at Principle O.F.- 45,287 cu.ft. Meets or exceeds design.

I have performed the above inspection on this pond and do hereby certify it to be a true and accurate representation of the pond at this time.

(Signature)

9/29/91
(Date)

REGISTERED PROFESSIONAL ENGINEER
No. 4548
DAN W. GUY
STATE OF UTAH

APPENDIX 3.7M

DOCUMENTATION FOR EXISTING SHAFT SEALS IN CRANDALL CANYON

orig mine file
route thru
L Boyton
Dorothy Blackock

AMAX COAL COMPANY

A Subsidiary of AMAX Coal Industries, Inc.

RECEIVED

MAY 15 1991

DIVISION OF
OIL GAS & MINING

AMAX

May 14, 1991

Dr. Dianne R. Nielson, Director
Utah Department of Natural Resources
Division of Oil, Gas & Mining
355 West North Temple
3 Triad Center, Suite 350
Salt Lake City, Utah 84180-1203

Re: Castle Gate Mine Complex, Permit #ACT-007-004
Temporary Sealing of Mine Portals & Shafts

Dear Dr. Nielson:

AMAX Coal Company is requesting approval of an insignificant permit revision to Permit #ACT-007-004 for the Castle Gate Mine Complex in Carbon County, Utah. The purpose of the permit revision is to allow the temporary sealing of the Castle Gate Mine portals and shafts to secure the facilities and prevent unauthorized entry into the underground mine workings.

As you are aware, Castle Gate Mine has been under a temporary cessation of operations since June, 1989, due to extreme mining conditions and poor market conditions. Castle Gate Mine and AMAX Coal personnel have worked diligently over the last two years evaluating alternative mining methods and marketing strategies in the hope of recommencing mining at the Castle Gate Mine in the near future. Due to the continued soft coal market and projections for those conditions to continue into the near future, it is not foreseen that mining operations at Castle Gate Mine will recommence in the near future. However, it is anticipated that market conditions will eventually improve and the reactivation of Castle Gate Mine in the future is expected. Therefore, AMAX Coal Company management has decided to temporarily seal Castle Gate Mine.

The temporary sealing will prevent entry into the underground workings by unauthorized personnel, while allowing the prompt reopening of the mine in the future. AMAX Coal Company will maintain all existing surface facilities in Hardscrabble Canyon, Crandall Canyon and the Castle Gate Plant/Loadout area for future use to preserve the viability of the Castle Gate Mine Complex. AMAX Coal Company will continue all environmental monitoring and reporting required by the approved permit and regulations.

One Riverfront Place • 20 N.W. First Street • Evansville, Indiana 47708-1258 • Tel. 812-421-3900 • FAX 812-421-3909

The details of the proposed temporary sealing plan are contained in the attached documents. The plan basically consists of sealing the drift/portal entries with crushed stone pneumatically stowed in the entries and sealing the Crandall Canyon shafts with a six-inch thick concrete cap. The mine openings proposed to be sealed, along with the type of seal to be used, are shown on the attached drawing. Also enclosed is a copy of a letter from MSHA approving the proposed sealing plan.

The expeditious review and approval of this temporary sealing plan would be greatly appreciated as sealing of the mine is projected to be completed in early June.

Should you or your staff have any questions regarding this matter, please feel free to contact me at (812) 421-3958.

Sincerely,

James W. Buck

James W. Buck, P.E.
Manager, Engineering Services

JWB:kjv

Attachments

xc: P. Ferguson - Castle Gate (w/ enclosure)
S. Garcia - Evansville (w/o enclosure)
D. Ham - Indianapolis (w/o enclosure)

PROPOSED SEALING PLAN
CASTLE GATE COAL COMPANY

It is proposed to seal Mine #3 and associated openings of the Castle Gate Coal Co, Helper, Utah. The sealing will be accomplished in the following manner, consistent with sections 75.1711 (1), (2) CFR:

Drift openings and shallow shafts will be filled with a minimum of 25' of incombustible material (75.1711.2 CFR) per the sketch on Exhibit 1, Type I Seal.

The material used will be crusher run stone or eq. stowed pneumatically into the entries. Pneumatic stowing can place the material into the entries with a 95% rate of compaction. This should provide a non-settling seal and assure minimal air leakage.

The Crandall Canyon Shafts will be capped with 6" of concrete (75.1711.1 CFR) or eq. and have a minimum 2" dia. vent pipe extending at least 15' above the cap. The sketch on exhibit 1 shows the Type II Seal.

The openings and seal type are shown on the attached print(1"=500').

The sealing of this mine is considered temporary in nature as this mine may be reactivated in the future. The shafts were not backfilled for the following reasons:

The shaft backfill is contained in the pad on which the Crandall Facilities are built. This material will not be available until final reclamation of the site.

If the mine is reopened minimal rehabilitation would be needed to reactivate the shafts for access and ventilation.

Mine sealing will be accomplished within 90 days of fan shut-down. Security will be provided until the mine is completely sealed to prevent unauthorized entrance.

Exhibit 1

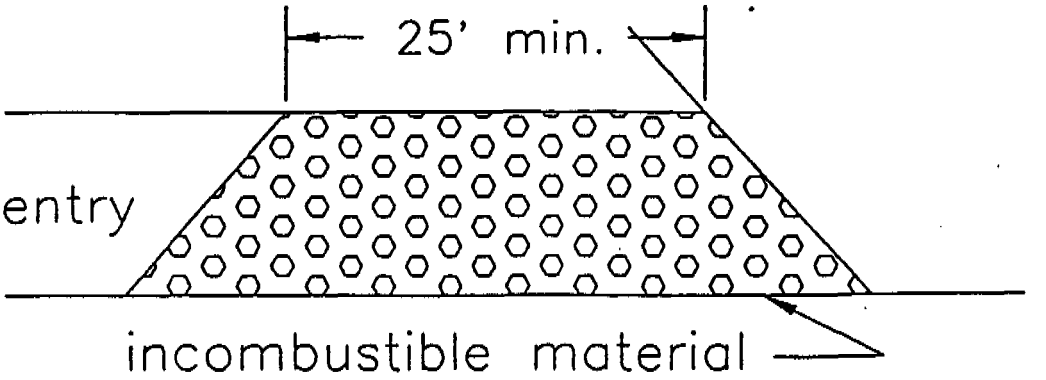

Type I Seal
Drift Adits

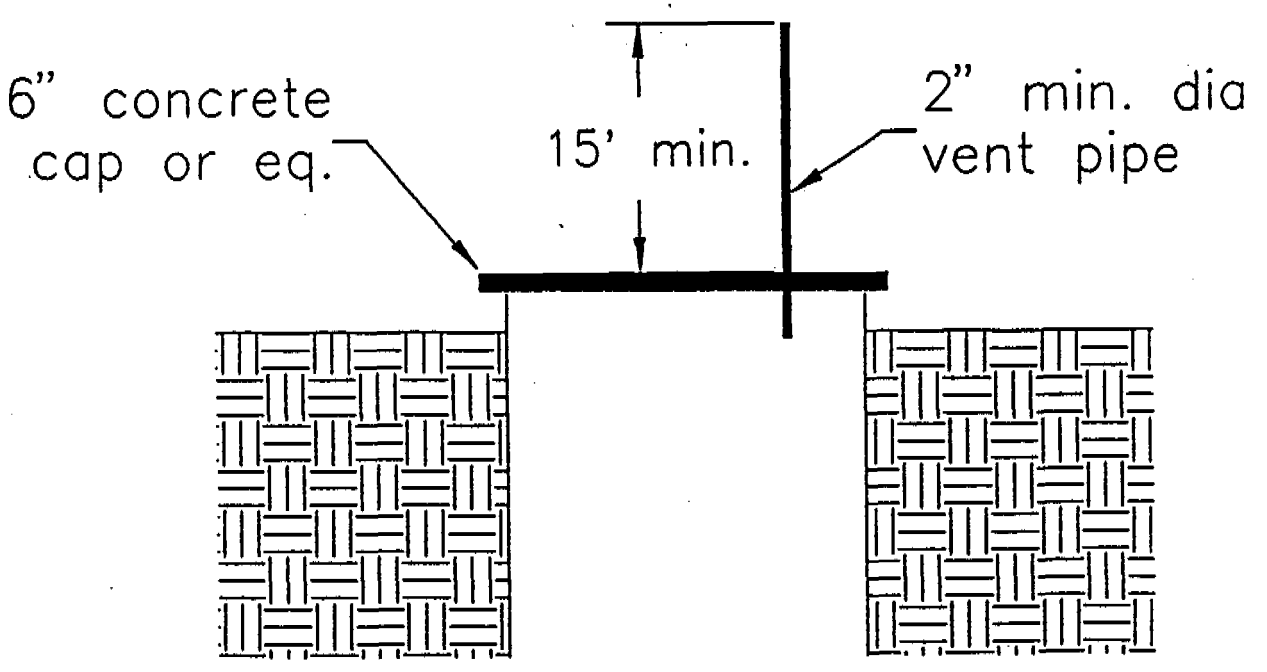

Type II Seal
Crandall Shafts

U. S. Department of Labor

Coal Mine Safety and Health
District 9

MAR 19 1991

Peter A. Ferguson
Castle Gate Coal Company
P. O. Box 449
Helper, UT 84526

RE: Castle Gate Mine
ID No. 42-00165
Mine Sealing Plan

Dear Mr. Ferguson:

The enclosed sealing plan, received on March 11, 1991, consisting of a transmittal letter, a two page plan, and mine map, is approved in accordance with 30 CFR 75.316 with the following safety precautions as discussed between yourself and William Denning:

1. All mine openings shall be protected by a physical barrier to prevent entrance by unauthorized persons until the opening is sealed.

2. Tests for methane shall be conducted at mine openings according to 30 CFR 75.303, 75.304, 75.307, and 75.1106.

3. All applicable regulations in 30 CFR shall be followed during the sealing operation.

4. Following shut-down of the mine fan, all fan housings and structures located at mine openings shall be opened to prevent accumulation of methane.

5. A final mine map, certified by a registered engineer, must be submitted within 60 days after the seals are completed, as required by 30 CFR 75.1204

A copy of this approval should be made available to the miners and reviewed with all miners affected by this plan.

If there are any questions regarding this matter, please contact me at 303-231-5458.

Sincerely,

William A. Holgate

William A. Holgate
District Manager

Enclosure

AMAX COAL INDUSTRIES, INC.

AMAX

DEC 4, 1991 (?)

Bill Holgate, District Manager
MSHA Coal, Room 440
Box 25367
Denver, CO 80225

Dear Sir,

Please find attached one (1) copy of the closure map for the Castlegate Mine #3, Helper, Utah. This map shows the location of the seals and is posted up-to-date with all mine development.

The mine was sealed in accordance with the plan submitted to your office, with the following exceptions:

- Double block seals were erected, in the locations shown on the attached map, before the entries were stowed with crushed stone.
- Seal locations were moved to suit underground conditions, but were verbally approved by the MSHA representative on site before the seals were erected.

The main ventilation fans were shut down on Sept. 23, 1991 and sealing activity was completed Oct. 23, 1991.

If you have any further questions please call 317-266-1756.

Respectfully submitted,

Danny R. Hause, PE
Manager U/G Projects

cc: Jack Matekovic, MSHA - Price w/att
Daron Haddock, UDOGM - Salt Lake City w/13 att
Darlene Murphy, AMAX Coal - Evansville w/att
George Martin, Amax Coal Ind. - 7th wo/att

≡ FINAL SEAL LOCATION

xx BACK FILL

12/4/91

- OLD MAPS NOT CURRENTLY IN PERMIT, BUT THEY ARE IN 3 RING BINDERS

AWN BY	D. House
ISED	B M
ROVED	
A KEY	

CASTLE GATE COAL COMPANY

MINE NO. 3
PROPOSED SEALING PLAN

- FINAL MAP -

Nov. 22, 1991

TOUR RVAL	GRID INT.	COMPUTER SERIAL NO.	MAP FILE NAME:
AWING NO.		SCALE: 0' 400' 800'	FILE NO.

ST OFFICE BOX 449, HELPER, UTAH 84526

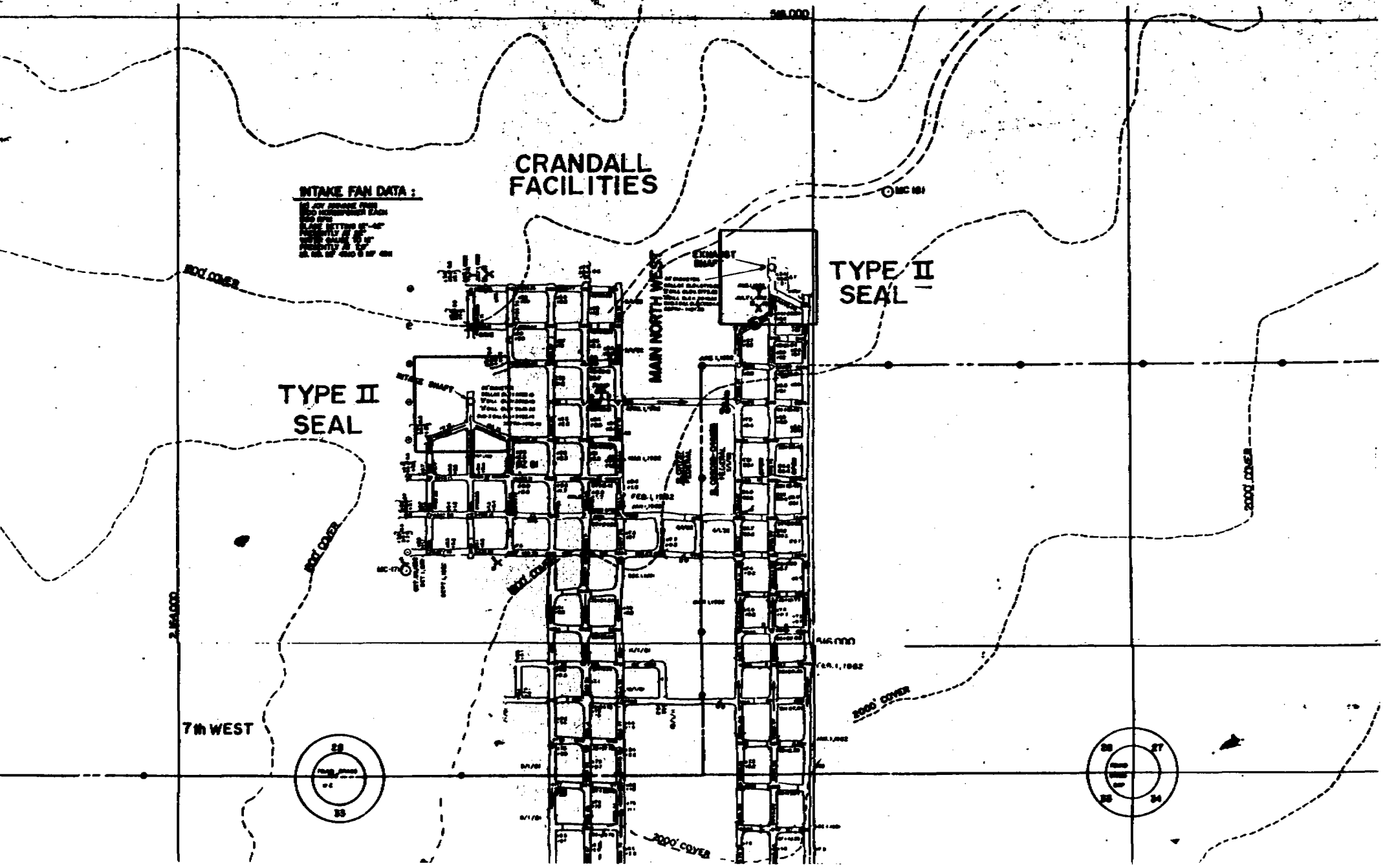
CRANDALL FACILITIES
INTAKE FAN DATA :
TYPE II SEAL
TYPE II SEAL
MAIN NORTH WEST
EXHAUST SHAFT
INTAKE SHAFT
7th WEST
2000' COVER
2000' COVER
2000' COVER
2000' COVER
2000' COVER
2000' COVER
2,164,000
565,000
565,000

January 28, 1991

PROPOSED SEALING PLAN
CASTLE GATE COAL COMPANY

It is proposed to seal Mine #3 and associated openings of the Castle Gate Coal Co, Helper, Utah. The sealing will be accomplished in the following manner, consistent with sections 75.1711 (1), (2) CFR:

Drift openings and shallow shafts will be filled with a minimum of 25' of incombustible material (75.1711.2 CFR) per the sketch on Exhibit 1, Type I Seal.

The material used will be crusher run stone or eq. stowed pneumatically into the entries. Pneumatic stowing can place the material into the entries with a 95% rate of compaction. This should provide a non-settling seal and assure minimal air leakage.

The Crandall Canyon Shafts will be capped with 6" of concrete (75.1711.1 CFR) or eq. and have a minimum 2" dia. vent pipe extending at least 15' above the cap. The sketch on exhibit 1 shows the Type II Seal.

The openings and seal type are shown on the attached print(1"=500').

The sealing of this mine is considered temporary in nature as this mine may be reactivated in the future. The shafts were not backfilled for the following reasons:

The shaft backfill is contained in the pad on which the Crandall Facilities are built. This material will not be available until final reclamation of the site.

If the mine is reopened minimal rehabilitation would be needed to reactivate the shafts for access and ventilation.

Mine sealing will be accomplished within 90 days of fan shut-down. Security will be provided until the mine is completely sealed to prevent unauthorized entrance.

APPROVED CMS & H MAR 19 '91

Exhibit 1

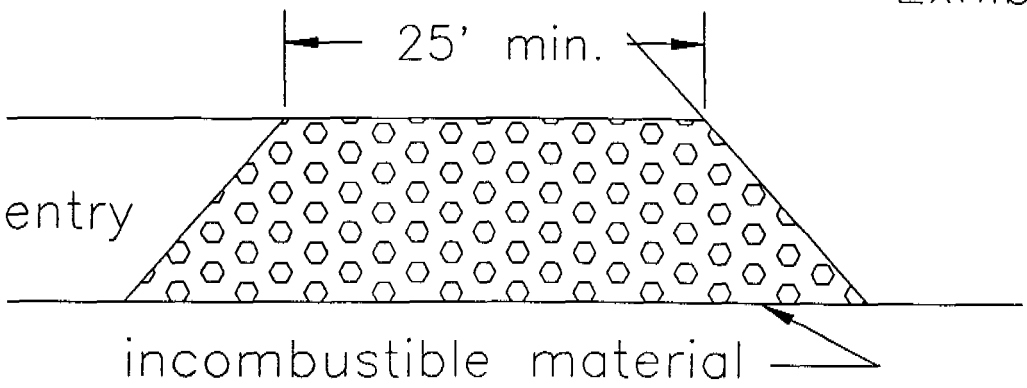

Type I Seal
Drift Adits

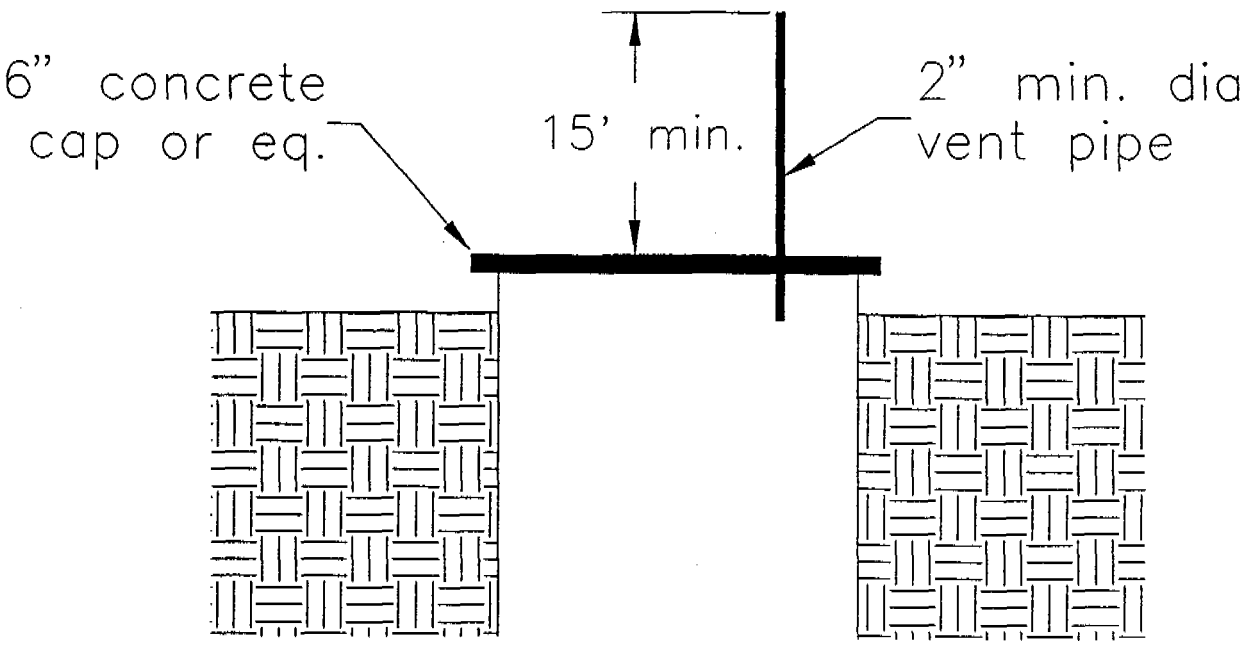

Type II Seal
Crandall Shafts

APPROVED CMS & H MAR 19 '91

APPENDIX 3.7N

DESIGN CALCULATIONS FOR PERMANENT SHAFT SEALS
IN CRANDALL CANYON

REGISTERED PROFESSIONAL ENGINEER
No. 7102
RICHARD B. WHITE
9/15/95
STATE OF UTAH

SEAL FOR AIR INTAKE SHAFTS

Criteria (New)

Use 5,000 psi concrete and 60,000 psi rebar.

- Soil density 130 pcf
- 10'-0 of soil on seal
- H-20 loading (No load distribution through soil)
- 2.5 factor of safety
- Address corrosion protection

LICENSED CERTIFIED STRUCTURAL ENGINEER
No. 152137
DALE CARL ASHTON
8/25/95
STATE OF UTAH

FACTOR OF SAFETY NOTE:

The standard factor of safety for reinforced concrete exposed to soil load is 1.7. This factor will be replaced with the 2.5 factor of safety as requested.
The standard factor of safety for steel is 1.67. This factor will be replaced with the 2.5 factor of safety also.

CORROSION PROTECTION:

The following (2) items must be addressed under corrosion:

(1). The $\frac{1}{2}$" ℄ attached to the underside of the seal, or slab, must remain as a form to support the wet concrete when poured. Once the concrete has cured, the plate serves no structural function and could be removed except that its now sealed under the concrete slab. At this point the plate serves, if galvanized and bolted to the beams, a added protection for the concrete.

(2). The structural steel shapes and plates could be galvanized to protect them from corrosion. Reinforcing steel could be coated for corrosion resistance or galvanized. This would prevent the corrosion of the shapes, plates and reinforcement.

SUPPORT BEAMS

$M = (66.3)(8.25) - (1.068)\left(\frac{8.25^2}{2}\right)$

$= 546.98 - 240.53$

$= 306.45^{k'}$

Safety Factor in steel : 1.67
increase to 2.5.

Therefore $F_b = \left(\frac{36}{2.5}\right) = \underline{14.4 \text{ ksi}}$

$S = \frac{(306.45)(12)}{14.4} = 255.38 \text{ in}^3$

Use W12x190 ←

LOADING

D.L.: 10.0 of soil @ 130 pcf
15" of concrete @ 150 pcf

$\delta = (10)(130) + (1.25)(150) = 1488 \, \#/\text{s.f.}$

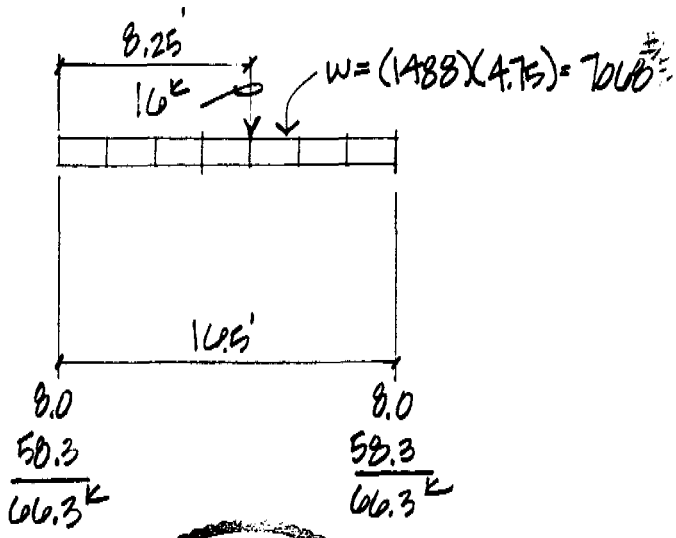

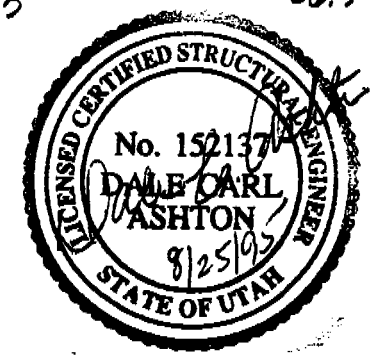

NOTE:

$\frac{1}{2}$" plate can be left as-is because its only used as a form for the concrete. See modifications to Section "B".

CONCRETE SLAB

$M = (7.53)(2.375) - (1.488)\left(\frac{2.375^2}{2}\right)$

$= 17.88 - 4.2 = 13.68^{k'}$

$M_u = (2.5)(13.68) = 34.2$

$K_u = \frac{34.2}{0.169} = 202$, $\rho = 0.0040$

$V_u = (0.85)(2\sqrt{5000})(12)(13) = 18.8^k$

$V = (7.53)(2.5) = 18.8^k$ okay

$A_s = (0.004)(12)(13)$

$= 0.624 \, \#$"

Use #5 @ 6" o/c

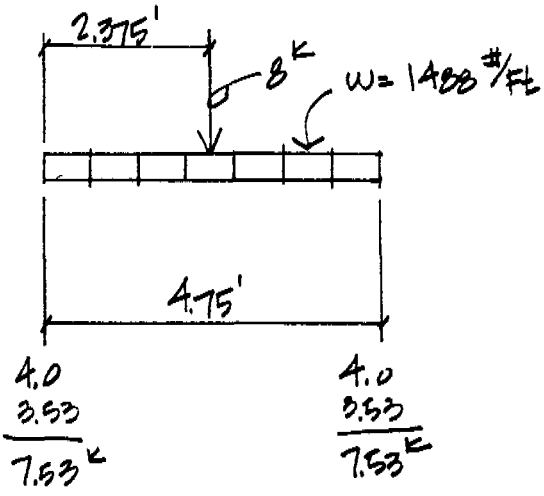

SEAL FOR SHAFT NO. 1

$M = (118.26)(12.75) - (8.648)\left(\frac{12.75^2}{2}\right)$

$= 1508 - 703 = 805^{k'}$

$S_x = \frac{(12)(805)}{14.4} = 671 \text{ in}^3$

Use W27x235 ←

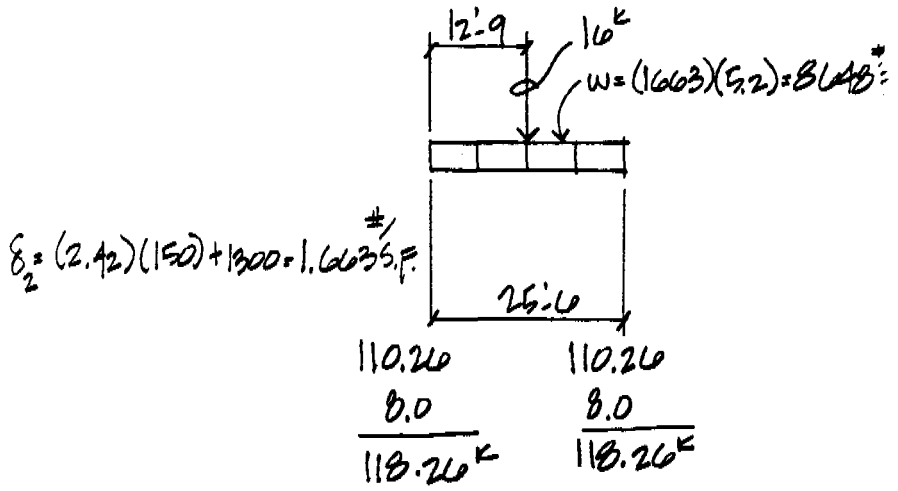

$M = (96.64)(10.25) - (8.648)\left(\frac{10.25^2}{2}\right)$

$= 991 - 454.3 = 536.7^{k'}$

$S_x = \frac{(12)(536.7)}{14.4} = 447.25 \text{ in}^3$

Use W27x161 ←

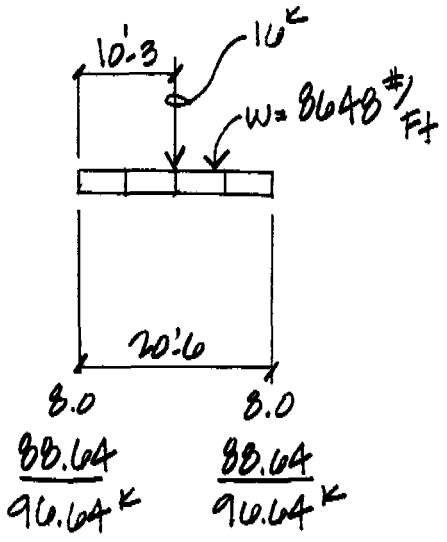

$M = (59.89)(6) - (8.648)\left(\frac{6^2}{2}\right)$

$= 359 - 155.7 = 203.3^{k'}$

$S_x = \frac{(12)(203.3)}{14.4} = 169.42 \text{ in}^3$

Use W27x84 ←

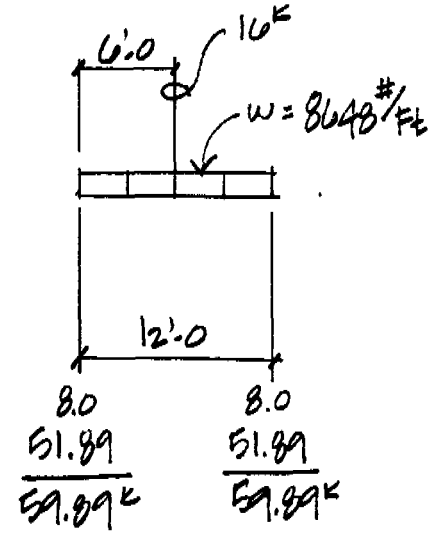

LICENSED CERTIFIED STRUCTURAL ENGINEER
No. 152137
DALE CARL ASHTON
8/25/95
STATE OF UTAH

CONCRETE BETWEEN W27's

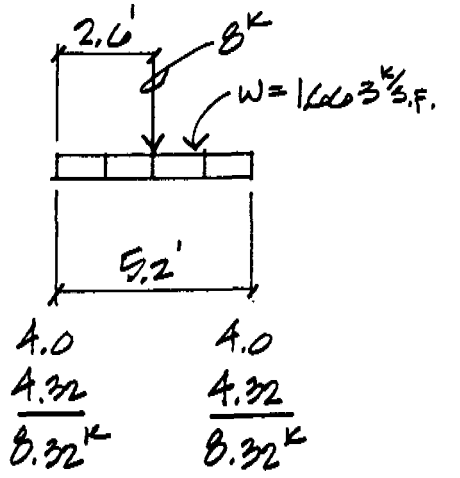

$M = (8.32)(2.6) - (1.663)\left(\frac{2.6^2}{2}\right)$

$= 21.63 - 5.62 = 16.01^{k'}$

$M_u = (2.5)(16.01) = 40.0^{k'}$

$b = 12''$, $d = (29-3) = 26''$, $F = \frac{(12)(26)^2}{12{,}000} = 0.676$

$K_u = \frac{40}{0.676} = 59.17$, $1.33K_u = 78.7$, $\rho = 0.0017$

$A_s = (0.0017)(12)(26) = 0.53 \ \square''$ Use #5 @ 6" o/c

Shear

$V_u = (0.85)(2\sqrt{5000})(12)(26) = 37.5^k$

$V_n = (2.5)(8.32) = 20.8^k < 37.5^k$ okay

LICENSED CERTIFIED STRUCTURAL ENGINEER
No. 152137
DALE CARL ASHTON
9/25/95
STATE OF UTAH

SEAL FOR SHAFT NO. 2

$\delta_3 = (2.167)(150) + 1300 = 1625\ \#/\text{S.F.}$

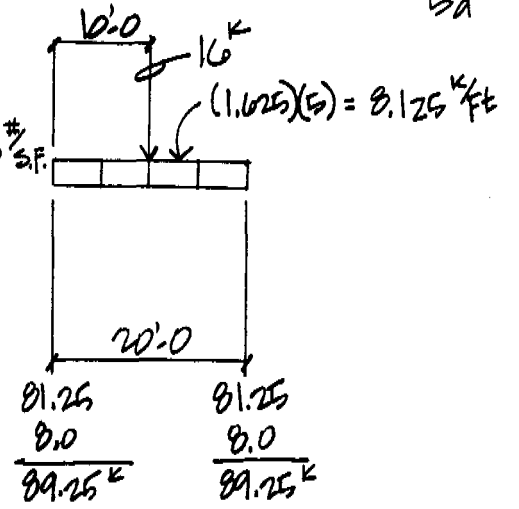

$M = (89.25)(10) - (8.125)\left(\frac{10^2}{2}\right)$

$= 892.5 - 406.25 = 486.25^{k'}$

$S_x = \frac{(12)(486.25)}{14.4} = 405.21\ in^3$

Use W24x162 ←

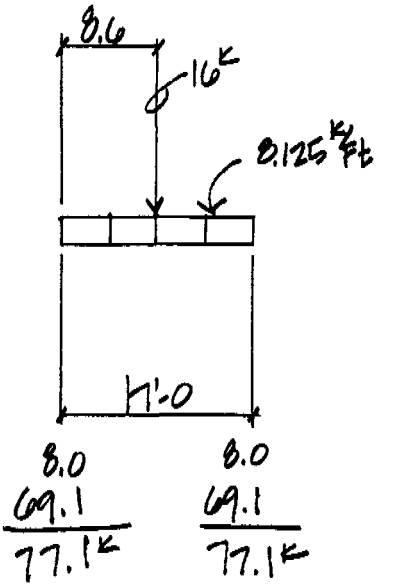

$M = (77.1)(8.5) - (8.125)\left(\frac{8.5^2}{2}\right)$

$= 655.35 - 293.52 = 361.83^{k'}$

$S_x = \frac{(12)(361.83)}{14.4} = 301.53\ in^3$

Use W24x131 ←

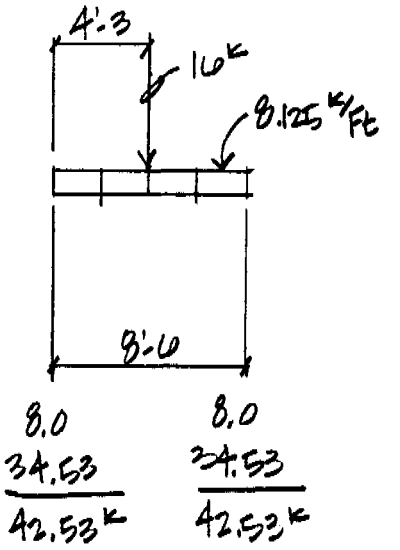

$M = (42.53)(4.25) - (8.125)\left(\frac{4.25^2}{2}\right)$

$= 180.75 - 73.4 = 107.35^{k'}$

$S_x = \frac{(12)(107.35)}{14.4} = 89.5\ in^3$

Use W24x55 ←

LICENSED CERTIFIED STRUCTURAL ENGINEER
No. 152137
DALE CARL ASHTON
8/25/95
STATE OF UTAH

CONCRETE BETWEEN W24's

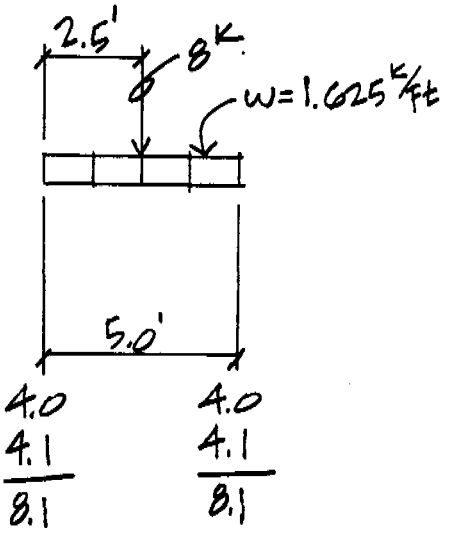

$M = (8.1)(2.5) - (1.625)\left(\frac{2.5^2}{2}\right)$

$= 20.25 - 5.08 = 15.17^{k'}$

$M_u = (2.5)(15.17) = 37.93^{k'}$

$b = 12''$, $d = (26-3) = 23''$, $F = \frac{(12)(23)^2}{12{,}000} = 0.529$

$K_u = \frac{37.93}{0.529} = 71.7$, $1.33K_u = 95.36$, $\rho = 0.0018$

$A_s = (0.0018)(12)(23) = 0.5\ \square''$ Use #5 @ 6"o/c

Shear

$V_u = (0.85)(2\sqrt{5000})(12)(23) = 33.18^k$ > $(2.5)(8.1) = 20.25^k$ okay

LICENSED CERTIFIED STRUCTURAL ENGINEER
No. 152137
DALE CARL ASHTON
8/25/95
STATE OF UTAH

SEAL FOR AIR INTAKE SHAFTS

Criteria

- Smithfax specified loads
  H20 highway load + 10'-0 of soil
- 5,000 psi concrete w/ 50,000 psi rebar

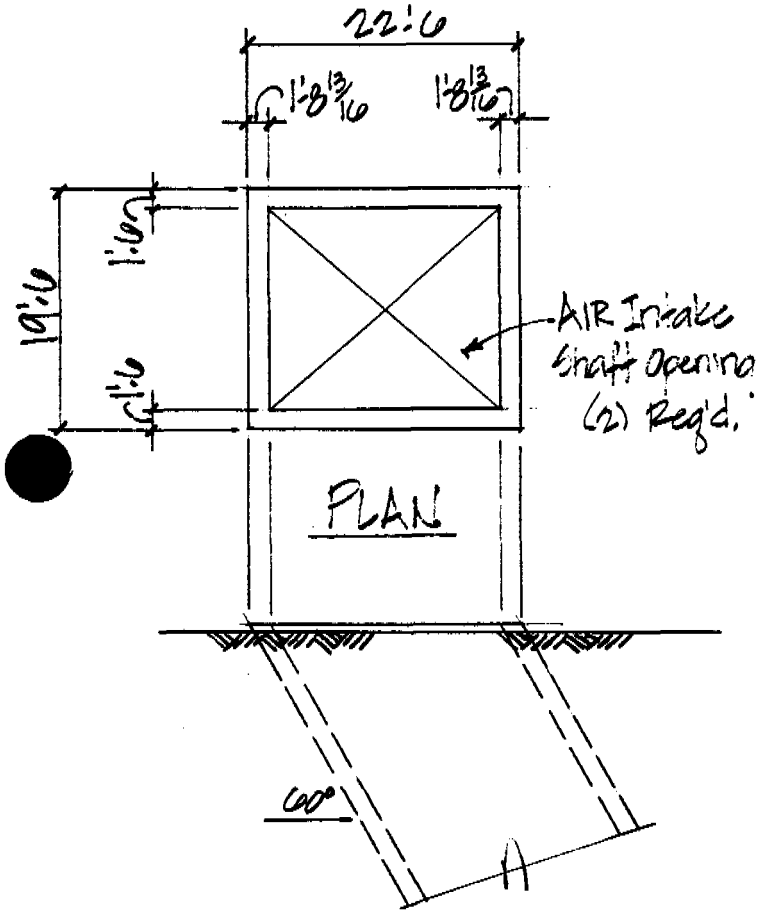

ELEVATION

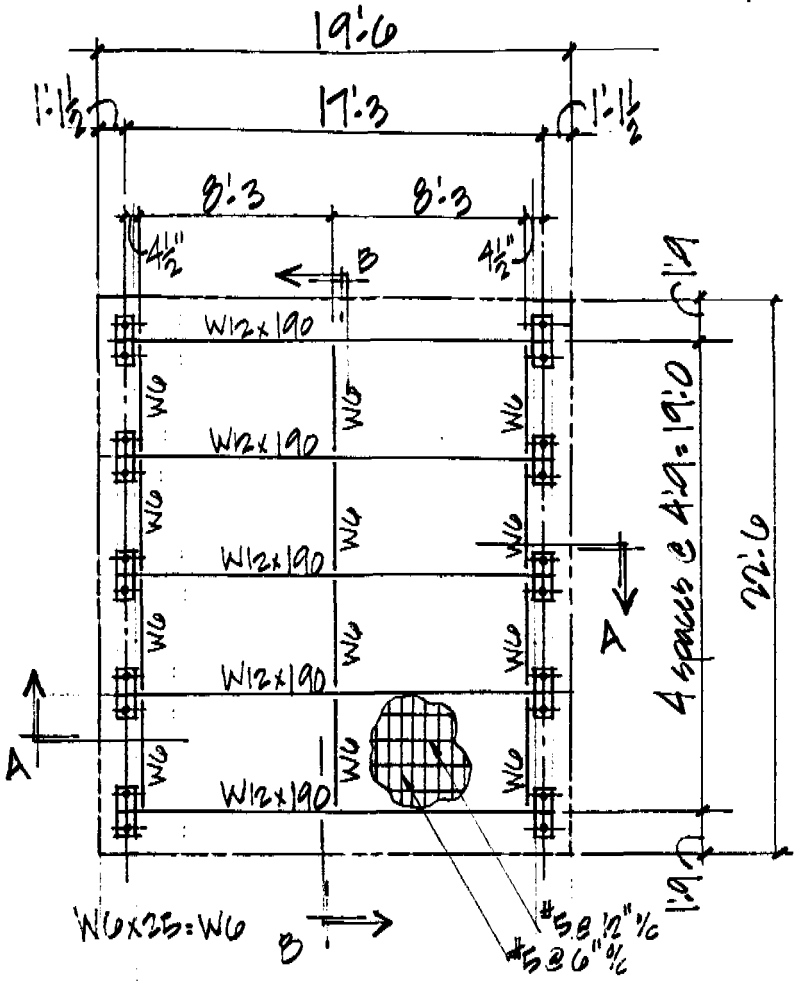

PLAN AIR SHAFTS

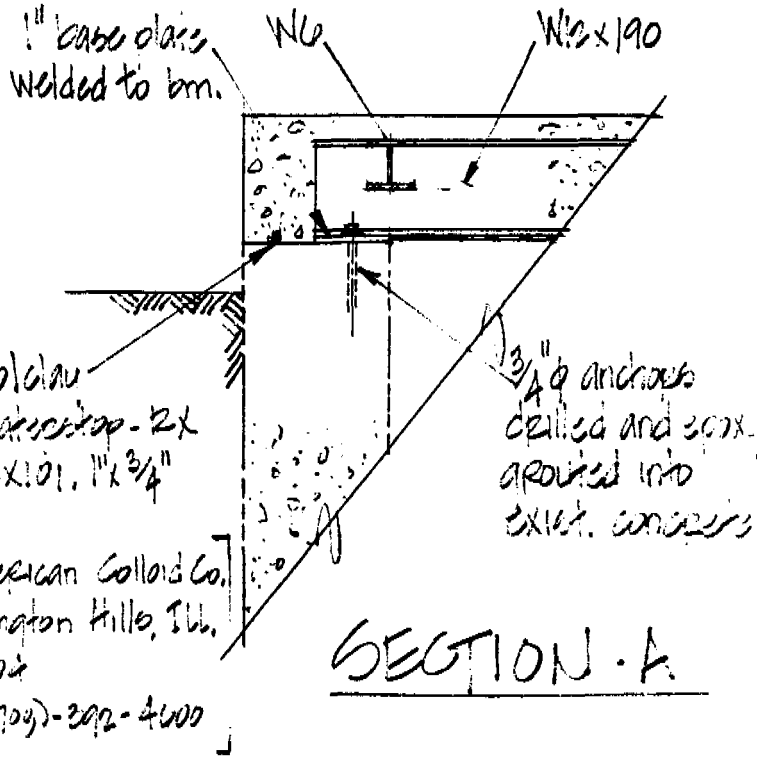

SECTION - A

LOADING

Dead Load: 4:0 of soil plus concrete cap weight

$(4)(100) + (1.25)(150) = 400 + 188 = 488\ \#/ft$

Vehicle Load: H20 highway load

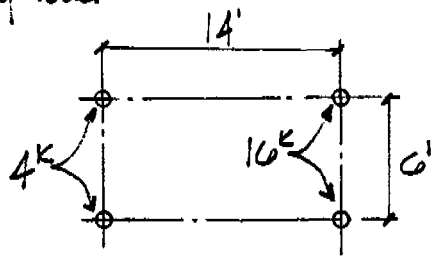

Wheel load plan

REVISED! See Sheet #2a

SUPPORT BEAMS

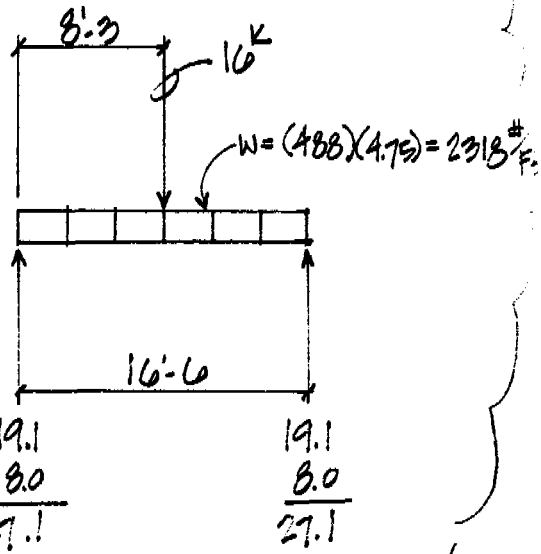

$M = (27.1)(8.25) - (2.318)\left(\frac{8.25^2}{2}\right)$

$= 223.58 - 78.88$

$= 144.7^{k'}$

$S_x = (.54)(144.7) = 78.14\ in^3$

Use W12x65

LICENSED CERTIFIED STRUCTURAL ENGINEER
No. 152137
DALE CARL ASHTON
3/4/95
STATE OF UTAH

PAN OR FORM TO HOLD CONCRETE

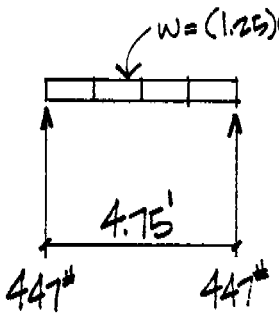

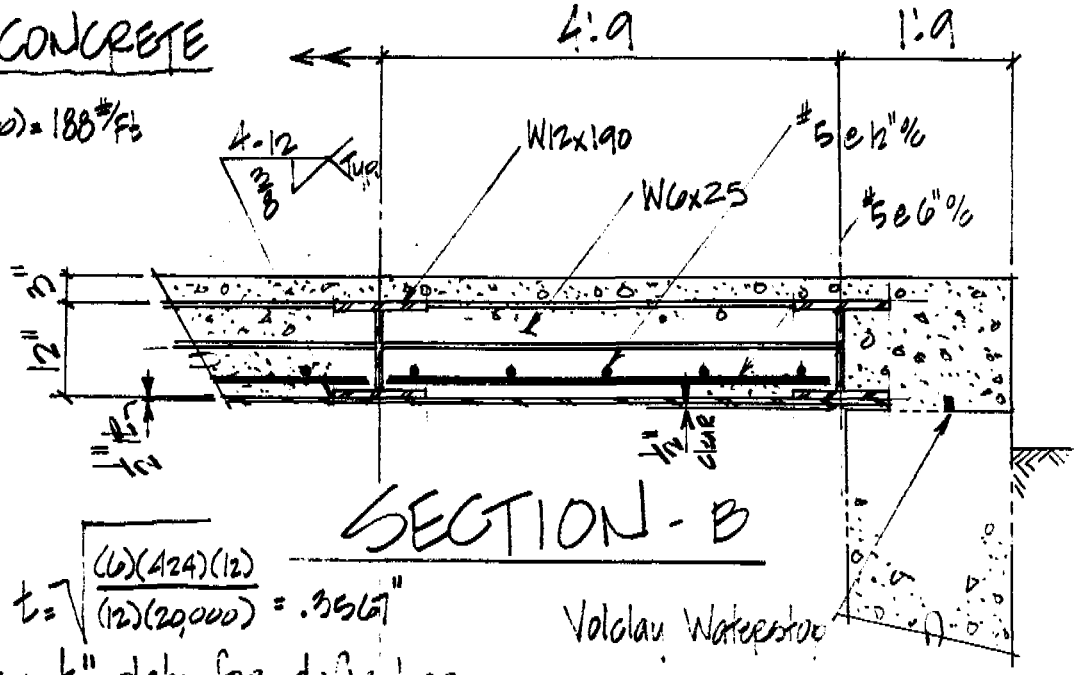

SECTION - B

Voldau Waterstop

$\frac{(188)(4.75)^2}{10} = 424\ ft\text{-}lbs$

$S_x = \frac{(12)(424)}{20{,}000} = .2544\ in^3$

$t = \sqrt{\frac{(6)(424)(12)}{(12)(20{,}000)}} = .3567"$

Use 1/2" plate for deflection

CONCRETE BETWEEN W12's

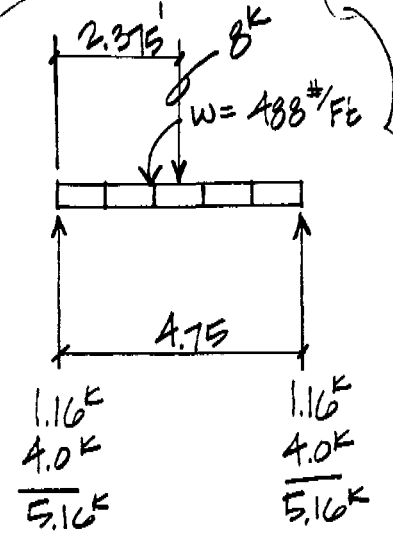

$M_1 = (5.16)(2.375) - (.488)\left(\frac{2.375^2}{2}\right)$

$= 12.26 - 1.38 = 10.88^{K'}$

$M_u = (1.6)(10.88) = 17.41^{K'}$

$b = 12''$, $d = (15-2) = 13''$, $F = \frac{(12)(13)^2}{12{,}000} = 0.169$

$K_u = \frac{17.41}{0.169} = 103.0$, $1.33 K_u = 137$, $\rho = .0026$

$A_s = (.0026)(12)(13) = 0.4056 \ \square''$ Use #4 @ 6" o/c

REVISED!

See Sheet #2a

Shear

$V_u = (0.85)(2\sqrt{3000})(12)(13) = 14.53^K > (1.6)(5.16) = 8.3^K$ okay

Revised 8/25 D. Ashton 4

SEAL FOR SHAFT NO. 1

LICENSED CERTIFIED STRUCTURAL ENGINEER
No. 152137
DALE CARL ASHTON
3/4/95
STATE OF UTAH

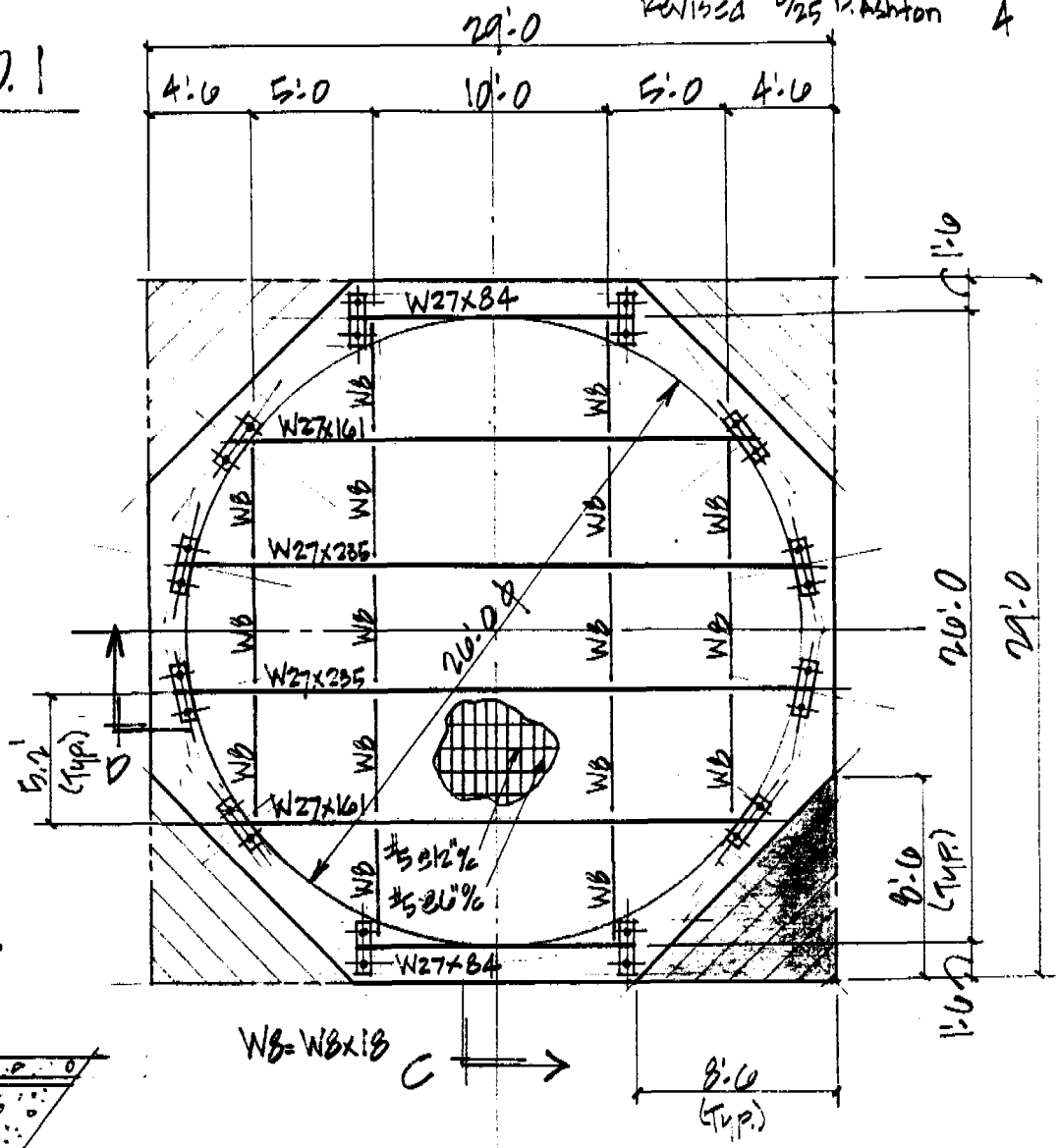

PLAN AT SHAFT NO. 1

Volclay Waterstop-RX
RX101, 1" x 3/4"

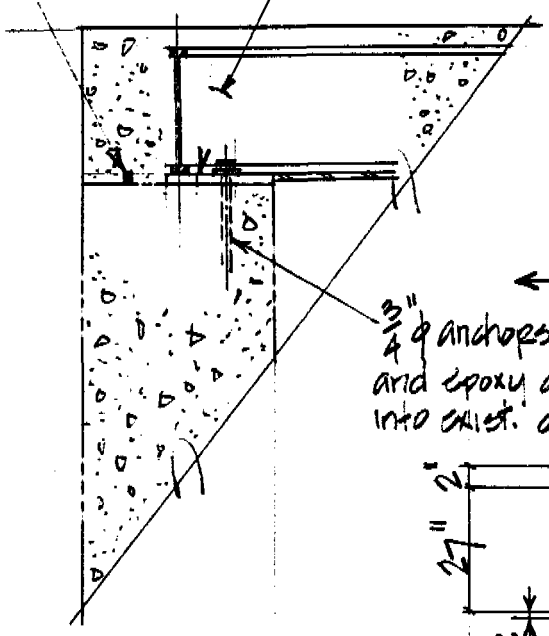

SECTION-D

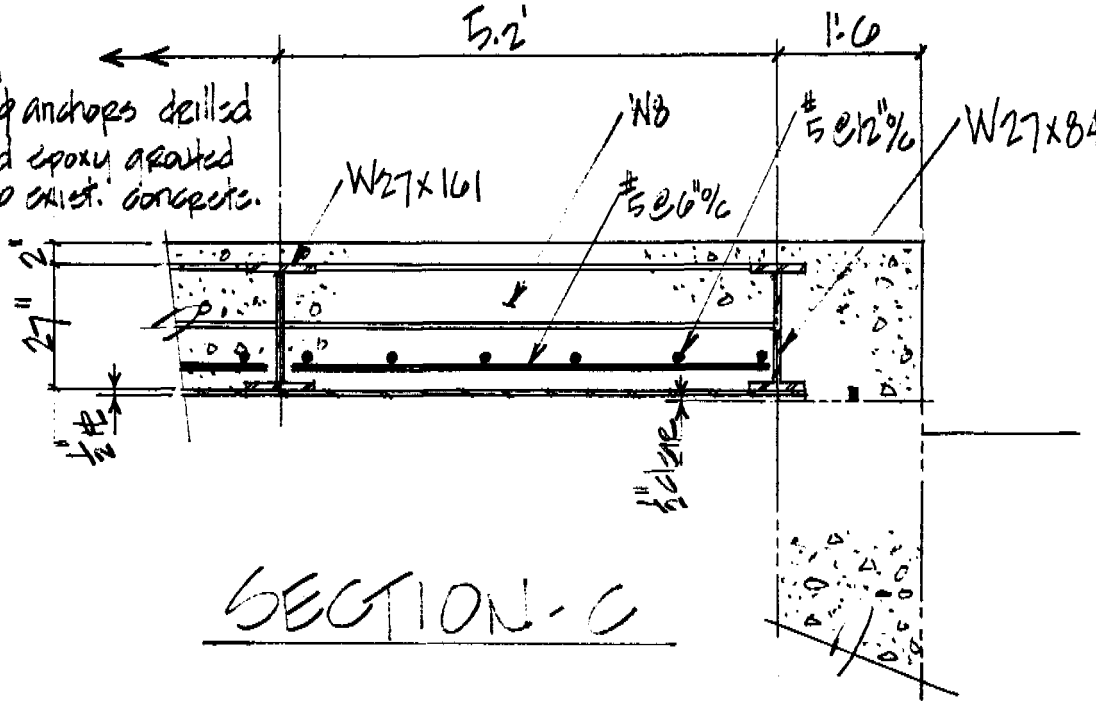

SECTION-C

SUPPORT BEAMS

REVISED!
See Sht. #3a

$M = (40.354)(12.75) - (2.538)\left(\frac{12.75^2}{2}\right)$

$= 514.51 - 206.29$

$= 308.22^{k'}$

$S_x = (.54)(308.22) = 166.44 \text{ in}^3$

Use W16x96

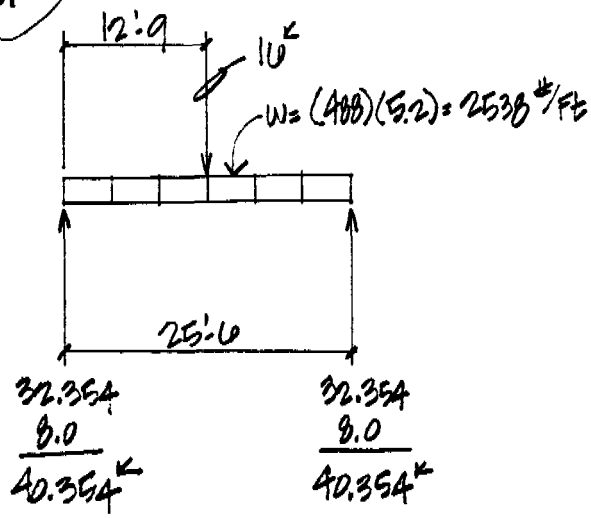

$M = (34.015)(10.25) - (2.538)\left(\frac{10.25^2}{2}\right)$

$= 348.65 - 133.32$

$= 215.33^{k'}$

$S_x = (.54)(215.33) = 116.28 \text{ in}^3$

Use W16x71

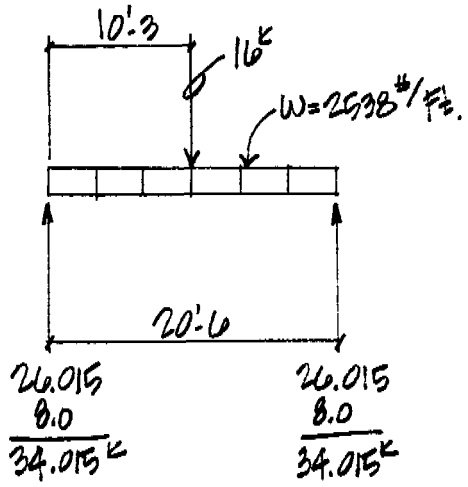

$M = (23.228)(6) - (2.538)\left(\frac{6^2}{2}\right)$

$= 139.4 - 45.68$

$= 93.716^{k'}$

$S_x = (.54)(93.716) = 50.61 \text{ in}^3$ Use W16x36

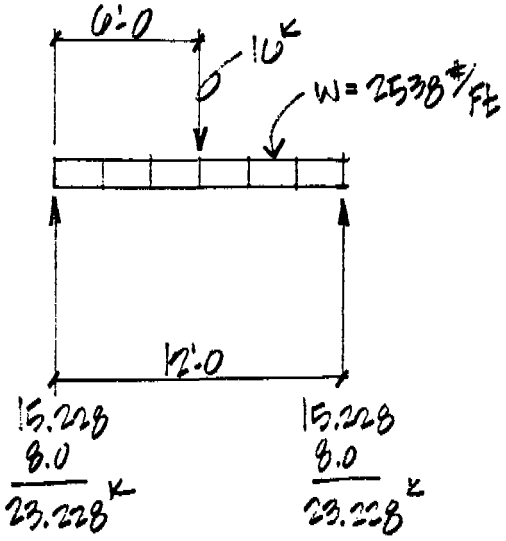

CONCRETE BETWEEN W16's

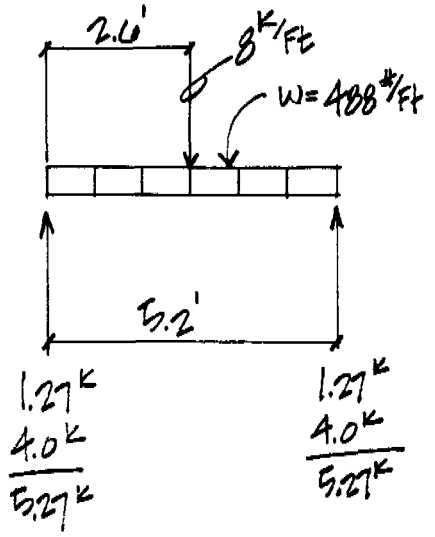

$M = (5.27)(2.6) - (.488)\left(\frac{2.6^2}{2}\right)$

$= 13.7 - 1.65 = 12.05^{k'}$

REVISED! see Sht. #4a

$M_u = (1.6)(12.05) = 19.28^{k'}$

$b = 12"$, $d = (18-2) = 16"$, $F = \frac{(12)(16)^2}{12{,}000} = 0.256$

$K_u = \frac{19.28}{0.256} = 75.31$, $1.33\,K_u = 100.17$, $\rho = .0020$

$A_s = (.002)(12)(16) = 0.3840\ \square"$ Use #4 @ 6" o/c

Shear

$V_u = (0.85)(2\sqrt{3000})(12)(16) = 17.88^k > (1.6)(5.26) = 8.42^k$ okay

SEAL FOR SHAFT NO. 2

LICENSED CERTIFIED STRUCTURAL ENGINEER
No. 152137
DALE CARL ASHTON
3/4/95
STATE OF UTAH

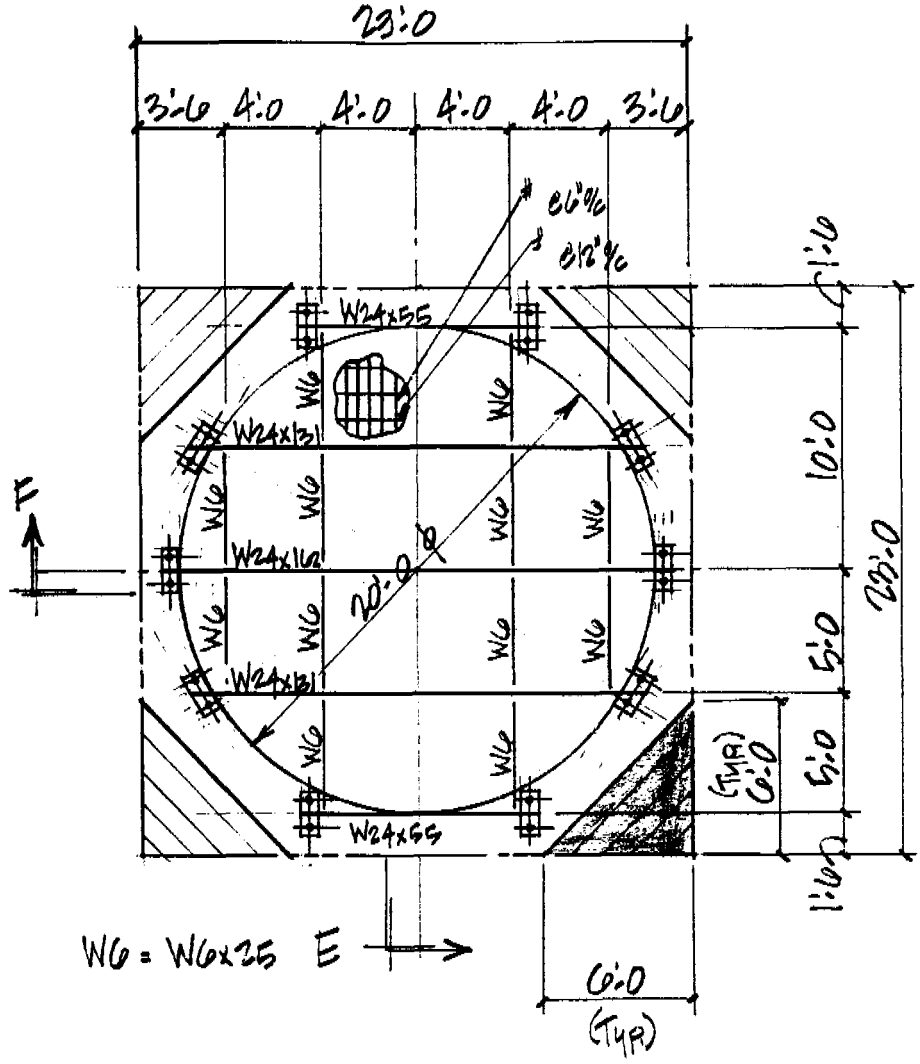

PLAN AT SHAFT NO. 2

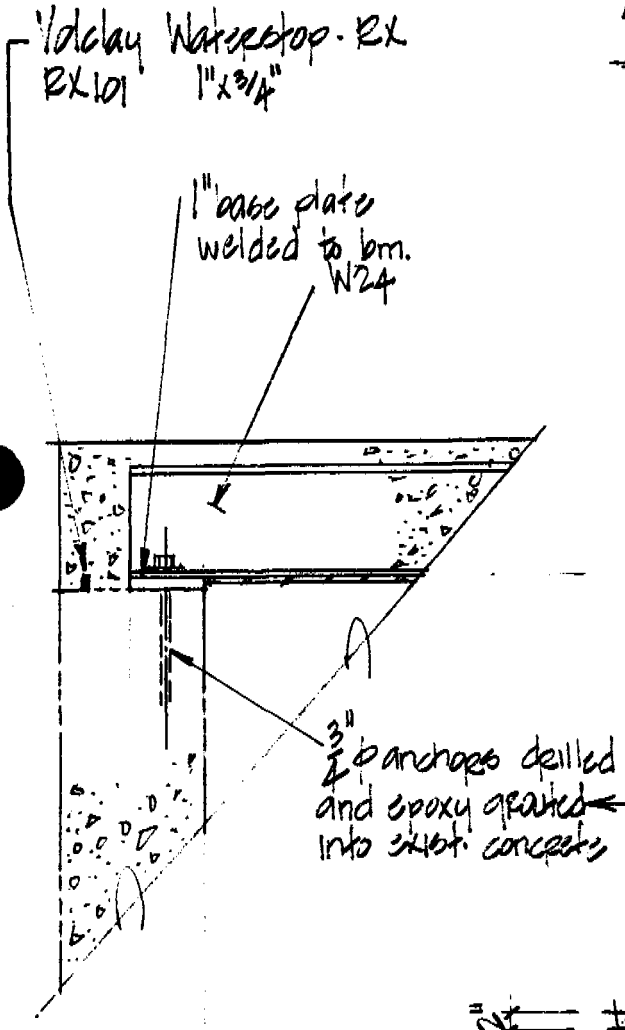

SECTION - F

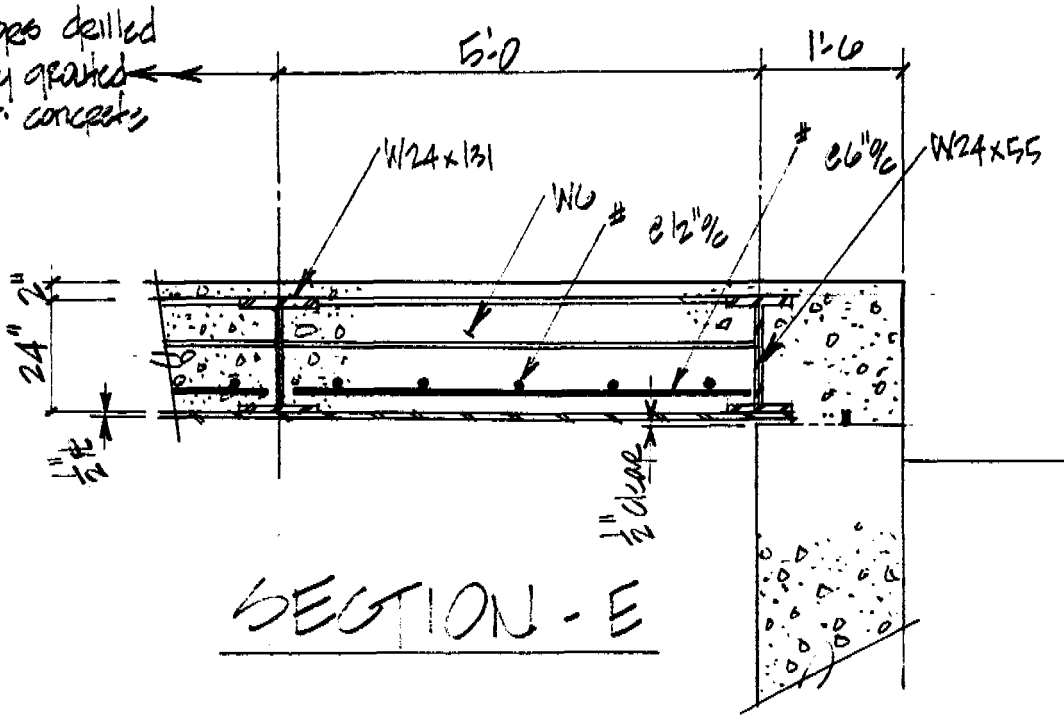

SECTION - E

SUPPORT BEAMS

REVISED! See Sht. #5a

$M = (32.4)(10) - (2.44)\left(\frac{10^2}{2}\right)$

$= 324 - 122$

$= 202^{k'}$

$S_x = (.54)(202) = 109 \text{ in}^3$

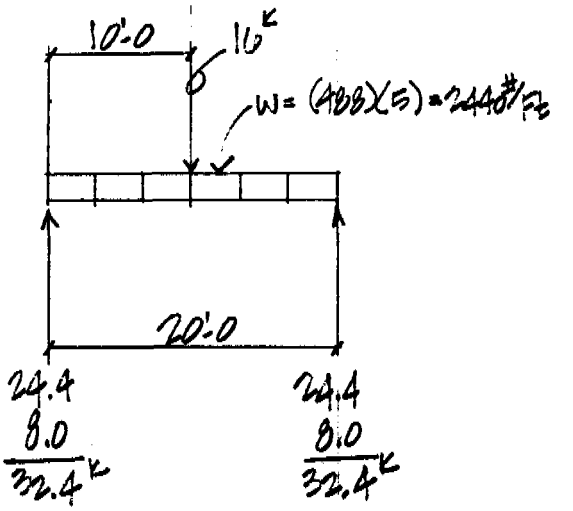

Use W14x78

$M = (28.74)(8.5) - (2.44)\left(\frac{8.5^2}{2}\right)$

$= 244.29 - 88.145$

$= 156.145^{k'}$

$S_x = (.54)(156.145) = 84.32 \text{ in}^3$

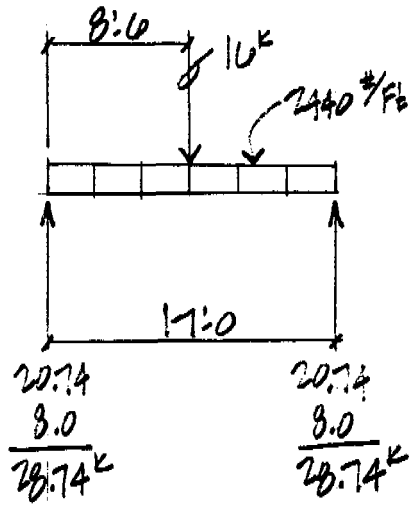

Use W14x61

$M = (18.37)(4.25) - (2.44)\left(\frac{4.25^2}{2}\right)$

$= 78.08 - 22.04$

$= 100.12^{k'}$

$S_x = (.54)(100.12) = 54.07 \text{ in}^3$

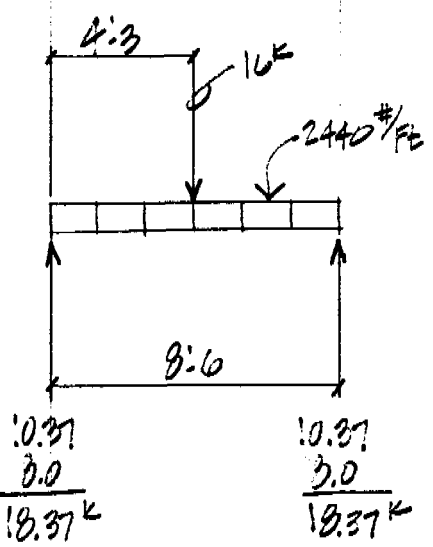

LICENSED CERTIFIED STRUCTURAL ENGINEER
No. 152137
DALE CARL ASHTON
3/4/95
STATE OF UTAH

Use W14x43

CONCRETE BETWEEN W14's

$V = (5.22)(2.5) - (.488)\left(\frac{2.5^2}{2}\right)$

$= 13.05 - 1.53 = 11.52^k$

REVISED!
See Sheet #6a

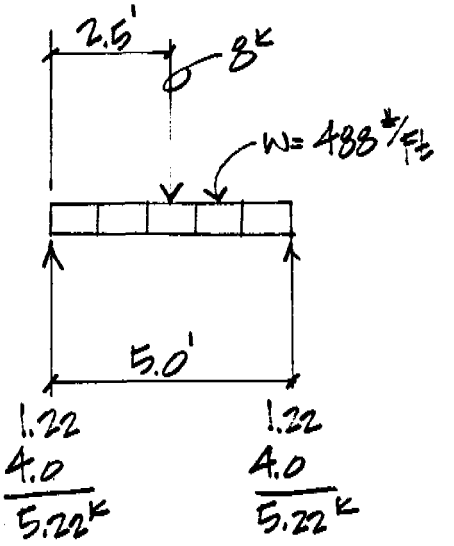

$M_u = (1.6)(11.52) = 18.43^{k'}$

$b = 12''$, $d = (16-2) = 14''$, $F = \frac{(12)(14)^2}{12{,}000} = 0.196$

$K_u = \frac{18.43}{0.196} = 94.03$, $1.33K_u = 125.1$, $\rho = .0024$

$A_s = (.0024)(12)(14) = 0.403$ □"

Use #4 @ 6" o/c

Shear

$V_u = (0.85)(2\sqrt{3000})(12)(14) = 15.04^k >$ $(1.6)(5.22) = 8.35^k$ okay

LICENSED CERTIFIED STRUCTURAL ENGINEER
No. 152137
DALE CARL ASHTON
STATE OF UTAH
3/4/95

Vent Detail

Req'd at each cap.

LICENSED CERTIFIED STRUCTURAL ENGINEER
No. 152137
DALE CARL ASHTON
3/4/95
STATE OF UTAH

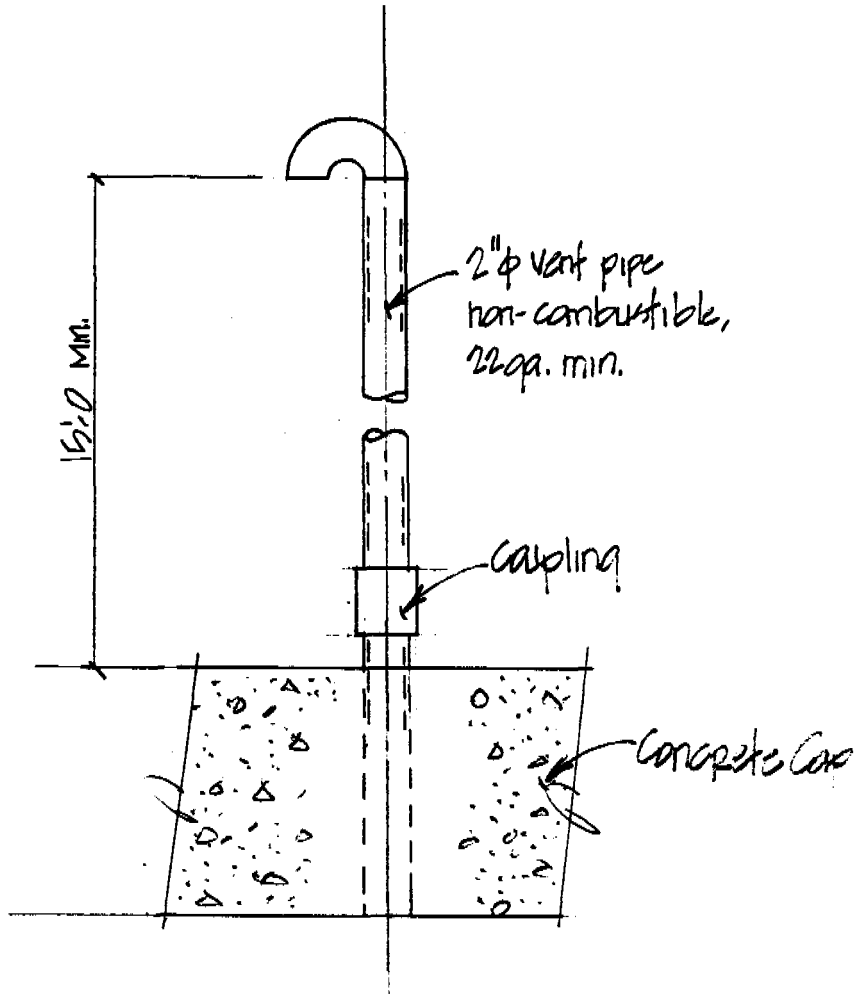

TYPICAL 2"ϕ VENT PIPE DETAIL

FIELD NOTES

Call: Jack Trackeman
627-2875
636-2248 (direct)

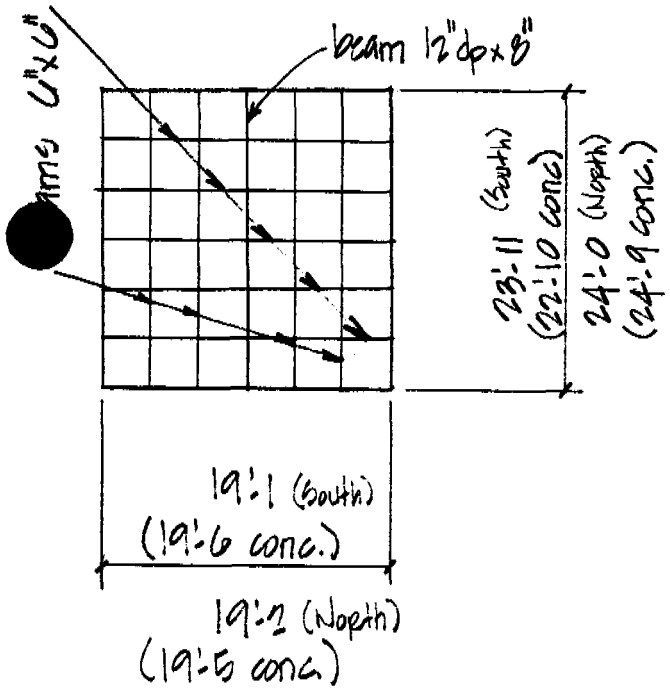

(2) AIR INTAKE SHAFTS

Existing Caps

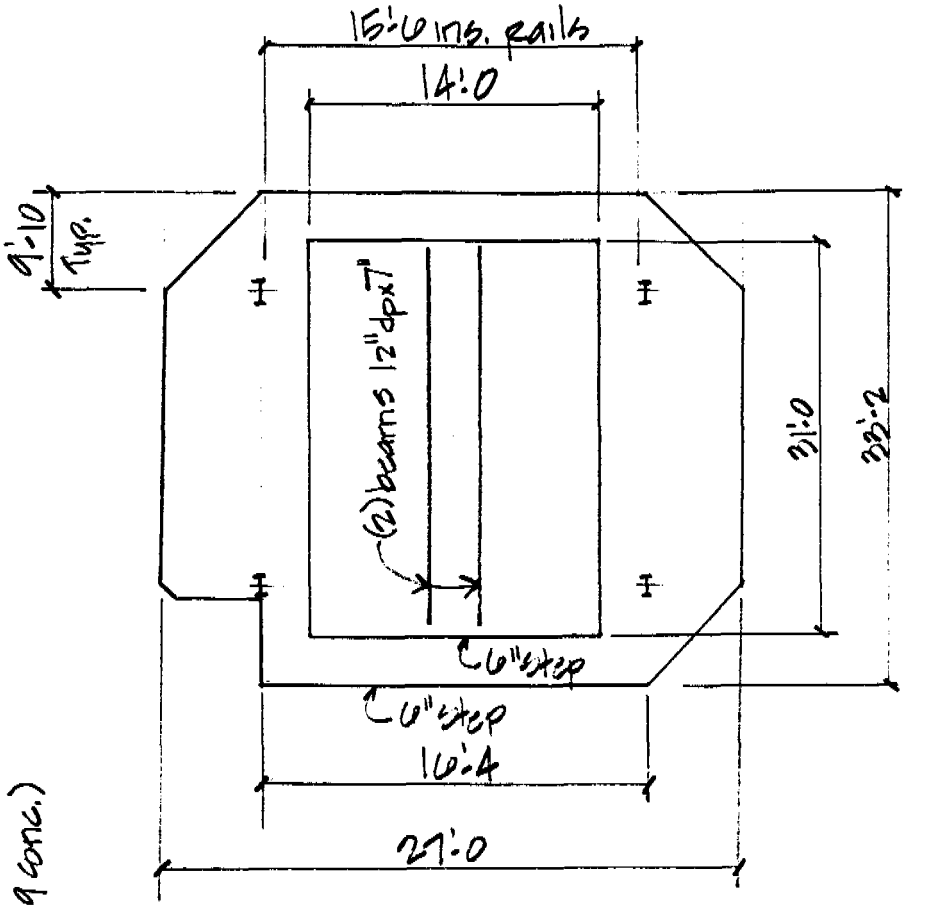

SHAFT Nº 1

Existing Cap

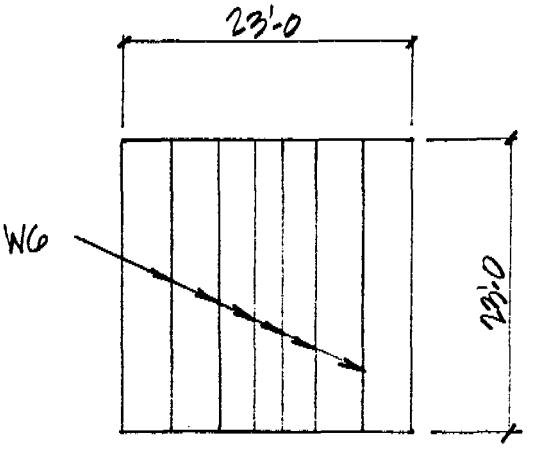

SHAFT Nº 2

EXISTING CAP

03250/AME
BuyLine 3563

VOLCLAY®

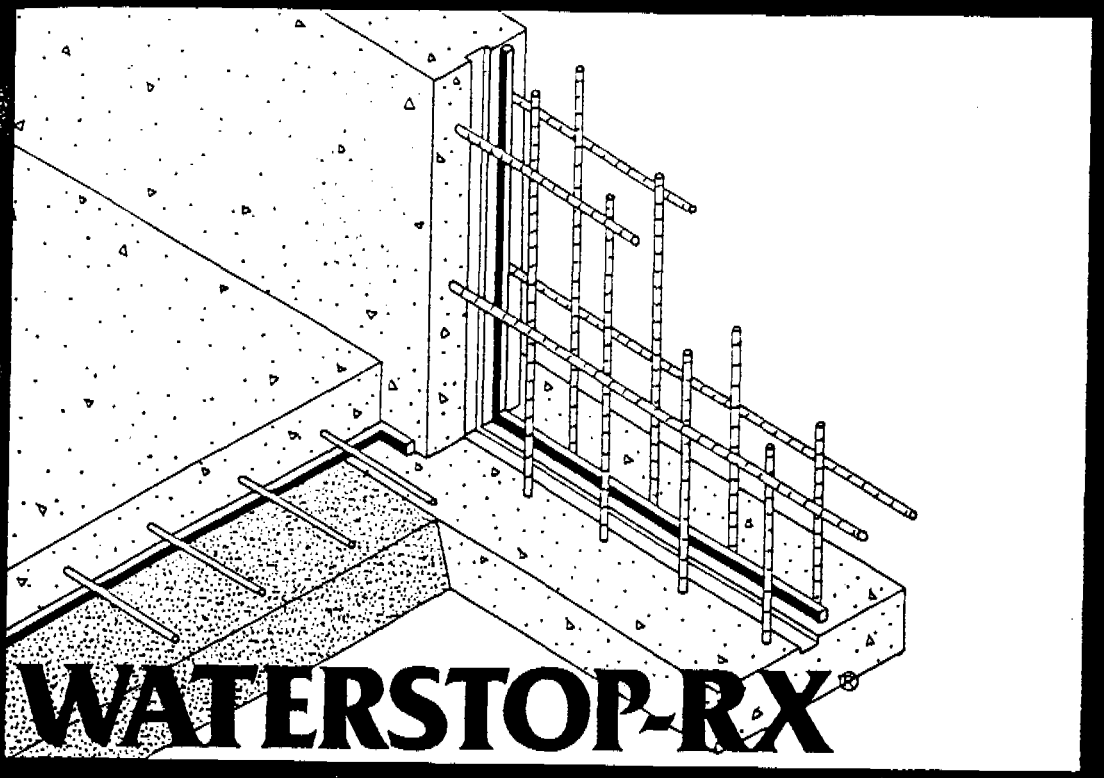

WATERSTOP-RX®

[illegible]
for concrete joints

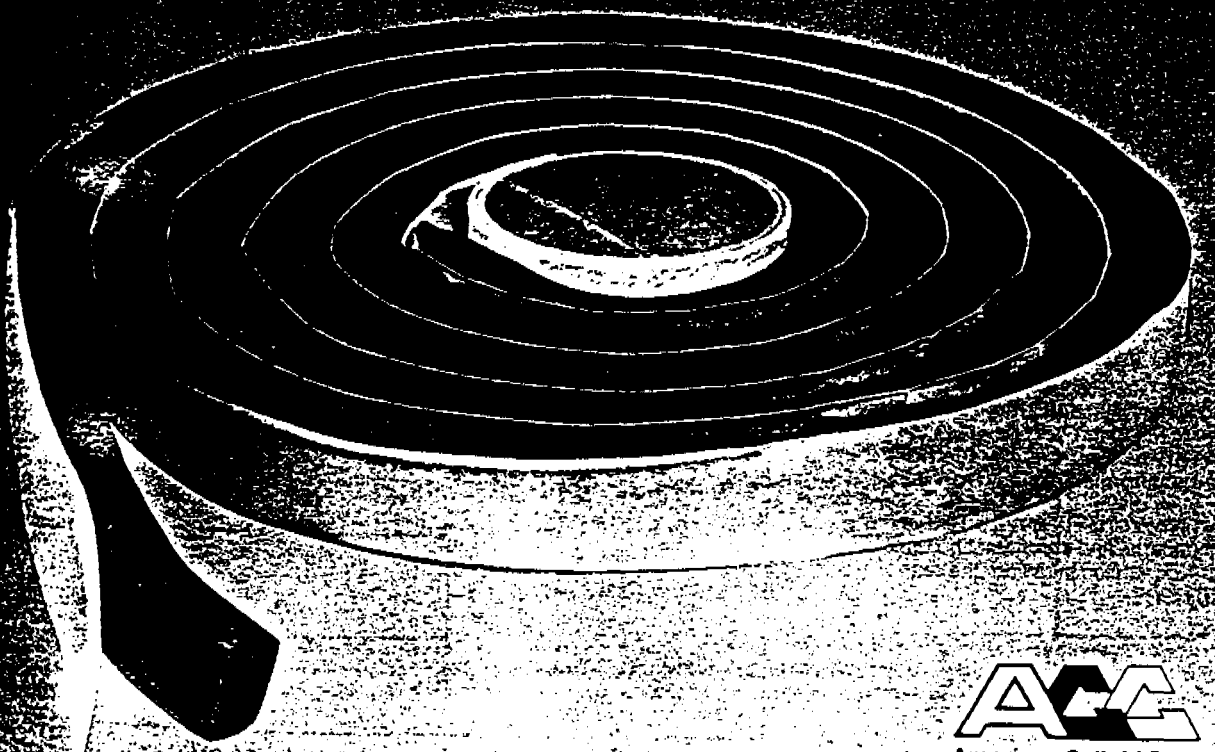

American Colloid Company

Waterstop-RX® helps save time, money... and concrete structures.

Installing conventional waterstops in concrete joints is an important (but normally time-consuming) part of concrete construction. It can also be very labor-intensive, reducing the profitability of the job. Most important, conventional waterstops offer only a partial solution to water infiltration, leaving architects, engineers, and contractors open to liability problems.

Volclay® Waterstop-RX® solves water infiltration problems. It's easy to apply even by a single, inexperienced laborer, cutting installation time in half. It eliminates split-forming and splicing. And, its self-healing properties assure that concrete joints remain protected permanently.

How Waterstop-RX works

The key to Waterstop-RX is its western sodium bentonite base. Specified for more than 20 years for foundation waterproofing, bentonite swells in contact with water, forming an impenetrable gel. This property also allows bentonite products to fill in small cracks in concrete.

Waterstop-RX comes in a coil. It is applied by adhering the material to the butt end of the concrete with RX Adhesive or concrete cut nails—an operation that requires a single laborer. Then pour or place the next section of concrete to complete the joint. No split forming, splicing, or bonding is required as with conventional waterstops.

Upon hydration, Waterstop-RX swells to form a self-healing compression seal that completely locks out water. This action also prevents water migration along the waterstop and in keyways as an extra protection against penetration.

All-temperature application

Waterstop-RX has been engineered for use under virtually all temperature conditions. Unlike other popular joint sealants, Waterstop-RX does not become stiff and brittle in cold weather nor spongy and difficult to work with in hot weather. As a result, Waterstop-RX does not have to be heated in cold weather, saving time and money. It also remains totally flexible without shrinking, hardening, or oxidizing.

Safe to use

Because Waterstop-RX is non-toxic, no special handling equipment is required. It is clean to the touch, and does not contain any material which can discolor or irritate the skin, helping eliminate lost man-hours.

Note: Waterstop-RX is not an expansion joint material and should not be used as such. Expansion joints are the responsibility of OTHERS.

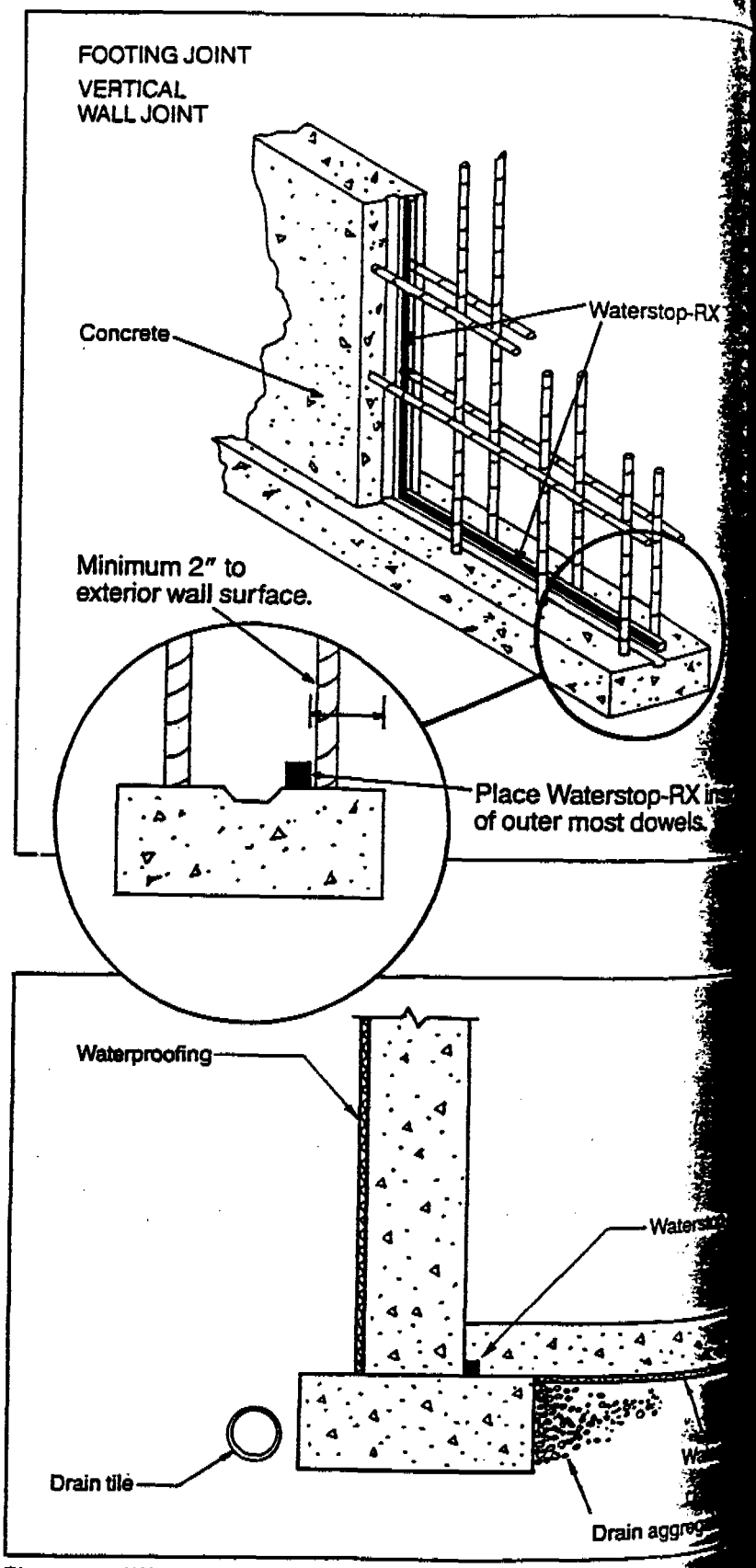

Placement of Waterstop-RX where slab rests on top of footing.

...lation procedures

...face preparation

...surfaces should be clean and dry. For ...Waterstop-RX Adhesive should be ...to the joint surface prior to adhering ...-RX, especially on vertical joints. ...adhesive creates a tacky surface which ...for excellent adherion to the concrete.

...ctioning

...-RX is adhered to the butt end ...previous concrete pour and should ...a minimum of 2" from the ...joint surface. Concrete cut nails, ...-RX Adhesive, or both must be ...to secure Waterstop-RX in place to ...displacement of the material during ...

...-RX may also be installed in a ...place recess at the exterior side of ...In this situation, precautions must ...to protect Waterstop-RX from ...prior to backfilling and backfill ...compacted to 85% modified proctor ...adjacent to the joint. The ...at the exterior of the joint should ...the dimension of Waterstop-RX.

...ends of individual Waterstop-RX ...should be butted together—never ...

...pplications

...-RX is ideal for use on many ...of poured in place and below grade ...concrete applications. There should ...a minimum of 2" of concrete cover sep-...the exterior face of the Waterstop-...from the exterior side of the joint.

...: In cases of lightweight concrete ...insufficient coverage, consult the ...

...concrete wall panel systems

...tanks and sewage treatment plants

...and storm sewer manholes

...(round, oval, flatbase, elliptical, and ...types)

...joints in foundation slabs or walls ...grade

...vaults — Utility vaults

...walls — Box culverts

...water treatment plants

...water tanks

...Waterstop is available in two sizes as ...within the technical information on ...next page. The smaller size (RX 102) is ...used in smaller joints.

...which size RX Waterstop is used, ...require a minimum concrete coverage ...2" from the exterior wall surface.

...: Waterstop-RX is not an expansion ...material and should not be used as ...Expansion joints are the responsibility ...OTHERS.

Typical sections showing placement of Waterstop-RX

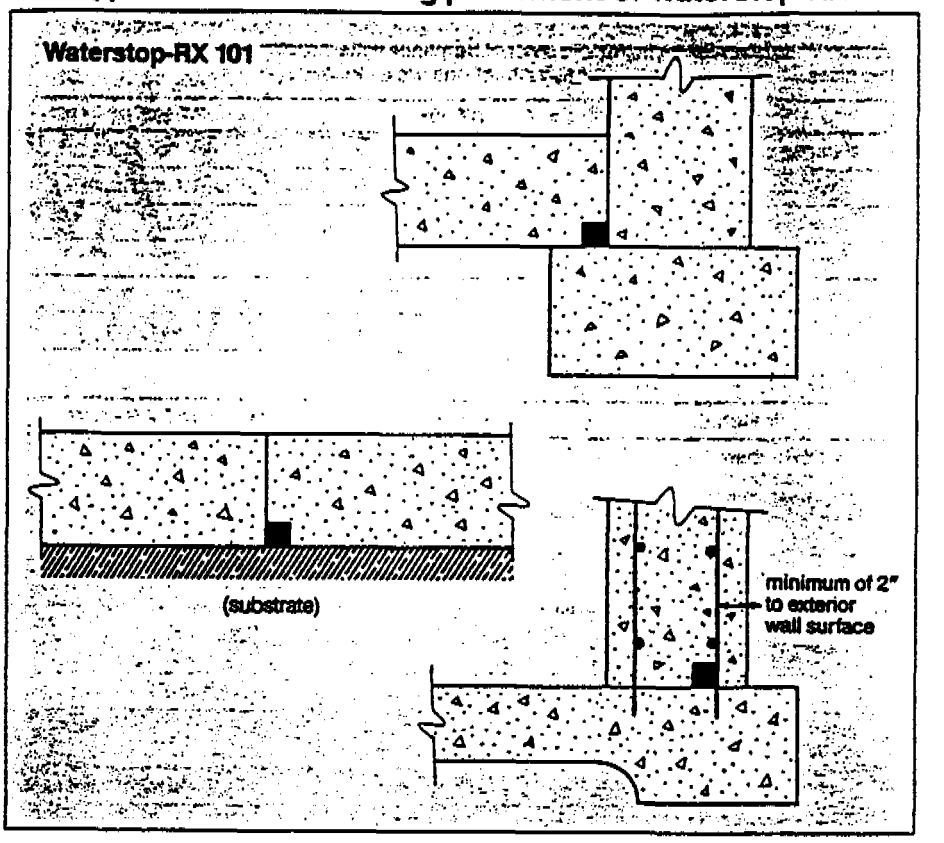

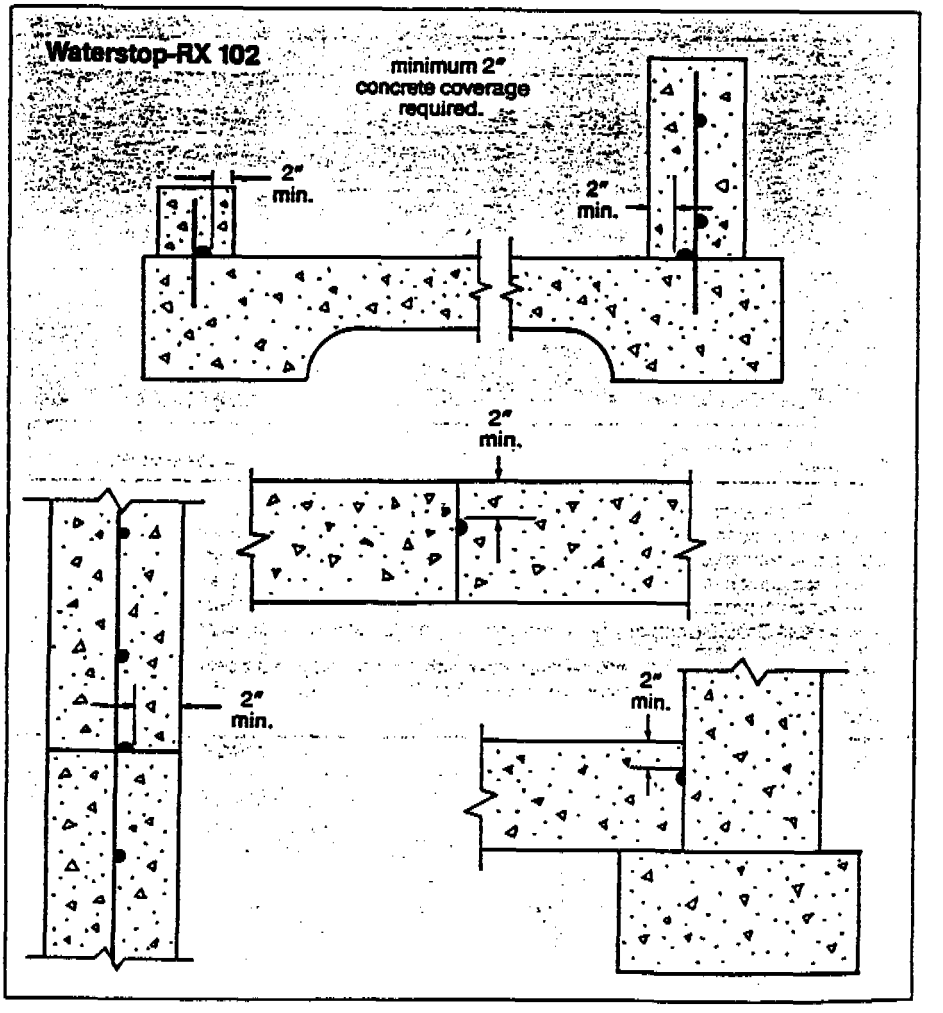

Waterstop-RX® Technical Information

Volclay Waterstop-RX® is a flexible strip of bentonite waterproofing compound, coiled in two sizes. Dimensions and other specifications are as follows:

	RX 101	RX 102
Dimensions	1" × ¾" × 16'6"	¾" × ⅜" × 25'0"
Weight	.50 lbs./ft. minimum	.165 lbs./ft. minimum
Carton Contents	100 L/F	150 L/F
Carton Weight	50 lbs.	25 lbs.
Carton Size	10" × 14" × 10"	8" × 14" × 10"
Pallet Size	4' × 4'	4' × 4'

Chemical Composition

Material	Test Method	Waterstop-RX Results
Butyl Rubber-Hydrocarbon (% by weight)	ASTM D-297	24.9%
Bentonite	SS-S-210-A	75.0%
Volatile matter	ASTM D-6	Below 1%

NOTE: Contains no asbestos fibers or asphaltics.

Physical Properties

Property	Test Method	Waterstop-RX Results
Specific gravity at 77°F	ASTM D-71	1.57
Softening point	ASTM D-30	N/A
Penetration	ASTM D-217 150 GTL 300 GTL	 58 85
Flash point	ASTM D93-97	365
Min. head pressure	Hydrostatic pressure test	231 ft. (100 psi)
Accelerated aging	(Mechanical oven 4 hrs. @ 212° F)	Maintained 99% solids
Flow resistance	(¾" overhead joint exposed to 135° F for 7 days)	No flow
Storage life		Indefinite
Adhesion to clean, dry concrete		Excellent
Application temperature range		5° to 125°F
Service temperature range		−40° to 212°F

Notice: The information presented here is believed to be correct. However, since it is provided without charge and without specific knowledge of the intended use or application of its product, American Colloid Company assumes no obligation or liability with respect to such use or application, and makes no warranty, either expressed or implied, as to the application or use of such product, or to the use or infringement of any patent or other proprietary rights of American Colloid Company or others with respect to such application or use.

Seal concrete joints quickly and permanently with the waterstop that heals itself—Waterstop-RX. For more information, contact your American Colloid Company distributor, or contact us direct.

Limitations

In conditions where severe ground wa contamination is expected, please co the manufacturer for compatibility info mation. Waterstop-RX should be confi within a concrete joint with a minimum concrete cover to the exterior of the jo surface. Waterstop-RX may also be inst in a cast-in-place recess at the exterior side of the joint. In this situation, preca tions must be taken to protect Waterstop RX from hydration prior to backfilling a backfill must be compacted to 85% of modified proctor minimum adjacent to the joint. The cast in place recess shou match the dimension of the Waterstop being used.

An exposed length of coil should not be submerged for extended periods of time If Waterstop-RX exhibits considerable swelling prior to confinement in the jo it must be replaced with new material. T avoid displacement of Waterstop-RX du or prior to concrete placement, cut nail and/or Waterstop-RX Adhesive must be used to hold the material in place. Prop care should be taken during concrete pla ment to avoid displacing the Waterstop strip. Waterstop-RX is not an expansion joint product and should not be used as such.

NOTE: In cases of lightweight concrete or insufficient coverage, consult the manufacturer.

Warranty

American Colloid Company warrants th rials to be of good quality and will repla material proved to be defective. In no ev will American Colloid Company be liab labor costs or incidental damage assoc with the use of this product, unless sta in a warranty for a specific project.

Document

This brochure contains information to s plement information service available f American Colloid Company's Building rials Division and from local distributors

Application Assistance

Local distributors of Waterstop-RX are fied to aid in solving problems related of this product. In the event that your are special or you have an unusual sit your local Waterstop-RX distributor will arrange to have a factory representative contact you for personal assistance.

Protected under patent nos. 4534925 and 45

Distributed by:

WARRANTY

The information and data contained herein are believed to be accurate and reliable. Specifications and other information contained herein supersede all previously printed material and are subject to change without notice.

Manufacturer warranty of installed system is available. Contact seller for terms and sample document including all limitations.

All goods sold by seller are warranted to be free from defects in material and workmanship.

The foregoing warranty is in lieu of and exclude all other warranties not expressly set forth herein, whether express or implied by operation of law or otherwise including but not limited to any implied warranties of merchantability or fitness.

Seller shall not be liable for incidental or consequential losses, damages or expenses, directly or indirectly arising from the sale, handling or use of the goods, or from any other cause relating thereto, and seller's liability hereunder in any case is expressly limited to the replacement (in the form originally shipped) of goods not complying with this agreement or at seller's election, to the repayment of, or crediting buyer with, an amount equal to the purchase price of such goods, whether such claims are for breach of warranty or negligence.

Any claim by buyer with reference to the goods sold hereunder for any cause shall be deemed waived by buyer unless submitted to seller in writing within thirty (30) days from the date buyer discovered or should have discovered, any claimed breach.

Materials should be inspected and tested by purchaser prior to their use if product quality is subject to verification after shipment. Performance guarantees are normally supplied by the applicator.

NOTE: Expansion joints shall be the responsibility of OTHERS.

American Colloid Co
Building Materials Divisi
1500 W. Shure Drive
Arlington Heights, IL 60
1-708-392-4600
FAX 708-506-6199 and
TELEX ITT 4330321

September 1995

APPENDIX 3.70

RECLAMATION HYDROLOGY RUNOFF CALCULATIONS FOR CRANDALL CANYON

REGISTERED PROFESSIONAL ENGINEER
No. 7102
RICHARD B. WHITE
9/15/95
STATE OF UTAH

APPENDIX 3.7U

POST RECLAMATION CUTSLOPE JUSTIFICATION FOR CRANDALL CANYON

REGISTERED PROFESSIONAL ENGINEER
No. 7102
RICHARD B. WHITE
3/14/96
STATE OF UTAH

POST RECLAMATION CUTSLOPES

The purpose of this appendix is to present information concerning those areas within Crandall Canyon where portions of cutslopes are anticipated to remain after reclamation activities have been completed. The cutslopes to remain were identified during a field reconnaissance of the area on February 2, 1996. The height and length of each existing cutslope was estimated. The distance to undisturbed channels or reclamation channels was estimated in areas where backfilling the cutslope completely with material at a 2:1 slope would encroach upon the channels. Finally, the length and height of the cutslopes to remain was estimated.

Four cutslopes are anticipated to partially remain after reclamation activities have been completed in Crandall Canyon. These cutslopes are illustrated on Exhibits 3.7-7B and 3.7-7C and labeled as PRCS-1 through PRCS-4 (PRCS- post reclamation cutslope). PRCS-1 and PRCS-2 will be located south of Shaft No. 1. PRCS-3 and PRCS-4 are located adjacent to primary road P-1. The following is a brief description of each remaining cutslopes, and where possible, photographic evidence supporting the proposal to leave portions of cutslopes is presented.

PRCS-1

PRCS-1 is located south of Shaft No.1 and west of the electric substation. The existing cutslope is approximately 200 feet long on a north-south axis and has a maximum height of approximately 30 feet above the surrounding area. The northern portion of this cutslope may partially remain in place because of its proximity to the proposed reclamation channel that will convey runoff from watershed CCRWS-U30. To fully reclaim the cutslope with backfill at a slope of 2:1 or less would displace the channel farther east and closer to Shaft No. 1 than would be acceptable or safe. It is anticipated that a segment approximately 80 long and 8 to 10 feet high will remain. Photo 1 illustrates the approximate length and height of the exposed post reclamation cutslope.

Photo 1. Post Reclamation Cutslope PRCS-1. Dark line indicates approximate height of reclamation backfill. Note the existing exposed ledges above the cutslope.

PRCS-2

PRCS-2 is located south of Shaft No. 1 and east of the electric substation. The cutslope is approximately 200 feet long and has a maximum height of approximately 65 feet near its southern end. A portion of the cutslope will remain due to its proximity to the proposed reclamation channel that will convey runoff from watershed CCRWS-U30. Because of the relatively narrow canyon in which it is located, a reclamation slope of 2:1 or less would move the channel farther to the west and require a greater portion of cutslope PRCS-1 to remain. It is anticipated that a segment approximately 150 feet long and 15 feet high could remain. No photo was available for this area.

PRCS-3

PRCS-3 is located northeast of sediment pond 014 and adjacent to primary road P-1. The existing cutslope in this area is approximately 750 feet long with a maximum height of approximately 30 feet. Within the shaded area on Exhibit 3.7-7B, the base of the cutslope is approximately 50 feet from the undisturbed stream channel. A maximum backfill slope of 2:1 would allow coverage of approximately 25 feet of the cutslope. It is anticipated that the portion of the cutslope to remain will be approximately 80 feet long and at least 5 feet high. The channel rapidly moves away from the road outslope both upstream and downstream of this location, thus allowing for a greater height of backfill to be placed against the cutslope. Photo 2 illustrates the approximate height of the reclamation slope.

PRCS-4

PRCS-4 is located adjacent to primary road P-1 and northwest of topsoil stockpile No. 2. The existing cutslope is approximately 850 feet long with a maximum height of approximately 35 feet. In the area where the cutslope is anticipated to partially remain, the stream channel is approximately 65 feet east of the base of the cutslope. The maximum

Photo 2. Post Reclamation Cutslope PRCS-3. The dark line indicates the approximate height of the reclamation backfill. Note the exposed sandstone ledge above the proposed height of reclamation backfill.

Photo Montage of PRCS-4. Dark line indicates approximate height of reclamation backfill. Exposures of sandstone ledges are common in this area.

height of the cutslope in this area is approximately 40 to 45 feet above the stream channel. With a 2:1 reclamation slope, a discontinous cutslope varying in height between approximately 7 to 12 feet will remain (Exhibit 3.7-7C). The channel moves away from the cutslope both up and down stream of this location. Where the channel moves away from the cutslope, longer and higher backfill slopes can be created. This will allow the remainder of the cutslope to be reclaimed. The attached photo montage of PRC-4 (previous page) illustrates the approximate height of the fill and demonstrates how this cutslope will blend with existing topography.

Crandall Canyon Reclamation Hydrology

scale: 1" = 500 ft

Watershed area #1

AREA

Map Area		Actual Area	
sq. in.	13770187 sq. ft.		316.1 acres

AVERAGE WATERSHED SLOPE

Max. Elev.	8120	Min. Elev.	6400	Difference	1720

	Elevation	Length (in.)	Length (ft.)
0.25	6830	12	6000
0.5	7260	11.4	5700
0.75	7690	7.5	3750

Ave Watershed Slope= 48.2 %

Hydraulic Length

Map Length	Actual Length
15.6 inches	7800 feet

TIME OF CONCENTRATION

Curve Number =	65	S =	5.385	Lag	0.360

Time of Concentration = 0.601 hrs

Watershed area #2

AREA

Map Area		Actual Area		
7.58	sq. in.	1895000 sq. ft.	43.5	acres

AVERAGE WATERSHED SLOPE

Max. Elev. 8080 Min. Elev. 6720 Difference 1360

	Elevation	Length (in.)	Length (ft.)
0.25	7060	1.6	800
0.5	7400	2.2	1100
0.75	7740	2.1	1050

Ave Watershed Slope= 52.9 %

Hydraulic Length

Map Length	Actual Length
5.7 inches	2850 feet

TIME OF CONCENTRATION

Curve Number = 65 S = 5.385 Lag 0.154 hrs

Time of Concentration = 0.256 hrs

Watershed area #3

AREA

Map Area		Actual Area		
0.61	sq. in.	152500 sq. ft.	3.5	acres

AVERAGE WATERSHED SLOPE

Max. Elev. 7080 Min. Elev. 6720 Difference 360

	Elevation	Length (in.)	Length (ft.)
0.25	6810	0.9	450
0.5	6900	0.55	275
0.75	6990	0.2	100

Ave Watershed Slope= 48.7 %

Hydraulic Length

Map Length	Actual Length
1 inches	500 feet

TIME OF CONCENTRATION

Curve Number = 65 S = 5.385 Lag 0.040 hrs

Time of Concentration = 0.066 hrs

Watershed area #4

AREA

Map Area		Actual Area		
8.19	sq. in.	2047500	sq. ft.	47.0 acres

AVERAGE WATERSHED SLOPE

Max. Elev. 8200 Min. Elev. 6780 Difference 1420

	Elevation	Length (in.)	Length (ft.)
0.25	7135	2.4	1200
0.5	7490	2.35	1175
0.75	7845	1.6	800

Ave Watershed Slope= 55.0 %

Hydraulic Length

Map Length	Actual Length
6.1 inches	3050 feet

TIME OF CONCENTRATION

Curve Number = 65 S = 5.385 Lag 0.159 hrs

Time of Concentration = 0.265 hrs

Watershed area #5

AREA

Map Area		Actual Area		
0.72	sq. in.	180000	sq. ft.	4.1 acres

AVERAGE WATERSHED SLOPE

Max. Elev. 7260 Min. Elev. 6780 Difference 480

	Elevation	Length (in.)	Length (ft.)
0.25	6900	0.45	225
0.5	7020	0.35	175
0.75	7140	0.2	100

Ave Watershed Slope= 33.3 %

Hydraulic Length

Map Length	Actual Length
1.6 inches	800 feet

TIME OF CONCENTRATION

Curve Number = 65 S = 5.385 Lag 0.070 hrs

Time of Concentration = 0.117 hrs

Watershed area #6

AREA

Map Area		Actual Area		
41.63	sq. in.	10407500	sq. ft.	238.9 acres

AVERAGE WATERSHED SLOPE

Max. Elev. 8670 Min. Elev. 6800 Difference 1870

	Elevation	Length (in.)	Length (ft.)
0.25	7267.5	9	4500
0.5	7735	9.4	4700
0.75	8202.5	6.5	3250

Ave Watershed Slope= 55.9 %

Hydraulic Length

Map Length	Actual Length
10.8 inches	5400 feet

TIME OF CONCENTRATION

Curve Number = 65 S = 5.385 Lag 0.249 hrs

Time of Concentration = 0.416 hrs

Watershed area #7

AREA

Map Area		Actual Area		
2.18	sq. in.	545000	sq. ft.	12.5 acres

AVERAGE WATERSHED SLOPE

Max. Elev. 7420 Min. Elev. 6800 Difference 620

	Elevation	Length (in.)	Length (ft.)
0.25	6955	1.5	750
0.5	7110	1	500
0.75	7265	0.5	250

Ave Watershed Slope= 42.7 %

Hydraulic Length

Map Length	Actual Length
2.2 inches	1100 feet

TIME OF CONCENTRATION

Curve Number = 65 S = 5.385 Lag 0.080 hrs

Time of Concentration = 0.133 hrs

Watershed area #8

AREA

Map Area		Actual Area	
8.21 sq. in.	2052500 sq. ft.		47.1 acres

AVERAGE WATERSHED SLOPE

Max. Elev. 8400 Min. Elev. 6860 Difference 1540

	Elevation	Length (in.)	Length (ft.)
0.25	7245	2.65	1325
0.5	7630	1.7	850
0.75	8015	0.9	450

Ave Watershed Slope= 49.2 %

Hydraulic Length

Curve Number =

Map Length	Actual Length
7.2 inches	3600 feet

TIME OF CONCENTRATION

Curve Number = 65 S = 5.385 Lag 0.192 hrs

Time of Concentration = 0.320 hrs

Watershed area #9

AREA

Map Area		Actual Area	
0.62 sq. in.	155000 sq. ft.		3.6 acres

AVERAGE WATERSHED SLOPE

Max. Elev. 7200 Min. Elev. 6860 Difference 340

	Elevation	Length (in.)	Length (ft.)
0.25	6945	0.7	350
0.5	7030	0.25	125
0.75	7115	0.1	50

Ave Watershed Slope= 28.8 %

Hydraulic Length

Map Length	Actual Length
1.1 inches	550 feet

TIME OF CONCENTRATION

Curve Number = 65 S = 5.385 Lag 0.056 hrs

Time of Concentration = 0.093 hrs

Watershed area #10,11,12,13,14,15,and 16

AREA

Map Area		Actual Area		
289.14	sq. in.	72285000	sq. ft.	1659.4 acres

AVERAGE WATERSHED SLOPE

Max. Elev. 9480 Min. Elev. 6920 Difference 2560

	Elevation	Length (in.)	Length (ft.)
0.25	7560	43.6	21800
0.5	8200	47.05	23525
0.75	8840	19.15	9575

Ave Watershed Slope= 48.61 %

Hydraulic Length

Map Length	Actual Length
21.7 inches	10850 feet

TIME OF CONCENTRATION

Curve Number = 68 S = 4.706 Lag 0.432 hrs

Time of Concentration = 0.720 hrs

Watershed area #17

AREA

Map Area		Actual Area		
1.35	sq. in.	337500	sq. ft.	7.7 acres

AVERAGE WATERSHED SLOPE

Max. Elev. 7720 Min. Elev. 6860 Difference 860

	Elevation	Length (in.)	Length (ft.)
0.25	7075	0.6	300
0.5	7290	0.4	200
0.75	7505	0.35	175

Ave Watershed Slope= 43.0 %

Hydraulic Length

Map Length	Actual Length
2.4 inches	1200 feet

TIME OF CONCENTRATION

Curve Number = 70 S = 4.286 Lag 0.075 hrs

Time of Concentration = 0.125 hrs

Watershed area #18

AREA

Map Area		Actual Area	
1.26 sq. in.	315000 sq. ft.	7.2 acres	

AVERAGE WATERSHED SLOPE

Max. Elev. 7560 Min. Elev. 6840 Difference 720

	Elevation	Length (in.)	Length (ft.)
0.25	7020	0.6	300
0.5	7200	0.8	400
0.75	7380	0.5	250

Ave Watershed Slope= 54.3 %

Hydraulic Length

Map Length	Actual Length
2 inches	1000 feet

TIME OF CONCENTRATION

Curve Number = 70 S = 4.286 Lag 0.058 hrs

Time of Concentration = 0.096 hrs

Watershed area #19

AREA

Map Area		Actual Area	
21.15 sq. in.	5287500 sq. ft.	121.4 acres	

AVERAGE WATERSHED SLOPE

Max. Elev. 8370 Min. Elev. 6840 Difference 1530

	Elevation	Length (in.)	Length (ft.)
0.25	7222.5	1.15	575
0.5	7605	4.5	2250
0.75	7987.5	3.5	1750

Ave Watershed Slope= 33.1 %

Hydraulic Length

Map Length	Actual Length
9.4 inches	4700 feet

TIME OF CONCENTRATION

Curve Number = 70 S = 4.286 Lag 0.254 hrs

Time of Concentration = 0.424 hrs

Watershed area 20

AREA

Map Area		Actual Area	
2.68 sq. in.	670000 sq. ft.	15.4 acres	

AVERAGE WATERSHED SLOPE

Max. Elev. 7520 Min. Elev. 6780 Difference 740

	Elevation	Length (in.)	Length (ft.)
0.25	6965	1.9	950
0.5	7150	1	500
0.75	7335	0.5	250

Ave Watershed Slope= 46.9 %

Hydraulic Length

Map Length	Actual Length
2.1 inches	1050 feet

TIME OF CONCENTRATION

Curve Number = 70 S = 4.286 Lag 0.064 hrs

Time of Concentration = 0.107 hrs

Watershed area #21

AREA

Map Area		Actual Area	
4.14 sq. in.	1035000 sq. ft.	23.8 acres	

AVERAGE WATERSHED SLOPE

Max. Elev. 7900 Min. Elev. 6760 Difference 1140

	Elevation	Length (in.)	Length (ft.)
0.25	7045	2.1	1050
0.5	7330	1.7	850
0.75	7615	1.35	675

Ave Watershed Slope= 70.9 %

Hydraulic Length

Map Length	Actual Length
4.1 inches	2050 feet

TIME OF CONCENTRATION

Curve Number = 68 S = 4.706 Lag 0.094 hrs

Time of Concentration = 0.157 hrs

Watershed area #22

AREA

Map Area		Actual Area	
1.25 sq. in.	312500 sq. ft.		7.2 acres

AVERAGE WATERSHED SLOPE

Max. Elev. 7320 Min. Elev. 6720 Difference 600

	Elevation	Length (in.)	Length (ft.)
0.25	6870	1	500
0.5	7020	0.9	450
0.75	7170	0.35	175

Ave Watershed Slope= 54.0 %

Hydraulic Length

Map Length	Actual Length
1.5 inches	750 feet

TIME OF CONCENTRATION

Curve Number = 70 S = 4.286 Lag 0.046 hrs

Time of Concentration = 0.076 hrs

Watershed 2 - 22

AREA

Map Area		Actual Area	
390.71 sq. in.	97677500 sq. ft.		2242.4 acres

AVERAGE WATERSHED SLOPE

Max. Elev. 9480 Min. Elev. 6720 Difference 2760

Ave Watershed Slope= 48.92 % weighted average

Hydraulic Length

Map Length	Actual Length
28.5 inches	14250 feet

TIME OF CONCENTRATION

Curve Number = 68 S = 4.706 Lag 0.536 hrs

Time of Concentration = 0.893 hrs

Watershed #23

Area = 18.76 acres

Ave Watershed Slope= 87.10 %

Hydraulic Length = 1800 ft

TIME OF CONCENTRATION

Curve Number =	70	S =	4.286	Lag	0.073 hrs

Time of Concentration = 0.121 hrs

Watershed #24

Area = 2.08 acres

Ave Watershed Slope= 98.20 %

Hydraulic Length = 800 ft

TIME OF CONCENTRATION

Curve Number =	70	S =	4.286	Lag	0.036 hrs

Time of Concentration = 0.060 hrs

Watershed #25

Area = 9.92 acres

Ave Watershed Slope= 94.40 %

Hydraulic Length = 1400 ft

TIME OF CONCENTRATION

Curve Number =	70	S =	4.286	Lag	0.057 hrs

Time of Concentration = 0.095 hrs

Watershed #26

Area = 1.85 acres

Ave Watershed Slope= 91.80 %

Hydraulic Length = 600 ft

TIME OF CONCENTRATION

Curve Number =	70	S =	4.286	Lag	0.029 hrs

Time of Concentration = 0.049 hrs

Watershed #26 & 27

Area = 13.14 acres

Ave Watershed Slope= 80.00 %

Hydraulic Length = 1600 ft

TIME OF CONCENTRATION

Curve Number =	70	S =	4.286	Lag	0.069 hrs

Time of Concentration = 0.115 hrs

Watershed #28

Area = 1.58 acres

Ave Watershed Slope= 61.00 %

Hydraulic Length = 600 ft

TIME OF CONCENTRATION

Curve Number =	70	S =	4.286	Lag	0.036 hrs

Time of Concentration = 0.060 hrs

Watershed #29

Area = 2.31 acres

Ave Watershed Slope= 55.70 %

Hydraulic Length = 600 ft

TIME OF CONCENTRATION

Curve Number =	70	S =	4.286	Lag	0.038 hrs

Time of Concentration = 0.063 hrs

Watershed #29 &30

Area = 43.83 acres

Ave Watershed Slope= 72.00 %

Hydraulic Length = 2450 ft

TIME OF CONCENTRATION

Curve Number =	70	S =	4.286	Lag	0.102 hrs

Time of Concentration = 0.171 hrs

Watershed #31

Area = 2.82 acres

Ave Watershed Slope= 52.90 %

Hydraulic Length = 800 ft

TIME OF CONCENTRATION

Curve Number = 70 S = 4.286 Lag 0.049 hrs

Time of Concentration = 0.081 hrs

Watershed #31 & 32

Area = 28.28 acres

Ave Watershed Slope= 70.90 %

Hydraulic Length = 2250 ft

TIME OF CONCENTRATION

Curve Number = 70 S = 4.286 Lag 0.096 hrs

Time of Concentration = 0.161 hrs

Watershed #33

Area = 2.81 acres

Ave Watershed Slope= 71.90 %

Hydraulic Length = 900 ft

TIME OF CONCENTRATION

Curve Number = 70 S = 4.286 Lag 0.046 hrs

Time of Concentration = 0.077 hrs

Watershed #33 & 34

Area = 10.89 acres

Ave Watershed Slope= 78.80 %

Hydraulic Length = 1300 ft

TIME OF CONCENTRATION

Curve Number = 70 S = 4.286 Lag 0.059 hrs

Time of Concentration = 0.098 hrs

Watershed #35

Area = 9.5 acres

Ave Watershed Slope= 81.70 %

Hydraulic Length = 1300 ft

TIME OF CONCENTRATION

Curve Number = 70 S = 4.286 Lag 0.058 hrs

Time of Concentration = 0.096 hrs

Watershed #36

Area = 5.11 acres

Ave Watershed Slope= 73.70 %

Hydraulic Length = 1050 ft

TIME OF CONCENTRATION

Curve Number = 70 S = 4.286 Lag 0.051 hrs

Time of Concentration = 0.086 hrs

Watershed #37

Area = 5.81 acres

Ave Watershed Slope= 91.70 %

Hydraulic Length = 1000 ft

TIME OF CONCENTRATION

Curve Number = 70 S = 4.286 Lag 0.044 hrs

Time of Concentration = 0.074 hrs

Watershed #38

Area = 9.07 acres

Ave Watershed Slope= 63.30 %

Hydraulic Length = 1400 ft

TIME OF CONCENTRATION

Curve Number = 70 S = 4.286 Lag 0.070 hrs

Time of Concentration = 0.116 hrs

Total Watershed

Area = 2716.49 acres

Ave Watershed Slope= 50.23 % weighted average

Hydraulic Length = 18750 ft

TIME OF CONCENTRATION

Curve Number =	68	S =	4.706	Lag	0.659 hrs

Time of Concentration = 1.098 hrs

EARTHFAX ENGINEERING, INC.
HYDROGRAPH GENERATION PROGRAM OUTPUT
BASED ON SCS CURVE NUMBER METHODOLOGY

INPUT FOR: Crandall canyon watershed #1 (10 yr 6 hr)

STORM :	WATERSHED :
Dist.=SCS Type 'b' - 6 Hr	Area = 316.10 acres
Depth = 1.40 inches	CN = 65.00
Duration = 6.00 hrs	Time conc.= 0.601 hrs

OUTPUT SUMMARY

Runoff depth	0.01829	inches	
Initial abstr	1.07692	inches	
Peak flow =	3.14	cfs	(0.00986 iph)
at time	6.090	hrs	

INPUT FOR: Crandall canyon watershed #2 (10 yr 6 hr)

STORM :	WATERSHED :
Dist.=SCS Type 'b' - 6 Hr	Area = 43.50 acres
Depth = 1.40 inches	CN = 65.00
Duration = 6.00 hrs	Time conc.= 0.256 hrs

OUTPUT SUMMARY

Runoff depth	0.01829	inches	
Initial abstr	1.07692	inches	
Peak flow =	0.45	cfs	(0.01017 iph)
at time	6.042	hrs	

EARTHFAX ENGINEERING, INC.
HYDROGRAPH GENERATION PROGRAM OUTPUT
BASED ON SCS CURVE NUMBER METHODOLOGY

INPUT FOR: Crandall canyon watershed #3 (10 yr 6 hr)

STORM :	WATERSHED :
Dist.=SCS Type 'b' - 6 Hr	Area = 3.50 acres
Depth = 1.40 inches	CN = 65.00
Duration = 6.00 hrs	Time conc.= 0.066 hrs

OUTPUT SUMMARY

Runoff depth	0.01829	inches	
Initial abstr	1.07692	inches	
Peak flow =	0.04	cfs	(0.01063 iph)
at time	6.002	hrs	

INPUT FOR: Crandall canyon watershed #4 (10 yr 6 hr)

STORM :	WATERSHED :
Dist.=SCS Type 'b' - 6 Hr	Area = 47.00 acres
Depth = 1.40 inches	CN = 65.00
Duration = 6.00 hrs	Time conc.= 0.265 hrs

OUTPUT SUMMARY

Runoff depth	0.01829	inches	
Initial abstr	1.07692	inches	
Peak flow =	0.48	cfs	(0.01016 iph)
at time	6.042	hrs	

EARTHFAX ENGINEERING, INC.
HYDROGRAPH GENERATION PROGRAM OUTPUT
BASED ON SCS CURVE NUMBER METHODOLOGY

INPUT FOR: Crandall canyon watershed #5 (10 yr 6 hr)

STORM :	WATERSHED :
Dist.=SCS Type 'b' - 6 Hr	Area = 4.10 acres
Depth = 1.40 inches	CN = 65.00
Duration = 6.00 hrs	Time conc.= 0.117 hrs

OUTPUT SUMMARY

Runoff depth	0.01829	inches	
Initial abstr	1.07692	inches	
Peak flow =	0.04	cfs	(0.01051 iph)
at time	6.006	hrs	

INPUT FOR: Crandall canyon watershed #6 (10 yr 6 hr)

STORM :	WATERSHED :
Dist.=SCS Type 'b' - 6 Hr	Area = 238.90 acres
Depth = 1.40 inches	CN = 65.00
Duration = 6.00 hrs	Time conc.= 0.416 hrs

OUTPUT SUMMARY

Runoff depth	0.01829	inches	
Initial abstr	1.07692	inches	
Peak flow =	2.41	cfs	(0.01001 iph)
at time	6.046	hrs	

EARTHFAX ENGINEERING, INC.
HYDROGRAPH GENERATION PROGRAM OUTPUT
BASED ON SCS CURVE NUMBER METHODOLOGY

INPUT FOR: Crandall canyon watershed #7 (10 yr 6 hr)

STORM :	WATERSHED :
Dist.=SCS Type 'b' - 6 Hr	Area = 12.50 acres
Depth = 1.40 inches	CN = 65.00
Duration = 6.00 hrs	Time conc.= 0.133 hrs

OUTPUT SUMMARY

Runoff depth	0.01829	inches	
Initial abstr	1.07692	inches	
Peak flow =	0.13	cfs	(0.01048 iph)
at time	6.012	hrs	

INPUT FOR: Crandall canyon watershed #8 (10 yr 6 hr)

STORM :	WATERSHED :
Dist.=SCS Type 'b' - 6 Hr	Area = 47.10 acres
Depth = 1.40 inches	CN = 65.00
Duration = 6.00 hrs	Time conc.= 0.320 hrs

OUTPUT SUMMARY

Runoff depth	0.01829	inches	
Initial abstr	1.07692	inches	
Peak flow =	0.48	cfs	(0.01003 iph)
at time	6.016	hrs	

EARTHFAX ENGINEERING, INC.
HYDROGRAPH GENERATION PROGRAM OUTPUT
BASED ON SCS CURVE NUMBER METHODOLOGY

INPUT FOR: Crandall canyon watershed #9 (10 yr 6 hr)

STORM :	WATERSHED :
Dist.=SCS Type 'b' - 6 Hr	Area = 3.60 acres
Depth = 1.40 inches	CN = 65.00
Duration = 6.00 hrs	Time conc.= 0.093 hrs

OUTPUT SUMMARY

Runoff depth	0.01829	inches		
Initial abstr	1.07692	inches		
Peak flow =	0.04	cfs	(0.01056	iph)
at time	6.002	hrs		

INPUT FOR: Crandall canyon watersheds #10 - 16 (100 yr 6 hr)

STORM :	WATERSHED :
Dist.=SCS Type 'b' - 6 Hr	Area = 1659.40 acres
Depth = 2.00 inches	CN = 68.00
Duration = 6.00 hrs	Time conc.= 0.720 hrs

OUTPUT SUMMARY

Runoff depth	0.19448	inches		
Initial abstr	0.94118	inches		
Peak flow =	100.78	cfs	(0.06023	iph)
at time	3.648	hrs		

EARTHFAX ENGINEERING, INC.
HYDROGRAPH GENERATION PROGRAM OUTPUT
BASED ON SCS CURVE NUMBER METHODOLOGY

INPUT FOR: Crandall canyon watershed area #11 (10 yr 6 hr)

STORM :	WATERSHED :
Dist.=SCS Type 'b' - 6 Hr	Area = 24.22 acres
Depth = 1.40 inches	CN = 70.00
Duration = 6.00 hrs	Time conc.= 0.204 hrs

OUTPUT SUMMARY

Runoff depth	0.06103	inches	
Initial abstr	0.85714	inches	
Peak flow =	0.52	cfs	(0.02137 iph)
at time	5.549	hrs	

INPUT FOR: Crandall canyon watershed area #12 (10 yr 6 hr)

STORM :	WATERSHED :
Dist.=SCS Type 'b' - 6 Hr	Area = 229.57 acres
Depth = 1.40 inches	CN = 70.00
Duration = 6.00 hrs	Time conc.= 0.387 hrs

OUTPUT SUMMARY

Runoff depth	0.06103	inches	
Initial abstr	0.85714	inches	
Peak flow =	4.84	cfs	(0.02093 iph)
at time	5.676	hrs	

EARTHFAX ENGINEERING, INC.
HYDROGRAPH GENERATION PROGRAM OUTPUT
BASED ON SCS CURVE NUMBER METHODOLOGY

INPUT FOR: Crandall canyon watershed area #14 (10 yr 6 hr)

STORM :	WATERSHED :
Dist.=SCS Type 'b' - 6 Hr	Area = 26.17 acres
Depth = 1.40 inches	CN = 70.00
Duration = 6.00 hrs	Time conc.= 0.159 hrs

OUTPUT SUMMARY

Runoff depth	0.06103	inches	
Initial abstr	0.85714	inches	
Peak flow =	0.57	cfs	(0.02149 iph)
at time	5.533	hrs	

INPUT FOR: Crandall canyon watershed area #16 (10 yr 6 hr)

STORM :	WATERSHED :
Dist.=SCS Type 'b' - 6 Hr	Area = 11.13 acres
Depth = 1.40 inches	CN = 70.00
Duration = 6.00 hrs	Time conc.= 0.111 hrs

OUTPUT SUMMARY

Runoff depth	0.06103	inches	
Initial abstr	0.85714	inches	
Peak flow =	0.24	cfs	(0.02163 iph)
at time	5.520	hrs	

EARTHFAX ENGINEERING, INC.
HYDROGRAPH GENERATION PROGRAM OUTPUT
BASED ON SCS CURVE NUMBER METHODOLOGY

INPUT FOR: Crandall canyon watershed #17 (10 yr 6 hr)

STORM :	WATERSHED :
Dist.=SCS Type 'b' - 6 Hr	Area = 7.70 acres
Depth = 1.40 inches	CN = 70.00
Duration = 6.00 hrs	Time conc.= 0.125 hrs

OUTPUT SUMMARY

Runoff depth	0.06103	inches	
Initial abstr	0.85714	inches	
Peak flow =	0.17	cfs	(0.02159 iph)
at time	5.517	hrs	

INPUT FOR: Crandall canyon watershed #18 (10 yr 6 hr)

STORM :	WATERSHED :
Dist.=SCS Type 'b' - 6 Hr	Area = 7.20 acres
Depth = 1.40 inches	CN = 70.00
Duration = 6.00 hrs	Time conc.= 0.096 hrs

OUTPUT SUMMARY

Runoff depth	0.06103	inches	
Initial abstr	0.85714	inches	
Peak flow =	0.16	cfs	(0.02168 iph)
at time	5.517	hrs	

EARTHFAX ENGINEERING, INC.
HYDROGRAPH GENERATION PROGRAM OUTPUT
BASED ON SCS CURVE NUMBER METHODOLOGY

INPUT FOR: Crandall canyon watershed #19 (10 yr 6 hr)

STORM :	WATERSHED :
Dist.=SCS Type 'b' - 6 Hr	Area = 121.40 acres
Depth = 1.40 inches	CN = 70.00
Duration = 6.00 hrs	Time conc.= 0.424 hrs

OUTPUT SUMMARY

Runoff depth	0.06103	inches	
Initial abstr	0.85714	inches	
Peak flow =	2.55	cfs	(0.02086 iph)
at time	5.710	hrs	

INPUT FOR: Crandall canyon watershed #20 (10 yr 6 hr)

STORM :	WATERSHED :
Dist.=SCS Type 'b' - 6 Hr	Area = 15.40 acres
Depth = 1.40 inches	CN = 70.00
Duration = 6.00 hrs	Time conc.= 0.107 hrs

OUTPUT SUMMARY

Runoff depth	0.06103	inches	
Initial abstr	0.85714	inches	
Peak flow =	0.34	cfs	(0.02164 iph)
at time	5.521	hrs	

EARTHFAX ENGINEERING, INC.
HYDROGRAPH GENERATION PROGRAM OUTPUT
BASED ON SCS CURVE NUMBER METHODOLOGY

INPUT FOR: Crandall canyon watershed #21 (10 yr 6 hr)

STORM :	WATERSHED :
Dist.=SCS Type 'b' - 6 Hr	Area = 23.80 acres
Depth = 1.40 inches	CN = 68.00
Duration = 6.00 hrs	Time conc.= 0.157 hrs

OUTPUT SUMMARY

Runoff depth	0.04076	inches		
Initial abstr	0.94118	inches		
Peak flow =	0.40	cfs	(0.01678	iph)
at time	5.547	hrs		

INPUT FOR: Crandall canyon watershed #22 (10 yr 6 hr)

STORM :	WATERSHED :
Dist.=SCS Type 'b' - 6 Hr	Area = 7.20 acres
Depth = 1.40 inches	CN = 70.00
Duration = 6.00 hrs	Time conc.= 0.076 hrs

OUTPUT SUMMARY

Runoff depth	0.06103	inches		
Initial abstr	0.85714	inches		
Peak flow =	0.16	cfs	(0.02174	iph)
at time	5.513	hrs		

EARTHFAX ENGINEERING, INC.
HYDROGRAPH GENERATION PROGRAM OUTPUT
BASED ON SCS CURVE NUMBER METHODOLOGY

INPUT FOR: Crandall canyon watersheds #2 - 22 (100 yr 6 hr)

STORM :	WATERSHED :
Dist.=SCS Type 'b' - 6 Hr	Area = 2242.40 acres
Depth = 2.00 inches	CN = 68.00
Duration = 6.00 hrs	Time conc.= 0.893 hrs

OUTPUT SUMMARY

Runoff depth	0.19448	inches	
Initial abstr	0.94118	inches	
Peak flow =	134.75	cfs	(0.05959 iph)
at time	3.929	hrs	

INPUT FOR: Crandall canyon watershed #23 (10 yr 6 hr)

STORM :	WATERSHED :
Dist.=SCS Type 'b' - 6 Hr	Area = 18.76 acres
Depth = 1.40 inches	CN = 70.00
Duration = 6.00 hrs	Time conc.= 0.121 hrs

OUTPUT SUMMARY

Runoff depth	0.06103	inches	
Initial abstr	0.85714	inches	
Peak flow =	0.41	cfs	(0.02161 iph)
at time	5.518	hrs	

EARTHFAX ENGINEERING, INC.
HYDROGRAPH GENERATION PROGRAM OUTPUT
BASED ON SCS CURVE NUMBER METHODOLOGY

INPUT FOR: Crandall canyon watershed #24 (10 yr 6 hr)

STORM :	WATERSHED :
Dist.=SCS Type 'b' - 6 Hr	Area = 2.08 acres
Depth = 1.40 inches	CN = 70.00
Duration = 6.00 hrs	Time conc.= 0.060 hrs

OUTPUT SUMMARY

Runoff depth	0.06103	inches		
Initial abstr	0.85714	inches		
Peak flow =	0.05	cfs	(0.02179	iph)
at time	3.512	hrs		

INPUT FOR: Crandall canyon watershed #25 (10 yr 6 hr)

STORM :	WATERSHED :
Dist.=SCS Type 'b' - 6 Hr	Area = 9.92 acres
Depth = 1.40 inches	CN = 70.00
Duration = 6.00 hrs	Time conc.= 0.095 hrs

OUTPUT SUMMARY

Runoff depth	0.06103	inches		
Initial abstr	0.85714	inches		
Peak flow =	0.22	cfs	(0.02168	iph)
at time	5.510	hrs		

EARTHFAX ENGINEERING, INC.
HYDROGRAPH GENERATION PROGRAM OUTPUT
BASED ON SCS CURVE NUMBER METHODOLOGY

INPUT FOR: Crandall canyon watershed #26 (10 yr 6 hr)

STORM :	WATERSHED :
Dist.=SCS Type 'b' - 6 Hr	Area = 1.85 acres
Depth = 1.40 inches	CN = 70.00
Duration = 6.00 hrs	Time conc.= 0.049 hrs

OUTPUT SUMMARY

Runoff depth	0.06103	inches		
Initial abstr	0.85714	inches		
Peak flow =	0.04	cfs	(0.02196	iph)
at time	3.508	hrs		

INPUT FOR: Crandall canyon watersheds #26 & 27 (10 yr 6 hr)

STORM :	WATERSHED :
Dist.=SCS Type 'b' - 6 Hr	Area = 13.14 acres
Depth = 1.40 inches	CN = 70.00
Duration = 6.00 hrs	Time conc.= 0.115 hrs

OUTPUT SUMMARY

Runoff depth	0.06103	inches		
Initial abstr	0.85714	inches		
Peak flow =	0.29	cfs	(0.02162	iph)
at time	5.520	hrs		

EARTHFAX ENGINEERING, INC.
HYDROGRAPH GENERATION PROGRAM OUTPUT
BASED ON SCS CURVE NUMBER METHODOLOGY

INPUT FOR: Crandall canyon watershed #28 (10 yr 6 hr)

STORM :	WATERSHED :
Dist.=SCS Type 'b' - 6 Hr	Area = 1.58 acres
Depth = 1.40 inches	CN = 70.00
Duration = 6.00 hrs	Time conc.= 0.060 hrs

OUTPUT SUMMARY

Runoff depth	0.06103	inches		
Initial abstr	0.85714	inches		
Peak flow =	0.03	cfs	(0.02179	iph)
at time	3.512	hrs		

INPUT FOR: Crandall canyon watershed #29 (10 yr 6 hr)

STORM :	WATERSHED :
Dist.=SCS Type 'b' - 6 Hr	Area = 2.31 acres
Depth = 1.40 inches	CN = 70.00
Duration = 6.00 hrs	Time conc.= 0.063 hrs

OUTPUT SUMMARY

Runoff depth	0.06103	inches		
Initial abstr	0.85714	inches		
Peak flow =	0.05	cfs	(0.02178	iph)
at time	5.510	hrs		

EARTHFAX ENGINEERING, INC.
HYDROGRAPH GENERATION PROGRAM OUTPUT
BASED ON SCS CURVE NUMBER METHODOLOGY

INPUT FOR: Crandall canyon watersheds #29 & 30 (10 yr 6 hr)

STORM :	WATERSHED :
Dist.=SCS Type 'b' - 6 Hr	Area = 43.83 acres
Depth = 1.40 inches	CN = 70.00
Duration = 6.00 hrs	Time conc.= 0.171 hrs

OUTPUT SUMMARY

Runoff depth	0.06103	inches	
Initial abstr	0.85714	inches	
Peak flow =	0.95	cfs	(0.02146 iph)
at time	5.540	hrs	

INPUT FOR: Crandall canyon watershed #31 (10 yr 6 hr)

STORM :	WATERSHED :
Dist.=SCS Type 'b' - 6 Hr	Area = 2.82 acres
Depth = 1.40 inches	CN = 70.00
Duration = 6.00 hrs	Time conc.= 0.081 hrs

OUTPUT SUMMARY

Runoff depth	0.06103	inches	
Initial abstr	0.85714	inches	
Peak flow =	0.06	cfs	(0.02172 iph)
at time	5.508	hrs	

EARTHFAX ENGINEERING, INC.
HYDROGRAPH GENERATION PROGRAM OUTPUT
BASED ON SCS CURVE NUMBER METHODOLOGY

INPUT FOR: Crandall canyon watersheds #31 & 32 (10 yr 6 hr)

STORM :	WATERSHED :
Dist.=SCS Type 'b' - 6 Hr	Area = 28.28 acres
Depth = 1.40 inches	CN = 70.00
Duration = 6.00 hrs	Time conc.= 0.161 hrs

OUTPUT SUMMARY

Runoff depth	0.06103	inches		
Initial abstr	0.85714	inches		
Peak flow =	0.61	cfs	(0.02149	iph)
at time	5.538	hrs		

INPUT FOR: Crandall canyon watershed #33 (10 yr 6 hr)

STORM :	WATERSHED :
Dist.=SCS Type 'b' - 6 Hr	Area = 2.81 acres
Depth = 1.40 inches	CN = 70.00
Duration = 6.00 hrs	Time conc.= 0.077 hrs

OUTPUT SUMMARY

Runoff depth	0.06103	inches		
Initial abstr	0.85714	inches		
Peak flow =	0.06	cfs	(0.02174	iph)
at time	5.513	hrs		

EARTHFAX ENGINEERING, INC.
HYDROGRAPH GENERATION PROGRAM OUTPUT
BASED ON SCS CURVE NUMBER METHODOLOGY

INPUT FOR: Crandall canyon watersheds #33 & 34 (10 yr 6 hr)

STORM :	WATERSHED :
Dist.=SCS Type 'b' - 6 Hr	Area = 10.89 acres
Depth = 1.40 inches	CN = 70.00
Duration = 6.00 hrs	Time conc.= 0.098 hrs

OUTPUT SUMMARY

Runoff depth	0.06103	inches	
Initial abstr	0.85714	inches	
Peak flow =	0.24	cfs	(0.02168 iph)
at time	5.514	hrs	

INPUT FOR: Crandall canyon watershed #35 (10 yr 6 hr)

STORM :	WATERSHED :
Dist.=SCS Type 'b' - 6 Hr	Area = 9.50 acres
Depth = 1.40 inches	CN = 70.00
Duration = 6.00 hrs	Time conc.= 0.096 hrs

OUTPUT SUMMARY

Runoff depth	0.06103	inches	
Initial abstr	0.85714	inches	
Peak flow =	0.21	cfs	(0.02168 iph)
at time	5.517	hrs	

EARTHFAX ENGINEERING, INC.
HYDROGRAPH GENERATION PROGRAM OUTPUT
BASED ON SCS CURVE NUMBER METHODOLOGY

INPUT FOR: Crandall canyon watershed # 36 (10 yr 6 hr)

STORM :	WATERSHED :
Dist.=SCS Type 'b' - 6 Hr	Area = 5.11 acres
Depth = 1.40 inches	CN = 70.00
Duration = 6.00 hrs	Time conc.= 0.086 hrs

OUTPUT SUMMARY

Runoff depth	0.06103	inches	
Initial abstr	0.85714	inches	
Peak flow =	0.11	cfs	(0.02171 iph)
at time	5.515	hrs	

INPUT FOR: Crandall canyon watershed #37 (10 yr 6 hr)

STORM :	WATERSHED :
Dist.=SCS Type 'b' - 6 Hr	Area = 5.81 acres
Depth = 1.40 inches	CN = 70.00
Duration = 6.00 hrs	Time conc.= 0.074 hrs

OUTPUT SUMMARY

Runoff depth	0.06103	inches	
Initial abstr	0.85714	inches	
Peak flow =	0.13	cfs	(0.02174 iph)
at time	5.506	hrs	

EARTHFAX ENGINEERING, INC.
HYDROGRAPH GENERATION PROGRAM OUTPUT
BASED ON SCS CURVE NUMBER METHODOLOGY

INPUT FOR: Crandall canyon watershed #38 (10 yr 6 hr)

STORM :	WATERSHED :
Dist.=SCS Type 'b' - 6 Hr	Area = 9.07 acres
Depth = 1.40 inches	CN = 70.00
Duration = 6.00 hrs	Time conc.= 0.116 hrs

OUTPUT SUMMARY

Runoff depth	0.06103	inches		
Initial abstr	0.85714	inches		
Peak flow =	0.20	cfs	(0.02162	iph)
at time	5.522	hrs		

INPUT FOR: Crandall canyon total watershed (100 yr 6 hr)

STORM :	WATERSHED :
Dist.=SCS Type 'b' - 6 Hr	Area = 2716.49 acres
Depth = 2.00 inches	CN = 68.00
Duration = 6.00 hrs	Time conc.= 1.098 hrs

OUTPUT SUMMARY

Runoff depth	0.19448	inches		
Initial abstr	0.94118	inches		
Peak flow =	159.42	cfs	(0.05820	iph)
at time	4.246	hrs		

APPENDIX 3.7P

RECLAMATION HYDROLOGY DRAINAGE DIVERSION CALCULATIONS FOR CRANDALL CANYON

REGISTERED PROFESSIONAL ENGINEER
No. 7102
RICHARD B. WHITE
9/15/95
STATE OF UTAH

EARTHFAX ENGINEERING, INC.
ENGINEERS / SCIENTISTS

PROJECT UC-412 PAGE ____ OF ____
COMPUTED LOJ DATE Aug. 28
CHECKED ____ DATE ____

Main Channel Design

Channel Section	Vert dist (ft)	Hor. dist (ft)	ave slope (%)	flowrate (cfs)
35+80 - 34+70	10	110	9.1	100.78
34+70 - 33+40	10	130	7.7	105.00
33+40 - 31+90	10	150	6.7	110.00
31+90 - 22+00	50	990	5.1	120.00
22+00 - 16+80	20	520	3.8	122.00
16+80 - 14+60	10	220	4.5	128.00
14+60 - 9+10	30	550	5.5	129.00
9+10 - 7+20	10	190	5.3	130.00
7+20 - 5+85	10	135	7.4	131.00
5+85 - 3+50	20	235	8.5	132.00
3+50 - 2+00	10	150	6.7	133.00
2+00 - 0+00	10	200	5.0	134.75

The flowrate for each section has been determined by looking at the watershed area and based on the area draining to the creek above a certain elevation estimating the flowrate. A linear scale will not work since by the time the 67+00 STATION is reached (about 60% down the disturbed portion of the stream) about 85% of the watershed area has drained into the creek. For the 100 yr - 6 hr storm I have flowrate data only at the ~~top~~ bottom of the disturbed area.

Main Channel Design

The main channel to be reconstructed will be a riprapped channel with a bottom width of 8 ft a depth of at least 2 ft and side slopes of 3H:1V. A filter blanket will not be designed at this time because the soil gradation in the creek will not be known until reclamation has progressed to the point that the channels are roughed in.

The riprap design for the various sections is as follows.

Channel elevation	Section location	Velocity (fps)	Riprap D_{50}	Velocity Protection*
6920-6910	35+80 - 34+70	9.3	1.0	11.3
6910-6900	34+70 - 33+40	9.2	0.75	10.0
6900-6890	33+40 - 31+90	8.9	0.75	10.0
6890-6840	31+90 - 22+00	8.3	0.75	10.0
6840-6820	22+00 - 16+80	7.9	0.5	8.0
6820-6810	16+80 - 14+60	8.1	0.75	10.0
6810-6790	14+60 - 9+10	8.7	0.75	10.0
6790-6770	9+10 - 7+20	8.6	0.75	10.0
6770-6760	7+20 - 5+85	9.4	1.0	11.3
6760-6740	5+85 - 3+50	9.9	1.0	11.3
6740-6730	3+50 - 2+00	9.4	0.75	10.0
6730-6720	2+00 - 0+00	8.5	0.75	10.0

*The above riprap sizes were determined using the figure on the following page.

The Manning coefficient was varied according to the equation

$$n = 0.0395\, D_{50}^{1/6}$$

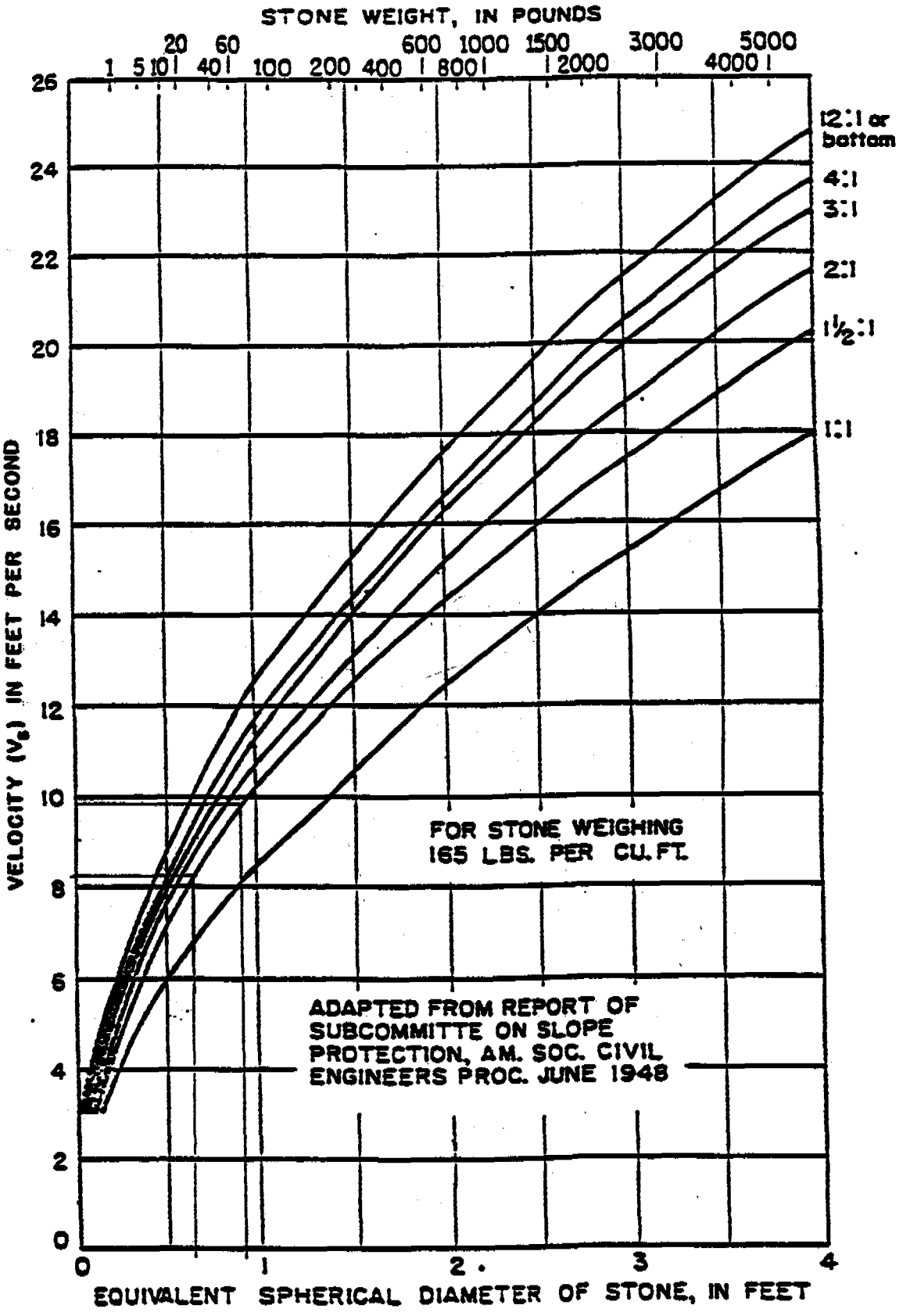

FIG. 2-SIZE OF STONE THAT WILL RESIST DISPLACEMENT FOR VARIOUS VELOCITIES AND SIDE SLOPES

Source: HEC-11

Trapezoidal Channel Analysis & Design
Open Channel - Uniform flow

Worksheet Name: Sta. 34+70

Comment: Sta. 34+70 - 35+80

Solve For Depth

Given Input Data:

Bottom Width.....	8.00 ft
Left Side Slope..	3.00:1 (H:V)
Right Side Slope.	3.00:1 (H:V)
Manning's n.....	0.040
Channel Slope....	0.0910 ft/ft
Discharge.....	100.78 cfs

Computed Results:

Depth.....	0.99 ft
Velocity.....	9.33 fps
Flow Area.....	10.81 sf
Flow Top Width...	13.92 ft
Wetted Perimeter.	14.24 ft
Critical Depth...	1.41 ft
Critical Slope...	0.0238 ft/ft
Froude Number....	1.86 (flow is Supercritical)

Trapezoidal Channel Analysis & Design
Open Channel - Uniform flow

Worksheet Name: Sta. 33+40

Comment: Sta. 33+40 - 34+70

Solve For Depth

Given Input Data:

Bottom Width.....	8.00 ft
Left Side Slope..	3.00:1 (H:V)
Right Side Slope.	3.00:1 (H:V)
Manning's n.....	0.038
Channel Slope....	0.0770 ft/ft
Discharge.....	105.00 cfs

Computed Results:

Depth.....	1.03 ft
Velocity.....	9.23 fps
Flow Area.....	11.37 sf
Flow Top Width...	14.16 ft
Wetted Perimeter.	14.49 ft
Critical Depth...	1.45 ft
Critical Slope...	0.0214 ft/ft
Froude Number....	1.82 (flow is Supercritical)

Open Channel Flow Module, Version 3.16 (c) 1990
Haestad Methods, Inc. * 37 Brookside Rd * Waterbury, Ct 06708

Trapezoidal Channel Analysis & Design
Open Channel - Uniform flow

Worksheet Name: Sta. 31+90

Comment: Sta. 31+90 - 33+40

Solve For Depth

Given Input Data:

Bottom Width.....	8.00 ft
Left Side Slope..	3.00:1 (H:V)
Right Side Slope.	3.00:1 (H:V)
Manning's n.....	0.038
Channel Slope....	0.0670 ft/ft
Discharge.....	110.00 cfs

Computed Results:

Depth.....	1.09 ft
Velocity.....	8.92 fps
Flow Area.....	12.33 sf
Flow Top Width...	14.56 ft
Wetted Perimeter.	14.92 ft
Critical Depth...	1.49 ft
Critical Slope...	0.0212 ft/ft
Froude Number....	1.71 (flow is Supercritical)

Trapezoidal Channel Analysis & Design
Open Channel - Uniform flow

Worksheet Name: Sta. 22+00

Comment: Sta. 22+00 - 31+90

Solve For Depth

Given Input Data:

Bottom Width.....	8.00 ft
Left Side Slope..	3.00:1 (H:V)
Right Side Slope.	3.00:1 (H:V)
Manning's n.....	0.038
Channel Slope....	0.0510 ft/ft
Discharge.....	120.00 cfs

Computed Results:

Depth.....	1.23 ft
Velocity.....	8.31 fps
Flow Area.....	14.43 sf
Flow Top Width...	15.40 ft
Wetted Perimeter.	15.80 ft
Critical Depth...	1.56 ft
Critical Slope...	0.0209 ft/ft
Froude Number....	1.51 (flow is Supercritical)

Open Channel Flow Module, Version 3.16 (c) 1990
Haestad Methods, Inc. * 37 Brookside Rd * Waterbury, Ct 06708

Trapezoidal Channel Analysis & Design
Open Channel - Uniform flow

Worksheet Name: Sta. 16+80

Comment: Sta. 16+80 - 22+00

Solve For Depth

Given Input Data:

Bottom Width.....	8.00 ft
Left Side Slope..	3.00:1 (H:V)
Right Side Slope.	3.00:1 (H:V)
Manning's n.....	0.035
Channel Slope....	0.0380 ft/ft
Discharge.....	122.00 cfs

Computed Results:

Depth.....	1.29 ft
Velocity.....	7.98 fps
Flow Area.....	15.29 sf
Flow Top Width...	15.73 ft
Wetted Perimeter.	16.15 ft
Critical Depth...	1.58 ft
Critical Slope...	0.0177 ft/ft
Froude Number....	1.43 (flow is Supercritical)

Trapezoidal Channel Analysis & Design
Open Channel - Uniform flow

Worksheet Name: Sta. 14+60

Comment: Sta. 14+60 - 16+80

Solve For Depth

Given Input Data:

Bottom Width.....	8.00 ft
Left Side Slope..	3.00:1 (H:V)
Right Side Slope.	3.00:1 (H:V)
Manning's n.....	0.038
Channel Slope....	0.0450 ft/ft
Discharge.....	128.00 cfs

Computed Results:

Depth.....	1.32 ft
Velocity.....	8.11 fps
Flow Area.....	15.79 sf
Flow Top Width...	15.92 ft
Wetted Perimeter.	16.35 ft
Critical Depth...	1.62 ft
Critical Slope...	0.0207 ft/ft
Froude Number....	1.43 (flow is Supercritical)

Trapezoidal Channel Analysis & Design
Open Channel - Uniform flow

Worksheet Name: Sta. 9+10

Comment: Sta. 9+10 - 14+60

Solve For Depth

Given Input Data:

Bottom Width.....	8.00 ft
Left Side Slope..	3.00:1 (H:V)
Right Side Slope.	3.00:1 (H:V)
Manning's n.....	0.038
Channel Slope....	0.0550 ft/ft
Discharge.....	129.00 cfs

Computed Results:

Depth.....	1.26 ft
Velocity.....	8.72 fps
Flow Area.....	14.79 sf
Flow Top Width...	15.54 ft
Wetted Perimeter.	15.95 ft
Critical Depth...	1.63 ft
Critical Slope...	0.0207 ft/ft
Froude Number....	1.58 (flow is Supercritical)

Open Channel Flow Module, Version 3.16 (c) 1990
Haestad Methods, Inc. * 37 Brookside Rd * Waterbury, Ct 06708

Trapezoidal Channel Analysis & Design
Open Channel - Uniform flow

Worksheet Name: Sta. 7+20

Comment: Sta. 7+20 - 9+10

Solve For Depth

Given Input Data:

Bottom Width.....	8.00 ft
Left Side Slope..	3.00:1 (H:V)
Right Side Slope.	3.00:1 (H:V)
Manning's n.....	0.038
Channel Slope....	0.0530 ft/ft
Discharge.....	130.00 cfs

Computed Results:

Depth.....	1.27 ft
Velocity.....	8.63 fps
Flow Area.....	15.07 sf
Flow Top Width...	15.65 ft
Wetted Perimeter.	16.06 ft
Critical Depth...	1.63 ft
Critical Slope...	0.0207 ft/ft
Froude Number....	1.55 (flow is Supercritical)

Trapezoidal Channel Analysis & Design
Open Channel - Uniform flow

Worksheet Name: Sta. 5+85

Comment: Sta. 5+85 - 7+20

Solve For Depth

Given Input Data:

Bottom Width.....	8.00 ft
Left Side Slope..	3.00:1 (H:V)
Right Side Slope.	3.00:1 (H:V)
Manning's n.....	0.040
Channel Slope....	0.0740 ft/ft
Discharge.....	131.00 cfs

Computed Results:

Depth.....	1.20 ft
Velocity.....	9.38 fps
Flow Area.....	13.96 sf
Flow Top Width...	15.22 ft
Wetted Perimeter.	15.61 ft
Critical Depth...	1.64 ft
Critical Slope...	0.0229 ft/ft
Froude Number....	1.73 (flow is Supercritical)

Open Channel Flow Module, Version 3.16 (c) 1990
Haestad Methods, Inc. * 37 Brookside Rd * Waterbury, Ct 06708

Trapezoidal Channel Analysis & Design
Open Channel - Uniform flow

Worksheet Name: Sta. 3+50

Comment: Sta. 3+50 - 5+85

Solve For Depth

Given Input Data:

Bottom Width.....	8.00 ft
Left Side Slope..	3.00:1 (H:V)
Right Side Slope.	3.00:1 (H:V)
Manning's n.....	0.040
Channel Slope....	0.0850 ft/ft
Discharge.....	132.00 cfs

Computed Results:

Depth.....	1.16 ft
Velocity.....	9.87 fps
Flow Area.....	13.37 sf
Flow Top Width...	14.98 ft
Wetted Perimeter.	15.36 ft
Critical Depth...	1.65 ft
Critical Slope...	0.0229 ft/ft
Froude Number....	1.84 (flow is Supercritical)

Open Channel Flow Module, Version 3.16 (c) 1990
Haestad Methods, Inc. * 37 Brookside Rd * Waterbury, Ct 06708

Trapezoidal Channel Analysis & Design
Open Channel - Uniform flow

Worksheet Name: Sta. 2+00

Comment: Sta. 2+00 - 3+50

Solve For Depth

Given Input Data:

Bottom Width.....	8.00 ft
Left Side Slope..	3.00:1 (H:V)
Right Side Slope.	3.00:1 (H:V)
Manning's n.....	0.038
Channel Slope....	0.0670 ft/ft
Discharge.....	133.00 cfs

Computed Results:

Depth.....	1.21 ft
Velocity.....	9.44 fps
Flow Area.....	14.10 sf
Flow Top Width...	15.27 ft
Wetted Perimeter.	15.66 ft
Critical Depth...	1.65 ft
Critical Slope...	0.0206 ft/ft
Froude Number....	1.73 (flow is Supercritical)

Trapezoidal Channel Analysis & Design
Open Channel - Uniform flow

Worksheet Name: Sta. 0+00

Comment: Sta. 0+00 - 2+00

Solve For Depth

Given Input Data:

Bottom Width.....	8.00 ft
Left Side Slope..	3.00:1 (H:V)
Right Side Slope.	3.00:1 (H:V)
Manning's n.....	0.038
Channel Slope....	0.0500 ft/ft
Discharge.....	134.75 cfs

Computed Results:

Depth.....	1.32 ft
Velocity.....	8.54 fps
Flow Area.....	15.78 sf
Flow Top Width...	15.92 ft
Wetted Perimeter.	16.34 ft
Critical Depth...	1.67 ft
Critical Slope...	0.0206 ft/ft
Froude Number....	1.51 (flow is Supercritical)

EARTHFAX ENGINEERING, INC.
ENGINEERS / SCIENTISTS

PROJECT C-412 PAGE ____ OF ____
COMPUTED LOJ DATE Aug 29 1995
CHECKED ____ DATE ____

Typical Cross sections of the main channel for various rip rap sizes

6" rip rap

22+00 – 16+80

total Distance = 520'

Approx Area = 24 ft²

Volume of 6" rip rap = (24 ft²)(520 ft) = 12480 ft³

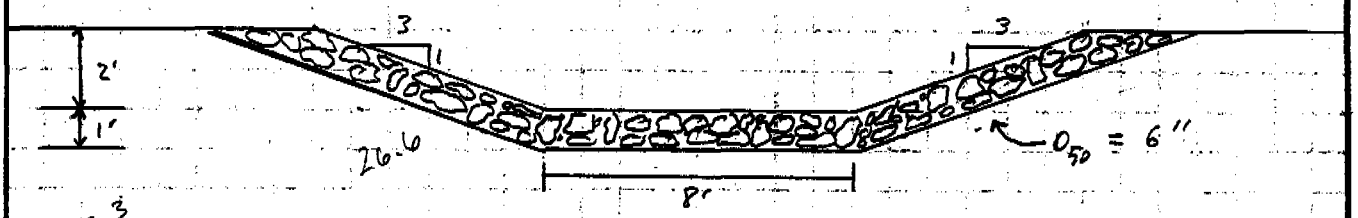

23.3
29.97

Main Channel between 22+00 + 16+80
Scale 1" : 5'

9" rip rap

34+70 – 22+00
16+80 – 7+20
3+50 – 0+00

Total distance = 2580'

Approx Area = 38 ft²

Volume of 9" rip rap = (38 ft²)(2580 ft) = 98040 ft³

37.48
33.29

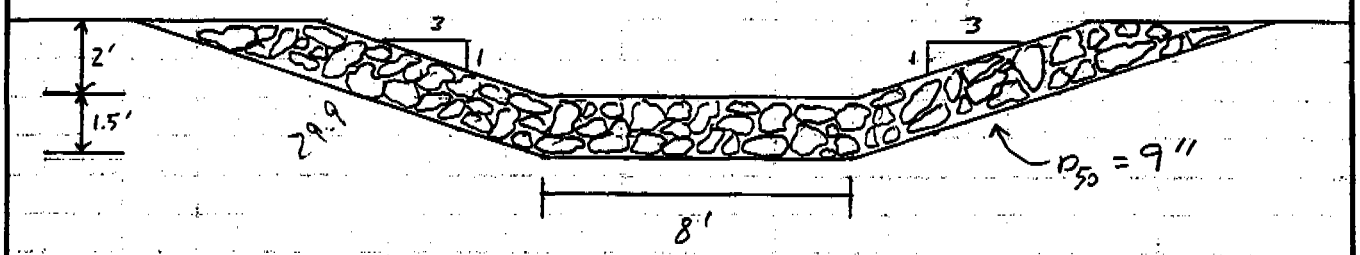

Main Channel on above mentioned areas
Scale 1" : 5'

12" Rip Rap

35+80 - 34+70
7+20 - 3+50

Total Distance = 480

Approx Area = 54 ft²

53.3
30.0

Volume of 12" Rip Rap = (54 ft²)(480 ft) = 25,920 ft³

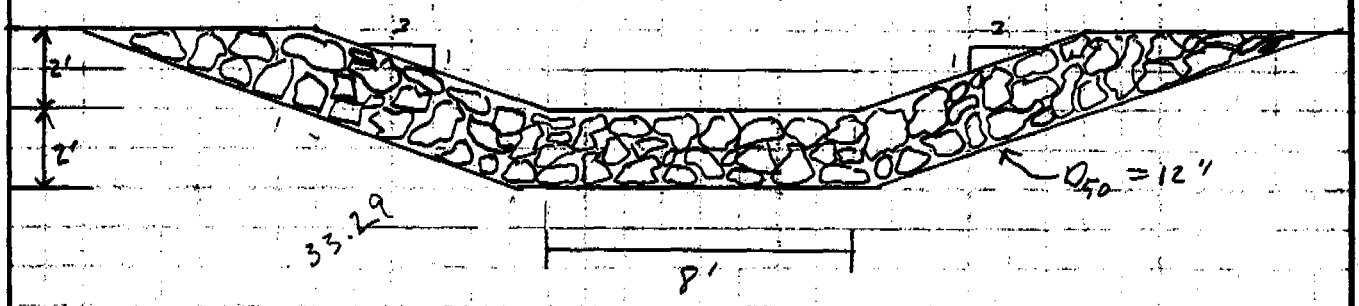

Main channel in area mentioned above
Scale 1" : 5'

Maximum flow depth in any portion of the channel will be less than 1.32 ft.

Therefore, the minimum freeboard will be 0.68 ft.

Main Channel Design for Culvert Removal by Highway

Ave slope = 0.1 (Conservative)

Peak flow = 159.42 cfs

Assume 12" rip rap.

$n = 0.0395(1)^{1/6} = 0.0395$

velocity = 11.06 fps. < 11.3 fps ok

Using figure 12" riprap is acceptable

Depth = 1.23 ft
freeboard = 0.77 ft.

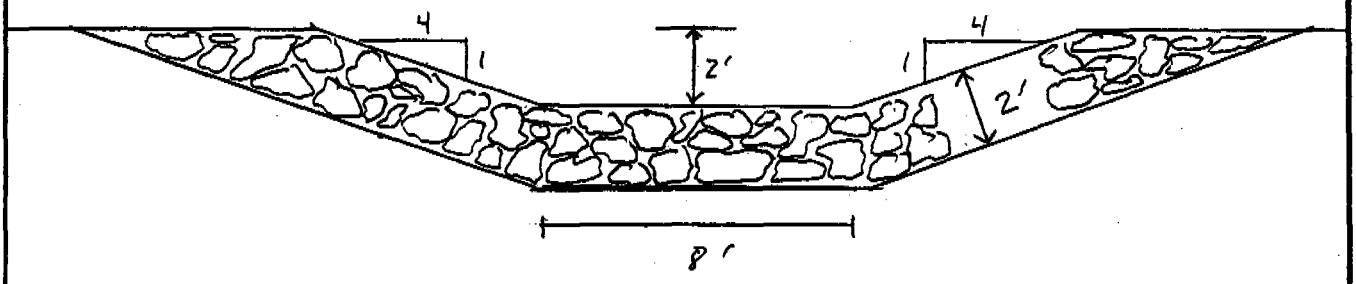

Length = 100 ft
Area = 32 ft²
Vol of Rip rap = (32 ft²)(100 ft) = 3200 ft³
Vol of filter = (36 ft²)(100 ft) = 3600 ft³

Trapezoidal Channel Analysis & Design
Open Channel - Uniform flow

Worksheet Name: main by highway

Comment: main channel by highway to replace culvert

Solve For Depth

Given Input Data:

Bottom Width.....	8.00 ft
Left Side Slope..	3.00:1 (H:V)
Right Side Slope.	3.00:1 (H:V)
Manning's n.....	0.040
Channel Slope....	0.1000 ft/ft
Discharge.....	159.42 cfs

Computed Results:

Depth.....	1.23 ft
Velocity.....	11.06 fps
Flow Area.....	14.42 sf
Flow Top Width...	15.40 ft
Wetted Perimeter.	15.80 ft
Critical Depth...	1.83 ft
Critical Slope...	0.0223 ft/ft
Froude Number....	2.01 (flow is Supercritical)

Undisturbed Area Drainage Channels

Methodology

1) A Manning (n) value of 0.035 was used for all channels unless riprap was required and then n was altered according to the equation

$$n = 0.0395 (D_{50})^{1/6}$$

2) Riprap sizing was determined using the figure on the following page. The filter blanket below the riprap has not been designed. The filter gradation will be determined based on the bare material gradation after rough grading at the site has been completed. If appropriate a filter fabric may be used instead.

3) Design capacity of the ephemeral drainage channels are based upon the 10 yr-6 hr storm event.

4) Riprap design is based upon the max velocity generated in the channel by the 10 yr-6 hr storm event

5) A channel that does not have velocities generated in excess of 3 fps does not usually need riprap

6) 10 yr - 6 hr storm event = 1.4 inches
SCS type 'B' distribution

Note:

The slopes in the following designs are only for the Channels in the reclaimed areas.

Any flowrate given is the peak flowrate generated by a 10 yr-6 hr storm event.

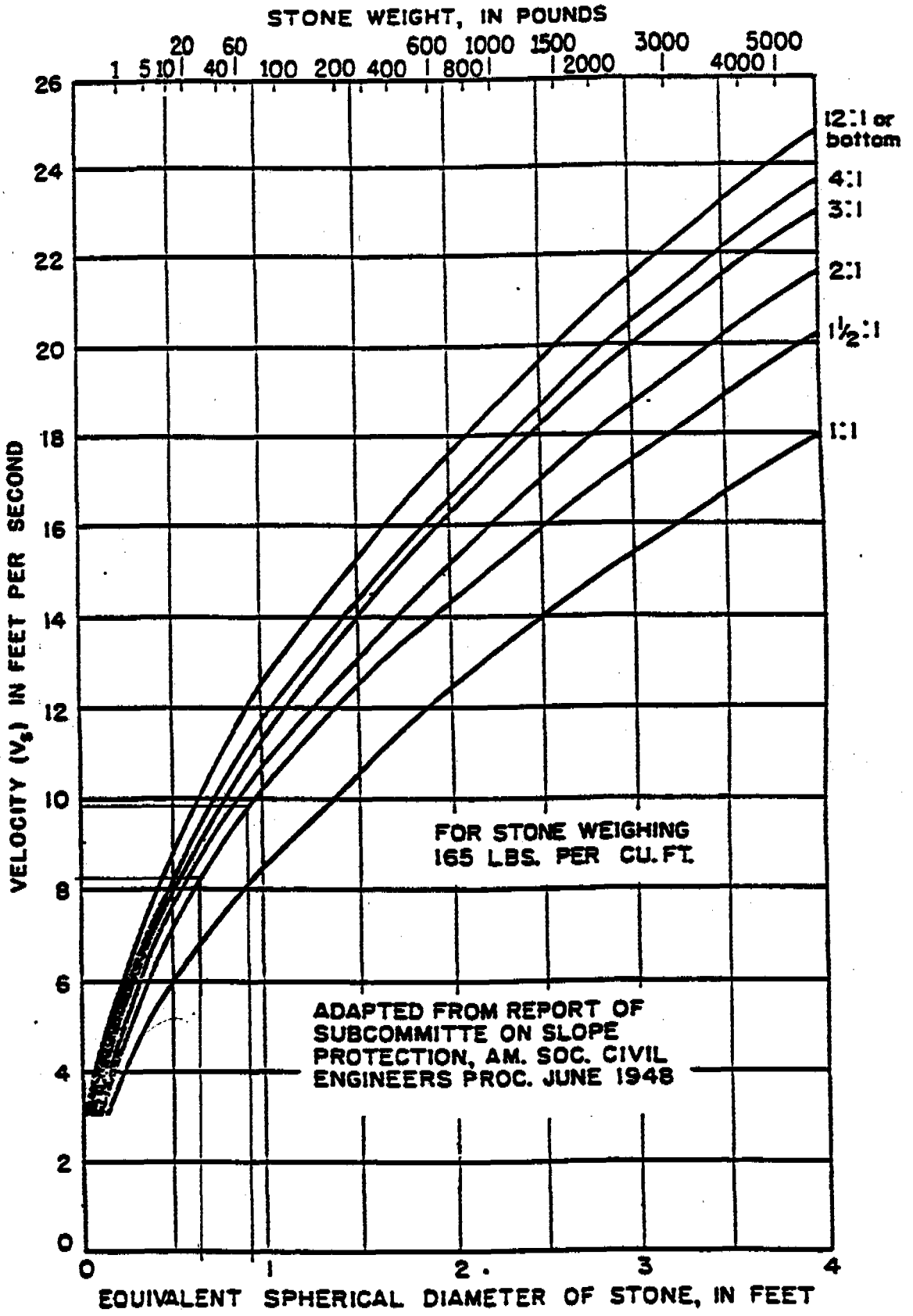

FIG. 2-SIZE OF STONE THAT WILL RESIST DISPLACEMENT FOR VARIOUS VELOCITIES AND SIDE SLOPES

Source: HEC-11

WS-1

None of the runoff generated by rainfall on WS-1 crosses a reclaimed area. Therefore no channels needed to be designed.

CCRD-2 (WS-2)

max. slope = 0.32 ft/ft
min. slope = 0.08 ft/ft
velocity = 4.38 fps Riprap needed
Depth = 0.21 ft
flowrate = 0.45 cfs
Freeboard = 0.79 ft

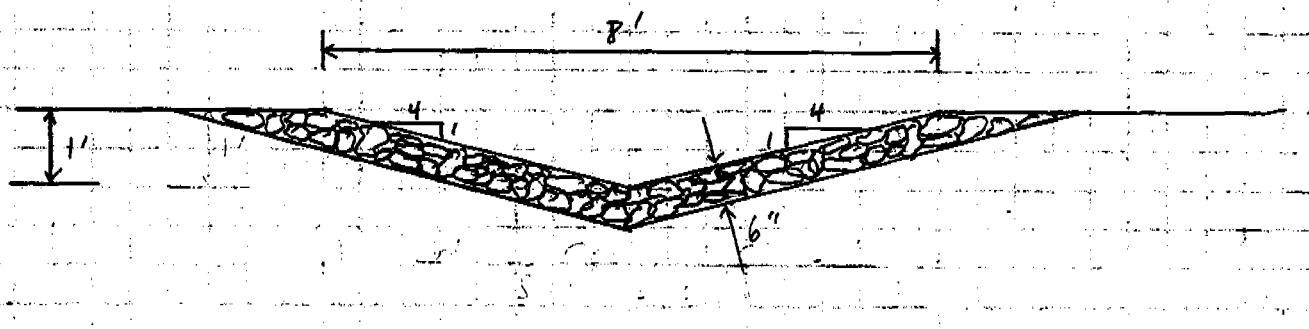

D_{50} = 3" VELOCITY < 6.0 FPS OK

Riprap vol = (5.25 ft²)(130 ft) = 682.5 ft³
Filter vol = (16 ft²)(130 ft) = 2080 ft³

Filter thickness is assumed to be 1' thick for the bond estimation. No design will be done until rough grading is complete.

WS-2 Drainage Channel
Scale 2" : 5'

WS-3

Flow rate = 0.04 cfs

The runoff from WS-3 does not flow into a channel. The runoff is in the form of sheet flow Therefore, no channel has been designed.

CCRD-4: (WS-4)

max. slope = 0.4 ft/ft
min. slope = 0.049 ft/ft
velocity = 4.84 fps ∴ riprap needed
Depth = 0.55 ft
flowrate = 0.48 cfs
freeboard = 0.45 ft

VELOCITY < 6.0 FPS OK

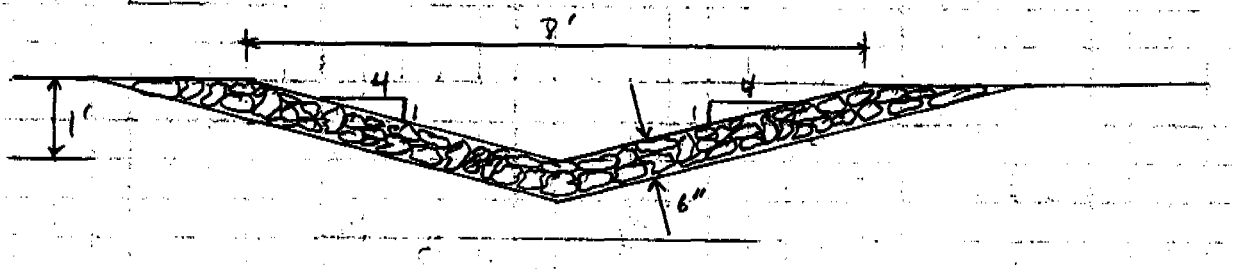

$D_{50} = 3''$

R.prap Vol = (5.25 ft²)(180 ft) = 945 ft³
filter Vol = (16 ft²)(180 ft) = 2880 ft³

WS-4 Drainage Channel
Scale 2":5'

WS-5

The runoff from WS-5 does not channelize. Therefore, no design is necessary.

Flowrate = 0.04 cfs.

CCRD-6 (WS-6)

max. slope = 0.09 ft/ft
min. slope = 0.029 ft/ft
velocity = 4.14 fps ∴ riprap needed
Depth = 0.47 ft
Flowrate = 2.41 cfs
Freeboard = 0.53 ft

Velocity < 6.0 fps OK

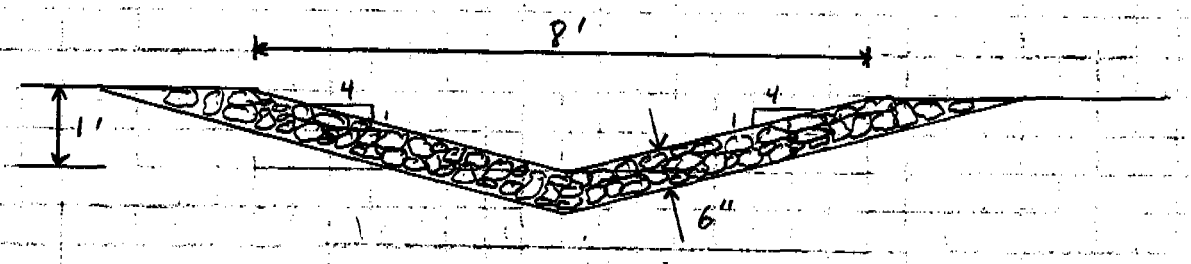

D_{50} = 3'

Vol Riprap = (5.25 ft²)(440 ft) = 2310 ft³
Vol filter = (16 ft²)(440 ft) = 7040 ft³

WS-6 Drainage Channel
Scale 2":5'

WS-7

Runoff from WS-7 does not channelize.
Therefore, no design is necessary

Flowrate = 0.13 cfs

ECRO-8 (WS-8)

max slope	=	0.16 ft/ft
min. slope	=	0.064 ft/ft
velocity	=	3.43 fps
Depth	=	0.22 ft
Flowrate	=	0.48 cfs
freeboard	=	0.78 ft

VELOCITY < 6.0 FPS OK

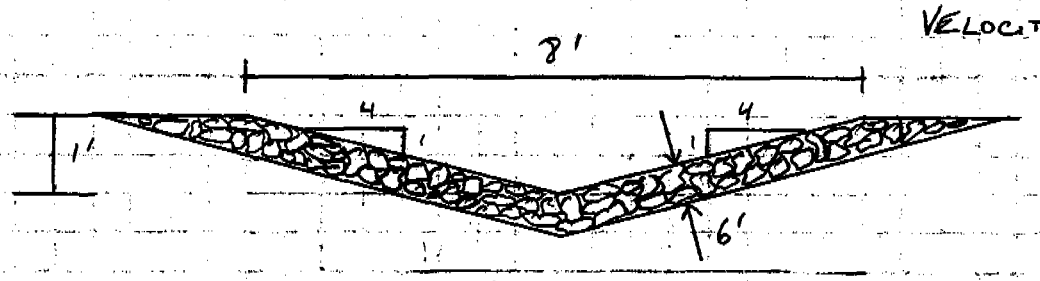

D_{50} = 3"

Vol Riprap = (5.25 ft²)(130 ft) = 682.5 ft³
Vol Filter = (16 ft²)(130 ft) = 2080 ft³

WS-8 Drainage Channel
Scale 2" : 5'

WS-9

Runoff from WS-9 does not channelize. Therefore, no design is necessary.

Flowrate = 0.04 cfs

WS-10

This watershed does not drain over any reclaimed area before it gets to the main channel. The design of the main channel has been done in a previous section. No design is needed

CCRD-11 (WS-11)

This watershed drains to an existing channel on the side of the leach pad. This channel will remain, however, the culvert will be replaced by a channel.

Ave slope = 0.1 ft/ft
velocity = 2.93 fps
Depth = 0.21 ft
flowrate = 0.52 cfs
freeboard = 0.79 ft

VELOCITY < 3.0 FPS OK

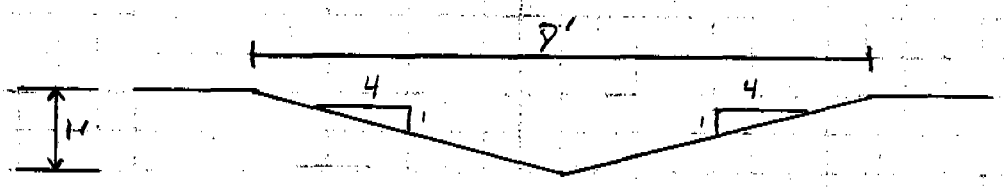

WS-11 Drainage Channel
Scale 2" = 5'

UCRD-12 (WS-12)

Ave Slope = 0.06 ft/ft
velocity = 4.23 fps
Depth = 0.53 ft
flowrate = 4.84 cfs
freeboard = 0.47 ft

VELOCITY < 6.0 FPS ok

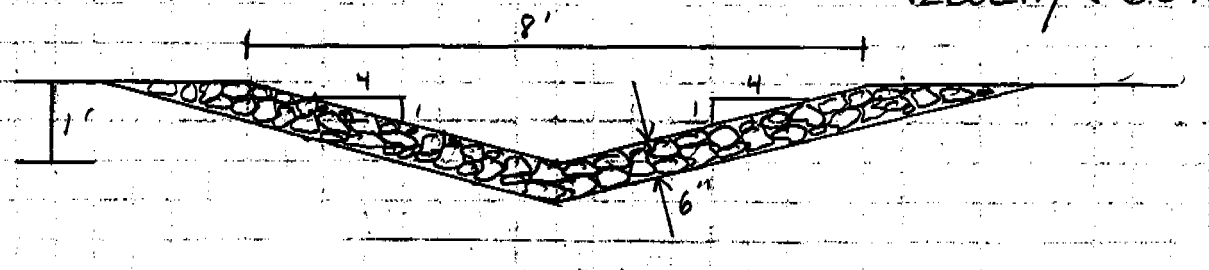

D_{50} = 3"

Vol Riprap = (5.25 ft²)(100 ft) = 525 ft³
Vol filter = (16 ft²)(100 ft) = 1600 ft³

WS-12 Drainage Channel
Scale 2" : 5'

WS-13

Runoff from WS-13 does not channelize.
Therefore, no design is necessary.

CCRD-14 (WS-14)

Ave Slope = 0.133 ft/ft
velocity = 3.34 fps RIPRAP NEEDED
Depth = 0.21 ft
flowrate = 0.57 cfs
freeboard = 0.79 ft

VELOCITY < 6.0 FPS OK

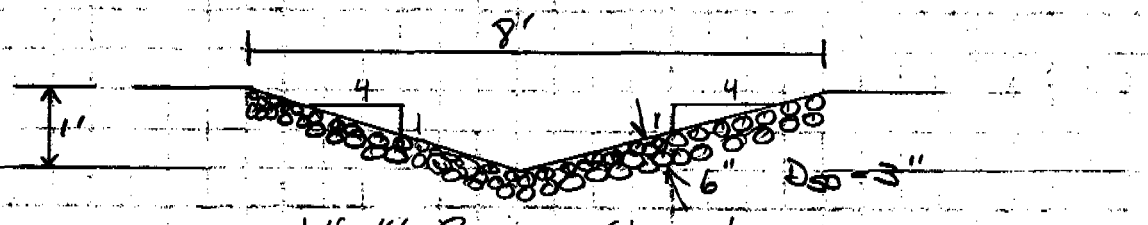

WS-14 Drainage Channel
Scale 2" : 5'

RIPRAP VOL. (5.25 FT²)(100 FT) = 525 FT³
FILTER VOL. (16 FT²)(100 FT) = 1600 FT³

WS-15

Runoff does not channelize. Therefore, no channel design is necessary.

CCRD-16 (WS-16)

Ave Slope = 0.121 ft/ft
velocity = 2.60 fps
Depth = 0.15 ft
flowrate = 0.24 cfs
freeboard = 0.85 ft.

VELOCITY < 3.0 FPS OK

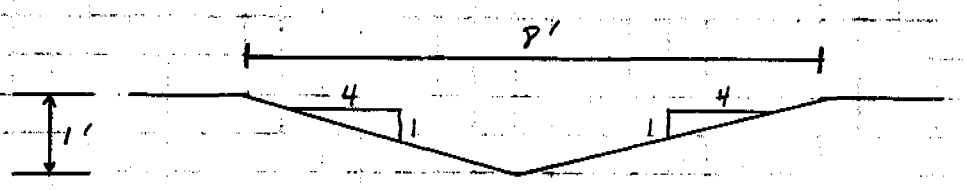

WS-16 Drainage Channel
Scale 2" : 5'

WS-17 + WS-18

Runoff does not channelize to an extent that a designed channel is necessary.

CCRD-19 (WS-19).

max slope = 0.16 ft/ft
min slope = 0.053 ft/ft
velocity = 5.70 fps
Depth = 0.73 ft
flowrate = 2.55 cfs
freeboard = 0.57 ft

VELOCITY < 6.0 fps OK

D_{50} required = 3" riprap

Approx. Riprap Volume = (5.25 ft²)(200 ft) = 1050 ft³
Filter vol = (16 ft²)(200) = 3200 ft³

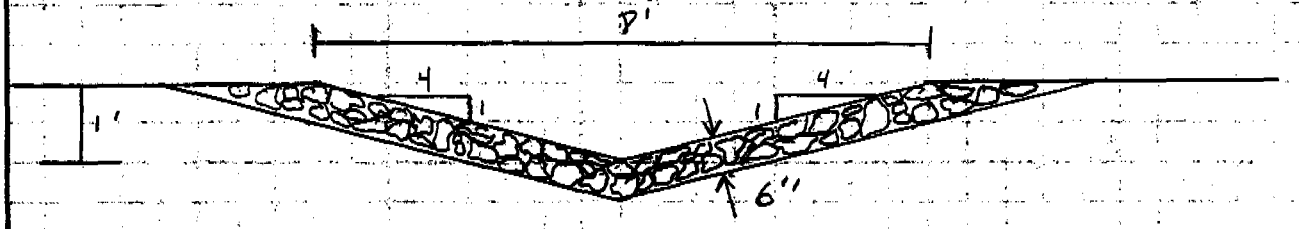

WS-19 Drainage Channel
Scale 2" : 5'

WS-20 Channel

Runoff does not channelize. Therefore, no channel design is necessary. Only sheet flow occurs.

CCRD-21 (WS-21)

max slope = 0.053 ft/ft
min. slope = 0.032 ft/ft
velocity = 2.17 fps
Depth = 0.24 ft
flowrate = 0.40 cfs
freeboard = 0.76 ft.

VELOCITY < 3.0 FPS OK

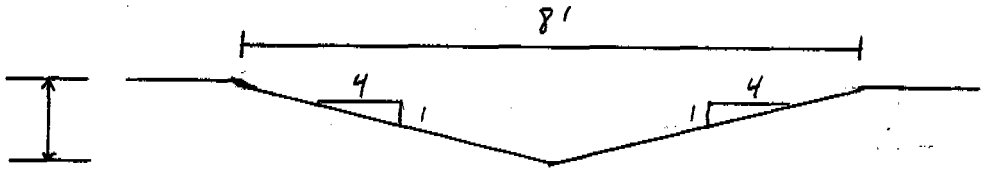

WS-21 Drainage Channel
Scale 2" : 5'

WS-22

Runoff does not channelize. Therefore no channel design is required.

CCRD-23 (WS-21)

Ave Slope = 0.176 ft/ft
velocity = 3.42 fps
Depth = 0.17 ft
flowrate = 0.41 cfs
freeboard = 0.83 ft.

VELOCITY < 6.0 FPS
OK

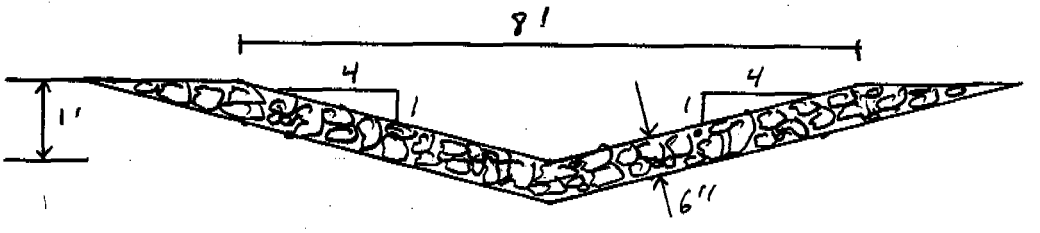

D_{50} = 3"
Vol RipRap = (5.25 ft²)(170 ft) = 892.5 ft³
Vol Filter = (16 ft²)(170 ft) = 2720 ft³

WS-23 Drainage Channel
Scale 2" : 5'

WS-24

Runoff does not channelize. Therefore no Channel design is needed.

CCRD-25 (WS-25)

Ave Slope = 0.24 ft/ft
Velocity = 3.29 fps
Depth = 0.13 ft
flowrate = 0.22 cfs
freeboard = 0.87 ft.

Velocity < 6.0 fps
ok

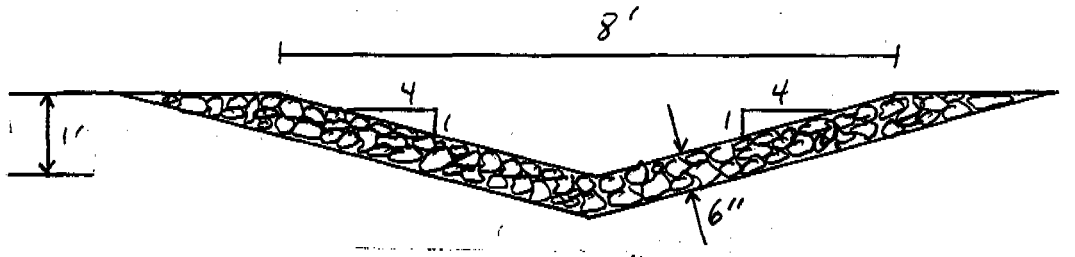

D_{50} = 3"
Riprap Vol = (5.25 ft²)(125 ft) = 656.25 ft³
Filter Vol = (16 ft²)(125 ft) = 2000 ft³

WS-26

Runoff does not channelize. Therefore, no channel design is necessary.

WS-27 Channel

Ave Slope = 0.27 ft/ft
Velocity = 3.68 fps
Depth = 0.14 ft
flowrate = 0.29 cfs
freeboard = 0.86 ft.

See Next Page

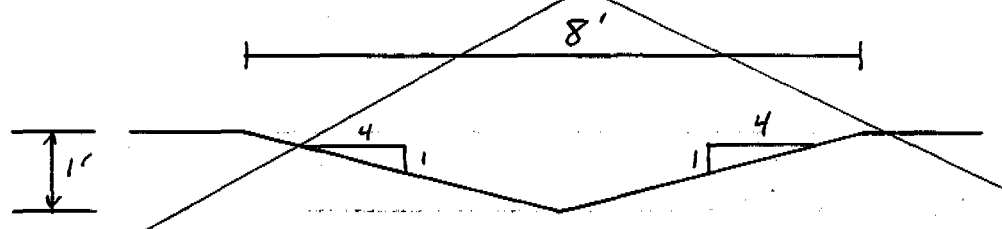

WS-27 Drainage Channel
Scale 2":5'

CCRO-27 (WS-27)

Ave Slope = 0.27 ft/ft
Velocity = 3.68 Fps
Depth = 0.14 ft
flow rate = 0.29 cfs
freeboard = 0.86 ft

VELOCITY < 6.0 FPS OK

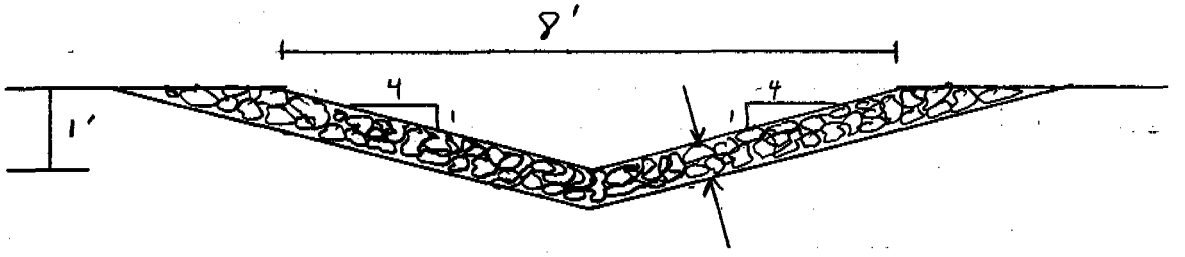

D_{50} = 3"

Riprap Vol = (5.25 ft²)(90 ft) = 472.5 ft³
Filter Vol = (16 ft²)(90 ft) = 1440.0 ft³

WS-27 Drainage Channel
Scale 2" : 5'

WS-28 + WS-29

Runoff does not channelize. Therefore, Channel design is not necessary.

CCRD-30 (WS-30)

Ave Slope = 0.175 ft/ft
Velocity = 4.15 fps
Depth = 0.23 ft
flowrate = 0.90 cfs
freeboard = 0.77 ft

VELOCITY < 6.0 FPS
OK

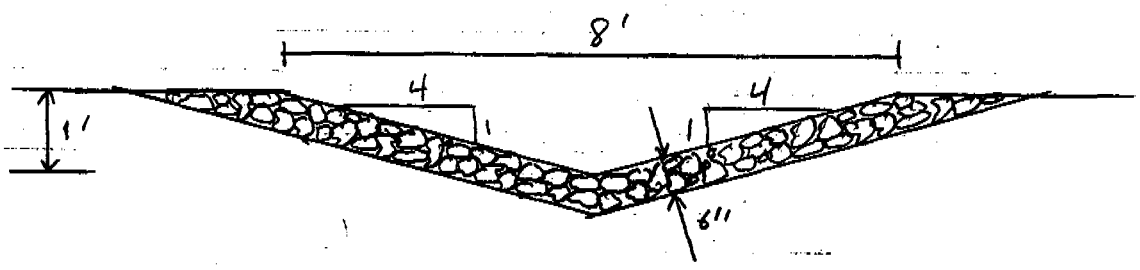

$D_{50} = 3''$

Vol Riprap = (5.25 ft²)(80 ft) = 420 ft³
Vol Filter = (16 ft²)(80 ft) = 1280 ft³

WS-30 Drainage Channel
Scale 2" : 5'

WS-31

Runoff does not channelize. Therefore, no channel design is needed.

CCRD-32 (WS-32)

Ave slope = 0.093 ft/ft
Velocity = 2.89 fps
Depth = 0.22 ft
Flowrate = 0.55 cfs
Freeboard = 0.78 ft.

VELOCITY < 3.0 FPS
OK

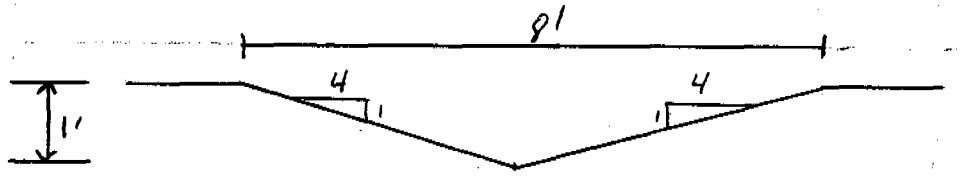

WS-32 Drainage Channel
Scale 2":5'

WS-33

Runoff does not channelize. Therefore, a channel design is not needed.

CCRD-34 (WS-34)

Ave Slope = 0.273 ft/ft
Velocity = 3.66 fps
Depth = 0.14 ft
Flowrate = 0.28 cfs
Freeboard = 0.86 ft.

VELOCITY < 6.0 FPS
OK

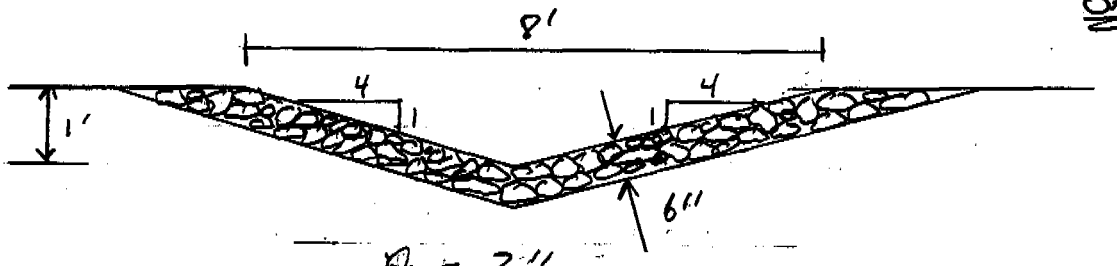

D_{50} = 3"
Vol Riprap = (5.25 ft²)(110 ft) = 577.5 ft³
Vol Filter = (16 ft²)(110 ft) = 1760 ft³

WS-34 Drainage Channel
Scale 2" : 5'

EARTHFAX ENGINEERING, INC.
ENGINEERS / SCIENTISTS

PROJECT NC-412 PAGE ____ OF ____
COMPUTED LKJ DATE Aug 30, 1995
CHECKED ____ DATE ____

WS-35 to WS-38

None of these watersheds flow into a channel so no design is needed.

Trapezoidal Channel Analysis & Design
Open Channel - Uniform flow

Worksheet Name: ws-2

Comment: drainage ditch for ws - 2 max slope

Solve For Depth

Given Input Data:

Bottom Width.....	0.00 ft
Left Side Slope..	4.00:1 (H:V)
Right Side Slope.	4.00:1 (H:V)
Manning's n.....	0.035
Channel Slope....	0.3200 ft/ft
Discharge.....	0.45 cfs

Computed Results:

Depth.....	0.16 ft
Velocity.....	4.38 fps
Flow Area.....	0.10 sf
Flow Top Width...	1.28 ft
Wetted Perimeter.	1.32 ft
Critical Depth...	0.24 ft
Critical Slope...	0.0377 ft/ft
Froude Number....	2.72 (flow is Supercritical)

Trapezoidal Channel Analysis & Design
Open Channel - Uniform flow

Worksheet Name: ws-2 min

Comment: rec. ditch ws - 2 min slope

Solve For Depth

Given Input Data:

Bottom Width.....	0.00 ft
Left Side Slope..	4.00:1 (H:V)
Right Side Slope.	4.00:1 (H:V)
Manning's n.....	0.035
Channel Slope....	0.0800 ft/ft
Discharge.....	0.45 cfs

Computed Results:

Depth.....	0.21 ft
Velocity.....	2.60 fps
Flow Area.....	0.17 sf
Flow Top Width...	1.66 ft
Wetted Perimeter.	1.71 ft
Critical Depth...	0.24 ft
Critical Slope...	0.0377 ft/ft
Froude Number....	1.42 (flow is Supercritical)

Trapezoidal Channel Analysis & Design
Open Channel - Uniform flow

Worksheet Name: ws-4 max

Comment: recl.ditch ws - 4 max slope

Solve For Depth

Given Input Data:

Bottom Width.....	0.00 ft
Left Side Slope..	4.00:1 (H:V)
Right Side Slope.	4.00:1 (H:V)
Manning's n.....	0.035
Channel Slope....	0.4000 ft/ft
Discharge.....	0.48 cfs

Computed Results:

Depth.....	0.16 ft
Velocity.....	4.84 fps
Flow Area.....	0.10 sf
Flow Top Width...	1.26 ft
Wetted Perimeter.	1.30 ft
Critical Depth...	0.25 ft
Critical Slope...	0.0374 ft/ft
Froude Number....	3.04 (flow is Supercritical)

Trapezoidal Channel Analysis & Design
Open Channel - Uniform flow

Worksheet Name: ws-4 min

Comment: recl. ditch ws - 4 min slope

Solve For Depth

Given Input Data:

Bottom Width.....	0.00 ft
Left Side Slope..	4.00:1 (H:V)
Right Side Slope.	4.00:1 (H:V)
Manning's n.....	0.350
Channel Slope....	0.0490 ft/ft
Discharge.....	0.48 cfs

Computed Results:

Depth.....	0.55 ft
Velocity.....	0.39 fps
Flow Area.....	1.23 sf
Flow Top Width...	4.43 ft
Wetted Perimeter.	4.57 ft
Critical Depth...	0.25 ft
Critical Slope...	3.7418 ft/ft
Froude Number....	0.13 (flow is Subcritical)

Trapezoidal Channel Analysis & Design
Open Channel - Uniform flow

Worksheet Name: ws-6 max

Comment: recl. ditch ws - 6 max slope

Solve For Depth

Given Input Data:

Bottom Width.....	0.00 ft
Left Side Slope..	4.00:1 (H:V)
Right Side Slope.	4.00:1 (H:V)
Manning's n.....	0.035
Channel Slope....	0.0900 ft/ft
Discharge.....	2.41 cfs

Computed Results:

Depth.....	0.38 ft
Velocity.....	4.14 fps
Flow Area.....	0.58 sf
Flow Top Width...	3.05 ft
Wetted Perimeter.	3.15 ft
Critical Depth...	0.47 ft
Critical Slope...	0.0302 ft/ft
Froude Number....	1.67 (flow is Supercritical)

Trapezoidal Channel Analysis & Design
Open Channel - Uniform flow

Worksheet Name: ws-6 min

Comment: recl. ditch ws - 6 min slope

Solve For Depth

Given Input Data:

Bottom Width.....	0.00 ft
Left Side Slope..	4.00:1 (H:V)
Right Side Slope.	4.00:1 (H:V)
Manning's n.....	0.035
Channel Slope....	0.0290 ft/ft
Discharge.....	2.41 cfs

Computed Results:

Depth.....	0.47 ft
Velocity.....	2.71 fps
Flow Area.....	0.89 sf
Flow Top Width...	3.78 ft
Wetted Perimeter.	3.89 ft
Critical Depth...	0.47 ft
Critical Slope...	0.0302 ft/ft
Froude Number....	0.98 (flow is Subcritical)

Trapezoidal Channel Analysis & Design
Open Channel - Uniform flow

Worksheet Name: ws-8 max

Comment: recl. ws - 8 max slope

Solve For Depth

Given Input Data:

Bottom Width.....	0.00 ft
Left Side Slope..	4.00:1 (H:V)
Right Side Slope.	4.00:1 (H:V)
Manning's n.....	0.035
Channel Slope....	0.1600 ft/ft
Discharge.....	0.48 cfs

Computed Results:

Depth.....	0.19 ft
Velocity.....	3.43 fps
Flow Area.....	0.14 sf
Flow Top Width...	1.50 ft
Wetted Perimeter.	1.54 ft
Critical Depth...	0.25 ft
Critical Slope...	0.0374 ft/ft
Froude Number....	1.98 (flow is Supercritical)

Trapezoidal Channel Analysis & Design
Open Channel - Uniform flow

Worksheet Name: ws-8 min

Comment: recl. ditch ws - 8 min slope

Solve For Depth

Given Input Data:

Bottom Width.....	0.00 ft
Left Side Slope..	4.00:1 (H:V)
Right Side Slope.	4.00:1 (H:V)
Manning's n.....	0.035
Channel Slope....	0.0640 ft/ft
Discharge.....	0.48 cfs

Computed Results:

Depth.....	0.22 ft
Velocity.....	2.43 fps
Flow Area.....	0.20 sf
Flow Top Width...	1.78 ft
Wetted Perimeter.	1.83 ft
Critical Depth...	0.25 ft
Critical Slope...	0.0374 ft/ft
Froude Number....	1.29 (flow is Supercritical)

Open Channel Flow Module, Version 3.2 (c) 1990
Haestad Methods, Inc. * 37 Brookside Rd * Waterbury, Ct 06708

Triangular Channel Analysis & Design
Open Channel - Uniform flow

Worksheet Name: ws-11

Comment: drainage channel ws - 11 ave slope

Solve For Depth

Given Input Data:

Left Side Slope..	4.00:1 (H:V)
Right Side Slope.	4.00:1 (H:V)
Manning's n.....	0.035
Channel Slope....	0.1000 ft/ft
Discharge.....	0.52 cfs

Computed Results:

Depth.....	0.21 ft
Velocity.....	2.93 fps
Flow Area.....	0.18 sf
Flow Top Width...	1.68 ft
Wetted Perimeter.	1.74 ft
Critical Depth...	0.25 ft
Critical Slope...	0.0370 ft/ft
Froude Number....	1.59 (flow is Supercritical)

Triangular Channel Analysis & Design
Open Channel - Uniform flow

Worksheet Name: ws-12

Comment: Drainage channel ws - 12 ave slope

Solve For Depth

Given Input Data:

Left Side Slope..	4.00:1 (H:V)
Right Side Slope.	4.00:1 (H:V)
Manning's n.....	0.035
Channel Slope....	0.0600 ft/ft
Discharge.....	4.84 cfs

Computed Results:

Depth.....	0.53 ft
Velocity.....	4.23 fps
Flow Area.....	1.14 sf
Flow Top Width...	4.28 ft
Wetted Perimeter.	4.41 ft
Critical Depth...	0.62 ft
Critical Slope...	0.0275 ft/ft
Froude Number....	1.44 (flow is Supercritical)

Triangular Channel Analysis & Design
Open Channel - Uniform flow

Worksheet Name:

Comment: Drainage channel ws - 14 ave slope

Solve For Depth

Given Input Data:

Left Side Slope..	4.00:1 (H:V)
Right Side Slope.	4.00:1 (H:V)
Manning's n.....	0.035
Channel Slope....	0.1330 ft/ft
Discharge.....	0.57 cfs

Computed Results:

Depth.....	0.21 ft
Velocity.....	3.34 fps
Flow Area.....	0.17 sf
Flow Top Width...	1.65 ft
Wetted Perimeter.	1.70 ft
Critical Depth...	0.26 ft
Critical Slope...	0.0366 ft/ft
Froude Number....	1.83 (flow is Supercritical)

Triangular Channel Analysis & Design
Open Channel - Uniform flow

Worksheet Name: ws-16

Comment: drainage channel ws - 16 ave slope

Solve For Depth

Given Input Data:

Left Side Slope..	4.00:1 (H:V)
Right Side Slope.	4.00:1 (H:V)
Manning's n.....	0.035
Channel Slope....	0.1210 ft/ft
Discharge.....	0.24 cfs

Computed Results:

Depth.....	0.15 ft
Velocity.....	2.60 fps
Flow Area.....	0.09 sf
Flow Top Width...	1.22 ft
Wetted Perimeter.	1.25 ft
Critical Depth...	0.19 ft
Critical Slope...	0.0410 ft/ft
Froude Number....	1.66 (flow is Supercritical)

Open Channel Flow Module, Version 3.2 (c) 1990
Haestad Methods, Inc. * 37 Brookside Rd * Waterbury, Ct 06708

Trapezoidal Channel Analysis & Design
Open Channel - Uniform flow

Worksheet Name: ws-19

Comment: recl. ditch ws - 19 max slope

Solve For Depth

Given Input Data:

Bottom Width.....	0.00 ft
Left Side Slope..	4.00:1 (H:V)
Right Side Slope.	4.00:1 (H:V)
Manning's n.....	0.031
Channel Slope....	0.1600 ft/ft
Discharge.....	2.55 cfs

Computed Results:

Depth.....	0.33 ft
Velocity.....	5.70 fps
Flow Area.....	0.45 sf
Flow Top Width...	2.67 ft
Wetted Perimeter.	2.76 ft
Critical Depth...	0.48 ft
Critical Slope...	0.0235 ft/ft
Froude Number....	2.46 (flow is Supercritical)

Open Channel Flow Module, Version 3.2 (c) 1990
Haestad Methods, Inc. * 37 Brookside Rd * Waterbury, Ct 06708

Trapezoidal Channel Analysis & Design
Open Channel - Uniform flow

Worksheet Name: ws-19 min

Comment: recl. ditch ws-19 min slope

Solve For Depth

Given Input Data:

Bottom Width.....	0.00 ft
Left Side Slope..	4.00:1 (H:V)
Right Side Slope.	4.00:1 (H:V)
Manning's n.....	0.035
Channel Slope....	0.0530 ft/ft
Discharge.....	2.55 cfs

Computed Results:

Depth.....	0.43 ft
Velocity.....	3.44 fps
Flow Area.....	0.74 sf
Flow Top Width...	3.44 ft
Wetted Perimeter.	3.55 ft
Critical Depth...	0.48 ft
Critical Slope...	0.0299 ft/ft
Froude Number....	1.31 (flow is Supercritical)

Open Channel Flow Module, Version 3.2 (c) 1990
Haestad Methods, Inc. * 37 Brookside Rd * Waterbury, Ct 06708

Trapezoidal Channel Analysis & Design
Open Channel - Uniform flow

Worksheet Name: ws-21

Comment: recl ditch ws - 21 max slope

Solve For Depth

Given Input Data:

Bottom Width.....	0.00 ft
Left Side Slope..	4.00:1 (H:V)
Right Side Slope.	4.00:1 (H:V)
Manning's n.....	0.035
Channel Slope....	0.0530 ft/ft
Discharge.....	0.40 cfs

Computed Results:

Depth.....	0.21 ft
Velocity.....	2.17 fps
Flow Area.....	0.18 sf
Flow Top Width...	1.72 ft
Wetted Perimeter.	1.77 ft
Critical Depth...	0.23 ft
Critical Slope...	0.0383 ft/ft
Froude Number....	1.16 (flow is Supercritical)

Open Channel Flow Module, Version 3.2 (c) 1990
Haestad Methods, Inc. * 37 Brookside Rd * Waterbury, Ct 06708

Trapezoidal Channel Analysis & Design
Open Channel - Uniform flow

Worksheet Name: ws-21 min

Comment: recl. ditch ws - 21 min slope

Solve For Depth

Given Input Data:

Bottom Width.....	0.00 ft
Left Side Slope..	4.00:1 (H:V)
Right Side Slope.	4.00:1 (H:V)
Manning's n.....	0.035
Channel Slope....	0.0320 ft/ft
Discharge.....	0.40 cfs

Computed Results:

Depth.....	0.24 ft
Velocity.....	1.79 fps
Flow Area.....	0.22 sf
Flow Top Width...	1.89 ft
Wetted Perimeter.	1.95 ft
Critical Depth...	0.23 ft
Critical Slope...	0.0383 ft/ft
Froude Number....	0.92 (flow is Subcritical)

Open Channel Flow Module, Version 3.2 (c) 1990
Haestad Methods, Inc. * 37 Brookside Rd * Waterbury, Ct 06708

Triangular Channel Analysis & Design
Open Channel - Uniform flow

Worksheet Name: ws-23

Comment: drainage channel ws - 23 ave slope

Solve For Depth

Given Input Data:

Left Side Slope..	4.00:1 (H:V)
Right Side Slope.	4.00:1 (H:V)
Manning's n.....	0.035
Channel Slope....	0.1760 ft/ft
Discharge.....	0.41 cfs

Computed Results:

Depth.....	0.17 ft
Velocity.....	3.42 fps
Flow Area.....	0.12 sf
Flow Top Width...	1.39 ft
Wetted Perimeter.	1.43 ft
Critical Depth...	0.23 ft
Critical Slope...	0.0382 ft/ft
Froude Number....	2.05 (flow is Supercritical)

Triangular Channel Analysis & Design
Open Channel - Uniform flow

Worksheet Name: ws-25

Comment: drainage channel ws - 25 ave slope

Solve For Depth

Given Input Data:

Left Side Slope..	4.00:1 (H:V)
Right Side Slope.	4.00:1 (H:V)
Manning's n.....	0.035
Channel Slope....	0.2400 ft/ft
Discharge.....	0.22 cfs

Computed Results:

Depth.....	0.13 ft
Velocity.....	3.29 fps
Flow Area.....	0.07 sf
Flow Top Width...	1.04 ft
Wetted Perimeter.	1.07 ft
Critical Depth...	0.18 ft
Critical Slope...	0.0415 ft/ft
Froude Number....	2.28 (flow is Supercritical)

Triangular Channel Analysis & Design
Open Channel - Uniform flow

Worksheet Name: ws-27

Comment: drainage channel ws - 27 ave slope

Solve For Depth

Given Input Data:

Left Side Slope..	4.00:1 (H:V)
Right Side Slope.	4.00:1 (H:V)
Manning's n.....	0.035
Channel Slope....	0.2700 ft/ft
Discharge.....	0.29 cfs

Computed Results:

Depth.....	0.14 ft
Velocity.....	3.68 fps
Flow Area.....	0.08 sf
Flow Top Width...	1.12 ft
Wetted Perimeter.	1.16 ft
Critical Depth...	0.20 ft
Critical Slope...	0.0400 ft/ft
Froude Number....	2.45 (flow is Supercritical)

Open Channel Flow Module, Version 3.2 (c) 1990
Haestad Methods, Inc. * 37 Brookside Rd * Waterbury, Ct 06708

Triangular Channel Analysis & Design
Open Channel - Uniform flow

Worksheet Name: ws-30

Comment: drainage channel ws - 30 ave slope

Solve For Depth

Given Input Data:

Left Side Slope..	4.00:1 (H:V)
Right Side Slope.	4.00:1 (H:V)
Manning's n.....	0.035
Channel Slope....	0.1750 ft/ft
Discharge.....	0.90 cfs

Computed Results:

Depth.....	0.23 ft
Velocity.....	4.15 fps
Flow Area.....	0.22 sf
Flow Top Width...	1.86 ft
Wetted Perimeter.	1.92 ft
Critical Depth...	0.32 ft
Critical Slope...	0.0344 ft/ft
Froude Number....	2.14 (flow is Supercritical)

Triangular Channel Analysis & Design
Open Channel - Uniform flow

Worksheet Name: ws-32

Comment: drainage channel ws - 32 ave slope

Solve For Depth

Given Input Data:

Left Side Slope..	4.00:1 (H:V)
Right Side Slope.	4.00:1 (H:V)
Manning's n.....	0.035
Channel Slope....	0.0930 ft/ft
Discharge.....	0.55 cfs

Computed Results:

Depth.....	0.22 ft
Velocity.....	2.89 fps
Flow Area.....	0.19 sf
Flow Top Width...	1.74 ft
Wetted Perimeter.	1.80 ft
Critical Depth...	0.26 ft
Critical Slope...	0.0367 ft/ft
Froude Number....	1.55 (flow is Supercritical)

Triangular Channel Analysis & Design
Open Channel - Uniform flow

Worksheet Name: ws-34

Comment: drainage channel ws - 34 ave slope

Solve For Depth

Given Input Data:

Left Side Slope..	4.00:1 (H:V)
Right Side Slope.	4.00:1 (H:V)
Manning's n.....	0.035
Channel Slope....	0.2730 ft/ft
Discharge.....	0.28 cfs

Computed Results:

Depth.....	0.14 ft
Velocity.....	3.66 fps
Flow Area.....	0.08 sf
Flow Top Width...	1.11 ft
Wetted Perimeter.	1.14 ft
Critical Depth...	0.20 ft
Critical Slope...	0.0402 ft/ft
Froude Number....	2.45 (flow is Supercritical)

Open Channel Flow Module, Version 3.2 (c) 1990
Haestad Methods, Inc. * 37 Brookside Rd * Waterbury, Ct 06708

APPENDIX 3.7Q

SEDIMENTATION CONTROLS

REGISTERED PROFESSIONAL ENGINEER
No. 7102
RICHARD B. WHITE
9/15/95
STATE OF UTAH

SEDIMENT YIELD COMPARISON FOR CRANDALL CANYON

NORTH FACING SLOPES

- SELECT STEEPEST SLOPE SEGMENT
  - SEE EXH. 3.1 – 3.7-7B
  - 70 FT LONG
  - 30 FT VERTICAL DROP
  - SLOPE = 42.8%

- INPUTS
  - R FACTOR = 20
  - K FACTOR = 0.25 FOR SANDY LOAM
  - LS FACTOR:

$$LS = \left(\frac{\lambda}{72.6}\right)^m \left(\frac{430x^2 + 30x + 0.43}{6.613}\right)$$

λ = SLOPE LENGTH

x = SIN θ ; θ = SLOPE ANGLE

m = EXPONENT VALUE BASED ON SLOPE.
FOR SLOPES GREATER THAN 5%
$m = 0.5$

$$LS = \left(\frac{70}{72.6}\right)^{.5} * \left(\frac{(430 * (0.394)^2) + (30 * 0.3935 + 0.43)}{6.613}\right)$$

$= 11.7$

  - CP FACTOR:
    - VARIES WITH VEGETATIVE COVER, SURFACE TREATMENT, AND AGE.

- BASED ON INPUT VALUES FROM BARFIELD, ET. AL. (1981):

  - NO TREATMENT (TABLE 5.A.1)

    CP FACTOR = 1.0

  - NATURAL COVER + SURFACE CONDITIONS (TABLE 5.A.3)

    CP FACTOR = 0.04

  - PROPOSED RECLAMATION SURFACE (TABLE 5.A.2)

    CP FACTOR = 0.028

    80% COVER ON GOOD SOIL, ROUGHENED W/ DEPRESSIONS > 6-INCH

SEDIMENT YIELD

NO TREATMENT

$A = R * K * CP * LS$

$= 20 * 0.25 * 1.0 * 11.7$

$= 58.5$ TONS/AC/YR

NATURAL CONDITIONS:

$A = 20 * 0.25 * 0.04 * 11.7$

$= 2.34$ TONS/AC/YR

RECLAIMED SURFACE

$A = 20 * 0.25 * 0.028 * 11.7$

$= 1.64$ TONS/AC/YR

COUTS FACING SLOPES

- SELECT CHECKED SLOPE SEGMENT
  - SEE EXHIBIT 5.7.7B
  - 90 FT LONG
  - 20 FT VERTICAL RISE
  - SLOPE = 22.2 %
- INPUTS
  - R FACTOR = 20
  - K FACTOR = 0.25 FOR SANDY LOAM
  - LS FACTOR:

$$LS = \left(\frac{90}{72.6}\right)^{0.5} * \left(\frac{((30*0.2167)^2)+(30*0.2167)+0.43}{6.613}\right)$$

$$= 4.57$$

  - CP FACTOR
    - NO TREATMENT 1.0
    - NATURAL COVER - SURFACE 0.1
    - PROPOSED - MULCHED 0.023

80% COVER OF LOOSE STRAW
MULCHED AND CRIMPED INTO SOIL

SEDIMENT YIELD

NO TREATMENT

A = 20 * 0.25 * 1.0 * 4.57

= 22.8 TONS/AC./YR.

NATURAL CONDITIONS

A = 20 * 0.25 * 0.1 * 4.57

= 2.3 TONS/AC/YR

SEDIMENTATION SURFACE

A = 20 * 0.25 * 0.05 * 4.57

= 0.6 TONS/ACRE

BASED ON THESE CALCULATIONS, THE RECLAIMED SURFACES WILL YIELD THE LEAST SEDIMENT.

Appendix 5A

Table 5.A.1 Typical C Factor Values Reported in the Literature.*

	Condition	C factor
1.	Bare soil conditions	
	freshly disked to 6-8 inches	1.00
	after one rain	0.89
	loose to 12 inches smooth	0.90
	loose to 12 inches rough	0.80
	compacted root raked	1.20
	compacted bulldozer scraped across slope	1.20
	same except root raked across	0.90
	rough irregular tracked all directions	0.90
	seed and fertilize, fresh, unprepared seedbed	0.64
	same after six months	0.54
	seed, fertilize and 12 months chemical	0.38
	not tilled algae crusted	0.01
	tilled algae crusted	0.02
	undisturbed except scraped	0.66 - 1.30
	scarified only	0.76 - 1.31
	sawdust 2 inches deep, disked in	0.61
2.	Asphalt emulsion	
	1210 gallons/acre	0.01 - 0.019
	605 gallons/acre	0.14 - 0.57
	302 gallons/acre	0.28 - 0.60
3.	Dust binder	
	605 gallons/acre	1.05
	1210 gallons/acre	0.29 - 0.78
4.	Other chemicals	
	1000 lb fiber glass roving with 60-150 gallons/acre	0.01 - 0.05
	Aquatain	0.68
	Aerospray 70, 10 percent cover	0.94
	Curasol AE	0.30 - 0.48
	PVA	0.71 - 0.90
	Terra-Tack	0.66
	wood fiber slurry, 1400 lb/acre fresh	0.01 - 0.02
	wood fiber slurry, 3500 lb/acre fresh	0.10
5.	Seedings[1]	
	temporary, 0 to 60 days[2]	0.40
	temporary, after 60 days	0.05
	permanent, 2 to 12 months	0.05
6.	Brush	0.35

1. If plantings are used with mulches, use the minimum C values.
2. If dry weather occurs at planting and emergence is a problem, extend the 0-60 days to a period when rainfall normally occurs.

* National Cooperative Highway Research Program, 1976.

Table 5.A.2. C Factors for Mechanically Prepared Woodland Sites.[4].

Percent of soil covered with residue in contact with soil surface	Soil Condition and Weed Cover							
	Excellent		Good		Fair		Poor	
	NC	WC	NC	WC	NC	WC	NC	WC
None								
A. Disked, raked or bedded[1,2]	.52	.20	.72	.27	.85	.32	.94	.36
B. Burned[3]	.25	.10	.26	.10	.31	.12	.45	.17
C. Drum chopped[3]	.16	.07	.17	.07	.20	.08	.29	.11
10% Cover								
A. Disked, raked or bedded[1,2]	.33	.15	.46	.20	.54	.24	.60	.26
B. Burned[3]	.23	.10	.24	.10	.26	.11	.36	.16
C. Drum chopped[3]	.15	.07	.16	.07	.17	.08	.23	.10
20% Cover								
A. Disked, raked or bedded[1,2]	.24	.12	.34	.17	.40	.20	.44	.22
B. Burned[3]	.19	.10	.19	.10	.21	.11	.27	.14
C. Drum chopped[3]	.12	.06	.12	.06	.14	.07	.18	.09
40% Cover								
A. Disked, raked or bedded[1,2]	.17	.11	.23	.14	.27	.17	.30	.19
B. Burned[3]	.14	.09	.14	.09	.15	.09	.17	.11
C. Drum chopped[3]	.09	.06	.09	.06	.10	.06	.11	.07
60% Cover								
A. Disked, raked or bedded[1,2]	.11	.08	.15	.11	.18	.14	.20	.15
B. Burned[3]	.08	.06	.09	.07	.10	.08	.11	.08
C. Drum chopped[3]	.06	.05	.06	.05	.07	.05	.07	.05
80% Cover								
A. Disked, raked or bedded[1,2]	.05	.04	.07	.06	.09	.08	.10	.09
B. Burned[3]	.04	.04	.05	.04	.05	.04	.06	.05
C. Drum chopped[3]	.03	.03	.03	.03	.03	.03	.04	.04

1. Multiply A values by following values to account for surface roughness:

Very rough, major effect on runoff and sediment storage, depressions greater than 6 inches	.40
Moderate	.65
Smooth, minor surface sediment storage, depressions less than 2 inches	.90

2. The C values for A are for the first year following treatment. For A type sites 1 to 4 years old multiply C value by .7 to account for aging. For sites 4 to 8 years old use Table 5.6. For sites more than 8 years old use Table 5.7.

3. The C values for B and C areas are for the first 3 years following treatment. For sites treated 3 to 8 years ago use Table 5.6. For sites treated more than 8 years ago use Table 5.7.
4. Soil Conservation Service (1977).

Table 5.A.3. C Factors for Permanent Pasture, Rangeland, Idle Land, and Grazed Woodland.[1,5]

Vegetal Canopy		Cover that Contacts the Surface						
Type and Height of Raised Canopy[2]	Canopy Cover[3] %	Type[4]	Percent Ground Cover 0	20	40	60	80	95-100
No appreciable canopy		G	.45	.20	.10	.042	.013	.003
		W	.45	.24	.15	.090	.043	.011
Canopy of tall weeds or short brush (0.5 m fall ht.)	25	G	.36	.17	.09	.038	.012	.003
		W	.36	.20	.13	.082	.041	.011
	50	G	.26	.13	.07	.035	.012	.003
		W	.26	.16	.11	.075	.039	.011
	75	G	.17	.10	.06	.031	.011	.003
		W	.17	.12	.09	.067	.038	.011
Appreciable brush or bushes (2 m fall ht.)	25	G	.40	.18	.09	.040	.013	.003
		W	.40	.22	.14	.085	.042	.011
	50	G	.34	.16	.085	.038	.012	.003
		W	.34	.19	.13	.081	.041	.011
	75	G	.28	.14	.08	.036	.012	.003
		W	.28	.17	.12	.077	.040	.011
Trees but no appreciable low brush (4 m fall ht.)	25	G	.42	.19	.10	.041	.013	.003
		W	.42	.23	.14	.087	.042	.011
	50	G	.39	.18	.09	.040	.013	.003
		W	.39	.21	.14	.085	.042	.011
	75	G	.36	.17	.09	.039	.012	.003
		W	.36	.20	.13	.083	.041	.011

1. All values shown assume: (1) random distribution of mulch or vegetation, and (2) mulch of appreciable depth where it exists. Idle land refers to land with undisturbed profiles for at least a period of three consecutive years. Also to be used for burned forest land and forest land that has been harvested less than three years ago.
2. Average fall height of waterdrops from canopy to soil surface: m = meters.
3. Portion of total area surface that would be hidden from view by canopy in a vertical projection (a bird's-eye view).
4. G: Cover at surface is grass, grasslike plants, decaying compacted duff or litter at least 2 inches deep.

   W: Cover at surface is mostly broadleaf herbaceous plants (as weeds with little lateral root network near the surface), and/or undecayed residue.
5. Soil Conservation Service (1977).

APPENDIX 3.7R

SLOPE STABILITY ANALYSIS FOR WORST-CASE RECLAMATION HIGHWALL FILL

REGISTERED PROFESSIONAL ENGINEER
No. 7102
RICHARD B. WHITE
9/15/95
STATE OF UTAH

SLOPE STABILITY ANALYSES FOR WORST-CASE RECLAMATION HIGHWALL FILL
CYPRUS PLATEAU MINING CORPORATION
CASTLE GATE MINE
CRANDALL CANYON
CARBON COUNTY, UTAH

CYPRUS PLATEAU MINING CORPORATION
Castle Gate Mine
Carbon County, Utah

Prepared by

EARTHFAX ENGINEERING, INC.
Midvale, Utah

August 31, 1995

REGISTERED PROFESSIONAL ENGINEER
92-187704-2202
RHETT K.
BROOKS
STATE OF UTAH

Rhett Brooks
8/31/95

BACKGROUND INFORMATION

The purpose of this project is to evaluate the stability of the worst-case reclamation slope for the Cyprus Plateau Mining Corporation at the Castle Gate Mine in Crandall Canyon. Crandall Canyon is located in Carbon County, Utah. According to regulations promulgated by the Utah Division of Oil, Gas, and Mining ("UDOGM", R645-301-553.130), reclamation slopes shall not exceed the angle of repose and shall have a minimum long-term static safety factor of greater than 1.3.

SOILS INFORMATION

The overburden and topsoil in Crandall Canyon were investigated, sampled, and tested by EarthFax Engineering, Inc. as summarized in a letter dated June 1, 1995 and submitted to Cyprus Plateau Mining Corporation. From this letter, the test pit nearest to the worst-case reclamation slope was identified as EF-7 and had the following physical characteristics:

Depth (ft.)	Description
0.0 - 1.5	Sandy loam soil matrix (about 12% clay) with about 35% coarse fragments, primarily angular gravel. The soil matrix was weak, friable, and nonplastic.
1.5 - 2.5	Sandy loam soil matrix (about 10% clay) with about 30% cobbles. The soil had a weak to moderate strength and was subangular, blocky, friable, and nonplastic.
2.5 - 4.0	Sandy loam soil matrix (about 15% clay) with about 15% coarse fragments, primarily angular boulders to 16 inches in diameter. The soil had a weak to moderate strength and was subangular, blocky, friable, and nonplastic.

Native soils similar to those encountered in Test Pit EF-7 will be used to construct the reclamation fill sections.

Calcium carbonate and other salts from the parent rock have cemented the undisturbed alluvial and colluvial soils in Crandall Canyon. This cementation, coupled with inherent slope stability provided by roots and capillarity (inter-particle moisture), enables steep slopes to form in Crandall Canyon. Upon disturbance or saturation, apparent and bonded soil strengths from capillarity and cementation decrease, leaving root structure and internal friction/cohesion to maintain a stable slope.

There are no known shear strength data from Crandall Canyon available for this report. Therefore, based on the physical characteristics of the soil, it is assumed that the soil is cohesionless (worst-case assumption) and has an angle of internal friction of 32 degrees.

SLOPE STABILITY ANALYSES

Soil slope stability analyses were performed with the computer program GEOSLOPE, which is based on the FORTRAN program STABL3, developed at Purdue University. GEOSLOPE

utilizes the limit equilibrium procedure of slices (Simplified Bishop's method) to determine the safety factor of potential failure surfaces for circular shapes.

The following assumptions were made for the slope stability analyses:

1. Native remolded and undisturbed soils are cohesionless and have an angle of internal friction of 32 degrees.

2. The reclamation fill generally doesn't become saturated and the phreatic surface is as shown in the slope stability cross-section (attached).

3. The soils drain rapidly and excess pore pressures do not develop in response to strains and stress changes. Consequently, the pore pressure parameter in the stability analysis is 0.

4. The location of bedrock is as shown in the slope stability cross-section (attached). It is also assumed that the failure surfaces for the reclamation fill will not intersect the bedrock.

5. The reclaimed slopes are properly vegetated and maintained to reduce the potential for surface erosion.

6. Based on the reclamation plan and the available topographic information, the worst-case reclamation slope is at the location shown in Figure 1.

Based on the results of the slope stability analyses, the worst-case reclamation slope is stable with a critical safety factor of 1.4 under static conditions. Results of the stability analyses are attached.

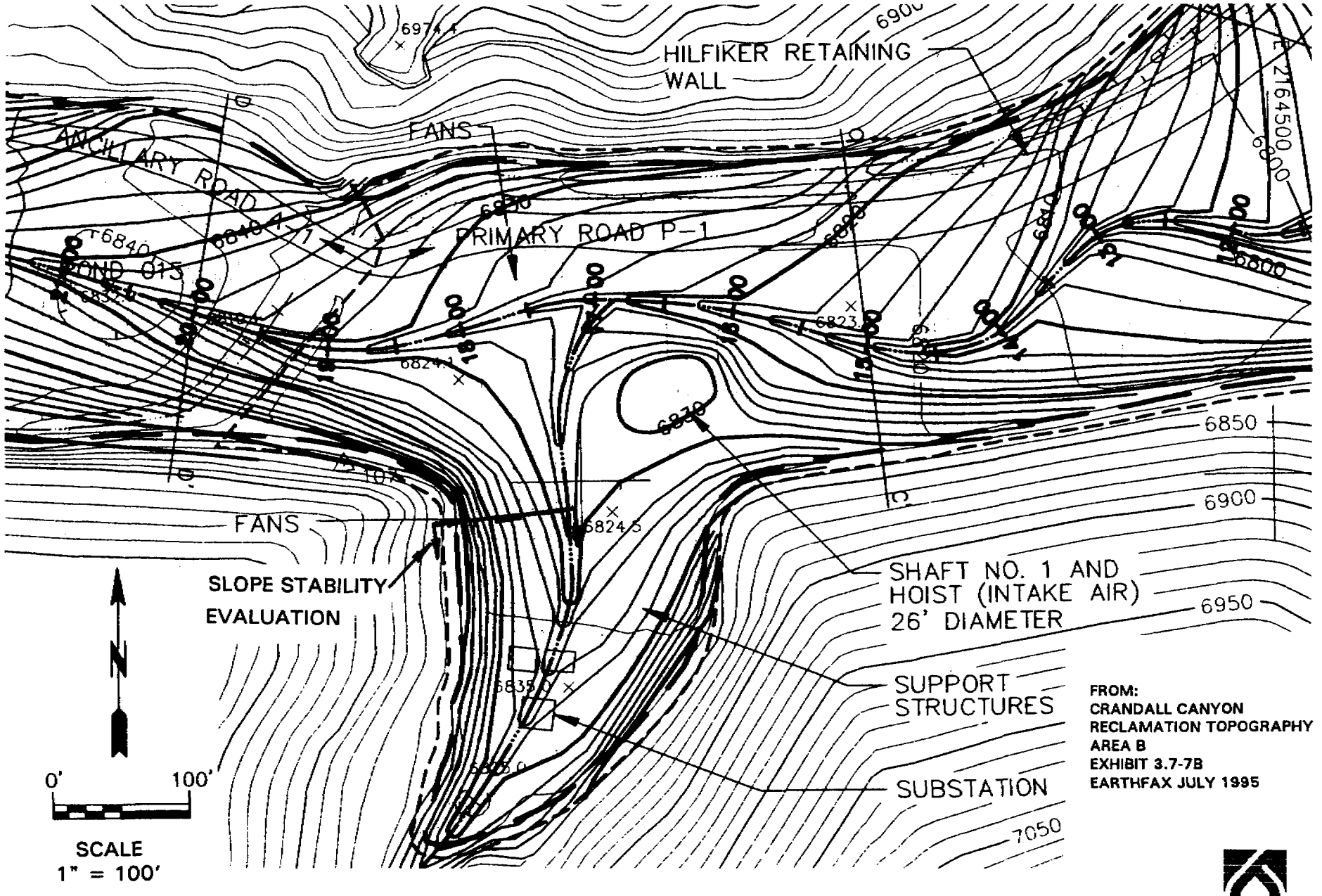

FIGURE 1. SITE MAP AND LOCATION OF CROSS-SECTION FOR THE SLOPE STABILITY EVALUATION.

EarthFax

Bishop Circular Surfaces – Most Critical Surfaces

Minimum Factor of Safety : 1.408

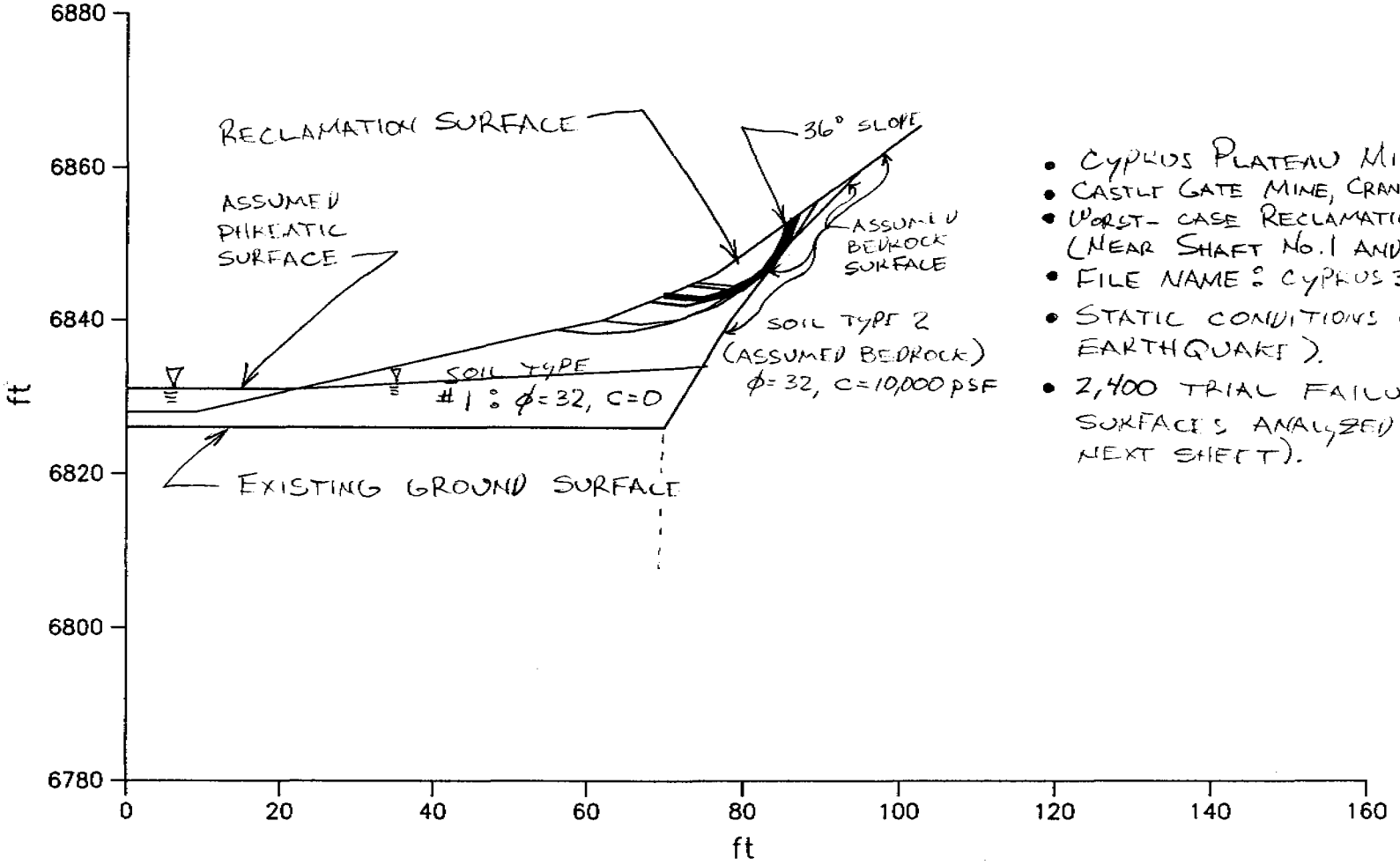

- CYPRUS PLATEAU MINING CORP.
- CASTLE GATE MINE, CRANDALL CANYON
- WORST-CASE RECLAMATION SLOPE (NEAR SHAFT No. 1 AND FANS)
- FILE NAME : CYPRUS32.DAT
- STATIC CONDITIONS (NO EARTHQUAKE).
- 2,400 TRIAL FAILURE SURFACES ANALYZED (SEE NEXT SHEET).

Bishop Circular Surfaces – Search for Critical Surfaces

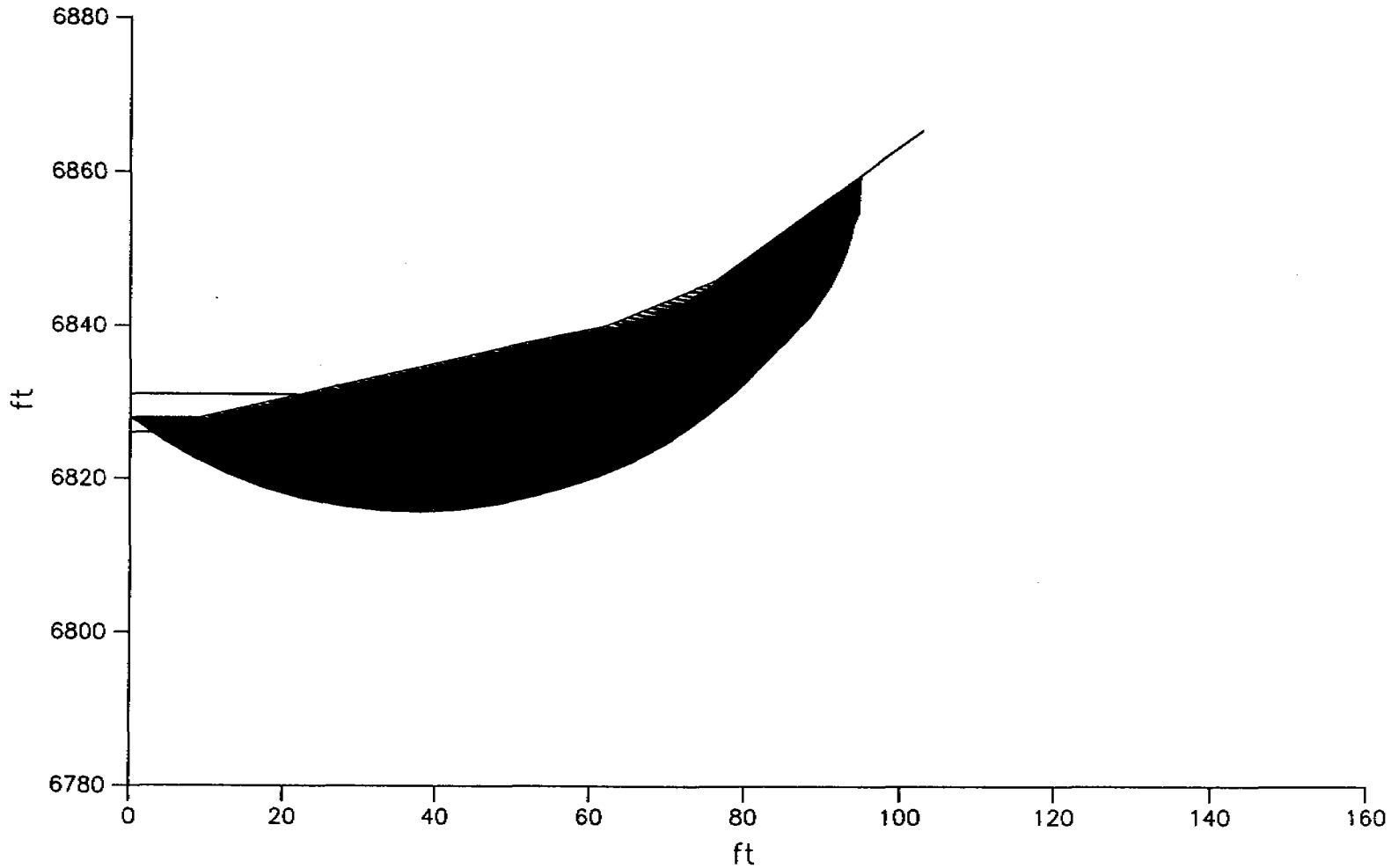

```
TITLE
CYPRUS PLATEAU MINING CORPORATION
RECLAMATION SLOPE STABILITY ANALYSIS
WORST-CASE SLOPE NEAR THE MINING FACILITIES
PROFIL
9 5
0 6828 9 6828 1
9 6828 52.5 6838 1
52.5 6838 62 6840 1
62 6840 76.5 6846 1
76.5 6846 103 6865.5 1
0 6826 70 6826 1
70 6826 78.5 6840 2
78.5 6840 86 6850 2
86 6850 95 6859.5 2
SOIL
2
115 135 0 32 0 0 1
135 150 10000 32 0 0 1
WATER
1 62.4
3
0 6831
22 6831
75.5 6834
CIRCL2
80 30 0 79 80 95 6800 5 -5 -35
END
```

```
*****************************************************************
*****                    GeoSlope                           *****
*****                  Version 5.00                         *****
*****                                                       *****
*****          (c)1992 by GEOCOMP Corp, Concord, MA         *****
*****            Licensed to EarthFax Engineering           *****
*****************************************************************
```

Problem Title: CYPRUS PLATEAU MINING CORPORATION
Description: RECLAMATION SLOPE STABILITY ANALYSIS
Remarks: WORST-CASE SLOPE NEAR THE MINING FACILITIES

```
*****************************************************************
*****                    INPUT DATA                         *****
*****************************************************************
```

Profile Boundaries

Number of Boundaries: 9
Number of Top Boundaries: 5

Boundary No.	X-Left (ft)	Y-Left (ft)	X-Right (ft)	Y-Right (ft)	Soil Type Below Bnd
1	0.00	6828.00	9.00	6828.00	1
2	9.00	6828.00	52.50	6838.00	1
3	52.50	6838.00	62.00	6840.00	1
4	62.00	6840.00	76.50	6846.00	1
5	76.50	6846.00	103.00	6865.50	1
6	0.00	6826.00	70.00	6826.00	1
7	70.00	6826.00	78.50	6840.00	2
8	78.50	6840.00	86.00	6850.00	2
9	86.00	6850.00	95.00	6859.50	2

Soil Parameters

Number of Soil Types: 2

Soil Type No.	Total Unit Wt. (pcf)	Saturated Unit Wt. (pcf)	Cohesion Intercept (psf)	Friction Angle (deg)	Pore Pressure Param.	Pressure Constant (psf)	Piez. Surface No.
1	115.0	135.0	0.0	32.0	0.00	0.0	1
2	135.0	150.0	10000.0	32.0	0.00	0.0	1

Piezometric Surfaces

Number of Surfaces:	1
Unit Weight of Water:	62.40 pcf

Piezometric Surface No.:	1
Number of Coordinate Points:	3

Point No.	X-Water (ft)	Y-Water (ft)
1	0.00	6831.00
2	22.00	6831.00
3	75.50	6834.00

****
***** TRIAL SURFACE GENERATION *****
****

Data for Generating Circular Surfaces

Number of Initiation Points:	80
Number of Surfaces From Each Point:	30
Left Initiation Point:	0.00 ft
Right Initiation Point:	79.00 ft
Left Termination Point:	80.00 ft
Right Termination Point:	95.00 ft
Minimum Elevation:	6800.00 ft
Segment Length:	5.00 ft
Positive Angle Limit:	-5.00 deg
Negative Angle Limit:	-35.00 deg

****
***** RESULTS *****
****

Critical Surfaces

No.	Safety Factor	Center X (ft)	Center Y (ft)	Circle Radius (ft)
1	1.408	73.89	6855.77	13.05
2	1.419	61.41	6869.91	31.64
3	1.428	77.29	6853.90	9.52
4	1.432	73.74	6855.03	12.30
5	1.432	77.28	6853.75	9.37
6	1.433	71.98	6856.53	14.60
7	1.437	76.47	6853.90	9.97
8	1.450	73.94	6854.92	12.26
9	1.452	66.71	6861.66	22.17
10	1.455	72.06	6856.10	14.21

BACKGROUND INFORMATION

The purpose of this project is to estimate the angle of repose of the reclamation fill material for the Cyprus Plateau Mining Corporation at the Castle Gate Mine in Crandall Canyon. Crandall Canyon is located in Carbon County, Utah. According to regulations promulgated by the Utah Division of Oil, Gas, and Mining ("UDOGM", R645-301-553.130), reclamation slopes shall not exceed the angle of repose and shall have a minimum long-term static safety factor of greater than 1.3.

SOILS INFORMATION

The angle of repose of any soil is a function of the soil gradation, moisture content, and degree of compaction. It is expected that the reclamation fill will be fairly dry and will be placed without the benefit of compaction or moisture conditioning.

According to the soil sampling program conducted by EarthFax (1995a), residual and overburden soils at the Castle Gate Mine generally consist of sandy loam to loamy sand with 5 to 15% clay and 5 to 75% rock (gravel through boulders). Because of the variability in the soil texture, the angle of repose of the soil will also vary.

The angle of repose of a loose sand generally varies between 30 and 35 degrees (Holtz and Kovacs, 1981). According to Tomlinson (1986), the angle of repose for loose, dry sand can vary from 28.5 degrees for round uniform sand grains to 34 degrees for angular well-graded sand grains. Increasing the density of the sand can increase the angle of repose to 33 to 46 degrees, respectively. According to Bowles (1984), unsaturated, nonplastic remolded and undisturbed soils can have an angle of repose between 34 and 36 degrees.

CONCLUSIONS AND RECOMMENDATIONS

Based on the reclamation plan prepared by EarthFax (1995b), the proposed reclamation topography has a maximum slope of approximately 36 degrees (1.4 horizontal to 1 vertical). It is recommended that the reclamation slopes not exceed 36 degrees, although some sloughing of surface soils may occur on slopes up to 36 degrees, especially as the soils dry or if the soils are placed in a loose condition.

REFERENCES

Bowles, J. E. 1984. Physical and Geotechnical Properties of Soils. McGraw-Hill, New York, New York.

EarthFax Engineering, Inc. 1995a. Letter to Johnny Pappas at the Cyprus Plateau Mining Corporation dated June 1, 1995. Midvale, Utah.

EarthFax Engineering, Inc. 1995b. Crandall Canyon, Reclamation Topography, Area B. Exhibit 3.7-7B. Reclamation topographic map dated July, 1995. Midvale, Utah.

Holtz, R. H. and W. K. Kovacs. 1981. An Introduction to Geotechnical Engineering. Prentice Hall, Englewood Cliffs, New Jersey.

Tomlinson, M. J. 1986. Foundation Design and Construction. Longman Scientific & Technical. Essex, England.

APPENDIX 3.7S

CRANDALL CANYON SOIL SAMPLING RESULTS

REGISTERED PROFESSIONAL ENGINEER
No. 7102
RICHARD B. WHITE
9/15/95
STATE OF UTAH

Certification valid on 3/14/96.

September 15, 1995

EarthFax

EarthFax
Engineering Inc.
Engineers/Scientists
7324 So. Union Park Ave.
Suite 100
Midvale, Utah 84047
Telephone 801-561-1555
Fax 801-561-1861

Mr. Johnny Pappas
Environmental Engineer
Cyprus Plateau Mining Corporation
P.O. Box PMC
Price, Utah 84501

Subject: Soil Sampling Program in Crandall Canyon
Castle Gate Mine, ACT/007/004
Carbon County, Utah

Dear Johnny:

Herewith is a letter report detailing the evaluation of overburden in Crandall Canyon in accordance with requirements of the approved reclamation plan for Crandall Canyon, Carbon County, Utah.

Introduction

EarthFax Engineering conducted an overburden evaluation, including topsoil and potential alternate topsoil, in Crandall Canyon on April 5, and 6, 1995. The sampling was conducted in accordance with a sampling plan submitted to Mr. Henry Sower on December 29 1994, and as amended on January 24, 1995. The sampling plan was developed with three main objectives in mind:

1). To collect representative samples from previously removed topsoil, currently stockpiled at two locations near the mouth of Crandall Canyon. Analytical data obtained in the process will aid in the determination of amendments, if any, that may need to be added to the topsoil to sustain vegetative cover in accordance with R645-302-350.

2). To identify and characterize the existing canyon bottom overburden within the disturbed area boundary, and identify areas, if any, that may be of concern during final reclamation.

3). To assess the potential of using existing overburden/soil admixture above the upper sediment retention pond as a substitute topsoil.

Departures from the approved sampling plan were sanctioned on site by Mr. Sower, and included, (1) not compositing samples from similar depth increments in adjacent soil pits due to spatial variability in physico-chemical characteristics of the soil, and (2) collecting fewer samples from each pit, due to a lack of soil profile development.

Sample Collection

Seven soil pits were excavated using a backhoe to evaluate topsoil and alternate topsoil conditions in Crandall Canyon (Figure 1). Additionally, topsoil stockpiled at the mouth of Crandall Canyon was sampled, using a hand auger, at locations shown in Figure 2. Soil pits

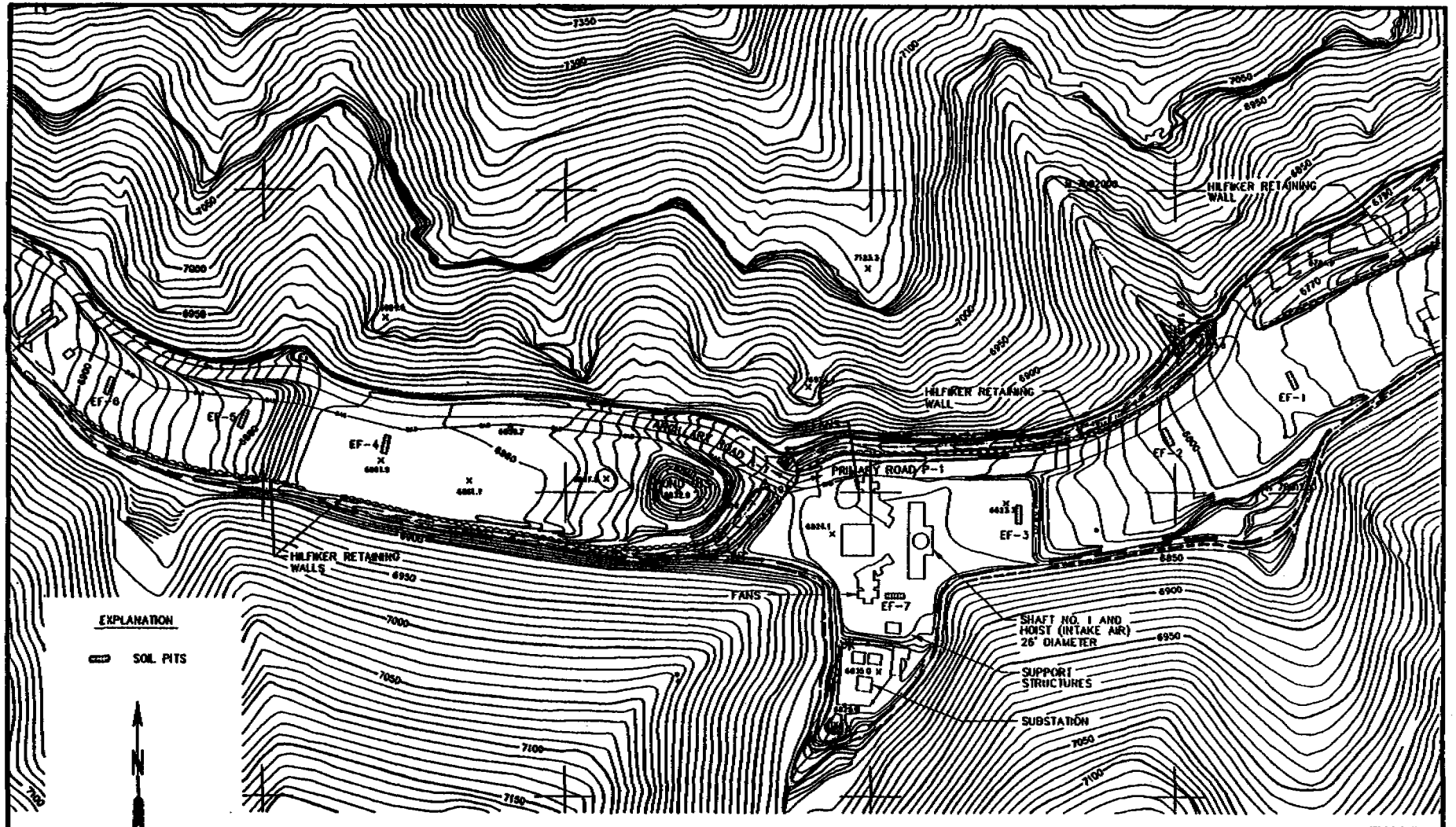

FIGURE 1. TOPSOIL AND ALTERNATE TOPSOIL SAMPLE PITS

EarthFax

GURE 2

STOCKPILED SOIL SAMPLE LOCATIONS

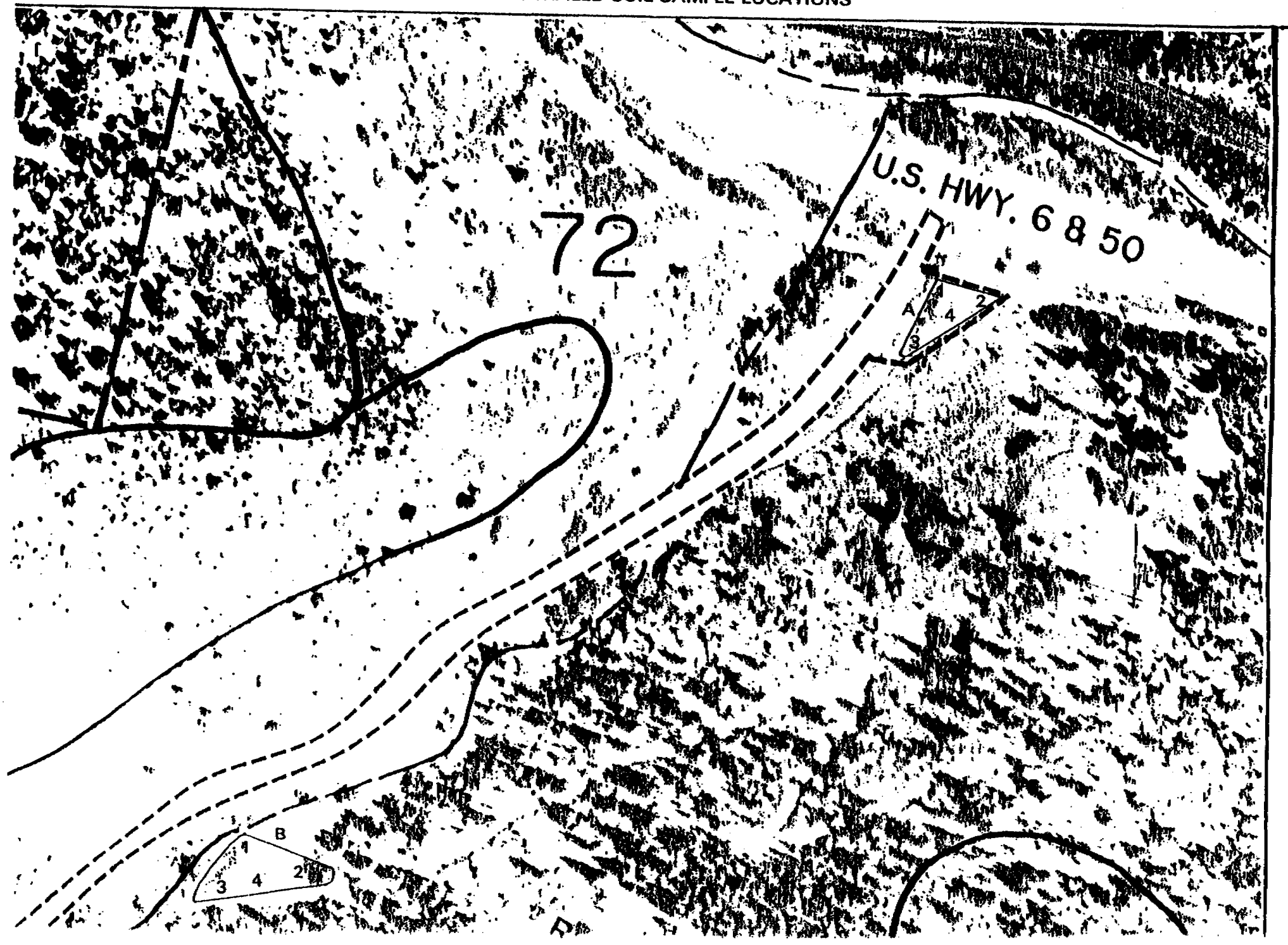

EF-4, EF-5, and EF-6 were excavated to a depth of approximately eight feet to enable a characterization of the inherent properties of each soil type, and to assess the potential for using the material as an alternate topsoil in the lower reaches of the canyon. Soil pits EF-1, EF-2, EF-3, and EF-7 were excavated to a depth of four feet and samples were collected to determine the acid/base potential, and toxic-forming potential of the soils. Sample intervals are shown in Table 1A.

The topsoil in stockpiles A and B (Figure 2) was sampled to determine whether stockpiling has had any deleterious effect on the nutrient capacity of the soil. Samples were collected to a total depth of eight feet from four locations at each stockpile (Table 1B).

In addition to collecting soil samples, EarthFax personnel completed detailed soil logs of EF-1 through EF-7 (Appendix A).

Soils Descriptions

The dominant soil types on the undisturbed slopes adjacent to the operational facilities in Crandall Canyon are Pathead and Comodore on the upper slopes, and Datino Variant on the lower slopes. Soils on the bottom of Crandall Canyon prior to construction of the mine facilities were identified as belonging to the Shupert and Winetti mapping units (Soil Conservation Service, 1991). During earth moving operations in the canyon, soils from the Pathead and Comodore families, as well as Datino variant were excavated from valley slopes and used to construct the facility pads along the canyon bottom. Additionally, soil material was excavated from the shaft and placed on the lower pad area near pits EF-1, EF-2, and EF-3 (Figure 1). This material, designated as "made land" on submittals included in the reclamation plan, has had insufficient time to develop vertical stratification typical of most soils, and discrete horizons are generally absent. However, an incipient illuvial "clay" layer has started to develop between 3 and 16 inches within soils west of the ventilation shaft (EF-4 and EF-5).

Soil Pit EF-1 is located toward the lower (eastern) end of the lower pad area in Crandall Canyon (Figure 1). Vegetation is generally absent to poor, and consists of sparse grasses. The soil is rocky, and consists of shale and sandstone debris excavated during shaft construction. Coal debris was discovered in the bottom of the soil pit. Upward migration of organic acids, due to capillarity, has resulted in a discolored alteration front above the coal debris. The soil is well drained on an east facing slope of about 2 percent. Roots penetrate to 10 inches, erosion is slight and permeability is moderate. Minor surface scarification is evident in a direction parallel to the slope.

Soil Profile

0-22" - dark gray (10YR 4/1) sandy loam with about 10 percent clay; massive; hard, friable, nonsticky, nonplastic; moderate effervescence with acid (pH 8.0); abrupt lower boundary. Soil contains about 60 percent coarse fragments, of which one third are angular boulders up to 18 inches in length.

22-30" - dark brown (10YR 4/3) sandy loam with about 10 percent clay; massive; medium, friable, non-plastic; moderate effervescence with acid (pH 8.1); gradational undulating lower boundary. Soil contains about 30 percent coarse fragments, of which about half are angular boulders up to 18 inches in length. Iron oxide staining evident as alteration front above coal debris.

30-48" - very dark gray (10YR 3/1) loamy sand with about 5 percent clay, and abundant coal fines; massive; friable, non-plastic; no effervescence. Soil contains about 60 percent coarse fragments, of which most are angular shale and sandstone debris up to twelve inches in length.

Soil Pit EF-2 is located in the middle of the lower pad area in Crandall Canyon (Figure 1). Vegetation is generally absent to very sparse, and where present, it consists of grasses. The soil is rocky, and consists of shale and sandstone debris excavated during shaft construction. The soil is well drained on an east facing slope of about 3 percent. Roots penetrate to 18 inches, erosion is slight and permeability is moderate. Surface layer contains minor coal debris and large angular shale fragments. Strong salt efflorescence is evident at a depth of 24 inches. Minor surface scarification is evident in a direction parallel to the slope.

Soil Profile

0-24" - dark grayish brown (2.5Y 4/2) sandy loam with about 10 percent clay; massive; hard, friable, non-plastic; violent effervescence with acid (pH 7.7); abrupt, distinct lower boundary. Soil contains about 40 percent coarse fragments, of which 5 percent are coal, and about one quarter are angular boulders up to 16 inches in length.

24-48" - light yellowish brown (2.5Y 6/3) loamy sand with very minor clay; massive to granular; medium, very friable, non-plastic; moderate effervescence with acid (pH 8.1); salt efflorescence evident from shale fragments upon drying of profile (1 to 2 hours). Soil contains about 70 percent coarse fragments, of which 10 percent are angular boulders, and about 80 percent are sub-rounded pebbles.

Soil Pit EF-3 is located on the pad immediately east of the ventilation headframe in Crandall Canyon (Figure 1). Vegetation is absent. The soil is rocky, and densely packed due to use as a parking area. Soil is moderately well drained, and occurs on a flat-lying made land pad.

Roots penetrate to 36 inches, erosion is absent and permeability is moderate. Coal fragments, and shale and sandstone debris occur throughout profile.

Soil Profile

0-6" - dark grayish brown (10YR 4/2) sandy loam with about 10 percent clay; weak, sub-angular, granular; medium, very friable; moderate to strong effervescence with acid (pH 7.9); gradational lower boundary; weakly developed elluvial horizon evident. Soil consists of about 15 percent sub-rounded to sub-angular pebbles.

6-12" - dark grayish brown (10YR 4/2) sandy loam with about 15 percent clay; weak, platy; soft, friable; moderate effervescence with acid (pH 8.0); weakly developed illuvial horizon. Soil consists of about 40 percent angular shale and sandstone shaft debris up to 16 inches in length.

12-48" - dark grayish brown (10YR 4/2) sandy loam with about 10 percent clay; weak, sub-angular blocky; brittle, hard, friable; moderate effervescence with acid (pH 8.0). Soil consists of about 40 percent coarse fragments, most of which are angular shale and sandstone shaft debris as above.

Soil Pit EF-4 is located west of sediment pond 015 on the middle made land pad west of ventilation headframe in Crandall Canyon (Figure 1). Vegetation is moderately well established, and consists of grasses and sage brush. Soil is consistently rocky (30 percent) throughout the profile. However, minor clay accumulation is evident (illuvial layers) between 3 and 14 inches, and at a depth of about 4 feet. The soil is well drained on a flat-lying made land area. Roots penetrate to 30 inches, and surface erosion is absent. The soil pit was excavated to 8 feet to evaluate using the deeper material as alternate top soil on the lower pad.

Soil Profile

0-14" - very dark grayish brown (2.5Y 3/2) sandy loam with about 10 percent clay; moderate, sub-angular, blocky; friable, non-plastic (gradational change to slightly plastic between 6-14"); strong effervescence with acid (pH 7.9); abrupt lower boundary, with decrease in illuvial clay, and an increase in gravel component. Soil consists of about 40 percent coarse fragments, of which most are sub-angular to sub-rounded cobbles (1-4").

14-48" light olive brown (2.5Y 5/4) sandy loam with about 10 percent clay; weak sub-angular crumby; soft, friable, non-plastic; moderate effervescence with acid (pH 8.1); abrupt lower boundary with sharp increase in illuvial clay. Soil consists of about 40 percent sub-rounded gravel.

48-52" - dark brown (10YR 4/3) sandy loam with about 20 percent clay; weak ,platy; medium, slightly plastic; strong effervescence (pH 8.1). Illuvial accumulation of clay, similar to 6-14" above.

52-96" - dark brown (10YR 4/3) sandy loam with about 10 percent clay; weak, massive; very friable, non-plastic; moderate effervescence (pH 8.2). Soil consists of 35 percent coarse fragments, of which most are sub-angular boulders up to 16 inches in length.

Soil Pit EF-5 is located at the eastern end of the upper pad in Crandall Canyon (Figure 1). Vegetation is moderately well established, and consists of grasses and sage brush. A buried organic layer occurs at 30-35 inches with abundant buried roots and branches. The profile is distinctly less rocky than that in EF-4, with the exception of the interval between 30 and 35 inches, which is similar to EF-4. Roots penetrate to 40 inches, with a dense mat of grass roots penetrating to 10 inches. The soil pit was excavated to 8 feet to evaluate using the deeper material as alternate top soil on the lower pad.

Soil Profile

0-6" - olive brown (2.5Y 4/3) sandy loam with about 6 percent clay; weak, massive; very friable, non-plastic; moderate reaction with acid (pH 8.0); elluvial layer; dense grass root mats. There is a conspicuous absence of coarse fragments.

6-14" - very dark grayish brown (2.5Y 3/2) sandy loam with about 12 percent clay; weak, sub-angular platy to granular; weak, very friable, slightly plastic; moderate reaction with acid (pH 8.0); weak illuvial accumulation of clay. Soil consists of 30 percent coarse fragments, most of which are sub-rounded gravel.

14-30" - light olive brown (2.5Y 5/3) sandy loam with about 10 percent clay; weak granular; friable, non-plastic. Soil consists of about 65 percent coarse fragments, of which most are sub-rounded to sub-angular boulders up to 12 inches in length.

30-35" - very dark grayish brown (10YR 3/2) sandy loam with about 11 percent clay; massive; weak, friable, non-plastic; strong reaction with acid (pH 7.9); buried "O"-horizon with minor woody debris. No coarse fragments.

35-54" - light olive brown (2.5Y 5/3) sandy loam with about 10 percent clay; massive; weak, friable, non-plastic; strong reaction with acid; minor gravel.

54-72" - mottled light olive brown (2.5Y 5/3) and brown (10YR 5/3) sandy loam with about 10 percent clay; massive; weak, friable, non-plastic; moderate reaction with acid (pH 8.0). Soil consists of about 30 percent coarse fragments, most of which are minus 4-inch gravel and pebbles.

72-90" - light olive brown (2.5Y 5/3) with about 13 percent clay; massive; weak, friable, non-plastic; moderate reaction with acid (pH 8.2). Soil consists of about 50 percent coarse fragments, of which about half are large, sub-angular boulders up to 24 inches in length.

Soil Pit EF-6 is located at the eastern end of upper made land pad, adjacent to the natural gas storage tanks in Crandall Canyon (Figure 1). Vegetation is moderately well established, and consists of grasses and sage brush. The soil is well drained on an east facing slope of about 2 percent. Roots penetrate to 36 inches, erosion is absent and permeability is moderate. The soil pit was excavated to 8 feet to evaluate using the deeper material as alternate top soil on the lower pad

Soil Profile

0-16" - brown (10YR 5/3) sandy loam with about 15 percent clay; weak, sub-angular blocky; weak, friable, slightly plastic; moderate effervescence with acid (pH 8.0); gradational lower boundary with increase in coarse fragments, and minor increase in clay. Soil consists of about 20 percent coarse fragments, most of which are sub-angular boulders.

16-30" - very dark grayish brown (10YR 3/2) sandy loam with about 15 percent clay; moderate, sub-angular, blocky; weak, friable, slightly plastic; moderate effervescence with acid (pH 7.9); abrupt lower boundary. Soil consists of about 35 percent coarse fragments, of which 90 percent are sub-angular boulders. Horizon has appearance of buried "O" horizon in EF-4, but is not as distinct.

30-48" - light olive brown (2.5Y 5/3) loamy sand with about 5 percent clay; weak granular; loose, very friable, non-plastic; strong effervescence with acid (pH 8.0); thin illuvial horizon at 48". Soil consists of about 60 percent coarse fragments, most of which is gravel, with minor sub-angular boulders up to 18 inches in length.

48-60" - light olive brown (2.5Y 5/3) loamy sand with minor clay and silt ; massive; weak, friable, non-plastic. Soil consists mostly of coarse sand, and appears to be an incipient elluvial layer, with gradational lower boundary.

60-66" - light olive brown (2.5Y 5/3) loam with about 15 percent clay and 40 percent silt; moderate, platy; slightly hard, friable, slightly plastic; strong effervescence with acid (pH 8.1). Incipient illuvial layer with abrupt lower boundary.

66-96" - light olive brown (2.5Y 5/3) sandy loam with 8 percent clay; massive; weak, friable, non-plastic; strong effervescence with acid (pH 8.1). Soil consists of 20 percent coarse fragments, half of which are sub-angular boulders up to 18 inches in length, and half are sub-rounded cobbles.

Soil Pit EF-7 is located immediately south of the ventilation facility, adjacent to a series of partially buried concrete pads (Figure 1). The soil is comprised of debris excavated during shaft construction, and compacted for use as a parking/loading area. Hydrocarbon stained soils were discovered along the southwestern edge of the soil pit. Vegetation is absent in the vicinity of the pit. The soil is on flat-lying made land, exhibits iron oxide mottling, and appears to be poorly drained. No surface erosion is evident. Area of hydrocarbon staining is clay-rich (about 30 percent clay fraction). The hydrocarbon stained soils will be removed prior to the start of reclamation activities.

Soil Profile

0-18" - dark brown (10YR 4/3) sandy loam with about 12 percent clay; weak granular; friable, non-plastic; strong effervescence with acid (pH 8.1). Soil consists of about 35 percent coarse fragments, most of which is angular gravel.

18-30" - dark grayish brown (10YR 4/2) sandy loam with about 10 percent clay; weak to moderate, sub-angular, blocky; friable, non-plastic; moderate effervescence with acid (pH 8.0). Soil consists of about 30 percent cobbles with minor iron oxide coating. Soil exhibits yellowish red (5YR 4/6) iron oxide mottles.

30-48" - dark grayish brown (10YR 4/2) sandy loam with about 15 percent clay; weak to moderate, sub-angular, blocky; friable, non-plastic; moderate effervescence with acid (pH 8.1). Soil consists of about 15 percent coarse fragments, of which the majority are angular boulders to 16 inches. This layer is an apparent incipient illuvial layer.

Topsoil is located in two stockpiles near the mouth of Crandall Canyon (Figure 2). The soil is comprised of topsoil removed during construction of the mine facilities, and is stockpiled to a depth of 12 feet (Stockpile A). The soils are more physico-chemically homogeneous than the overburden discussed above, and are described as follows: dark brown (7.5YR 4/2) to very dark grayish brown (10YR 3/3) sandy loam with about 13 percent clay; weak, granular; loose, friable, nonplastic; strong effervescence with acid (pH 7.8). The soil consists of up to about 13 percent coarse fragments, mostly sub-rounded to sub-angular, sandstone and shale pebbles to 1 inch.

Analytical Results

Analytical data are summarized in Table 2, and are included in full in Appendix B. Overburden in Crandall canyon exhibits a wide range of chemical properties, and varies in texture from loamy sand to loam. The soil characteristics fall within Division criteria for overburden in the vegetative root zone (Leatherwood and Duce, 1988) with two exceptions: the percent rock fragments and selenium present in sample EF-1-3 at a concentration of 0.11 mg/kg. A concentration of selenium in the vegetative root zone greater than 0.1 mg/kg is unacceptable. The soil pH ranged from 7.7 to 8.2, with an average of 8.0 for the site. The electrical conductivity of the soils ranged from 101 to 490 umhos/cm, and averaged 209 umhos/cm, and the saturation percentage ranged from 23.2 to 36.2. The sodium absorption ratio

("SAR") ranged from 0.01 to 0.79, while exchangeable sodium was in the range 8 to 22 meq/100g. The acid-base potential was in the range 92 to 947 tons $CaCO_3$/1,000 tons material. The percentage rock fragments within the overburden was highly variable, and was in the range 0 to 73 percent, with an average of 34 percent.

Analytical data for the stockpiled topsoil, included in Table 2, show that the pH is 7.8, and the electrical conductivity is in the range 163 to 329 umhos/cm. Phosphorus ranges from below detection (2 mg/kg) to 10 mg/kg, whereas, potassium is in the range 31 to 90 mg/kg. Nitrate nitrogen is in the range 2.7 to 15.5 mg/kg, and the SAR ranges from 0.03 to 0.06. Further, there is no indication that stockpiling has led to the development of anaerobic conditions in the soils.

It is important to note that the analysis methods used by the laboratory (Chemtech) to determine pH, electrical conductivity, soluble calcium, magnesium, and sodium, total nitrogen, and total organic carbon were not those recommended in Table 6 of the "Guidelines for Topsoil and Overburden Management". These parameters were determined using an EPA accepted laboratory method that allows for the use of soil sample extracts at soil/water ratios of 1:5. The Division guidelines recommend using approved ASA methods that require the use of saturated soil pastes. As described by Page (1982, page 168), though the paste extraction method is recommended for soil analyses used to determine soil characteristics and will provide more accurate results, the extracts of soil/water ratio of 1:5 can be used. Since the methods for analysis of the parameters listed in Table 6 of the guidelines are "recommended" but not required, the results of the analyses reported in the soil evaluation plan will be used to preliminarily determine the suitability and quantity of the soils in Crandall Canyon to be used as substitute topsoil.

Site Photographs (Plates 1 through 6)

Photographs (Plates 1 through 6) showing soil pit locations, typical soil profiles, and depicting selected features of soil and vegetation in Crandall Canyon are included in Appendix C. Plate 1 shows moderately well established vegetation on the upper made land pad, with the ventilation shaft in the background. Soil pits EF-4, EF-5, and EF-6 were located in this general area (Figure 1). Plate 2 shows the soil profile in EF-4, which is typical of most soil profiles observed in this study. Note the relative rockiness of the soil, and incipient illuvial layer between 48 and 52 inches. This layer generally occurred higher in the profile (between 16 and 24 inches), and was poorly developed. Plate 3 shows buried organic material in EF-5. This horizon, not present in other soil pits, showed minor elevated nitrogen and organic carbon. The organic detritus probably came from adjacent, slope forest floor organic material that was incorporated during construction of the made land pads. Plate 4 shows the lower made land pad with the ventilation shaft in the background. Soil pit EF-7 was located immediately to the south (left) of the shaft infrastructure. Plate 5 shows the lower made land pad, which consists predominantly of material excavated during shaft construction. Note the increased rockiness over the upper made land pad (Plate 1), and general absence of vegetation. However, these phenomena can be easily remedied as discussed below. Plate

6 shows minor salt efflorescence in soil pit EF-2. The effervescent soils exhibited only minor elevated cation concentrations, and sodicity and the SAR were within the normal range of Crandall Canyon soils.

Conclusions

No acid- or toxic-forming materials were found to exist in soils within Crandall Canyon. Analytical data indicate that Crandall Canyon soils chemistry falls within the acceptable range according to Division guidelines for soil and overburden with the exception of results from sample EF-1-3 taken from test pit EF-1. Selenium was detected in the soil in this test pit at a depth of 2.5' below ground surface and directly above buried coal fines. Because of the presence of coal fines and since the soils in this area will be excavated as part of the current channel reclamation plans, the soils in this area will not be used as substitute topsoil. Instead, these soils and coal fines will be moved to a location that will receive a minimum of four feet of cover. The areal extent of the coal fines is unknown at this time.

The excessive rockiness of the soils in the test pits may prevent adequate root penetration to a depth of four feet. In mitigation, roots were only rarely seen to penetrate below 36 inches in the soil pits of the upper made land pad, and in most cases, were observed to penetrate to a depth of about 24 inches. Additionally, the dominant vegetation is grass, and predominant root pattern one of a dense mat of shallow (less than 10 inches) dendritic roots. Vegetation has re-established with moderate success in these areas, and does not appear to be inhibited by the slightly rocky soils.

The Division will sometimes permit the use of soils with excessive rockiness (Henry Sower, oral commun., April 5, 1995) in the event that all other parameters meet Division requirements. In the case that the rocky soils on the lower pad, with an average rock fragment content of 57 percent (Table 1), are excluded from use, soil from the middle and upper pads, with an average rock fragment content of 32 percent (Table 1), could be used as an alternate topsoil. Additionally, the absence of vegetation can be corrected by improved physical and chemical soil treatment. This will include discing, and scarifying parallel to slope contours, and amendment application after final reclamation grading, as is outlined in the final reclamation plan.

Chemical analyses of the stockpiled topsoil indicate that amendments may be required for successful re-establishment of the seed mix recommended in Chapter 9 of the reclamation plan (species list #1). Amendments, as shown in Appendix D, should be added in the following proportions for non-irrigated soils:

N, lbs/ac.	40 - 70
P_2O_5, lbs/ac.	50 - 70
K_2O, lbs/ac.	100-120

We appreciate the opportunity to provide you with this report. Please don't hesitate to contact me if you have any further questions.

Sincerely yours,

Chris D. Hansen for

David McMillan
Geochemist

References:

Page, A.L., et.al. 1982. Methods of Soil Analysis, Part 2 Chemical and Microbiological Properties, 2nd Edition. American Society of Agronomy, Inc. and Soil Science Society of America. Madison, Wisconsin.

State of Utah. Division of Oil, Gas and Mining. 1988. Guidelines for Management of Topsoil and Overburden for Underground and Surface Coal Mining. Department of Natural Resources. Salt Lake City, Utah.

TABLE 1A.

OVERBURDEN SAMPLES

Soil Pit No.	Depth	Soil Sample No.	Analyses
EF-1	0-22"	EF-1-1[a]	Table 6[b]
EF-1	22-30"	EF-1-2	Table 6
EF-1	30-48"	EF-1-3	Table 6
EF-2	0-6"	EF-2-1	Table 6
EF-2	6-24"	EF-2-2	Table 6
EF-2	24-48"	EF-2-3	Table 6
EF-3	0-6	EF-3-1	Table 6
EF-3	6-12"	EF-3-2	Table 6
EF-3	18-48"	EF-3-3	Table 6
EF-4	0-6"	EF-4-1	Table 6
EF-4	6-14"	EF-4-2	Table 6
EF-4	14-48"	EF-4-3	Table 6
EF-4	60-72"	EF-4-4	Table 6
EF-4	84-96"	EF-4-5	Table 6
EF-5	0-14"	EF-5-1	Table 6
EF-5	14-30"	EF-5-2	Table 6
EF-5	30-35"	EF-5-3	Table 6
EF-5	54-66"	EF-5-4	Table 6

Soil Pit No.	Depth	Soil Sample No.	Analyses
EF-5	78-90"	EF-5-5	Table 6
EF-6	0-16"	EF-6-1	Table 6
EF-6	16-30"	EF-6-2	Table 6
EF-6	30-48"	EF-6-3	Table 6
EF-6	60-72"	EF-6-4	Table 6
EF-6	84-96"	EF-6-5	Table 6
EF-7	0-6"	EF-7-1	Table 6
EF-7	6-12"	EF-7-2	Table 6
EF-7	18-24"	EF-7-3	Table 6
EF-7	30-36"	EF-7-4	Table 6
EF-7	42-48"	EF-7-5	Table 6

(a) EF-1-1 - Overburden discrete sample

(b) Table 6. Recommended laboratory methods for baseline soils data; in Guidelines for Management of Topsoil and Overburden for Underground and Surface Coal Mining, Leatherwood and Duce, 1988. Methods for determining saturation, sieve, exchangeable sodium, and available water capacity as recommended in Table 6. All others by EPA methods. Determination of pH, electrical conductivity, soluble Ca, Mg, and Na, and SAR based upon an extract of soil/water ratio of 1:5.

TABLE 1B.

STOCKPILED TOPSOIL SAMPLES

Composite	Stockpile	Depth	Sample No.	Analyses
TS-1	A	0-24"	2	Table 2[a][b]
	A	24-48"	3	Table 2
TS-2	A	48-60"	4	Table 2
	A	72-96"	1	Table 2
TS-3	B	0-24"	1	Table 2
	B	24-48"	4	Table 2
TS-4	B	48-72"	3	Table 2
	B	72-90"	2	Table 2

(a) Table 2 in letter to Mr. Henry Sower: Proposed Soil Sampling Program in Crandall Canyon, December 29, 1994.

(b) Table 6. Recommended laboratory methods for baseline soils data; in Guidelines for Management of Topsoil and Overburden for Underground and Surface Coal Mining, Leatherwood and Duce, 1988. Methods for determining saturation, sieve, exchangeable sodium, and available water capacity as recommended in Table 6. All others by EPA methods. Determination of pH, electrical conductivity, soluble Ca, Mg, and Na, and SAR based upon an extract of soil/water ratio of 1:5.

TABLE 2. PHYSIO-CHEMICAL PROPERTIES OF CRANDALL CANYON OVERBURDEN AND TOPSOIL

Parameter	Units	Acceptable DOGM (T.2)	Soil Abundance	TS-1	TS-2	TS-3	TS-4	EF-1-1	EF-1-2	EF-1-3	EF-2-1	EF-2-2	EF-2-3	EF-3-1	EF-3-2
pH	--	6.0-9.0		7.8	7.8	7.8	7.8	8.0	8.1	8.1	7.7	8.1	8.1	7.9	8.0
Ec	Umhos/cm	0-15,000		163	288	189	329	283	490	346	189	316	276	150	161
Saturation	%	25 - 80		(1)	(1)	(1)	(1)	35.9	32.6	36.2	33.1	33.0	31.2	31.1	30.5
Phosphorus	mg/kg		40 - 4,500	10	<2	17	<2	na	na	na	na	na	na	na	na
Potassium	mg/kg		0.19 - 6.3%	90	52	84	31	na	na	na	na	na	na	na	na
Selenium	mg/kg	<0.1	•	na	na	na	na	<0.1	<0.1	0.11	<0.1	<0.1	<0.1	<0.1	<0.1
Boron	mg/kg	<5.0		na	na	na	na	<1.0	<1.0	<1.0	<1.0	<1.0	<1.0	<1.0	<1.0
Nitrogen (Total)	mg/kg			2,300	923	752	846	926	765	5,730	1,120	422	480	960	673
Nitrate	mg/kg			2.7	15.5	4.0	14.0	3.4	2.9	1.5	1.7	3.4	2.5	6.4	1.8
Calcium	mg/kg		0.06 - 32%	317	79	633	97	110	126	236	271	112	168	410	65
Magnesium	mg/kg		0.03 - >10%	45	21	86	17	29	31	38	48	14	20	39	14
Sodium	mg/kg		0.05 - 10%	6.5	4.8	5.9	2.8	56.9	85.6	97.4	2.2	8.2	15.6	19.8	20.4
SAR (1)	--	0 - 12		0.04	0.06	0.03	0.03	0.56	0.79	0.69	0.01	0.09	0.14	0.11	0.27
Exchangeable Na	meq/100gm			na	na	na	na	11	15	8	9	13	10	16	16
Acid/Base Pot.	tons CaCO3/	> -5		na	na	na	na	465	936	458	464	927	929	931	92
Avail. H2O	%	0.05 - >0.10		na	na	na	na	21	24	26	26	27	25	23	24
Texture	--	all		sl	sl	sl	sl	sl	sl	ls	sl	ls	ls	sl	sl
Rock Frags.	%vols	Var.		13	5	8	9	67	28	57	47	70	73	24	41
Total Org. "C"	mg/kg			na	na	na	na	16900	11700	242000	57500	10200	6720	12000	10540

(1) SAR values are based on converting mg/Kg of CA, Mg, and Na to meq/l using a saturation of 500%. This was done since the Ca, Mg, and Na concentrations were determined using an extract of soil/water at a ratio of 5:1 and not an extract saturation paste as described in ASA Method 10-3.4.

TABLE 2. PHYSIO-CHEMICAL PROPERTIES OF CRANDALL CANYON OVERBURDEN AND TOPSOIL

Parameter	Units	Acceptable DOGM (T.2)	Soil Abundance	EF-3-3	EF-4-1	EF-4-2	EF-4-3	EF-4-4	EF-4-5	EF-5-1	EF-5-2	EF-5-3	EF-5-4	EF-5-5	EF-6-1	EF-6-2
pH	--	6.0-9.0		8.0	7.9	8.1	8.1	8.2	8.2	8.0	8.0	7.9	8.1	8.2	8.0	7.9
Ec	Umhos/cm	0-15,000		191	161	158	127	181	151	131	101	180	129	153	147	165
Saturation	%	25 - 80		34.1	30.6	28.1	30.1	24.9	30.3	29.5	28.3	34.5	30.3	28.5	27.9	32.8
Phosphorus	mg/kg		40 - 4,500	na	na	na	na	na	na	na	na	na	na	na	na	na
Potassium	mg/kg		0.19 - 6.3%	na	na	na	na	na	na	na	na	na	na	na	na	na
Selenium	mg/kg	<0.1		<0.1	<0.1	<0.1	<0.1	<0.1	<0.1	<0.1	<0.1	<0.1	<0.1	<0.1	<0.1	<0.1
Boron	mg/kg	<5.0		<1.0	<1.0	<1.0	<1.0	<1.0	<1.0	<1.0	<1.0	<1.0	<1.0	<1.0	<1.0	<1.0
Nitrogen (Total)	mg/kg			943	549	432	421	393	470	516	510	788	447	486	499	641
Nitrate	mg/kg			1.7	2.6	1.6	1.5	2.9	1.5	2.2	1.6	2.3	3.5	2.4	3.3	2.1
Calcium	mg/kg		0.06 - 32%	444	114	343	321	106	93	65	62	114	90	99	91	300
Magnesium	mg/kg		0.03 - >10%	46	22	50	55	32	30	12	11	29	21	26	17	70
Sodium	mg/kg		0.05 - 10%	33.4	1.5	4.7	4.6	7.8	6.0	0.8	1.3	3.7	1.9	1.9	0.8	6.7
SAR (1)	--	0 - 12		0.18	0.02	0.03	0.03	0.08	0.06	0.01	0.02	0.04	0.02	0.02	0.01	0.04
Exchangeable Na	meq/100gm			12	12	13	12	14	12	13	15	15	10	16	16	19
Acid/Base Pot.	tons CaCO3/	> -5		930	932	936	941	940	940	927	943	931	942	937	936	937
Avail. H2O	%	0.05 - >0.10		25	22	22	25	23	22	24	21	28	23	23	24	26
Texture	--	all		sl	sl	sl	sl	sl	sl	sl	sl	sl	sl	sl	sl	sl
Rock Frags.	%vols	Var.		36	42	37	36	35	33	34	67	0	33	53	18	34
Total Org. "C"	mg/kg			16100	4540	5020	3420	3680	3130	5700	2530	17800	5150	4490	3310	7300

TABLE 2. PHYSIO-CHEMICAL PROPERTIES OF CRANDALL CANYON OVERBURDEN AND TOPSOIL

Parameter	Units	Acceptable DOGM (T.2)	Soil Abundance	EF-6-3	EF-6-4	EF-6-5	EF-7-1	EF-7-2	EF-7-3	EF-7-4	EF-7-5	Avg.
pH	--	6.0-9.0		8.0	8.1	8.1	8.1	8.1	8.1	8.0	8.1	8.0
Ec	Umhos/cm	0-15,000		128	177	175	156	191	304	280	316	209
Saturation	%	25 - 80		23.2	25.9	26.7	33.5	34.0	33.3	31.0	34.0	27.1
Phosphorus	mg/kg		40 - 4,500	na	na	na	na	na	na	na	na	1
Potassium	mg/kg		0.19 - 6.3%	na	na	na	na	na	na	na	na	8
Selenium	mg/kg	<0.1		<0.1	<0.1	<0.1	<0.1	<0.1	<0.1	<0.1	<0.1	<0.1
Boron	mg/kg	<5.0		<1.0	<1.0	<1.0	<1.0	<1.0	<1.0	<1.0	<1.0	<1.0
Nitrogen (Total)	mg/kg			383	443	359	462	389	750	464	594	536
Nitrate	mg/kg			1.6	1.8	2.5	2.6	1.6	2.1	1.5	3.3	3
Calcium	mg/kg		0.06 - 32%	68	201	81	62	77	74	111	138	167
Magnesium	mg/kg		0.03 - >10%	12	45	22	10	9	11	15	20	29
Sodium	mg/kg		0.05 - 10%	3.2	7.1	4.8	1.7	11.8	9.5	8.9	13.3	13.6
SAR (1)	--	0 - 12		0.04	0.05	0.05	0.02	0.15	0.12	0.09	0.13	0.11
Exchangeable Na	meq/100gm			11	18	9	13	14	13	17	22	12
Acid/Base Pot.	tons CaCO3/	> -5		942	947	939	935	944	946	944	944	755
Avail. H2O	%	0.05 - >0.10		19	20	20	27	29	27	26	28	21
Texture	--	all		ls	l	sl	sl	sl	sl	sl	sl	0
Rock Frags.	%vols	Var.		62	22	18	38	35	31	18	7	34
Total Org. "C"	mg/kg			1340	3130	1740	5440	5530	6790	5920	5510	14701