Willow Creek Mine
Plateau Mining Corporation
C/007/038

Phase I and Phase III Bond Release Application
Preparation Plant and Refuse Pile

September 2005

LIST OF FIGURES (Continued)

Figure

3.4-6 PRIMARY ROAD P-6 TYPICAL SECTION

3.4-7 DELETED

3.4-8 DELETED

3.4-9 TYPICAL SILT FENCE

3.4-10 DELETED

3.4-11 REFUSE PILE MINING AREA AND COAL QUALITY EXPLORATION SITES

LIST OF APPENDICES

Appendix

3.4A 1978 GOLDER ASSOCIATES REPORT

3.4B EXCERPTS FROM 1977 GOLDER ASSOCIATES REPORT

3.4C 1983 HORROCKS AND CAROLLO REPORT

3.4D DESIGN OF OPERATIONAL DIVERSIONS

3.4E SEDIMENTATION POND DESIGN EVALUATION

3.4F EMBANKMENT STABILITY ANALYSIS FOR POND 011

3.4G OPERATIONAL PERIOD ALTERNATE SEDIMENT CONTROL CALCULATIONS

3.4H SLOPE STABILITY ANALYSIS

3.4I DELETED

3.4J DESIGN OF RECLAMATION DIVERSIONS

3.4K RECLAMATION PERIOD ALTERNATIVE SEDIMENT CONTROL CALCULATIONS

3.4L RECLAMATION CORRESPONDENCE, PUBLICATIONS, AND AGREEMENTS

3.4M SOIL ANALYSES

3.4N AS-BUILT RECLAMATION

LIST OF MAPS (continued)

3.4-13AB PREPARATION PLANT AREA AND REFUSE PILE AS-BUILT TOPOGRAPHY MAP

3.4-14AB PREPARATION PLANT AREA AND REFUSE PILE AS-BUILT RECLAMATION CROSS-SECTIONS

3.4-15AB PREPARATION PLANT AREA AND REFUSE PILE AS-BUILT CROSS-SECTIONS AND PROFILES

3.4-16AB PREPARATION PLANT AREA AND REFUSE PILE AS-BUILT WATERSHED MAP

3.4-17AB PREPARATION PLANT AREA AND REFUSE PILE AS-BUILT TOPOGRAPHY AND TREATMENT MAP

3.4-6 Reclamation Plan

The Preparation Plant Area and Refuse Pile were reclaimed during 2004 according to the approved reclamation plan. Final seeding for these areas occurred during the Fall of 2004. All details regarding as-built reclamation of the site can be found in Appendix 3.4N. As-built topography can be seen on Exhibit 3.4-13AB. The reclamation treatment area can be seen on Exhibit 3.4-17AB. Watershed and ditch locations can be seen on Exhibit 3.4-16AB. Cross-sections and channel profiles can be seen on Exhibits 3.4-14AB and 3.4-15AB.

3.4-6(1) Postmining Land Use

The preparation plant and refuse pile area have the potential of supporting wildlife habitat, grazing, and industrial. The reclamation plan supports both the designated pre- and postmining land uses of wildlife habitat and grazing, and the industrial use listed below.

The postmining land use for the preparation plant area is for industrial use by Price River Water Improvement District (PRWID). PRWID desires the land (approx. 46.2 acres) to address immediate and long term expansion of its water treatment and distribution system as expressed in the letter of intent and agreements presented in Appendix 3.4L. This is a higher and better use of the land.

Proof of publication and letters to and comments from the legal or equitable owner of record of the surface areas to be affected, concerning the proposed use are provided in Appendix 3.4L.

The lands not required for PRWID's intended use, as shown on Map 3.4-9, which includes the refuse pile will be reclaimed to its premining land use of wildlife habitat (approx. 49.1 acres).

In order to facilitate the industrial postmining land use, primary roads P-1, P-2, P-4, P-5, and P-6 will be maintained in their entirety or portion there of as shown on Maps 3.4-9 and 3.4-12. Map 3.4-9 also shows general locations of underground utilities such as: raw water, culinary water, and sewer. The underground utilities lie immediately below or adjacent to Primary roads P-1 and P-4.

It should also be noted that primary roads P-1 and P-4 are not only used by the Permittee, but also Utah Power and Light, Helper City, Price City, and PRWID to check and repair their underground utilities. Furthermore, this corridor is used as a secondary escape way should the railroad crossings be blocked during an emergency. Primary roads P-2 and P-5 are routinely used by Utah Power and Light to inspect and repair their power line the traverses up Barn Canyon.

EXHIBIT 19
APPENDIX 3.4N

WILLOW CREEK PREPARATION PLANT AND REFUSE DISPOSAL FACILITY AS-BUILT RECLAMATION

3.4-6AB Reclamation Plan

The preparation plant area and refuse pile were reclaimed in the spring of 2004 according to the approved reclamation plan with the exception of the train loadout area. The train loadout area will be reclaimed during the summer/fall of 2005.

3.4-6(1)AB Postmining Land Use

The reclaimed preparation plant and refuse pile area have the postmining land use of wildlife habitat, grazing, and industrial uses. The postmining land use for the preparation plant area is industrial. Most of the Preparation Plant Area has been purchased by the Price River Water Improvement District (PRWID). PRWID purchased the land to address immediate and long term expansion of its water treatment and distribution system as expressed in the letter of intent and agreements presented in Appendix 3.4L. This is a higher and better use of the land. 46.2 acres has been designated for industrial land use.

Proof of publication, letters to and comments from the legal or equitable owner of record of the surface areas to be affected, concerning the proposed use are provided in Appendix 3.4L.

The lands not required for PRWID's intended use, as shown on Exhibit 3.4-13AB, which includes the refuse pile area (46.76 acres) and Barn Canyon Shaft Facility Area (2.34 acres) have been reclaimed to its premining land use of wildlife habitat (approx. 49.1 acres). The Barn Canyon Shaft Facility was never built. Thus, there was no reclamation activities in Barn Canyon. Although PRWID has purchased most of the preparation plant area the majority of the area was still reclaimed. See Exhibit 3.4-17AB for reclamation treatment areas.

In order to facilitate the industrial postmining land use, primary roads P-1, P-2, P-4, and P-5 will be maintained in their entirety or portion there of as shown on Exhibits 3.4-13AB and 3.4-17AB. There are underground utilities such as: raw water, culinary water, and sewer that have been left in place. These underground utilities lie immediately below or adjacent to Primary roads P-1 and P-4.

It should also be noted that primary roads P-1 and P-4 are not only used by the Permittee, but also Utah Power and Light, Helper City, Price City, and PRWID to check and repair their underground utilities. Furthermore, this corridor is used as a secondary escape way should the railroad crossings be blocked during an emergency. Primary roads P-2 and P-5 are routinely used by Utah Power and Light to inspect and repair their power lines that traverses up Barn Canyon.

3.4-6(2)AB <u>Reclamation Work</u>

The as-built reclamation topography for the preparation plant area is shown on Exhibit 3.4-13AB (Preparation Plant Area and Refuse Pile Reclamation As-Built Topography Map). The as-built reclamation cross-sections are shown on Exhibits 3.4-14AB and 3.4-15AB (Preparation Plant Area and Refuse Pile As-Built Reclamation Cross-Sections). The as-built reclamation channel profiles are shown on Exhibit 3.4-15AB (Preparation Plant Area and Refuse Pile As-Built Reclamation Cross-Section and Profiles). Channel profiles have been generated for all channels associated with the Refuse Pile. The reclamation work consisted of the following: demolition, backfilling and grading, pond removal, topsoil placement, seeding and mulching.

A description of these activities follows.

Demolition - All existing structures which lie within the disturbed area boundary and do not support the postmining land uses have been removed. However, utilities within the utility corridor, along with a buried telephone cable parallel with the utility corridor, remain. Water supply intakes serving the preparation plant outside the disturbed area boundary will also remain. In addition, the diversions and culverts identified on Exhibit 3.4-13AB remain in place.

Portal Sealing - There are no portals to seal at the preparation plant.

Grading - The area was graded to promote drainage and approximate the reclamation design topography shown on Exhibits 3.4-9, 3.4-10 and 3.4-10a. The as-built topography was achieved by blending the soil material into the adjacent area and creating landforms which resemble the surrounding topography. In many cases more of the pre-SMCRA cutslopes were covered than indicated in the approved reclamation design. The cross-sections shown on Exhibit 3.4-14AB compares the design reclamation surface to the as-built reclamation surface. The as-built topography shown on Exhibit 3.4-13AB meets the criteria set forth in R645-301-553, Backfilling and Grading.

A comparison of Exhibits 3.4-1 and 3.4-13AB indicate that all post-SMCRA and most pre-SMCRA cut slopes have been backfilled to the extent practical during reclamation. Those pre-SMCRA cut slopes which cannot practically be reclaimed are identified on Exhibit 3.4-13AB. The cut slopes were analyzed for stability in their present configuration and for long-term retention following reclamation. This analysis is presented in Appendix 3.4H, with the cross sections used to analyze the slopes shown on Exhibit 3.4-8.

As indicated in Section 4.0 of Appendix 3.4-H, the calculated factor of safety for the retained cut slopes exceeds the minimum static factor of safety of 1.3 stipulated by R645-301-553.130. Appendix 3.4-H further documents the existence of natural cliffs and ledges in the preparation plant area and concludes that the cut slopes to be retained are similar in structural composition and geometry to the naturally existing cliff/ledge formations and thus are compatible with the surrounding topography.

During the backfilling and grading, the following work was performed:

- Elimination of berms and temporary diversions, except where necessary to support the postmining land use .

- Grading to remove cut slopes to the extent practical and establish overland flow drainage to support postmining land uses.
- Construction of permanent stream channels.
- Removal of existing culverts, except where necessary to support the post mining land use.
- Removal of Ponds 011, 012A and 012B, and 013.
- Maintain existing accesses and utility corridors
- Soil preparation, seeding, fertilizing and mulching.

Reclamation included the removal of all roads and culverts, except as noted on Exhibit 3.4-13AB which are necessary to support the postmining land use, and the establishment of permanent stream channels.

The reclamation topography plan for the Unit Train Loadout area is shown on Exhibit 3.4-9. A discussion of the reclamation plan is included in Section 3.8 of this exhibit. The Unit Train Loadout is scheduled to be reclaimed during the summer of 2005.

The as-built topography shown on Exhibit 3.4-13AB is compatible with the postmining land use of industrial, wildlife habitat and grazing, and provides adequate drainage and long term stability as required by R645-301-553.522. The as-built configuration of the refuse pile is suitable for the approved postmining land use of wildlife habit and grazing. Profiles and cross-sections of the refuse pile are shown on Exhibits 3.4-14AB and 3.4-15AB.

Grading has been done to establish stable drainage of the site and stabilize cutslopes. Sediment ponds remained in place as long as possible during the grading work. The planned sequence of removal of the sediment control structures as discussed in Section 3.4-6(2) of the permit was followed during reclamation activities.

Resoiling - Most of the 95.3 acres within the Disturbed Area Boundary in the Preparation Plant Area, Barn Canyon, and Refuse Pile Area which were reclaimed were disturbed by mining

activities prior to the enactment of SMCRA. Hence, no topsoil was salvaged from the site except in the area of post-SMCRA disturbance (e.g., the refuse pile and the clean-coal storage area). The existing soils at the site were used as resoiling material except at the refuse pile and the clean-coal storage area, where the salvaged topsoil stored at the Gravel Canyon stockpile was used. Approximately 3 feet of soil was placed over any coal refuse.

The existing soils at the preparation plant site were sampled in May 1991 and analyzed for several chemical and physical parameters, including those recommended in the Division "Guidelines for Management of Topsoil and Overburden for Underground and Surface Coal Mining," dated April 1988. Results of these analyses are presented in Appendix 8-2, while sampling locations are depicted on Map 8-4. As indicated in Appendix 8-2, each of the parameters fell within the "good" to "fair" ranges as indicated in the above mentioned guideline. Hence, soil at the site was suitable for use in reclamation.

In March 2004, four soil pits were sampled and analyzed in the preparation plant and clean coal stockpiles areas to ensure suitability. The soil pit locations are shown on Exhibit 3.4-12 and the analyses presented in Appendix 3.4M. These soil samples along with those discussed in Volume 1, Section 3.1.1.5 and Chapter 8 show the subsoils to be suitable for use during reclamation. Therefore, this soil material was used in addition to the soil stored at Gravel Canyon.

The soils stored in Gravel Canyon were used to cover coal refuse at the site and to enhance the reclamation and wildlife habitat. The topsoil stored at Gravel Canyon was used in areas outside the industrial land use area. The use of the topsoil within the industrial land use area only to be disturbed at a later date by the Price River Water Improvement District was not felt to be the best utilization of the soil resource.

The refuse pile was covered with 36" of soil from the Gravel Canyon soil storage site and Pond 13 embankment during reclamation. Justification for use of less than 4' of cover on the refuse pile is the nontoxic nature of the refuse. Prior to placement of substitute topsoil on the refuse pile, the refuse was evaluated in accordance with the Division in order to prove non-toxicity.

Results of the tests were forwarded to DOGM for review and to be incorporated into Appendix 3.4M. The sample locations coincided with the station locations shown on Map 3.4-12.

During the construction of the Willow Creek Mine, approximately 450,000 tons of coal waste were removed from the mine portal face-up area and placed on the refuse pile. The coal waste at the portal face-up area was placed there by the Division of Oil, Gas and Mining's Abandoned Mined Lands (AML) Department during their cleanup of several coal waste sites along the Price River The location and depth of this material is shown on maps generated for MSHA in 1996 and 2000 (Appendix 3.4M). By overlaying these maps, it can be seen what the topography of the refuse pile surface was before the coal waste was placed, after it was placed, and what the surface was prior to reclamation.

It should be noted, that prior to removing this coal waste and placing it on the refuse pile, approximately 16 inches of growth media was salvaged and stockpiled for redistribution during reclamation. The Division of Oil, Gas and Mining did not analyze this coal waste for its toxic and acid generating potential, but instead, only covered it with a skiff of soil after they removed it from along the Price River and used it as backfill against a pre-SMCRA highwall and other cut-faces.

By contrast, the permittee has placed a minimum of three-feet of suitable cover material over this material where it is intercepted during the construction of the reclamation channel on the refuse pile to minimize the toxicity affects that may occur due to the elevated boron concentrations identified in the coal waste.

Any acid forming or toxic materials exposed during the grading operation were buried either on the Refuse Pile, adjacent to a cut slope, within a sedimentation pond, or in place. In any case, the acid and/or toxic material was buried under at least three feet of nonacid- and nontoxic forming material as measured by the final reclamation grade.

The soil material placed on the refuse pile was deep gouged, following the placement of 2.0 tons/acres of certified noxious weed free hay. The gouges provide a means by which to harvest

precipitation and snow-melt, minimize erosion, provide a place for seeds to settle, and other enhancement aspects suitable for vegetation success. Exhibit 3.4-17AB "Preparation Plant Area and Refuse Pile As-Built Topography and Treatment Map" shows the areas deep gouged and mulched during reclamation. This includes portions of the preparation plant area that will support the industrial postmining land use.

Seeding and Mulching - Two revegetation seed mixes were used at the preparation plant site, as indicated in Chapter 9 of this exhibit, and Section 5.3, Volume I . The majority of the site was seeded with the Upland Seed Mixture (Table 5.3-2b). The riparian areas shown on Exhibit 3.4-17AB will be seeded with species list #3. Following the placement of the growth media and prior to application of the reclamation seed mix, hay was incorporated into the growth media at a rate of 2 tons per acre. This was done to improve soil structure for aeration purposes, increase micropore space, and improve the water holding capacity of the soil. Incorporation of the mulch occurred during deep gouging. No fertilizer was used during the reseeding activities.

Following seeding, an additional 1.5 tons per acre of certified noxious weed free straw mulch was spread over the seeded growth media mostly by mechanical blowers with occasional hand spreading. The straw mulch was then sprayed with a tackifier and mulch mixture at about 500 lbs per acre following spreading to retain it on the reseeded slopes. The tackifier and mulch technique provides a better means for retaining the straw mulch onto the reseeded areas than does the crimping technique.

Reclamation Monitoring

Reclamation monitoring will consist of water and vegetation monitoring until bond release.

3.4-6(3)AB Reclamation Hydrology

Reclamation Channel Design - The reclamation channels for the Willow Creek Preparation Plant area were constructed to approximate the geometry of the existing natural

stream channels and to convey the design flow under stable conditions. The natural channel sections were measured in the field and approximated with a trapezoidal cross section. The reclamation channels were generally constructed with 2H:1V side slopes to ensure channel stability. However, existing stream channels, Castle Gate Ditches CGD-3 and CGD-4 were constructed with 1H:1V side slopes. These two ditches were previously designed for the operational hydrology of the Castle Gate area and were determined to be adequately designed for reclamation hydrology. The hydraulic slope of each channel was measured from electronic versions of Exhibit 3.4-16AB.

All calculations supporting the adequacy of the as-built reclamation hydrology structures are presented in Attachment 1 of this appendix. Curve numbers for the undisturbed drainage areas were based on professional judgement and typical tabulated values. The reclaimed areas were assumed to have a curve number of 75. The reclamation channel drainage areas for the Preparation Plant Area are presented on Exhibit 3.4-16AB.

Peak discharge rates used to verify channel capacities and riprap sizing for the reclamation channels were calculated based on the 100-year 6-hour precipitation event of 2.10 inches for perennial channels, intermittent channels, and any channel associated with the refuse pile. All other channels were verified for the 10-year 6-hour storm event of 1.4 inches (Miller et.al, 1973). A summary of the runoff calculations is presented in Attachment 1. The as-built reclamation channel geometries and minimum riprap sizes are presented in Table 3.4-7AB.

The following general approach was used during verification of the as-built reclamation channels:

- The capacity of the perennial and intermittent reclamation channels, as well as any channel associated with the refuse pile was based on the 100-year 6-hour storm and the <u>minimum</u> channel slope.
- The capacity of the ephemeral reclamation channels was based on the 10-year 6-hour storm and the <u>minimum</u> channel slope.
- Riprap size was verified based on the 100-year 6-hour storm and the <u>maximum</u> channel slope for perennial channel, intermittent channels and all channels associated with the refuse pile.

- Riprap size was verified based on the 10-year 6-hour storm and the maximum channel slope for ephemeral drainage channels.

- The roughness coefficient (Manning's "n") for riprapped channels was determined according to the equation (Abt et al., 1981):

$$n = 0.0456(D_{50}*\text{slope})^{0.159}$$

where, n = Manning's roughness coefficient
D_{50} = median riprap diameter (ft)
Slope = channel slope (ft/ft)

- In areas where the as-built reclamation channel construction occured on rock, riprap was not used.

- When transitioning downstream from a steep channel slope to a flat channel slope, the larger riprap from the steep section was extended into the channel section with the flatter slope for at least 15 feet to minimize erosion (Simons, Li & Associates, 1982).

The riprap and filter blanket gradations for all channels were engineered based on methods presented in Barfield et al. (1981). The procedure presented by Searcy (1967) was used to design the riprap size for all channels. This design procedure assumes that the riprap is predominately angular in shape. The filter blanket consists of a properly graded coarse grained soil; a synthetic fabric was not used.

Reclamation Culvert Design - Calculations regarding verification of the Willow Creek preparation plant reclamation culverts are presented in Attachment 1 of this appendix. Summaries of the reclamation culvert discharges and designs are presented in Table 3.4-8AB.

Three operational culverts remain after reclamation. As indicated in Attachment 1, culvert CGC-1 is an adequately designed existing18 inch culvert which will remain after reclamation. No riprap is required at the CGC-1 outlet.

CGC-5 is an adequately designed existing 48-inch diameter culvert located under the road and the Utah Railway spur. CGC-5 extends to the Price River and was shortened during reclamation as shown on Exhibit 3.4-13AB. An average riprap size of 40 inches is at the outlet.

CGC-2 consists of two 84-inch diameter CMP culverts which discharge into the channel of the Price River. These culverts are adequately designed to convey the peak flow resulting from the 100-year, 6-hour precipitation event. An average riprap size of 30 inches is at the outlet.

3.4-6(4)AB Alternative Sediment Control Measures

Due to the desire to avoid redisturbance in a future phase of reclamation, the operational hydrology sedimentation ponds 011, 012A and 012B, and 013 were removed during the reclamation grading operations. Therefore, alternative sediment control measures were implemented during reclamation of the site to reduce the quantity of sediment yield from the area. These ASCMs include the following practices in varying degrees:

1. Placement of growth media,
2. Incorporation of hay mulch into the growth media,
3. Deep gouging of the growth media,
4. Seeding the prepared soil,
5. Addition of more mulch following seeding, and
6. Chemically anchoring the final mulch layer.

Based on Simons, Li & Associates (1983), these methods constitute some of the best available control technology for the purpose of mining reclamation. These methods have been very successful at recently reclaimed sites and are expected to work well an this site.

Mechanical treatment of slopes was by deep gouging the soil to a depth of 18" to 24". Mulch was applied at the rate of 2,000 pounds per acre. Upon completion of the grading and mechanical treatment of the soil, the reclaimed area was seeded with grasses, shrubs and forbs. Seeding was be performed in the spring of 2004. Areas in which the seed does not

germinate will be reseeded. Following seeding the area was straw mulched again at a rate of 1.5 tons per acre. The straw mulch was held in place with a tackifier.

The alternative sediment controls constructed during reclamation will be inspected quarterly or after every major storm event. Corrections to any weaknesses in the implementation of the sediment control plan will be remedied immediately to prevent future silt runoff into the Price River. Corrective action will be taken when a gully greater than nine inches in depth is created due to lack of vegetation establishment, or when the mulch and seed have been transported by wind or overland flow. Corrective action will consist of regrading of the ground surface only as necessary to fill in nine inch gullies caused by erosion, and reseeding and mulching, as warranted, to reestablish vegetation.

3.4-7 Reclamation Timeline

Demolition of the site began in the fall of 2003. Reclamation of the Refuse pile began during the fall of 2003. Final reclamation of the site was completed in spring of 2004. Monitoring of the site will continue until Phase III bond release.

3.4-8 Reclamation Bond Release

As a result of the Postmining land use change the Preparation Plant area was changed to have an industrial use. This area was sold to Price River Water Improvement District ("PRIWID"). As the land owner PRIWID intends to make improvements to their property. PMC has reclaimed the site according to the approved reclamation plan and is requesting Phase III bond release for the Preparation Plant Area. The land use for the Refuse Pile area was not changed, nor was the property sold. Thus, only phase I bond release is being requested for the Refuse Pile Area. Bond release calculations can be found in Attachment 3.

3.4.9 References

Barfield, B.J., R.C. Warner, and C.T. Haan. 1981. Applied Hydrology and Sedimentology for Disturbed Areas. Oklahoma Technical Press. Stillwater, Oklahoma.

Geocomp Corporation. 1992. GEOSLOPE, Version 5.0. Concord, MA.

Hawkins, R.H. and K.A. Marshall. 1979. Storm Hydrograph Program. Final Report to the Utah Division of Oil, Gas and Mining. Utah State University. Logan, Utah.

Hoek, Evert and John Bray. 1981. Rock Slope Engineering. Third edition. The Institute of Mining and Metallurgy. London.

Miller, J.F., R.H. Frederick, and R.J. Tracey. 1973. Precipitation-Frequency Atlas of the Western United States. Volume VI-Utah. National Oceanic and Atmospheric Administration. National Weather Service. Silver Spring, Maryland.

NAVFAC DM-7 Design Manual for Soil Mechanics, Foundations, and Earth Structures. 1971. Department of the Navy. Navy Facilities Engineering Command.

Simons, Li & Associates, Inc. September 1982. OSM/TR-82/2. Surface Mining Water Diversion Design Manual. Office of Surface Mining. Washington, D.C.

Searcy, J.K. 1967. Use of Riprap for Bank Protection. U.S. Department of Transportation, Bureau of Public Roads. U.S. Government Printing Office, Washington, D.C.

U.S. Department of Agriculture. 1997. NRCS National Engineering Handbook. Section 4 Hydrology. National Resource Conservation Service. Washington, D.C.

U.S. Soil Conservation Service. 1972. National Engineering Handbook: Section 4 - Hydrology. U.S. Government Printing Office. Washington, D.C.

TABLES

TABLE 3.4-6AB

**PREPARATION PLANT
RECLAMATION WATERSHED CHARACTERISTICS**

WATERSHED (CGRWS-)	CURVE NUMBER	TIME OF CONCENTRATION (hr)	DRAINAGE AREA (acres)	PEAK FLOW (cfs)[a]
1	71	0.463	263.49	31.19
2	75	0.100	11.19	4.13
3	75	0.081	5.22	1.99
4	75	0.073	4.74	1.84
5	75	0.081	6.10	2.33
6	71	0.108	3.02	0.08
7	87	0.160	4.81	1.96
8	88	0.259	6.68	2.71
9	76	0.180	19.1	1.32
10	83	0.043	3.92	1.22

(a) Peak flows based on the following design events:

10-year, 6-hour	100-year, 6-hour
CGRWS-6	CGRWS-1
CGRWS-7	CGRWS-2
CGRWS-8	CGRWS-3
CGRWS-9	CGRWS-4
CGRWS-10	CGRWS-5

TABLE 3.4-7AB

AS-BUILT RECLAMATION DITCH DESIGN SUMMARY

Diversion Ditch (CGRD-)	Design Flow (cfs)	Minimum Conditions				Calculation Results		Min. Design Requirements	
		Bottom Width (ft)[a]	Side Slopes (ft)	Max. Bottom Slope (%)	Min. Bottom Slope (%)	Max. Velocity (ft/s)	Max. Flow Depth (ft)	Channel Depth (ft)	Riprap D_{50} (in) [c]
1	31.19	10	2:1	30.9	3.0	7.42	0.62	1.42	12
2	4.13	6	2.73:1	21.9	10.5	4.07	0.18	0.92	6
3 (MS)[b]	1.99	3.5	2.25:1	12.0	7.0	3.73	0.16	1.0	None
3 (SS)[b]	1.99	4.5	2.45:1	22.7	7.1	3.44	0.16	0.92	6
4 (MS)[b]	1.84	10	2.5:1	10.3	4.0	2.40	0.10	1.0	none
4 (SS)[b]	1.84	4.0	2.4:1	43.1	15.4	3.99	0.13	0.83	6
5 (MS)[b]	2.33	10.0	3:1	11.3	2.5	2.70	0.13	1.5	None
5 (SS)[b]	2.33	4.0	3:1	34.1	12.4	4.09	0.16	1.0	6
6	0.08	2.0	1:1	21.9	1.4	1.64	0.06	1.0	None
7	3.60	2.50	2.1:1	42.1	3.4	5.79	0.35	1.1	6
8	1.96	2.50	1.9:1	29.1	6.3	4.36	0.22	0.92	6
9	1.32	0	1:1 4.4:1	7.5	1.0	3.99	0.51	0.67	None
9a	1.32	2.75	2.6:1	55.9	4.8	4.18	0.17	0.75	6
10 [d]	1.10	0	1.5:1	8.3	4.4	4.38	0.69	1.0	None
10a	2.71	2.0	1.75:1	2.7	0.3	3.46	0.70	1.0	None
11	1.22	0	1.2:1 4:1	1.3	0.4	2.05	0.60	1.17	None

(a) Minimum bottom width measured at mInimum depth from top of channel.
(b) MS = mild slope (no riprap), SS = steep slope (riprapped section).
(c) Riprap D_{50} calculated by using the Searcy method developed for the U.S. D.O.T.
(d) Channel dimensions represent the operational configuration. The watershed area changed and this calculation was done to verify that the operational channel was still adequate.

TABLE 3.4-8AB

AS-BUILT RECLAMATION CULVERT DESIGN SUMMARY

Culvert (CGC-)	Size and Type	Slope (%)	Peak Flow (cfs)	Outflow Velocity (ft/s)	Actual Outlet D_{50}[(a)] (in)
1	18" CMP	17	0.08	3.07	None Req'd
2	2-84" CMP	5	222.90	14.29	30
5	60" Concrete	10	32.52	20.37	40

(a) Actual riprap size exceeds minimum requirements under reclamation

Note: The above culverts are existing operational culverts that have been left in place to convey runoff from reclamation channels under the road and railroad tracks to the Price River. Greater detail about these culverts can be found on Table 3.4-3.

CGC-5 will be replaced by channel CGRD-1 up to the road where the inlet is assumed to be projecting for the inlet capacity estimate.

ATTACHMENT 1

AS-BUILT RECLAMATION HYDROLOGY CALCULATIONS

ATTACHMENT 2

PUBLIC NOTICE AND LETTERS TO AGENCY AND LAND OWNERS

Public Notice

Application for Phase I Bond Release for the Coal Refuse Pile and Phase III Bond Release for the Preparation Plant
Plateau Mining Corporation
Willow Creek Mine
Permit C/007/038, Approved 04/24/2001
Carbon County, Utah

Plateau Mining Corporation, P.O. Box 30, Helper, UT 84526, has completed Phase I of the approved reclamation plan for the approximately 49.1 acres of land related to the Coal Refuse Pile and Phase III of the approved reclamation plan for approximately 46.2 acres of land related to the Preparation Plant at the Willow Creek Mine. The Phase I portion of the bond release application is based on completing the demolition, backfilling and grading and drainage control requirements in accordance with the approved reclamation plan and the Phase III portion of the bond release is based on an alternative post mining land use wherein this land was sold to the Price River Water Improvement District for industrial use. The reclamation work applicable to this bond release application was completed in the spring of 2004

In accordance with the requirements of R645-301-880, of the State of Utah R645-Coal Mining Rules, notice is hereby given to the general public that Plateau Mining Corporation is applying for partial release of the performance bond posted for this operation.

The surety bond posted for the Willow Creek Mine is $7,866,000 of which $2,706,000 is designated for the Coal Refuse Pile and Preparation Plant. Plateau Mining Corporation is seeking Phase I release of $682,000 from the Coal Refuse Pile portion of the bond and Phase III release of $ 1,479,000 from the Preparation Plant portion of the bond.

The Refuse Pile and Preparation Plant are located on the Helper, Utah, U.S. Geological Survey 7.5 minute quadrangle map. This reclaimed land is located in Price Canyon approximately 3.5 miles north of Helper, Utah on the following described lands:

Township 12 South, Range 9 East, SLB&M, Utah

Section 36: Portions of the	NE1/4, NW1/4, SE1/4, NW1/4, SW1/4, NW1/4, and SW1/4.
Section 35: Portions of the	NE1/4, SE1/4, SE1/4, SE1/4, and SE1/4, NE1/4.

Township 13 South, Range 9 East, SLB&M, Utah

Section 1: Portions of the NW1/4, NW1/4,

The Utah Division of Oil, Gas and Mining will now evaluate the proposal to determine whether it meets all the criteria of the Permanent Program Performance Standards according to the requirements of the Utah Coal Mining Rules.

Written comments, objections and requests for public hearing or informal conference on this proposal may be addressed to:

Utah Coal Program
Utah Division of Oil, Gas and Mining
1594 West North Temple, Suite 1210
P.O. Box 145801
Salt Lake City, Utah 84114-5801

Closing date for submission of such comments, objections and requests for public hearing or informal conference on this proposal must be submitted by November 13, 2005.

Published in the Sun Advocate – September 22, September 29, October 6, October 13, 2005

PLATEAU MINING CORPORATION

Willow Creek Mine
P.O. Box 30
Helper, Utah 84526

September 19, 2005

Mr. Hugh Kirkham
State of Utah
Department of Transportation
940 South Carbon Avenue
Price, Utah 84501

Re: Notification of Application for Phase I Bond Release for the Coal Refuse Pile and Phase III Bond Release for the Preparation Plant, Plateau Mining Corporation, Willow Creek Mine, C/007/038, Carbon County, Utah

Dear Mr. Kirkham:

Plateau Mining Corporation, P.O. Box 30, Helper, UT 84526, has completed Phase I of the approved reclamation plan for the approximately 49.1 acres of land related to the Coal Refuse Pile and Phase III of the approved reclamation plan for approximately 46.2 acres of land related to the Preparation Plant at the Willow Creek Mine. The Phase I portion of the bond release application is based on completing the demolition, backfilling and grading and drainage control requirements in accordance with the approved reclamation plan and the Phase III portion of the bond release is based on an alternative post mining land use wherein this land was sold to the Price River Water Improvement District for industrial use. The reclamation work applicable to this bond release application was completed in the spring of 2004

In accordance with the requirements of R645-301-880, of the State of Utah R645-Coal Mining Rules, notice is hereby given to the general public that Plateau Mining Corporation is applying for partial release of the performance bond posted for this operation.

The surety bond posted for the Willow Creek Mine is $7,866,000 of which $2,706,000 is designated for the Coal Refuse Pile and Preparation Plant. Plateau Mining Corporation is seeking Phase I release of $682,000 from the Coal Refuse Pile portion of the bond and Phase III release of $ 1,479,000 from the Preparation Plant portion of the bond.

The Refuse Pile and Preparation Plant are located on the Helper, Utah, U.S. Geological Survey 7.5 minute quadrangle map. This reclaimed land is located in Price Canyon approximately 3.5 miles north of Helper, Utah on the following described lands:

Township 12 South, Range 9 East, SLB&M, Utah

Section 36: Portions of the NE1/4, NW1/4,
SE1/4, NW1/4,
SW1/4, NW1/4, and
SW1/4.

Section 35: Portions of the NE1/4, SE1/4,
SE1/4, SE1/4, and
SE1/4, NE1/4.

Township 13 South, Range 9 East, SLB&M, Utah

Section 1: Portions of the NW1/4, NW1/4,

Comments concerning bond release from the legal or equitable owner of record of the surface areas to be affected and from the Federal, Utah and local government agencies with would have to initiate, implement, approve or authorize the proposed use of the land following reclamation should be mailed to: Plateau Mining Corporation, Attention: Dennis Ware, P.O. Box 30 Helper, Utah 84526.

Sincerely,

Dennis Ware
Controller and Administrative Manager
(435) 472-4737
dware@foundationcoal.com

Mailed to:

Mr. Dave Levanger
Carbon County Planning and Zoning
120 East Main Street
Price, Utah 84501

Mr. Roger Wheeler
Director Land Management
700 Morrison Road
Gahanna, Ohio 43230-6642

Mr. Gary Harwood
Helper City
P.O. Box 221
Helper, Utah 84526

Mr. Harold Cunningham
Utah Power and Light – Carbon Plant
Helper, Utah 84526

Carbon County Commissioners
120 East Main Street
Price, Utah 84501

Mr. Phil Palmer
Price River Water Improvement District
P.O. Box 903
265 South Fairgrounds Road
Price, Utah 84501

Mr. Patrick Gubbins
Bureau of Land Management
125 South 600 West
Price, Utah 84501

Mr. Kevin S. Carter
Director
School and Institutional Trust Lands Administration
675 East 500 South, Suite 500
Salt Lake City, Utah 84102-2818

Mr. Hugh Kirkham
State of Utah
Department of Transportation
940 South Carbon Avenue
Price, Utah 84501

ATTACHMENT 3

BOND RELEASE CALCULATIONS

PREPARATION PLANT AND REFUSE PILE
BOND RELEASE CALCULATIONS

As a result of the Post Mining Land Use Change for the Preparation Plant area the land use for the Preparation Plant area was changed to an industrial use. Price River Water Improvement District ("PRWID") has purchased the Preparation Plant area and intends to improve the site for its use. Due to the change in ownership and land use designation the Preparation Plant area is eligible for phase III bond release. When bond calculations were made for the site the Refuse Pile area was included in the bond calculation. The Refuse Pile area is only eligible for phase 1 bond release. These calculations determine the portions of the bond eligible for phase I and phase III bond release. The total bond for the site is $2,706,000 as shown on the summary sheet for the Preparation Plant area in Exhibit 17. The reference year for this bond cost was 2006. All calculations will be adjusted to 2006 costs to allow direct comparison.

The entire site has been reclaimed with the exception of the Unit Train Loadout area. Any structures remaining have been left at the request of PRWID.

Total bond amount = $2,706,000

Loadout Area

The loadout area has not been reclaimed yet so the reclamation cost for this area must be subtracted from the total bond money available for bond release. The attached spreadsheet calculates the reclamation costs for the loadout area. The reclamation cost was estimated to be $90,864.

Phase III Bond Release (Prep Plant Area)

The summary bond sheet in Exhibit 17 identifies the demolition subtotal as $614,133. Indirect costs and escalation are added as follows:

Mob/demob (10%) $61,413
Contingency (5%) $30,707
Redesign fee (2.5%) $15,353
Main office expense (6.8%) $41,761
Project management fee (2.5%) $15,353

Subtotal indirect costs $164,587

Total demolition cost $778,720

Escalation (3.12% per year for 5 years to escalate to 2006) $908,021

The Preparation Plant PMLUC Reclamation Option Bond Estimate in Exhibit 17 separated the earthwork, drainage controls, topsoil distribution, revegetation, and monitoring for the

Preparation Plant and the Refuse Pile. The direct and indirect cost for reclaiming the Preparation Plant area is $600,985. Escalating that total to 2006 assuming an inflation rate of 3.27% annually results in a cost of $661,865.

Total amount eligible for Phase III bond release = $908,021 - $90,864 + 661,865 = $1,479,000 rounded to nearest $000.

Phase I Bond Release (Refuse Pile Area)

The remaining bond amount ($2,706,000 - $1,479,000 =) $1,227,000 less $91,000 for the loadout leaves $1,136,000 eligible for Phase I bond release. The as-built reclamation maps demonstrate that the Refuse Pile area has been reclaimed. PMC is requesting the maximum bond release for this area of 60%.

Total bond release for the Refuse Pile area = 0.6($1,136,000) = $682,000 rounded to nearest $000.

Bond Release Summary

Phase III bond release:	$1,479,000
Phase I bond release:	$ 682.000
Remaining bond amount:	$ 545,000
Total bond:	$2,706,000

Permit No.	Item No.	Description	Quantity	Unit	Material Cost Per Unit	Material Cost Total	Equipment Cost Per Unit	Equipment Cost Total	Labor Cost Per Unit	Labor Cost Total	Project Cost Per Unit	Project Cost Total
		DEMOLITION										
Notes:												
	(a) Means Heavy Construction Cost Data, 2000 inflated by 9% to reflect 2003 costs											
62	24	UNIT TRAIN LOADOUT										
		Metal bldg. (42' X 30' X 120')	151200	CF			0.11	16632.00	0.08	12096.00	0.19	28,728
		(02220-100-0012)										
		Concrete piers w/ rebar (2' X 2' X 6') X 2, 48 CF	48	CF			1.10	52.80	1.56	74.88	2.66	128
		(02220-550-1140 and -1200) SEE NOTES										
		10% added for reinforcement										
		Concrete pad w/ rebar (42' X 30' X 5'), 6300 CF	10.5	DAY			1012.61	10632.41	284.49	2987.15	1297.10	13,620
		(Hydraulic Excavator w/ 2 CY bucket)										
		(01590-200-0300)										
		12" Concrete pad w/ mesh (45' X 54'), 2430 CF	90	CY			45.78	4120.20	45.78	4120.20	91.56	8,240
		(02220-875-2200)										
		Bridge - 2 flatbed rail cars (85' X 9')	1	LS			817.50	817.50	545.00	545.00	1362.50	1,363
		Bridge abutments w/ rebar (25' X 10' X 3') 2, 1500 CF	2.5	DAY			1226.25	3065.63	367.55	918.88	1593.80	3,985
		(Hydraulic Excavator w/ 2 CY bucket)										
		(01590-200-0300)										
		Onsite disposal of concrete (loose)	381	CY			3.79	1443.99	1.92	731.52	5.71	2,176
		(02220-550-4200)										
												58,238
		DEMOLITION TOTAL										
		ROUGH GRADING										
		EXCAVATION - BACKFILLING AND GRADING										
	1	Rough grading with a 4 CY Excavator (CAT 345)										
		Excavation of 756 CY	0.1	MONTH			14945.00	1495			14945.00	1495
		Excavator operating cost including operator	20.0	HRS					101.10	2022	101.10	2022
		(Dataquest bluebook 3Q02 pg 10-8)										

Permit No.	Item No.	Description	Quantity	Unit	Material Cost Per Unit	Material Cost Total	Equipment Cost Per Unit	Equipment Cost Total	Labor Cost Per Unit	Labor Cost Total	Project Cost Per Unit	Project Cost Total
	2	Water Truck, 1/2 time operator	0.1	MO			3270.00	327.00	4510.00	451.00	7780.00	778
		(01590-400-7000)										
		Assume a half time operator at $205/day operation cost										
		Assume 22 operating days per month and 8 hours per day										
	8	Foreman (01310-700-0200)	0.1	MO					6471.80	647	6471.80	647
	9	Pickup Truck (01590-400-7200)	0.1	MO			784.40	78			784.40	78
		EXCAVATION AND ROUGH GRADING TOTAL										**5,020**
::												
		REVEGETATION										
	1	Seeding, hydro with mulch (35lb/acre)	28.00	MSF	18.03	504.84	8.56	239.68	8.05	225.40	34.64	969.92
		(02920-510-1700) pit and road										
	2	Straw mulch - 2 tons/acre incorporated into the soil	28.00	MSF	20.17	564.76	0.92	25.76	0.71	19.88	21.80	610.40
		during gouging										
		(02910-500-0350) pit and road										
	3	Deep gouging/mixing in mulch with excavator 2 CY (rental)	0.05	MONTH			9,205.00	460.25			9,205.00	460.25
		(Dataquest 3Q02 pg 10-8)										
		Operating costs (Dataquest 3Q02 pg 10-8)	8.00	HR			80.90	647.20			80.90	647.20
		REVEGETATION TOTAL										**2,687.77**
		Revegetation Subtotal										2,688
		Reseeding and Replanting (25%)										672
		REVEGETATION TOTAL										**3,360**
::												
		LOADOUT AREA										
		DIRECT COST SUMMARY										
		Demolition										58,238
		Rough Grading Excavation Total										5,020
		Revegetation Total										3,360
		Total Direct Costs										66,618

Permit No.	Item No.	Description	Quantity	Unit	Material Cost Per Unit	Material Cost Total	Equipment Cost Per Unit	Equipment Cost Total	Labor Cost Per Unit	Labor Cost Total	Project Cost Per Unit	Project Cost Total
		LOADOUT AREA										
		INDIRECT COSTS										
		Mobilization/Demobilization (5%)	Average from 2000 OSM Reclamation Bond Amount Calculation Handbook and DOGM recommended									3,331
		Contingencies (4%)	Average from 2000 OSM Reclamation Bond Amount Calculation Handbook									2,665
		Engineering Redesign Fee (2.5%)	Minimum from 2000 OSM Reclamation Bond Amount Calculation Handbook									1,665
		Contractor Profit and Overhead (10%)										6,662
		Reclamation Management Fee (2.0% of inflated direct costs)	From 2000 OSM Reclamation Bond Amount Calculation Handbook									1,565
		Total Indirect Costs										15,888
		Subtotal Reclamation Cost										82,506
		Escalation - 10.13% (3.27%/yr over 3 yrs.)										8,358
										Loadout Reclamation Cost		90,864

APPENDIX 3.4N

WILLOW CREEK PREPARATION PLANT
AND REFUSE DISPOSAL FACILITY
AS-BUILT RECLAMATION

EXHIBIT 19
APPENDIX 3.4N

WILLOW CREEK PREPARATION PLANT AND REFUSE DISPOSAL FACILITY AS-BUILT RECLAMATION

PLATEAU MINING CORPORATION
WILLOW CREEK MINE
Price, Utah

Prepared by

EARTHFAX ENGINEERING, INC.
Midvale, Utah

August 2005

TABLE OF CONTENTS

Section	Page
3.4-6 Reclamation Plan	3.4-1
3.4-6(1) Postmining Land Use	3.4-1
3.4-6(2) Reclamation Work	3.4-2
3.4-6(3) Reclamation Hydrology	3.4-7
3.4-6(4) Reclamation Alternative Sediment Controls	3.4-10
3.4-7 Reclamation Timetable	3.4-11
3.4-8 Reclamation Bond Release	3.4-11
3.4-9 References	3.4-12

LIST OF TABLES

Table

3.4-6AB PREPARATION PLANT AREA AS-BUILT RECLAMATION WATERSHED CHARACTERISTICS

3.4-7AB AS-BUILT RECLAMATION DITCH DESIGN SUMMARY

3.4-8AB AS-BUILT RECLAMATION CULVERT DESIGN SUMMARY

LIST OF ATTACHMENTS

Attachments

ATTACHMENT 1 AS-BUILT RECLAMATION HYDROLOGY CALCULATIONS
ATTACHMENT 2 PUBLIC NOTICE AND LETTERS TO AGENCY AND LAND OWNERS
ATTACHMENT 3 BOND RELEASE CALCULATIONS

LIST OF MAPS

Exhibits

3.4-13AB PREPARATION PLANT AREA AND REFUSE PILE AS-BUILT TOPOGRAPHY MAP

3.4-14AB PREPARATION PLANT AREA AND REFUSE PILE AS-BUILT RECLAMATION CROSS-SECTIONS

3.4-15AB PREPARATION PLANT AREA AND REFUSE PILE AS-BUILT CROSS-SECTIONS AND PROFILES

3.4-16AB PREPARATION PLANT AREA AND REFUSE PILE AS-BUILT WATERSHED MAP

3.4-17AB PREPARATION PLANT AREA AND REFUSE PILE AS-BUILT TOPOGRAPHY AND TREATMENT MAP

The maps listed above have been included in the map section of Exhibit 19 Section 3.4. The maps are not included in this appendix but are referenced here to indicate that as-built reclamation maps have been prepared.

EXHIBIT 19
APPENDIX 3.4N

WILLOW CREEK PREPARATION PLANT AND REFUSE DISPOSAL FACILITY AS-BUILT RECLAMATION

3.4-6AB Reclamation Plan

The preparation plant area and refuse pile were reclaimed in the spring of 2004 according to the approved reclamation plan with the exception of the train loadout area. The train loadout area will be reclaimed during the summer/fall of 2005.

3.4-6(1)AB Postmining Land Use

The reclaimed preparation plant and refuse pile area have the postmining land use of wildlife habitat, grazing, and industrial uses. The postmining land use for the preparation plant area is industrial. Most of the Preparation Plant Area has been purchased by the Price River Water Improvement District (PRWID). PRWID purchased the land to address immediate and long term expansion of its water treatment and distribution system as expressed in the letter of intent and agreements presented in Appendix 3.4L. This is a higher and better use of the land. 46.2 acres has been designated for industrial land use.

Proof of publication, letters to and comments from the legal or equitable owner of record of the surface areas to be affected, concerning the proposed use are provided in Appendix 3.4L.

The lands not required for PRWID's intended use, as shown on Exhibit 3.4-13AB, which includes the refuse pile area (46.76 acres) and Barn Canyon Shaft Facility Area (2.34 acres) have been reclaimed to its premining land use of wildlife habitat (approx. 49.1 acres). The Barn Canyon Shaft Facility was never built. Thus, there was no reclamation activities in Barn Canyon. Although PRWID has purchased most of the preparation plant area the majority of the area was still reclaimed. See Exhibit 3.4-17AB for reclamation treatment areas.

In order to facilitate the industrial postmining land use, primary roads P-1, P-2, P-4, and P-5 will be maintained in their entirety or portion there of as shown on Exhibits 3.4-13AB and 3.4-17AB. There are underground utilities such as: raw water, culinary water, and sewer that have been left in place. These underground utilities lie immediately below or adjacent to Primary roads P-1 and P-4.

It should also be noted that primary roads P-1 and P-4 are not only used by the Permittee, but also Utah Power and Light, Helper City, Price City, and PRWID to check and repair their underground utilities. Furthermore, this corridor is used as a secondary escape way should the railroad crossings be blocked during an emergency. Primary roads P-2 and P-5 are routinely used by Utah Power and Light to inspect and repair their power lines that traverses up Barn Canyon.

3.4-6(2)AB <u>Reclamation Work</u>

The as-built reclamation topography for the preparation plant area is shown on Exhibit 3.4-13AB (Preparation Plant Area and Refuse Pile Reclamation As-Built Topography Map). The as-built reclamation cross-sections are shown on Exhibits 3.4-14AB and 3.4-15AB (Preparation Plant Area and Refuse Pile As-Built Reclamation Cross-Sections). The as-built reclamation channel profiles are shown on Exhibit 3.4-15AB (Preparation Plant Area and Refuse Pile As-Built Reclamation Cross-Section and Profiles). Channel profiles have been generated for all channels associated with the Refuse Pile. The reclamation work consisted of the following: demolition, backfilling and grading, pond removal, topsoil placement, seeding and mulching.

A description of these activities follows.

Demolition - All existing structures which lie within the disturbed area boundary and do not support the postmining land uses have been removed. However, utilities within the utility corridor, along with a buried telephone cable parallel with the utility corridor, remain. Water supply intakes serving the preparation plant outside the disturbed area boundary will also remain. In addition, the diversions and culverts identified on Exhibit 3.4-13AB remain in place.

Portal Sealing - There are no portals to seal at the preparation plant.

Grading - The area was graded to promote drainage and approximate the reclamation design topography shown on Exhibits 3.4-9, 3.4-10 and 3.4-10a. The as-built topography was achieved by blending the soil material into the adjacent area and creating landforms which resemble the surrounding topography. In many cases more of the pre-SMCRA cutslopes were covered than indicated in the approved reclamation design. The cross-sections shown on Exhibit 3.4-14AB compares the design reclamation surface to the as-built reclamation surface. The as-built topography shown on Exhibit 3.4-13AB meets the criteria set forth in R645-301-553, Backfilling and Grading.

A comparison of Exhibits 3.4-1 and 3.4-13AB indicate that all post-SMCRA and most pre-SMCRA cut slopes have been backfilled to the extent practical during reclamation. Those pre-SMCRA cut slopes which cannot practically be reclaimed are identified on Exhibit 3.4-13AB. The cut slopes were analyzed for stability in their present configuration and for long-term retention following reclamation. This analysis is presented in Appendix 3.4H, with the cross sections used to analyze the slopes shown on Exhibit 3.4-8.

As indicated in Section 4.0 of Appendix 3.4-H, the calculated factor of safety for the retained cut slopes exceeds the minimum static factor of safety of 1.3 stipulated by R645-301-553.130. Appendix 3.4-H further documents the existence of natural cliffs and ledges in the preparation plant area and concludes that the cut slopes to be retained are similar in structural composition and geometry to the naturally existing cliff/ledge formations and thus are compatible with the surrounding topography.

During the backfilling and grading, the following work was performed:

- Elimination of berms and temporary diversions, except where necessary to support the postmining land use .

- Grading to remove cut slopes to the extent practical and establish overland flow drainage to support postmining land uses.
- Construction of permanent stream channels.
- Removal of existing culverts, except where necessary to support the post mining land use.
- Removal of Ponds 011, 012A and 012B, and 013.
- Maintain existing accesses and utility corridors
- Soil preparation, seeding, fertilizing and mulching.

Reclamation included the removal of all roads and culverts, except as noted on Exhibit 3.4-13AB which are necessary to support the postmining land use, and the establishment of permanent stream channels.

The reclamation topography plan for the Unit Train Loadout area is shown on Exhibit 3.4-9. A discussion of the reclamation plan is included in Section 3.8 of this exhibit. The Unit Train Loadout is scheduled to be reclaimed during the summer of 2005.

The as-built topography shown on Exhibit 3.4-13AB is compatible with the postmining land use of industrial, wildlife habitat and grazing, and provides adequate drainage and long term stability as required by R645-301-553.522. The as-built configuration of the refuse pile is suitable for the approved postmining land use of wildlife habit and grazing. Profiles and cross-sections of the refuse pile are shown on Exhibits 3.4-14AB and 3.4-15AB.

Grading has been done to establish stable drainage of the site and stabilize cutslopes. Sediment ponds remained in place as long as possible during the grading work. The planned sequence of removal of the sediment control structures as discussed in Section 3.4-6(2) of the permit was followed during reclamation activities.

Resoiling - Most of the 95.3 acres within the Disturbed Area Boundary in the Preparation Plant Area, Barn Canyon, and Refuse Pile Area which were reclaimed were disturbed by mining

activities prior to the enactment of SMCRA. Hence, no topsoil was salvaged from the site except in the area of post-SMCRA disturbance (e.g., the refuse pile and the clean-coal storage area). The existing soils at the site were used as resoiling material except at the refuse pile and the clean-coal storage area, where the salvaged topsoil stored at the Gravel Canyon stockpile was used. Approximately 3 feet of soil was placed over any coal refuse.

The existing soils at the preparation plant site were sampled in May 1991 and analyzed for several chemical and physical parameters, including those recommended in the Division "Guidelines for Management of Topsoil and Overburden for Underground and Surface Coal Mining," dated April 1988. Results of these analyses are presented in Appendix 8-2, while sampling locations are depicted on Map 8-4. As indicated in Appendix 8-2, each of the parameters fell within the "good" to "fair" ranges as indicated in the above mentioned guideline. Hence, soil at the site was suitable for use in reclamation.

In March 2004, four soil pits were sampled and analyzed in the preparation plant and clean coal stockpiles areas to ensure suitability. The soil pit locations are shown on Exhibit 3.4-12 and the analyses presented in Appendix 3.4M. These soil samples along with those discussed in Volume 1, Section 3.1.1.5 and Chapter 8 show the subsoils to be suitable for use during reclamation. Therefore, this soil material was used in addition to the soil stored at Gravel Canyon.

The soils stored in Gravel Canyon were used to cover coal refuse at the site and to enhance the reclamation and wildlife habitat. The topsoil stored at Gravel Canyon was used in areas outside the industrial land use area. The use of the topsoil within the industrial land use area only to be disturbed at a later date by the Price River Water Improvement District was not felt to be the best utilization of the soil resource.

The refuse pile was covered with 36" of soil from the Gravel Canyon soil storage site and Pond 13 embankment during reclamation. Justification for use of less than 4' of cover on the refuse pile is the nontoxic nature of the refuse. Prior to placement of substitute topsoil on the refuse pile, the refuse was evaluated in accordance with the Division in order to prove non-toxicity.

Results of the tests were forwarded to DOGM for review and to be incorporated into Appendix 3.4M. The sample locations coincided with the station locations shown on Map 3.4-12.

During the construction of the Willow Creek Mine, approximately 450,000 tons of coal waste were removed from the mine portal face-up area and placed on the refuse pile. The coal waste at the portal face-up area was placed there by the Division of Oil, Gas and Mining's Abandoned Mined Lands (AML) Department during their cleanup of several coal waste sites along the Price River The location and depth of this material is shown on maps generated for MSHA in 1996 and 2000 (Appendix 3.4M). By overlaying these maps, it can be seen what the topography of the refuse pile surface was before the coal waste was placed, after it was placed, and what the surface was prior to reclamation.

It should be noted, that prior to removing this coal waste and placing it on the refuse pile, approximately 16 inches of growth media was salvaged and stockpiled for redistribution during reclamation. The Division of Oil, Gas and Mining did not analyze this coal waste for its toxic and acid generating potential, but instead, only covered it with a skiff of soil after they removed it from along the Price River and used it as backfill against a pre-SMCRA highwall and other cut-faces.

By contrast, the permittee has placed a minimum of three-feet of suitable cover material over this material where it is intercepted during the construction of the reclamation channel on the refuse pile to minimize the toxicity affects that may occur due to the elevated boron concentrations identified in the coal waste.

Any acid forming or toxic materials exposed during the grading operation were buried either on the Refuse Pile, adjacent to a cut slope, within a sedimentation pond, or in place. In any case, the acid and/or toxic material was buried under at least three feet of nonacid- and nontoxic forming material as measured by the final reclamation grade.

The soil material placed on the refuse pile was deep gouged, following the placement of 2.0 tons/acres of certified noxious weed free hay. The gouges provide a means by which to harvest

precipitation and snow-melt, minimize erosion, provide a place for seeds to settle, and other enhancement aspects suitable for vegetation success. Exhibit 3.4-17AB "Preparation Plant Area and Refuse Pile As-Built Topography and Treatment Map" shows the areas deep gouged and mulched during reclamation. This includes portions of the preparation plant area that will support the industrial postmining land use.

Seeding and Mulching - Two revegetation seed mixes were used at the preparation plant site, as indicated in Chapter 9 of this exhibit, and Section 5.3, Volume I . The majority of the site was seeded with the Upland Seed Mixture (Table 5.3-2b). The riparian areas shown on Exhibit 3.4-17AB will be seeded with species list #3. Following the placement of the growth media and prior to application of the reclamation seed mix, hay was incorporated into the growth media at a rate of 2 tons per acre. This was done to improve soil structure for aeration purposes, increase micropore space, and improve the water holding capacity of the soil. Incorporation of the mulch occurred during deep gouging. No fertilizer was used during the reseeding activities.

Following seeding, an additional 1.5 tons per acre of certified noxious weed free straw mulch was spread over the seeded growth media mostly by mechanical blowers with occasional hand spreading. The straw mulch was then sprayed with a tackifier and mulch mixture at about 500 lbs per acre following spreading to retain it on the reseeded slopes. The tackifier and mulch technique provides a better means for retaining the straw mulch onto the reseeded areas than does the crimping technique.

Reclamation Monitoring

Reclamation monitoring will consist of water and vegetation monitoring until bond release.

3.4-6(3)AB Reclamation Hydrology

Reclamation Channel Design - The reclamation channels for the Willow Creek Preparation Plant area were constructed to approximate the geometry of the existing natural

stream channels and to convey the design flow under stable conditions. The natural channel sections were measured in the field and approximated with a trapezoidal cross section. The reclamation channels were generally constructed with 2H:1V side slopes to ensure channel stability. However, existing stream channels, Castle Gate Ditches CGD-3 and CGD-4 were constructed with 1H:1V side slopes. These two ditches were previously designed for the operational hydrology of the Castle Gate area and were determined to be adequately designed for reclamation hydrology. The hydraulic slope of each channel was measured from electronic versions of Exhibit 3.4-16AB.

All calculations supporting the adequacy of the as-built reclamation hydrology structures are presented in Attachment 1 of this appendix. Curve numbers for the undisturbed drainage areas were based on professional judgement and typical tabulated values. The reclaimed areas were assumed to have a curve number of 75. The reclamation channel drainage areas for the Preparation Plant Area are presented on Exhibit 3.4-16AB.

Peak discharge rates used to verify channel capacities and riprap sizing for the reclamation channels were calculated based on the 100-year 6-hour precipitation event of 2.10 inches for perennial channels, intermittent channels, and any channel associated with the refuse pile. All other channels were verified for the 10-year 6-hour storm event of 1.4 inches (Miller et.al, 1973). A summary of the runoff calculations is presented in Attachment 1. The as-built reclamation channel geometries and minimum riprap sizes are presented in Table 3.4-7AB.

The following general approach was used during verification of the as-built reclamation channels:

- The capacity of the perennial and intermittent reclamation channels, as well as any channel associated with the refuse pile was based on the 100-year 6-hour storm and the <u>minimum</u> channel slope.
- The capacity of the ephemeral reclamation channels was based on the 10-year 6-hour storm and the <u>minimum</u> channel slope.
- Riprap size was verified based on the 100-year 6-hour storm and the <u>maximum</u> channel slope for perennial channel, intermittent channels and all channels associated with the refuse pile.

- Riprap size was verified based on the 10-year 6-hour storm and the maximum channel slope for ephemeral drainage channels.

- The roughness coefficient (Manning's "n") for riprapped channels was determined according to the equation (Abt et al., 1981):

$$n = 0.0456(D_{50}*\text{slope})^{0.159}$$

where, n = Manning's roughness coefficient
D_{50} = median riprap diameter (ft)
Slope = channel slope (ft/ft)

- In areas where the as-built reclamation channel construction occured on rock, riprap was not used.

- When transitioning downstream from a steep channel slope to a flat channel slope, the larger riprap from the steep section was extended into the channel section with the flatter slope for at least 15 feet to minimize erosion (Simons, Li & Associates, 1982).

The riprap and filter blanket gradations for all channels were engineered based on methods presented in Barfield et al. (1981). The procedure presented by Searcy (1967) was used to design the riprap size for all channels. This design procedure assumes that the riprap is predominately angular in shape. The filter blanket consists of a properly graded coarse grained soil; a synthetic fabric was not used.

Reclamation Culvert Design - Calculations regarding verification of the Willow Creek preparation plant reclamation culverts are presented in Attachment 1 of this appendix. Summaries of the reclamation culvert discharges and designs are presented in Table 3.4-8AB.

Three operational culverts remain after reclamation. As indicated in Attachment 1, culvert CGC-1 is an adequately designed existing18 inch culvert which will remain after reclamation. No riprap is required at the CGC-1 outlet.

CGC-5 is an adequately designed existing 48-inch diameter culvert located under the road and the Utah Railway spur. CGC-5 extends to the Price River and was shortened during reclamation as shown on Exhibit 3.4-13AB. An average riprap size of 40 inches is at the outlet.

CGC-2 consists of two 84-inch diameter CMP culverts which discharge into the channel of the Price River. These culverts are adequately designed to convey the peak flow resulting from the 100-year, 6-hour precipitation event. An average riprap size of 30 inches is at the outlet.

3.4-6(4)AB Alternative Sediment Control Measures

Due to the desire to avoid redisturbance in a future phase of reclamation, the operational hydrology sedimentation ponds 011, 012A and 012B, and 013 were removed during the reclamation grading operations. Therefore, alternative sediment control measures were implemented during reclamation of the site to reduce the quantity of sediment yield from the area. These ASCMs include the following practices in varying degrees:

1. Placement of growth media,
2. Incorporation of hay mulch into the growth media,
3. Deep gouging of the growth media,
4. Seeding the prepared soil,
5. Addition of more mulch following seeding, and
6. Chemically anchoring the final mulch layer.

Based on Simons, Li & Associates (1983), these methods constitute some of the best available control technology for the purpose of mining reclamation. These methods have been very successful at recently reclaimed sites and are expected to work well an this site.

Mechanical treatment of slopes was by deep gouging the soil to a depth of 18" to 24". Mulch was applied at the rate of 2,000 pounds per acre. Upon completion of the grading and mechanical treatment of the soil, the reclaimed area was seeded with grasses, shrubs and forbs. Seeding was be performed in the spring of 2004. Areas in which the seed does not

germinate will be reseeded. Following seeding the area was straw mulched again at a rate of 1.5 tons per acre. The straw mulch was held in place with a tackifier.

The alternative sediment controls constructed during reclamation will be inspected quarterly or after every major storm event. Corrections to any weaknesses in the implementation of the sediment control plan will be remedied immediately to prevent future silt runoff into the Price River. Corrective action will be taken when a gully greater than nine inches in depth is created due to lack of vegetation establishment, or when the mulch and seed have been transported by wind or overland flow. Corrective action will consist of regrading of the ground surface only as necessary to fill in nine inch gullies caused by erosion, and reseeding and mulching, as warranted, to reestablish vegetation.

3.4-7 Reclamation Timeline

Demolition of the site began in the fall of 2003. Reclamation of the Refuse pile began during the fall of 2003. Final reclamation of the site was completed in spring of 2004. Monitoring of the site will continue until Phase III bond release.

3.4-8 Reclamation Bond Release

As a result of the Postmining land use change the Preparation Plant area was changed to have an industrial use. This area was sold to Price River Water Improvement District ("PRIWID"). As the land owner PRIWID intends to make improvements to their property. PMC has reclaimed the site according to the approved reclamation plan and is requesting Phase III bond release for the Preparation Plant Area. The land use for the Refuse Pile area was not changed, nor was the property sold. Thus, only phase I bond release is being requested for the Refuse Pile Area. Bond release calculations can be found in Attachment 3.

3.4.9 References

Barfield, B.J., R.C. Warner, and C.T. Haan. 1981. Applied Hydrology and Sedimentology for Disturbed Areas. Oklahoma Technical Press. Stillwater, Oklahoma.

Geocomp Corporation. 1992. GEOSLOPE, Version 5.0. Concord, MA.

Hawkins, R.H. and K.A. Marshall. 1979. Storm Hydrograph Program. Final Report to the Utah Division of Oil, Gas and Mining. Utah State University. Logan, Utah.

Hoek, Evert and John Bray. 1981. Rock Slope Engineering. Third edition. The Institute of Mining and Metallurgy. London.

Miller, J.F., R.H. Frederick, and R.J. Tracey. 1973. Precipitation-Frequency Atlas of the Western United States. Volume VI-Utah. National Oceanic and Atmospheric Administration. National Weather Service. Silver Spring, Maryland.

NAVFAC DM-7 Design Manual for Soil Mechanics, Foundations, and Earth Structures. 1971. Department of the Navy. Navy Facilities Engineering Command.

Simons, Li & Associates, Inc. September 1982. OSM/TR-82/2. Surface Mining Water Diversion Design Manual. Office of Surface Mining. Washington, D.C.

Searcy, J.K. 1967. Use of Riprap for Bank Protection. U.S. Department of Transportation, Bureau of Public Roads. U.S. Government Printing Office, Washington, D.C.

U.S. Department of Agriculture. 1997. NRCS National Engineering Handbook. Section 4 Hydrology. National Resource Conservation Service. Washington, D.C.

U.S. Soil Conservation Service. 1972. National Engineering Handbook: Section 4 - Hydrology. U.S. Government Printing Office. Washington, D.C.

TABLES

TABLE 3.4-6AB

**PREPARATION PLANT
RECLAMATION WATERSHED CHARACTERISTICS**

WATERSHED (CGRWS-)	CURVE NUMBER	TIME OF CONCENTRATION (hr)	DRAINAGE AREA (acres)	PEAK FLOW (cfs)[a]
1	71	0.463	263.49	31.19
2	75	0.100	11.19	4.13
3	75	0.081	5.22	1.99
4	75	0.073	4.74	1.84
5	75	0.081	6.10	2.33
6	71	0.108	3.02	0.08
7	87	0.160	4.81	1.96
8	88	0.259	6.68	2.71
9	76	0.180	19.1	1.32
10	83	0.043	3.92	1.22

(a) Peak flows based on the following design events:

10-year, 6-hour	100-year, 6-hour
CGRWS-6	CGRWS-1
CGRWS-7	CGRWS-2
CGRWS-8	CGRWS-3
CGRWS-9	CGRWS-4
CGRWS-10	CGRWS-5

TABLE 3.4-7AB

AS-BUILT RECLAMATION DITCH DESIGN SUMMARY

Diversion Ditch (CGRD-)	Design Flow (cfs)	Minimum Conditions				Calculation Results		Min. Design Requirements	
		Bottom Width (ft)[a]	Side Slopes (ft)	Max. Bottom Slope (%)	Min. Bottom Slope (%)	Max. Velocity (ft/s)	Max. Flow Depth (ft)	Channel Depth (ft)	Riprap D_{50} (in) [c]
1	31.19	10	2:1	30.9	3.0	7.42	0.62	1.42	12
2	4.13	6	2.73:1	21.9	10.5	4.07	0.18	0.92	6
3 (MS)[b]	1.99	3.5	2.25:1	12.0	7.0	3.73	0.16	1.0	None
3 (SS)[b]	1.99	4.5	2.45:1	22.7	7.1	3.44	0.16	0.92	6
4 (MS)[b]	1.84	10	2.5:1	10.3	4.0	2.40	0.10	1.0	none
4 (SS)[b]	1.84	4.0	2.4:1	43.1	15.4	3.99	0.13	0.83	6
5 (MS)[b]	2.33	10.0	3:1	11.3	2.5	2.70	0.13	1.5	None
5 (SS)[b]	2.33	4.0	3:1	34.1	12.4	4.09	0.16	1.0	6
6	0.08	2.0	1:1	21.9	1.4	1.64	0.06	1.0	None
7	3.60	2.50	2.1:1	42.1	3.4	5.79	0.35	1.1	6
8	1.96	2.50	1.9:1	29.1	6.3	4.36	0.22	0.92	6
9	1.32	0	1:1 4.4:1	7.5	1.0	3.99	0.51	0.67	None
9a	1.32	2.75	2.6:1	55.9	4.8	4.18	0.17	0.75	6
10 [d]	1.10	0	1.5:1	8.3	4.4	4.38	0.69	1.0	None
10a	2.71	2.0	1.75:1	2.7	0.3	3.46	0.70	1.0	None
11	1.22	0	1.2:1 4:1	1.3	0.4	2.05	0.60	1.17	None

(a) Minimum bottom width measured at mlnimum depth from top of channel.
(b) MS = mild slope (no riprap), SS = steep slope (riprapped section).
(c) Riprap D_{50} calculated by using the Searcy method developed for the U.S. D.O.T.
(d) Channel dimensions represent the operational configuration. The watershed area changed and this calculation was done to verify that the operational channel was still adequate.

TABLE 3.4-8AB

AS-BUILT RECLAMATION CULVERT DESIGN SUMMARY

Culvert (CGC-)	Size and Type	Slope (%)	Peak Flow (cfs)	Outflow Velocity (ft/s)	Actual Outlet D_{50}[(a)] (in)
1	18" CMP	17	0.08	3.07	None Req'd
2	2-84" CMP	5	222.90	14.29	30
5	60" Concrete	10	32.52	20.37	40

(a) Actual riprap size exceeds minimum requirements under reclamation

Note: The above culverts are existing operational culverts that have been left in place to convey runoff from reclamation channels under the road and railroad tracks to the Price River. Greater detail about these culverts can be found on Table 3.4-3.

CGC-5 will be replaced by channel CGRD-1 up to the road where the inlet is assumed to be projecting for the inlet capacity estimate.

ATTACHMENT 1

AS-BUILT RECLAMATION HYDROLOGY CALCULATIONS

ATTACHMENT 1

AS-BUILT RECLAMATION HYDROLOGY CALCULATIONS

REGISTERED PROFESSIONAL ENGINEER
8-9-05
No. 189797
LAYNE D.
JENSEN
STATE OF UTAH

As-Build Hydrology Calculations
Willow Creek Preparation Plant

The purpose of these calculations is to demonstrate that the constructed reclamation channels can handle the peak flow generated from the required storm event. Channels associated with the Refuse Pile are required to handle the 100-year 6-hour storm event. All other channels must be able to handle the 10-year 6-hour storm event. All channels will be shown to be capable of safely handling the design event.

To minimize confusion and ease review, watersheds and channels are labeled in the same manner as found in the design calculations in Appendix 3.4J.

Methodology

- Curve Number techniques of the U.S. SCS (1972)
- Triangular Unit Hydrograph approach of the U.S. SCS (1972) as programed by Hawkins and Marshall (1979)
- Drainage areas, slopes and hydraulic lengths determined from as-built aerial topography. See Exhibit 3.4-16ab for watershed location.

Rainfall Depths

10-year 6-hour	1.4 inches
100-year 6-hour	2.1 inches

Reclamation Curve Numbers

The curve number for each watershed is determined by an area weighted average between undisturbed and reclaimed areas. The same curve numbers for each vegetation type will be used as listed in Appendix 3.4D of Exhibit 19. Namely:

Conifer	CN = 65
Grassland Sage brush	CN = 70
Mixed Brush	CN = 75
Pinyon/Juniper	CN = 75
Disturbed	CN = 90
Reclaimed	CN = 75 See Exhibit 13, Appendix H-1, pg. 2
Paved	CN = 98

Willow Creek Prep Plant Reclamation Weighted Curve Numbers

Watershed	Undisturbed		Reclaimed		Disturbed.		Weighted
Area (a)	Area (ac.)	CN *	Area (ac.)	CN	Area (ac.)	CN #	CN (b)
CGRWS-1	237.58	71	25.91	75	0	90	71
CGRWS-2	11.07	75	0.12	75	0	90	75
CGRWS-3	4.84	75	0.38	75	0	90	75
CGRWS-4	4.07	75	0.67	75	0	90	75
CGRWS-5	4.89	75	1.21	75	0	90	75
CGRWS-6	2.63	70	0.39	75	0	90	71
CGRWS-7	0	75	0.95	75	3.86	90	87
CGRWS-8	0	75	1.58	75	5.1	92	88
CGRWS-9	7.03	75	10.78	75	1.29	93	76
CGRWS-10	1.88	75	1.87	75	1.89	98	83

Notes

a See Exhibit 3.4-11 for watershed locations

b Weighted CN = (CN1)(A1)+(CN2)(A2)+(CN3)(A3)+(CN4)(A4) / (A1+A2+A3+A4)

* Represents an area weighted average of vegetation types in undisturbed areas.

\# Represents an area weighted average of paved and disturbed areas or areas that were previously disturbed but revegetated with time.

Castle Gate Preparation Plant
Summary of Watershed Data

Watershed Area	Drainage Area (ac)	Curve Number	S (in)	Y (%)	l (ft)	L (hr)	Time of Conc. (hr)	Peak Flow (cfs)
CGRWS-1	263.49	71	4.085	64	8175	0.277	0.463	31.19
CGRWS-2	11.19	75	3.333	90	1725	0.060	0.100	4.13
CGRWS-3	5.22	75	3.333	83.6	1265	0.049	0.081	1.99
CGRWS-4	4.74	75	3.333	96.6	1201	0.043	0.073	1.84
CGRWS-5	6.1	75	3.333	72.7	1145	0.048	0.081	2.33
CGRWS-6	3.02	71	4.085	62	1294	0.064	0.108	0.08
CGRWS-7	4.81	87	1.494	10	1272	0.096	0.160	1.96
CGRWS-8	6.68	88	1.364	14.6	3072	0.155	0.259	2.71
CGRWS-9	19.1	76	3.158	36.4	2100	0.108	0.180	1.32
CGRWS-10	3.92	83	2.048	45.7	532	0.026	0.043	1.22

Notes

Watershed locations can be found on Exhibit 3.4-11 and attached map.
S = 1000/CN - 10
Y = average watershed slope = (length of contour lines)(contour interval)/(watershed area)
l = hydraulic length
L = watershed lag =(l^0.8(S+1)^0.7) / (1900(Y)^0.5)
Time of Concentration + 1.67L
Peak Flow is based on a 100-year 6-hour storm event for CGRWS-1 through 5 and a 10-year 6-hour storm for the remaining watersheds

Triangular Hydrograph Calculations using

SCSHYDRO Program

Watershed I.D.:
CGRWS-1 100-YEAR 6 HOUR

INPUT SUMMARY

STORM :	WATERSHED :
Dist.= SCS Type `b'	Area = 263.49 acres
Depth = 2.10 inches	CN = 71.00
Duration = 6.0 hrs	Time conc.= 0.46 hrs

OUTPUT SUMMARY

Runoff depth: 0.307 inches
Initial abstr: 0.817 inches
Peak flow: 31.19 cfs (0.117 iph)
at time: 2.901 hrs

Triangular Hydrograph Calculations using

SCSHYDRO Program

Watershed I.D.:
CGRWS-2 100-YEAR 6 HOUR

INPUT SUMMARY

STORM :	WATERSHED :
Dist.= SCS Type `b'	Area = 11.19 acres
Depth = 2.10 inches	CN = 75.00
Duration = 6.0 hrs	Time conc.= 0.10 hrs

OUTPUT SUMMARY

Runoff depth: 0.431 inches
Initial abstr: 0.667 inches
Peak flow: 4.13 cfs (0.366 iph)
at time: 2.520 hrs

Triangular Hydrograph Calculations using

SCSHYDRO Program

Watershed I.D.:
CGRWS-3 100-YEAR 6 HOUR

INPUT SUMMARY

STORM :	WATERSHED :
Dist.= SCS Type `b'	Area = 5.22 acres
Depth = 2.10 inches	CN = 75.00
Duration = 6.0 hrs	Time conc.= 0.08 hrs

OUTPUT SUMMARY

Runoff depth: 0.431 inches
Initial abstr: 0.667 inches
Peak flow: 1.99 cfs (0.379 iph)
at time: 2.516 hrs

Triangular Hydrograph Calculations using

SCSHYDRO Program

Watershed I.D.:
CGRWS-4 100-YEAR 6 HOUR

INPUT SUMMARY

STORM :	WATERSHED :
Dist.= SCS Type `b'	Area = 4.74 acres
Depth = 2.10 inches	CN = 75.00
Duration = 6.0 hrs	Time conc.= 0.07 hrs

OUTPUT SUMMARY

Runoff depth: 0.431 inches
Initial abstr: 0.667 inches
Peak flow: 1.84 cfs (0.384 iph)
at time: 2.511 hrs

Triangular Hydrograph Calculations using

SCSHYDRO Program

Watershed I.D.:
CGRWS-5 100-YEAR 6 HOUR

INPUT SUMMARY

STORM :	WATERSHED :
Dist.= SCS Type `b'	Area = 6.10 acres
Depth = 2.10 inches	CN = 75.00
Duration = 6.0 hrs	Time conc.= 0.08 hrs

OUTPUT SUMMARY

Runoff depth: 0.431 inches
Initial abstr: 0.667 inches
Peak flow: 2.33 cfs (0.379 iph)
at time: 2.516 hrs

Triangular Hydrograph Calculations using

SCSHYDRO Program

Watershed I.D.:
CGRWS-6 10-YEAR 6 HOUR

INPUT SUMMARY

STORM :	WATERSHED :
Dist.= SCS Type `b'	Area = 3.02 acres
Depth = 1.40 inches	CN = 71.00
Duration = 6.0 hrs	Time conc.= 0.11 hrs

OUTPUT SUMMARY

Runoff depth: 0.073 inches
Initial abstr: 0.817 inches
Peak flow: 0.08 cfs (0.026 iph)
at time: 3.528 hrs

Triangular Hydrograph Calculations using

SCSHYDRO Program

Watershed I.D.:
CGRWS-7 10-YEAR 6 HOUR

INPUT SUMMARY

STORM :	WATERSHED :
Dist.= SCS Type `b'	Area = 4.81 acres
Depth = 1.40 inches	CN = 87.00
Duration = 6.0 hrs	Time conc.= 0.16 hrs

OUTPUT SUMMARY

Runoff depth: 0.467 inches
Initial abstr: 0.299 inches
Peak flow: 1.96 cfs (0.405 iph)
at time: 2.539 hrs

Triangular Hydrograph Calculations using

SCSHYDRO Program

Watershed I.D.:
CGRWS-8 10-YEAR 6-HOUR

INPUT SUMMARY

STORM :	WATERSHED :
Dist.= SCS Type `b'	Area = 6.68 acres
Depth = 1.40 inches	CN = 88.00
Duration = 6.0 hrs	Time conc.= 0.26 hrs

OUTPUT SUMMARY

Runoff depth: 0.510 inches
Initial abstr: 0.273 inches
Peak flow: 2.71 cfs (0.402 iph)
at time: 2.590 hrs

Triangular Hydrograph Calculations using

SCSHYDRO Program

Watershed I.D.:
CGRWS-9 10-YEAR 6 HOUR

INPUT SUMMARY

STORM :	WATERSHED :
Dist.= SCS Type `b'	Area = 19.10 acres
Depth = 1.40 inches	CN = 76.00
Duration = 6.0 hrs	Time conc.= 0.18 hrs

OUTPUT SUMMARY

Runoff depth: 0.150 inches
Initial abstr: 0.632 inches
Peak flow: 1.32 cfs (0.068 iph)
at time: 2.616 hrs

Triangular Hydrograph Calculations using

SCSHYDRO Program

Watershed I.D.:
CGRWS-10 10-YEAR 6 HOUR

INPUT SUMMARY

STORM :	WATERSHED :
Dist.= SCS Type `b'	Area = 3.92 acres
Depth = 1.40 inches	CN = 83.00
Duration = 6.0 hrs	Time conc.= 0.04 hrs

OUTPUT SUMMARY

Runoff depth: 0.323 inches
Initial abstr: 0.410 inches
Peak flow: 1.22 cfs (0.309 iph)
at time: 2.505 hrs

Channel Verification

Assumptions

1. All channels related to the Refuse Pile are verified for the 100-year 6-hour storm event. All other channels are verified for the 10-year 6-hour storm event,

2. When determining the adequacy of the riprap the method presented by Searcy, (1967) will be used,

3. Riprap thickness is twice the D_{50},

4. A Mannings n for riprap channels will be determined using the method presented by Abt, S.R., et. al. (1987)

$$n = 0.0456(D_{50} \times \text{Slope})^{0.159}$$

Where: D50 = median riprap size (inches)
Slope = (ft\ft)

5. A Mannings n for rocky ground will be assumed to be 0.035. The Mannings n for bare ground will be assumed to be 0.030

6. The channels are verified by assessing the erosional stability at the maximum slope and the capacity of the channel at the minimum slope.

The channels were measured in the fall of 2004. The channels were measured at the location of the minimum flow area. Thus, the channels typically have a greater capacity than indicated in this calculation. Calculation sheets can be found on pages 16 to 47 with a summary on page 15.

Channel cross-sections for each of the channels can be found on pages 48 through 63. Channel profiles can be found on Exhibit 3.4-15ab.

AS-BUILT RECLAMATION DITCH DESIGN SUMMARY

Diversion Ditch (CGRD-)	Design Flow (cfs)	Minimum Conditions				Calculation Results		Min. Design Requirements	
		Bottom Width (ft)[a]	Side Slopes (ft)	Max. Bottom Slope (%)	Min. Bottom Slope (%)	Max. Velocity (ft/s)	Max. Flow Depth (ft)	Channel Depth (ft)	Riprap D_{50} (in) [c]
1	31.19	10	2:1	30.9	3.0	7.42	0.62	1.42	12
2	4.13	6	2.73:1	21.9	10.5	4.07	0.18	0.92	6
3 (MS)[b]	1.99	3.5	2.25:1	12.0	7.0	3.73	0.16	1.0	None
3 (SS)[b]	1.99	4.5	2.45:1	22.7	7.1	3.44	0.16	0.92	6
4 (MS)[b]	1.84	10	2.5:1	10.3	4.0	2.40	0.10	1.0	none
4 (SS)[b]	1.84	4.0	2.4:1	43.1	15.4	3.99	0.13	0.83	6
5 (MS)[b]	2.33	10.0	3:1	11.3	2.5	2.70	0.13	1.5	None
5 (SS)[b]	2.33	4.0	3:1	34.1	12.4	4.09	0.16	1.0	6
6	0.08	2.0	1:1	21.9	1.4	1.64	0.06	1.0	None
7	3.60	2.50	2.1:1	42.1	3.4	5.79	0.35	1.1	6
8	1.96	2.50	1.9:1	29.1	6.3	4.36	0.22	0.92	6
9	1.32	0	1:1 4.4:1	7.5	1.0	3.99	0.51	0.67	None
9a	1.32	2.75	2.6:1	55.9	4.8	4.18	0.17	0.75	6
10 [d]	1.10	0	1.5:1	8.3	4.4	4.38	0.69	1.0	None
10a	2.71	2.0	1.75:1	2.7	0.3	3.46	0.70	1.0	None
11	1.22	0	1.2:1 4:1	1.3	0.4	2.05	0.60	1.17	None

(a) Minimum bottom width measured at mlnimum depth from top of channel.
(b) MS = mild slope (no riprap), SS = steep slope (riprapped section).
(c) Riprap D_{50} calculated by using the Searcy method developed for the U.S. D.O.T.
(d) Channel dimensions represent the operational configuration. The watershed area changed and this calculation was done to verify that the operational channel was still adequate.

CGRD-1 MINIMUM SLOPE
Worksheet for Trapezoidal Channel

Project Description	
Worksheet	Willow Creek Prep I
Flow Element	Trapezoidal Chann
Method	Manning's Formula
Solve For	Channel Depth

Input Data		
Mannings Coeffic	0.039	D_{50} = 12" Slope = 3%
Slope	0.030000	ft/ft
Left Side Slope	2.00	H : V
Right Side Slope	2.00	H : V
Bottom Width	10.00	ft
Discharge	31.19	cfs

Results		
Depth	0.62	ft < 1.42 ft freeboard = 0.8'
Flow Area	7.0	ft²
Wetted Perim	12.79	ft
Top Width	12.50	ft
Critical Depth	0.64	ft
Critical Slope	0.027211	ft/ft
Velocity	4.45	ft/s
Velocity Head	0.31	ft
Specific Energ	0.93	ft
Froude Numb	1.05	
Flow Type	Supercritical	

CGRD-1 MAXIMUM SLOPE
Worksheet for Trapezoidal Channel

Project Description	
Worksheet	Willow Creek Prep I
Flow Element	Trapezoidal Channe
Method	Manning's Formula
Solve For	Channel Depth

Input Data		
Mannings Coeffic	0.056	
Slope	0.309000	ft/ft
Left Side Slope	2.00	H : V
Right Side Slope	2.00	H : V
Bottom Width	10.00	ft
Discharge	31.19	cfs

$D_{50} = 12''$ Slope = 30.9 % $n = 0.0456(12 \times 0.309)^{0.159} = 0.056$

Results		
Depth	0.39	ft
Flow Area	4.2	ft²
Wetted Perim	11.74	ft
Top Width	11.56	ft
Critical Depth	0.64	ft
Critical Slope	0.056887	ft/ft
Velocity	7.42	ft/s
Velocity Head	0.86	ft
Specific Energ	1.25	ft
Froude Numb	2.17	
Flow Type	Supercritical	

< 10.7 fps

CGRD-2 MINIMUM SLOPE
Worksheet for Trapezoidal Channel

Project Description	
Worksheet	Willow Creek Prep I
Flow Element	Trapezoidal Channe
Method	Manning's Formula
Solve For	Channel Depth

Input Data		
Mannings Coeffic	0.042	$D_{50} = 6''$
Slope	0.105000	ft/ft
Left Side Slope	2.73	H : V
Right Side Slope	2.73	H : V
Bottom Width	6.00	ft
Discharge	4.13	cfs

Results		
Depth	0.18	ft < 0.92' ∴ or freeboard = 0.74 ft
Flow Area	1.2	ft²
Wetted Perim	7.07	ft
Top Width	7.00	ft
Critical Depth	0.24	ft
Critical Slope	0.044381	ft/ft
Velocity	3.47	ft/s
Velocity Head	0.19	ft
Specific Energ	0.37	ft
Froude Numb	1.48	
Flow Type	Supercritical	

CGRD-2 MAXIMUM SLOPE
Worksheet for Trapezoidal Channel

Project Description	
Worksheet	Willow Creek Prep I
Flow Element	Trapezoidal Chann
Method	Manning's Formula
Solve For	Channel Depth

Input Data		
Mannings Coeffic	0.048	$D_{50} = 6''$
Slope	0.219000	ft/ft
Left Side Slope	2.73	H : V
Right Side Slope	2.73	H : V
Bottom Width	6.00	ft
Discharge	4.13	cfs

Results		
Depth	0.16	ft
Flow Area	1.0	ft²
Wetted Perim	6.92	ft
Top Width	6.86	ft
Critical Depth	0.24	ft
Critical Slope	0.055934	ft/ft
Velocity	4.07	ft/s < 7.5 fps ∴ ok
Velocity Head	0.26	ft
Specific Energ	0.41	ft
Froude Numb	1.86	
Flow Type	Supercritical	

CGRD-3 (MS) MINIMUM SLOPE
Worksheet for Trapezoidal Channel

Project Description	
Worksheet	Willow Creek Prep I
Flow Element	Trapezoidal Chann
Method	Manning's Formula
Solve For	Channel Depth

Input Data		
Mannings Coeffic	0.035	rocky ground
Slope	0.070000	ft/ft
Left Side Slope	2.25	H : V
Right Side Slope	2.25	H : V
Bottom Width	3.50	ft
Discharge	1.99	cfs

Results		
Depth	0.16	ft <1.0 Fr ok freeboard = 0.84 ft
Flow Area	0.6	ft²
Wetted Perim	4.31	ft
Top Width	4.24	ft
Critical Depth	0.21	ft
Critical Slope	0.032185	ft/ft
Velocity	3.13	ft/s
Velocity Head	0.15	ft
Specific Energ	0.32	ft
Froude Numb	1.43	
Flow Type	Supercritical	

CGRD-3 (MS) MAXIMUM SLOPE
Worksheet for Trapezoidal Channel

Project Description	
Worksheet	Willow Creek Prep I
Flow Element	Trapezoidal Chann
Method	Manning's Formula
Solve For	Channel Depth

Input Data		
Mannings Coeffic	0.035	rocky ground
Slope	0.120000	ft/ft
Left Side Slope	2.25	H : V
Right Side Slope	2.25	H : V
Bottom Width	3.50	ft
Discharge	1.99	cfs

Results		
Depth	0.14	ft
Flow Area	0.5	ft²
Wetted Perim	4.19	ft
Top Width	4.13	ft
Critical Depth	0.21	ft
Critical Slope	0.032185	ft/ft
Velocity	3.73	ft/s < 5 ft/s ∴ ok
Velocity Head	0.22	ft
Specific Energ	0.36	ft
Froude Numb	1.83	
Flow Type	Supercritical	

© Haestad Methods, Inc.
EarthFax Engineering Inc
37 Brookside Road Waterbury, CT 06708 USA (203) 755-1666

CGRD-3 (SS) MINIMUM SLOPE
Worksheet for Trapezoidal Channel

Project Description	
Worksheet	Willow Creek Prep I
Flow Element	Trapezoidal Chann
Method	Manning's Formula
Solve For	Channel Depth

Input Data		
Mannings Coeffic	0.040	$D_{50} = 6$
Slope	0.071000	ft/ft
Left Side Slope	2.45	H : V
Right Side Slope	2.45	H : V
Bottom Width	4.00	ft
Discharge	1.99	cfs

Results		
Depth	0.16	ft
Flow Area	0.7	ft²
Wetted Perim	4.86	ft
Top Width	4.80	ft
Critical Depth	0.19	ft
Critical Slope	0.042364	ft/ft
Velocity	2.78	ft/s
Velocity Head	0.12	ft
Specific Energ	0.28	ft
Froude Numb	1.27	
Flow Type	Supercritical	

< 0.92 ∴ ok freeboard = 0.76 ft

© Haestad Methods, Inc.
EarthFax Engineering Inc
37 Brookside Road Waterbury, CT 06708 USA (203) 755-1666

CGRD-3 (SS) MAXIMUM SLOPE
Worksheet for Trapezoidal Channel

Project Description	
Worksheet	Willow Creek Prep I
Flow Element	Trapezoidal Chann
Method	Manning's Formula
Solve For	Channel Depth

Input Data		
Mannings Coeffic	0.048	D_{50} = 6"
Slope	0.227000	ft/ft
Left Side Slope	2.45	H : V
Right Side Slope	2.45	H : V
Bottom Width	4.50	ft
Discharge	1.99	cfs

Results		
Depth	0.12	ft
Flow Area	0.6	ft²
Wetted Perim	5.14	ft
Top Width	5.09	ft
Critical Depth	0.18	ft
Critical Slope	0.062349	ft/ft
Velocity	3.44	ft/s < 7.5 ft/s ∴ ok
Velocity Head	0.18	ft
Specific Energ	0.30	ft
Froude Numb	1.80	
Flow Type	Supercritical	

© Haestad Methods, Inc.
EarthFax Engineering Inc
37 Brookside Road Waterbury, CT 06708 USA (203) 755-1666

CGRD-4 (MS) MINIMUM SLOPE
Worksheet for Trapezoidal Channel

Project Description	
Worksheet	Willow Creek Prep I
Flow Element	Trapezoidal Chann
Method	Manning's Formula
Solve For	Channel Depth

Input Data		
Mannings Coeffic	0.035	rocky ground
Slope	0.040000	ft/ft
Left Side Slope	2.50	H : V
Right Side Slope	2.50	H : V
Bottom Width	10.00	ft
Discharge	1.84	cfs

Results		
Depth	0.10	ft < 1.0 ft ∴ ok freeboard = 0.9 ft
Flow Area	1.0	ft²
Wetted Perim	10.54	ft
Top Width	10.50	ft
Critical Depth	0.10	ft
Critical Slope	0.038855	ft/ft
Velocity	1.80	ft/s
Velocity Head	0.05	ft
Specific Energ	0.15	ft
Froude Numb	1.01	
Flow Type	Supercritical	

© Haestad Methods, Inc.
EarthFax Engineering Inc
37 Brookside Road Waterbury, CT 06708 USA (203) 755-1666

CGRD-4 (MS) MAXIMUM SLOPE
Worksheet for Trapezoidal Channel

Project Description	
Worksheet	Willow Creek Prep I
Flow Element	Trapezoidal Channe
Method	Manning's Formula
Solve For	Channel Depth

Input Data		
Mannings Coeffic	0.035	rocky ground
Slope	0.103000	ft/ft
Left Side Slope	2.50	H : V
Right Side Slope	2.50	H : V
Bottom Width	10.00	ft
Discharge	1.84	cfs

Results		
Depth	0.08	ft
Flow Area	0.8	ft²
Wetted Perim	10.41	ft
Top Width	10.38	ft
Critical Depth	0.10	ft
Critical Slope	0.038849	ft/ft
Velocity	2.40	ft/s < 5.0 ft/s ∴ ok
Velocity Head	0.09	ft
Specific Energ	0.16	ft
Froude Numb	1.55	
Flow Type	Supercritical	

© Haestad Methods, Inc.
EarthFax Engineering Inc
37 Brookside Road Waterbury, CT 06708 USA (203) 755-1666

CGRD-4 (SS) MINIMUM SLOPE
Worksheet for Trapezoidal Channel

Project Description	
Worksheet	Willow Creek Prep I
Flow Element	Trapezoidal Channe
Method	Manning's Formula
Solve For	Channel Depth

Input Data		
Mannings Coeffic	0.045	$D_{50} = 6''$
Slope	0.154000	ft/ft
Left Side Slope	2.40	H : V
Right Side Slope	2.40	H : V
Bottom Width	4.00	ft
Discharge	1.84	cfs

Results		
Depth	0.13	ft < 0.83 ok freeboard = 0.7 ft
Flow Area	0.6	ft²
Wetted Perim	4.69	ft
Top Width	4.64	ft
Critical Depth	0.18	ft
Critical Slope	0.055177	ft/ft
Velocity	3.19	ft/s
Velocity Head	0.16	ft
Specific Energ	0.29	ft
Froude Numb	1.60	
Flow Type	Supercritical	

© Haestad Methods, Inc.
EarthFax Engineering Inc
37 Brookside Road Waterbury, CT 06708 USA (203) 755-1666

CGRD-4 (SS) MAXIMUM SLOPE
Worksheet for Trapezoidal Channel

Project Description	
Worksheet	Willow Creek Prep I
Flow Element	Trapezoidal Chann
Method	Manning's Formula
Solve For	Channel Depth

Input Data		
Mannings Coeffic	0.053	$D_{50} = 6''$
Slope	0.431000	ft/ft
Left Side Slope	2.40	H : V
Right Side Slope	2.40	H : V
Bottom Width	4.00	ft
Discharge	1.84	cfs

Results		
Depth	0.11	ft
Flow Area	0.5	ft²
Wetted Perim	4.56	ft
Top Width	4.52	ft
Critical Depth	0.18	ft
Critical Slope	0.076203	ft/ft
Velocity	3.99	ft/s < 7.5 ft/s ∴ ok
Velocity Head	0.25	ft
Specific Energ	0.36	ft
Froude Numb	2.20	
Flow Type	Supercritical	

CGRD-5 (MS) MINIMUM SLOPE
Worksheet for Trapezoidal Channel

Project Description	
Worksheet	Willow Creek Prep I
Flow Element	Trapezoidal Channe
Method	Manning's Formula
Solve For	Channel Depth

Input Data		
Mannings Coeffic	0.035	rocky ground
Slope	0.025000	ft/ft
Left Side Slope	3.00	H : V
Right Side Slope	3.00	H : V
Bottom Width	10.00	ft
Discharge	2.33	cfs

Results		
Depth	0.13	ft < 1.5' ok freeboard = 1.37 ft
Flow Area	1.4	ft²
Wetted Perim	10.84	ft
Top Width	10.79	ft
Critical Depth	0.12	ft
Critical Slope	0.037016	ft/ft
Velocity	1.69	ft/s
Velocity Head	0.04	ft
Specific Energ	0.18	ft
Froude Numb	0.84	
Flow Type	Subcritical	

CGRD-5 (MS) MAXIMUM SLOPE
Worksheet for Trapezoidal Channel

Project Description	
Worksheet	Willow Creek Prep I
Flow Element	Trapezoidal Chann
Method	Manning's Formula
Solve For	Channel Depth

Input Data		
Mannings Coeffic	0.035	rocky gronnel
Slope	0.113000	ft/ft
Left Side Slope	3.00	H : V
Right Side Slope	3.00	H : V
Bottom Width	10.00	ft
Discharge	2.33	cfs

Results		
Depth	0.08	ft
Flow Area	0.9	ft²
Wetted Perim	10.53	ft
Top Width	10.51	ft
Critical Depth	0.12	ft
Critical Slope	0.037015	ft/ft
Velocity	2.70	ft/s < 5.0 fps ∴ ok
Velocity Head	0.11	ft
Specific Energ	0.20	ft
Froude Numb	1.66	
Flow Type	Supercritical	

© Haestad Methods, Inc.
EarthFax Engineering Inc
37 Brookside Road Waterbury, CT 06708 USA (203) 755-1666

CGRD-5 (SS) MINIMUM SLOPE
Worksheet for Trapezoidal Channel

Project Description	
Worksheet	Willow Creek Prep I
Flow Element	Trapezoidal Chann
Method	Manning's Formula
Solve For	Channel Depth

Input Data		
Mannings Coeffic	0.043	D_{50} = 6"
Slope	124000	ft/ft
Left Side Slope	3.00	H : V
Right Side Slope	3.00	H : V
Bottom Width	4.00	ft
Discharge	2.33	cfs

Results		
Depth	0.16	ft < 1.0' ∴ OK freeboard = 0.84 ft
Flow Area	0.7	ft²
Wetted Perim	5.00	ft
Top Width	4.95	ft
Critical Depth	0.21	ft
Critical Slope	0.049173	ft/ft
Velocity	3.28	ft/s
Velocity Head	0.17	ft
Specific Energ	0.33	ft
Froude Numb	1.53	
Flow Type	Supercritical	

CGRD-5 (SS) MAXIMUM SLOPE
Worksheet for Trapezoidal Channel

Project Description	
Worksheet	Willow Creek Prep I
Flow Element	Trapezoidal Chann
Method	Manning's Formula
Solve For	Channel Depth

Input Data		
Mannings Coeffic	0.051	D_{50} = 6"
Slope	0.341000	ft/ft
Left Side Slope	3.00	H : V
Right Side Slope	3.00	H : V
Bottom Width	4.00	ft
Discharge	2.33	cfs

Results		
Depth	0.13	ft
Flow Area	0.6	ft²
Wetted Perim	4.82	ft
Top Width	4.78	ft
Critical Depth	0.21	ft
Critical Slope	0.067903	ft/ft
Velocity	4.09	ft/s < 7.5 ft/s ∴ ok
Velocity Head	0.26	ft
Specific Energ	0.39	ft
Froude Numb	2.09	
Flow Type	Supercritical	

© Haestad Methods, Inc.
EarthFax Engineering Inc
37 Brookside Road Waterbury, CT 06708 USA (203) 755-1666
Project Engineer: Richard White

CGRD-6 MINIMUM SLOPE
Worksheet for Trapezoidal Channel

Project Description	
Worksheet	Willow Creek Prep I
Flow Element	Trapezoidal Chann
Method	Manning's Formula
Solve For	Channel Depth

Input Data		
Mannings Coeffic	0.035	rocky ground w/ vegetation
Slope	0.014000	ft/ft
Left Side Slope	1.00	H : V
Right Side Slope	1.00	H : V
Bottom Width	2.00	ft
Discharge	0.08	cfs

Results		
Depth	0.06	ft < 1.0 ft ∴ ok freeboard = 0.94 ft
Flow Area	0.1	ft²
Wetted Perim	2.16	ft
Top Width	2.11	ft
Critical Depth	0.04	ft
Critical Slope	0.055176	ft/ft
Velocity	0.71	ft/s
Velocity Head	0.01	ft
Specific Energ	0.06	ft
Froude Numb	0.54	
Flow Type	Subcritical	

CGRD-6 MAXIMUM SLOPE
Worksheet for Trapezoidal Channel

Project Description	
Worksheet	Willow Creek Prep I
Flow Element	Trapezoidal Chann
Method	Manning's Formula
Solve For	Channel Depth

Input Data		
Mannings Coeffic	0.035	rocky ground + vegetation
Slope	219000	ft/ft
Left Side Slope	1.00	H : V
Right Side Slope	1.00	H : V
Bottom Width	2.00	ft
Discharge	0.08	cfs

Results		
Depth	0.02	ft
Flow Area	4.9e-2	ft²
Wetted Perim	2.07	ft
Top Width	2.05	ft
Critical Depth	0.04	ft
Critical Slope	0.055173	ft/ft
Velocity	1.64	ft/s < 5 ft/s ∴ ok
Velocity Head	0.04	ft
Specific Energ	0.07	ft
Froude Numb	1.87	
Flow Type	Supercritical	

© Haestad Methods, Inc.
EarthFax Engineering Inc
37 Brookside Road Waterbury, CT 06708 USA (203) 755-1666

CGRD-7 MINIMUM SLOPE
Worksheet for Trapezoidal Channel

Project Description	
Worksheet	Willow Creek Prep I
Flow Element	Trapezoidal Channe
Method	Manning's Formula
Solve For	Channel Depth

Input Data		
Mannings Coeffic	0.036	D_{50} = 6"
Slope	0.034000	ft/ft
Left Side Slope	2.10	H : V
Right Side Slope	2.10	H : V
Bottom Width	2.50	ft
Discharge	3.60	cfs

Results		
Depth	0.35	ft < 1.1' ∴ ok freeboard = 0.75 ft
Flow Area	1.1	ft²
Wetted Perim	4.11	ft
Top Width	3.95	ft
Critical Depth	0.36	ft
Critical Slope	0.029339	ft/ft
Velocity	3.23	ft/s
Velocity Head	0.16	ft
Specific Energ	0.51	ft
Froude Numb	1.07	
Flow Type	Supercritical	

© Haestad Methods, Inc.
EarthFax Engineering Inc
37 Brookside Road Waterbury, CT 06708 USA (203) 755-1666

CGRD-7 MAXIMUM SLOPE
Worksheet for Trapezoidal Channel

Project Description	
Worksheet	Willow Creek Prep I
Flow Element	Trapezoidal Chann
Method	Manning's Formula
Solve For	Channel Depth

Input Data		
Mannings Coeffic	0.053	D_{50}=6"
Slope	0.421000	ft/ft
Left Side Slope	2.10	H : V
Right Side Slope	2.10	H : V
Bottom Width	2.50	ft
Discharge	3.60	cfs

Results		
Depth	0.21	ft
Flow Area	0.6	ft²
Wetted Perim	3.48	ft
Top Width	3.39	ft
Critical Depth	0.36	ft
Critical Slope	0.064537	ft/ft
Velocity	5.79	ft/s < 7.5 ft/s ∴ ok
Velocity Head	0.52	ft
Specific Energ	0.73	ft
Froude Numb	2.38	
Flow Type	Supercritical	

CGRD-8 MINIMUM SLOPE
Worksheet for Trapezoidal Channel

Project Description	
Worksheet	Willow Creek Prep I
Flow Element	Trapezoidal Channe
Method	Manning's Formula
Solve For	Channel Depth

Input Data		
Mannings Coeffic	0.039	$D_{50} = 6''$
Slope	0.063000	ft/ft
Left Side Slope	1.90	H : V
Right Side Slope	1.90	H : V
Bottom Width	2.50	ft
Discharge	1.96	cfs

Results		
Depth	0.22	ft < 0.92 ok freeboard = 0.7 ft
Flow Area	0.6	ft²
Wetted Perim	3.43	ft
Top Width	3.33	ft
Critical Depth	0.25	ft
Critical Slope	0.038735	ft/ft
Velocity	3.10	ft/s
Velocity Head	0.15	ft
Specific Energ	0.37	ft
Froude Numb	1.25	
Flow Type	Supercritical	

© Haestad Methods, Inc.
EarthFax Engineering Inc
37 Brookside Road Waterbury, CT 06708 USA (203) 755-1666

CGRD-8 MAXIMUM SLOPE
Worksheet for Trapezoidal Channel

Project Description	
Worksheet	Willow Creek Prep I
Flow Element	Trapezoidal Chann
Method	Manning's Formula
Solve For	Channel Depth

Input Data		
Mannings Coeffic	0.050	$D_{50} = 6''$
Slope	0.291000	ft/ft
Left Side Slope	1.90	H : V
Right Side Slope	1.90	H : V
Bottom Width	2.50	ft
Discharge	1.96	cfs

Results		
Depth	0.16	ft
Flow Area	0.4	ft²
Wetted Perim	3.19	ft
Top Width	3.11	ft
Critical Depth	0.25	ft
Critical Slope	0.063159	ft/ft
Velocity	4.36	ft/s < 7.5 ft/s ∴ ok
Velocity Head	0.30	ft
Specific Energ	0.46	ft
Froude Numb	2.02	
Flow Type	Supercritical	

© Haestad Methods, Inc.
EarthFax Engineering Inc
37 Brookside Road Waterbury, CT 06708 USA (203) 755-1666

CGRD-9 MINIMUM SLOPE
Worksheet for Trapezoidal Channel

Project Description	
Worksheet	Willow Creek Prep I
Flow Element	Trapezoidal Chann
Method	Manning's Formula
Solve For	Channel Depth

Input Data		
Mannings Coeffic	0.030	bare ground
Slope	0.010000	ft/ft
Left Side Slope	1.00	H : V
Right Side Slope	4.40	H : V
Bottom Width	0.00	ft
Discharge	1.32	cfs

Results		
Depth	0.51	ft < 0.67 ft ok freeboard = 0.16 ft
Flow Area	0.7	ft²
Wetted Perim	3.03	ft
Top Width	2.76	ft
Critical Depth	0.43	ft
Critical Slope	0.024765	ft/ft
Velocity	1.87	ft/s
Velocity Head	0.05	ft
Specific Energ	0.57	ft
Froude Numb	0.65	
Flow Type	Subcritical	

minimum depth occurs in an area of steeper slope and with less than half the flow. Thus, it is better than it looks.

© Haestad Methods, Inc.
EarthFax Engineering Inc
37 Brookside Road Waterbury, CT 06708 USA (203) 755-1666

CGRD-9 MAXIMUM SLOPE
Worksheet for Trapezoidal Channel

Project Description	
Worksheet	Willow Creek Prep I
Flow Element	Trapezoidal Chann
Method	Manning's Formula
Solve For	Channel Depth

Input Data		
Mannings Coeffic	0.030	bare ground
Slope	0.075000	ft/ft
Left Side Slope	1.00	H : V
Right Side Slope	4.40	H : V
Bottom Width	0.00	ft
Discharge	1.32	cfs

Results		
Depth	0.35	ft
Flow Area	0.3	ft²
Wetted Perim	2.07	ft
Top Width	1.89	ft
Critical Depth	0.43	ft
Critical Slope	0.024765	ft/ft
Velocity	3.99	ft/s < 5.0 ft/s ∴ ok
Velocity Head	0.25	ft
Specific Energ	0.60	ft
Froude Numb	1.68	
Flow Type	Supercritical	

© Haestad Methods, Inc.
EarthFax Engineering Inc
37 Brookside Road Waterbury, CT 06708 USA (203) 755-1666

CGRD-9a MINIMUM SLOPE
Worksheet for Trapezoidal Channel

Project Description	
Worksheet	Willow Creek Prep I
Flow Element	Trapezoidal Chann
Method	Manning's Formula
Solve For	Channel Depth

Input Data		
Mannings Coeffic	0.038	$D_{50} = 6''$
Slope	048000	ft/ft
Left Side Slope	2.60	H : V
Right Side Slope	2.60	H : V
Bottom Width	2.75	ft
Discharge	1.32	cfs

Results		
Depth	0.17	ft < 0.75 ok freeboard = 0.58 ft
Flow Area	0.5	ft²
Wetted Perim	3.70	ft
Top Width	3.64	ft
Critical Depth	0.18	ft
Critical Slope	0.038803	ft/ft
Velocity	2.42	ft/s
Velocity Head	0.09	ft
Specific Energ	0.26	ft
Froude Numb	1.10	
Flow Type	Supercritical	

CGRD-9a MAXIMUM SLOPE
Worksheet for Trapezoidal Channel

Project Description	
Worksheet	Willow Creek Prep I
Flow Element	Trapezoidal Channe
Method	Manning's Formula
Solve For	Channel Depth

Input Data		
Mannings Coeffic	0.055	D_{50} = 6"
Slope	0.559000	ft/ft
Left Side Slope	2.60	H : V
Right Side Slope	2.60	H : V
Bottom Width	2.75	ft
Discharge	1.32	cfs

Results		
Depth	0.10	ft
Flow Area	0.3	ft²
Wetted Perim	3.33	ft
Top Width	3.29	ft
Critical Depth	0.18	ft
Critical Slope	0.084382	ft/ft
Velocity	4.18	ft/s < 7.5 ft/s ∴ ok
Velocity Head	0.27	ft
Specific Energ	0.38	ft
Froude Numb	2.38	
Flow Type	Supercritical	

© Haestad Methods, Inc.
EarthFax Engineering Inc
37 Brookside Road Waterbury, CT 06708 USA (203) 755-1666

CGRD 10 MINIMUM SLOPE
Worksheet for Triangular Channel

Project Description	
Worksheet	Triangular Channe
Flow Element	Triangular Channe
Method	Manning's Formula
Solve For	Channel Depth

Input Data			
Mannings Coeffic	0.030	bare	earth
Slope	044000	ft/ft	4.4 %
Left Side Slope	1.50	V : H	
Right Side Slope	1.50	V : H	
Discharge	1.10	cfs	

Results			
Depth	0.69	ft	<1.0' ok
Flow Area	0.3	ft²	
Wetted Perim	1.66	ft	
Top Width	0.92	ft	
Critical Depth	0.70	ft	
Critical Slope	0.040812	ft/ft	
Velocity	3.45	ft/s	
Velocity Head	0.19	ft	
Specific Energ	0.88	ft	
Froude Numb	1.04		
Flow Type	Supercritical		

© Haestad Methods, Inc.
EarthFax Engineering Inc
37 Brookside Road Waterbury, CT 06708 USA (203) 755-1666

CGRD 10 MAXIMUM SLOPE
Worksheet for Triangular Channel

Project Description	
Worksheet	Triangular Channe
Flow Element	Triangular Channe
Method	Manning's Formula
Solve For	Channel Depth

Input Data			
Mannings Coeffic	0.030	bare earth	
Slope	083000	ft/ft	8.3 %
Left Side Slope	1.50	V : H	
Right Side Slope	1.50	V : H	
Discharge	1.10	cfs	

Results			
Depth	0.61	ft	
Flow Area	0.3	ft²	
Wetted Perim	1.47	ft	
Top Width	0.82	ft	
Critical Depth	0.70	ft	
Critical Slope	0.040812	ft/ft	
Velocity	4.38	ft/s	< 5.0 fps ∴ ok
Velocity Head	0.30	ft	
Specific Energ	0.91	ft	
Froude Numb	1.39		
Flow Type	Supercritical		

CGRD-10A MINIMUM SLOPE
Worksheet for Trapezoidal Channel

Project Description	
Worksheet	Trapezoidal Channe
Flow Element	Trapezoidal Channe
Method	Manning's Formula
Solve For	Channel Depth

Input Data			
Mannings Coeffic	0.030		bare earth
Slope	0.003000	ft/ft	0.3%
Left Side Slope	1.75	V : H	
Right Side Slope	1.75	V : H	
Bottom Width	2.00	ft	
Discharge	2.71	cfs	

Results			
Depth	0.70	ft	< 1.0' ∴ ok
Flow Area	1.7	ft²	
Wetted Perim	3.60	ft	
Top Width	2.80	ft	
Critical Depth	0.37	ft	
Critical Slope	0.023400	ft/ft	
Velocity	1.62	ft/s	
Velocity Head	0.04	ft	
Specific Energ	0.74	ft	
Froude Numb	0.37		
Flow Type	Subcritical		

© Haestad Methods, Inc.
EarthFax Engineering Inc
37 Brookside Road Waterbury, CT 06708 USA (203) 755-1666

CGRD-10A MAXIMUM SLOPE
Worksheet for Trapezoidal Channel

Project Description	
Worksheet	Trapezoidal Chann
Flow Element	Trapezoidal Chann
Method	Manning's Formula
Solve For	Channel Depth

Input Data			
Mannings Coeffic	0.030	bare earth	
Slope	027000	ft/ft	2.7 %
Left Side Slope	1.75	V : H	
Right Side Slope	1.75	V : H	
Bottom Width	2.00	ft	
Discharge	2.71	cfs	

Results			
Depth	0.36	ft	
Flow Area	0.8	ft²	
Wetted Perim	2.82	ft	
Top Width	2.41	ft	
Critical Depth	0.37	ft	
Critical Slope	0.023400	ft/ft	
Velocity	3.46	ft/s	< 5.0' fps ∴ ok
Velocity Head	0.19	ft	
Specific Energ	0.54	ft	
Froude Numb	1.07		
Flow Type	Supercritical		

© Haestad Methods, Inc.
EarthFax Engineering Inc
37 Brookside Road Waterbury, CT 06708 USA (203) 755-1666

CGRD-11 MINIMUM SLOPE
Worksheet for Trapezoidal Channel

Project Description	
Worksheet	Willow Creek Prep I
Flow Element	Trapezoidal Chann
Method	Manning's Formula
Solve For	Channel Depth

Input Data		
Mannings Coeffic	0.030	bare ground
Slope	0.004000	ft/ft
Left Side Slope	1.20	H : V
Right Side Slope	4.00	H : V
Bottom Width	0.00	ft
Discharge	1.22	cfs

Results		
Depth	0.60	ft < 1.17 ft ∴ ok freeboard = 0.57 ft
Flow Area	0.9	ft²
Wetted Perim	3.39	ft
Top Width	3.10	ft
Critical Depth	0.42	ft
Critical Slope	0.024774	ft/ft
Velocity	1.32	ft/s
Velocity Head	0.03	ft
Specific Energ	0.62	ft
Froude Numb	0.43	
Flow Type	Subcritical	

CGRD-11 MAXIMUM SLOPE
Worksheet for Trapezoidal Channel

Project Description	
Worksheet	Willow Creek Prep I
Flow Element	Trapezoidal Chann
Method	Manning's Formula
Solve For	Channel Depth

Input Data		
Mannings Coeffic	0.030	bare ground
Slope	0.013000	ft/ft
Left Side Slope	1.20	H : V
Right Side Slope	4.00	H : V
Bottom Width	0.00	ft
Discharge	1.22	cfs

Results		
Depth	0.48	ft
Flow Area	0.6	ft²
Wetted Perim	2.72	ft
Top Width	2.49	ft
Critical Depth	0.42	ft
Critical Slope	0.024774	ft/ft
Velocity	2.05	ft/s < 5.0 ft/sec ∴ ok
Velocity Head	0.07	ft
Specific Energ	0.54	ft
Froude Numb	0.74	
Flow Type	Subcritical	

© Haestad Methods, Inc.
EarthFax Engineering Inc
37 Brookside Road Waterbury, CT 06708 USA (203) 755-1666

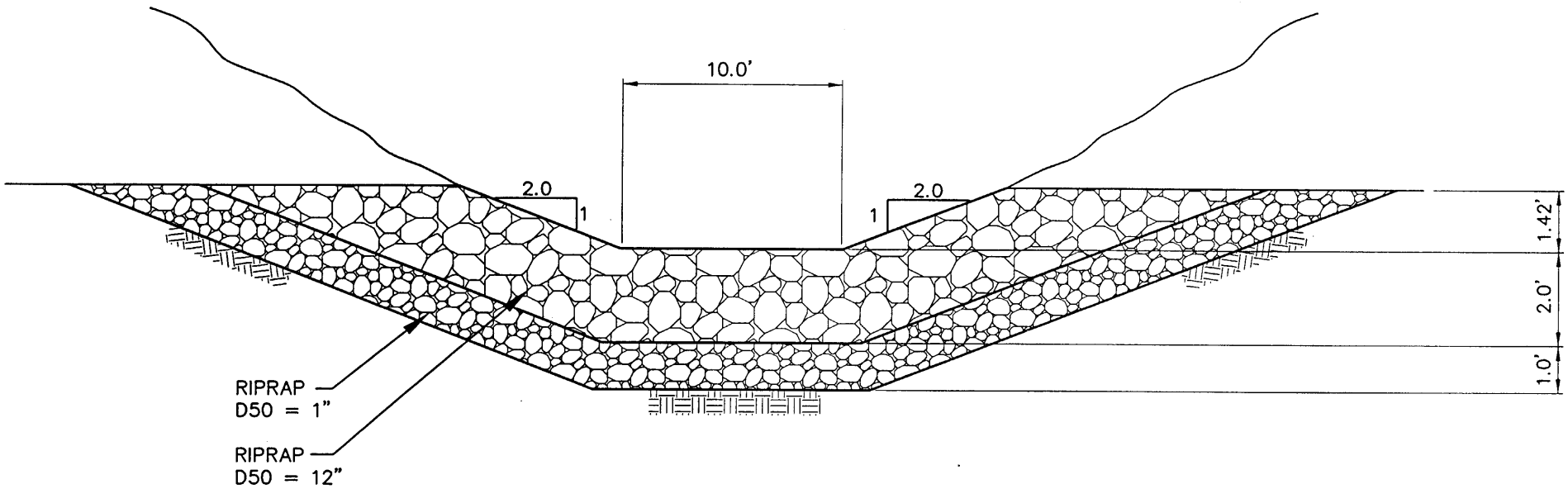

NO SCALE

CGRD-1 CHANNEL CROSS-SECTION

EarthFax

G:\UC709\23\HYDROLOGY\FIG-CGRD-1.DWG

48

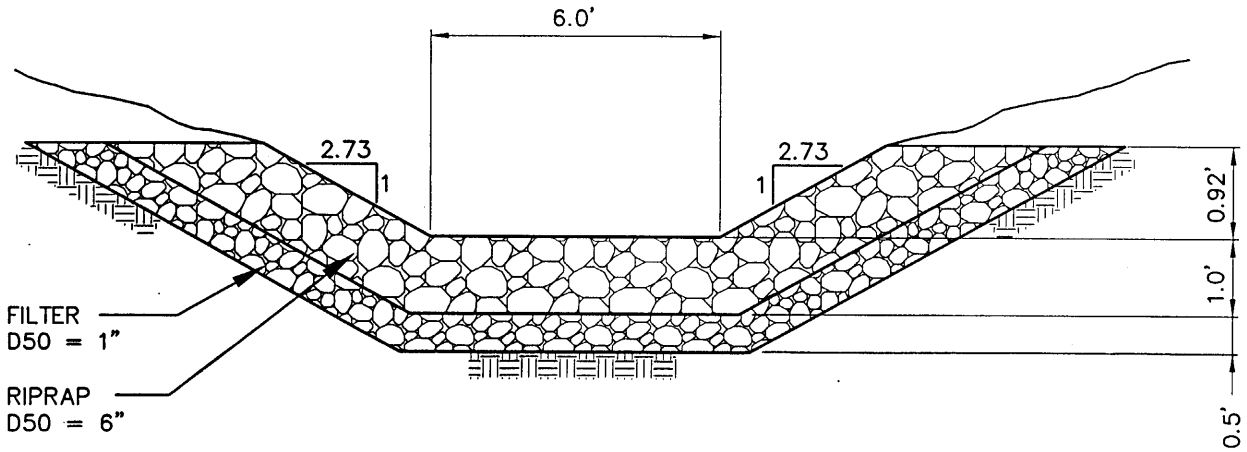

NO SCALE

CGRD-2 CHANNEL CROSS-SECTION

EarthFax

G:\UC709\23\HYDROLOGY\FIG-CGRD-2.DWG

49

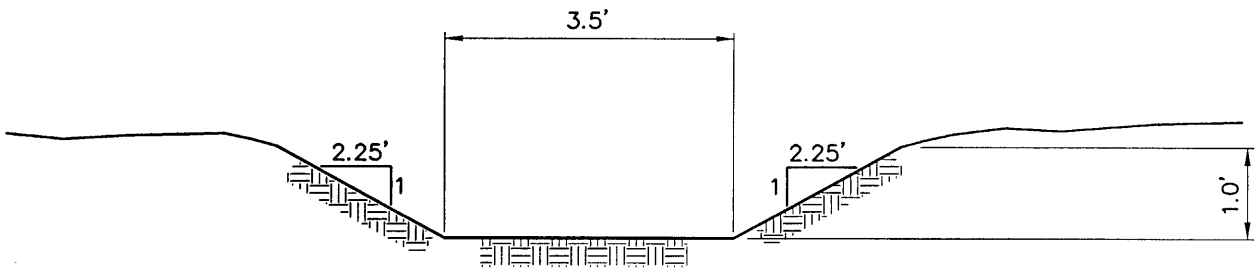

NO SCALE

CGRD-3 (NON-RIPRAPPED PORTION) CHANNEL CROSS-SECTION

EarthFax

G:\UC709\23\HYDROLOGY\FIG-CGRD-3MS.DWG

50

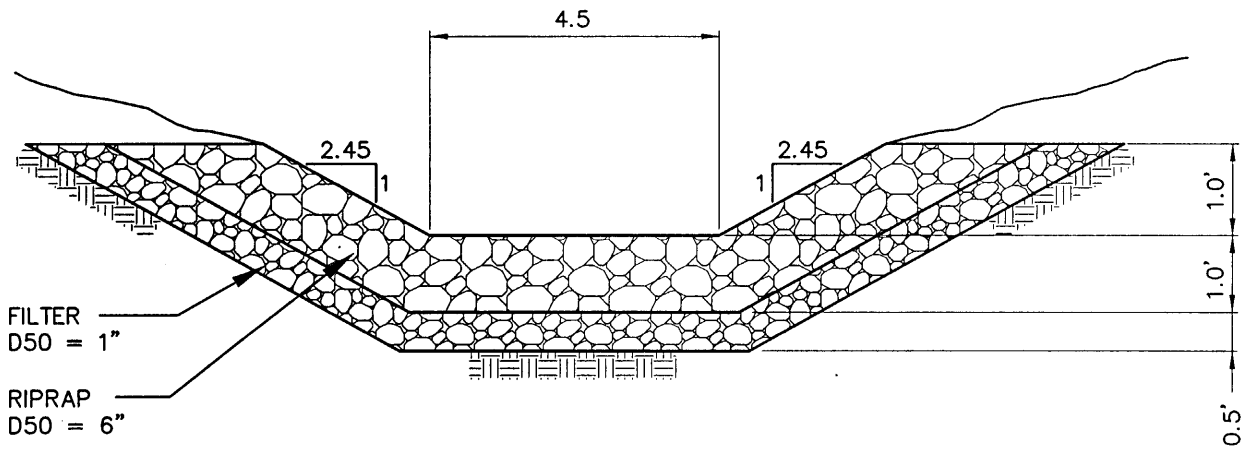

NO SCALE

CGRD–3 (RIPRAPPED PORTION) CHANNEL CROSS–SECTION

EarthFax

G:\UC709\23\HYDROLOGY\FIG-CGRD-3SS.DW

5/

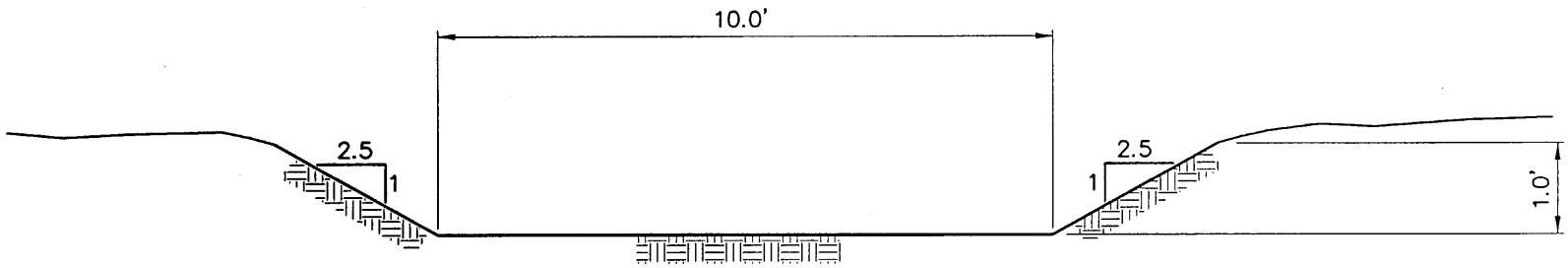

NO SCALE

CGRD-4 (NON-RIPRAPPED PORTION) CHANNEL CROSS-SECTION

EarthFax

G:\UC709\23\HYDROLOGY\FIG-CGRD-4MST.DWG

52

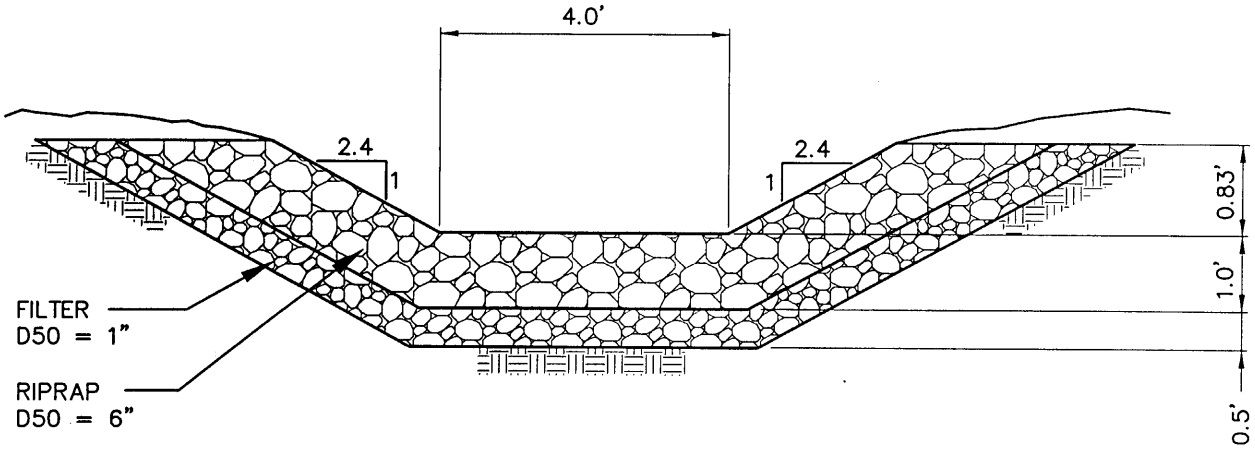

NO SCALE

CGRD–4 (RIPRAPPED PORTION) CHANNEL CROSS–SECTION

EarthFax

G:\UC709\23\HYDROLOGY\FIG-CGRD-4SS.DWG

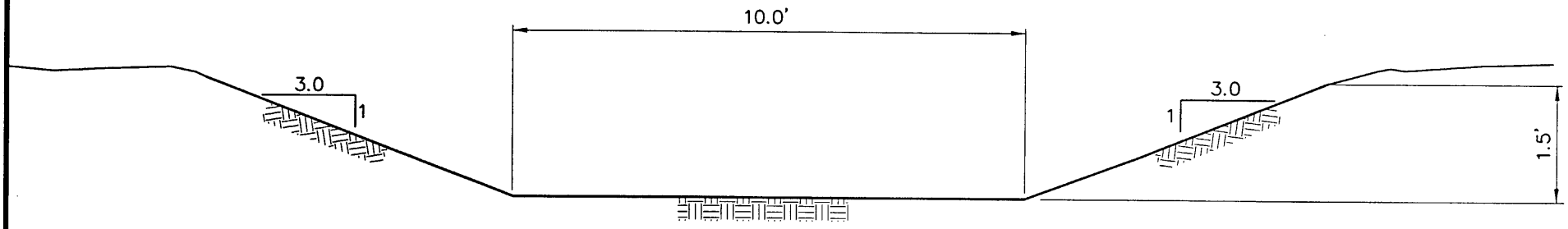

NO SCALE

CGRD-5 (NON-RIPRAPPED PORTION) CHANNEL CROSS-SECTION

EarthFax

G:\UC209\23\HYDROLOGY\FIG-CGRD-5WS.DW

54

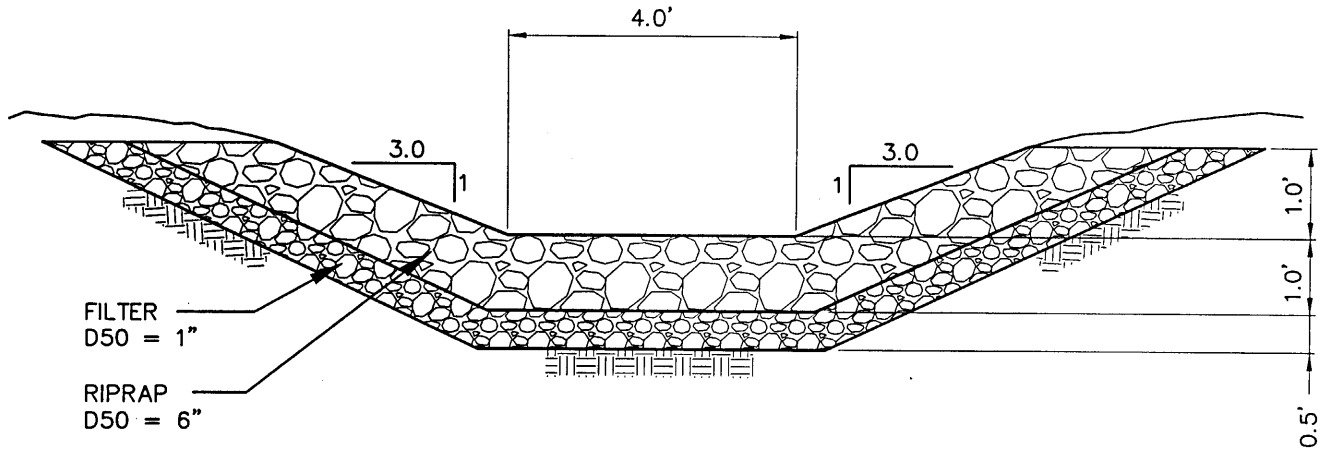

NO SCALE

CGRD–5 (RIPRAPPED PORTION) CHANNEL CROSS–SECTION

EarthFax

G:\UC7009\23\HYDROLOGY\FIG-CGRD-SSS.DWG

55

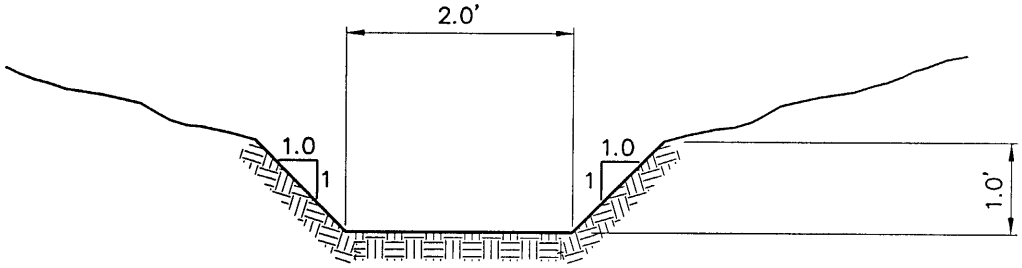

NO SCALE

CGRD-6 CHANNEL CROSS-SECTION

EarthFax

G:\UC709\23\HYDROLOGY\FIG-CGRD-6.DWG

56

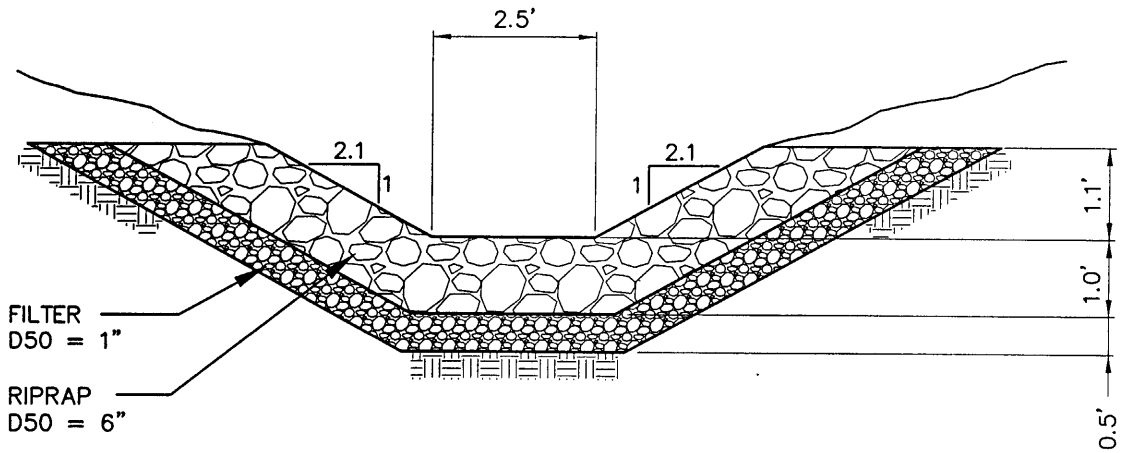

NO SCALE

CGRD-7 CHANNEL CROSS-SECTION

EarthFax

G:\UC709\23\HYDROLOGY\FIG-CGRD-7.DW

57

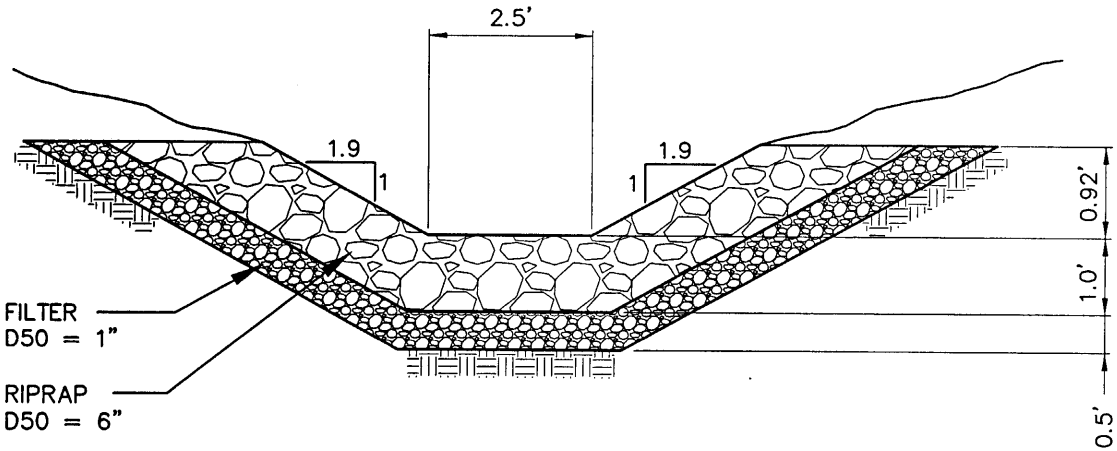

NO SCALE

CGRD-8 CHANNEL CROSS-SECTION

EarthFax

G:\UC709\23\HYDROLOGY\FIG-CGRD-8.DWG

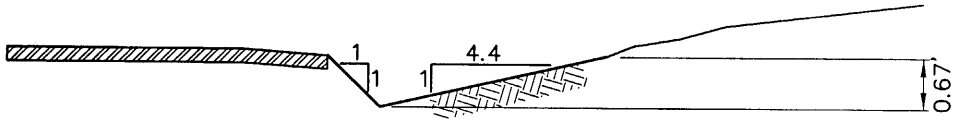

NO SCALE

CGRD-9 CHANNEL CROSS-SECTION

EarthFax

G:\UC709\23\HYDROLOGY\FIG-CGRD-9.DWG

57

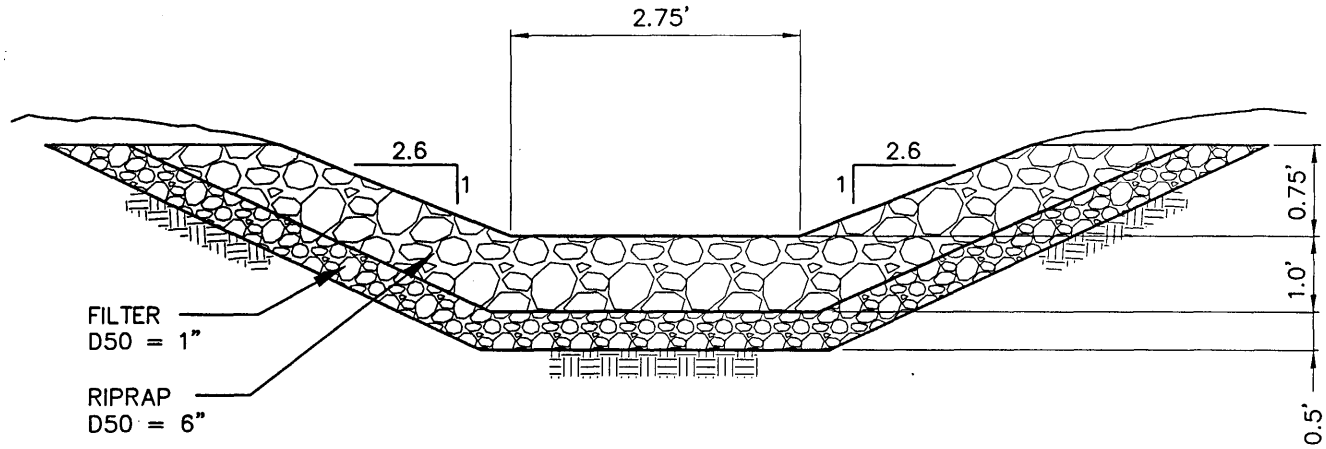

NO SCALE

CGRD–9a CHANNEL CROSS–SECTION

EarthFax

G:\UC709\23\HYDROLOGY\FIG-CGRD-9a.DWG

60

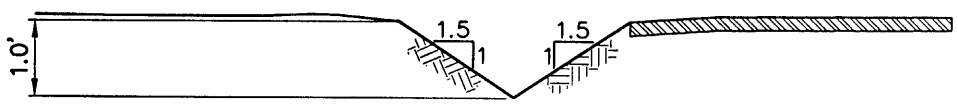

NO SCALE

CGRD-10 CHANNEL CROSS-SECTION

EarthFax

G:\UC709\23\HYDROLOGY\FIG-CGRD-10.DW

6/

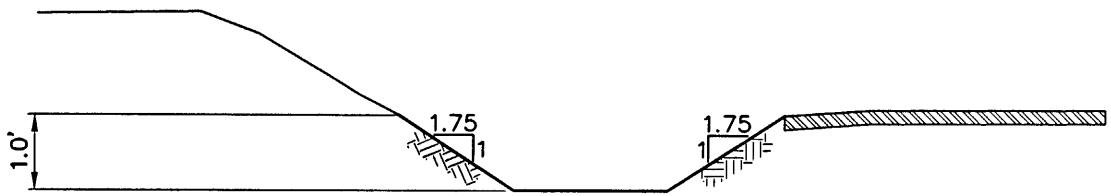

NO SCALE

CGRD-10A CHANNEL CROSS-SECTION

EarthFax

G:\UC709\23\HYDROLOGY\FIG-CGRD-10A.DWG

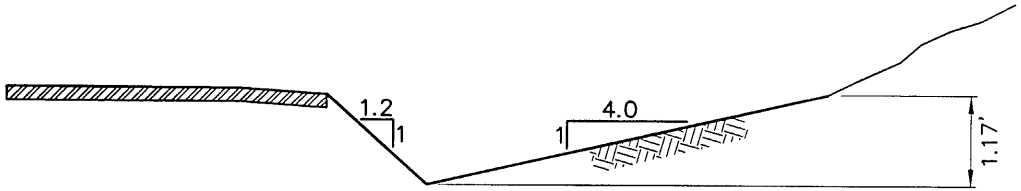

NO SCALE

CGRD-11 CHANNEL CROSS-SECTION

EarthFax

G:\UC709\23\HYDROLOGY\FIG-CGRD-11.DWG

63

Culvert Verification

Three operational culverts were left in place as part of reclamation due to the need to convey runoff below the road and railroad tracks to the Price River. These calculations will verify that these culverts can handle the design flow.

Assumptions

1. Culverts CGC-2 and CGC-5 are verified for the 100-year 6-hour storm event. Culvert CGC-1 is verified for the 10-year 6-hour storm event,

2. When determining the adequacy of the outlet riprap the method presented by Searcy, (1967) will be used,

3. Riprap thickness is twice the D_{50},

4. A Mannings n for culverts is 0.024

CGC-1

Peak Flow = 0.08 (CGRWS-6)

Culvert Size = 18"

Culvert Slope = 17%

Inlet Capacity = 5.6 cfs

Maximum flow velocity = 3.07 fps no riprap required

Maximum flow depth = 0.06 ft

CGC-2

Peak Flow = 222.9 cfs

Culvert Size = (2) 84"

Culvert Slope = 5%

Inlet Capacity = 260 cfs each

Maximum flow velocity = 14.29 fps Outlet riprap must be 30" or larger

Maximum flow depth = 1.8 ft

CGC-5

Peak Flow = 32.52 (CGRWS-1 to CGRWS-5 and CGRWS-9)

Culvert Size = 60"

Culvert Slope = 10%

Inlet Capacity = 110 cfs

Maximum flow velocity = 20.37 Outlet riprap must be 40" or larger

Maximum flow depth = 0.68

CGC-1
Worksheet for Circular Channel

Project Description	
Worksheet	Circular Channel
Flow Element	Circular Channel
Method	Manning's Formu
Solve For	Channel Depth

Input Data		
Mannings Coeffic	0.024	CMP
Slope	170000	ft/ft
Diameter	18	in
Discharge	0.08	cfs

Results		
Depth	0.06	ft
Flow Area	2.6e-2	ft²
Wetted Perime	0.62	ft
Top Width	0.61	ft
Critical Depth	0.10	ft
Percent Full	4.3	%
Critical Slope	0.021340	ft/ft
Velocity	3.07	ft/s
Velocity Head	0.15	ft
Specific Energ:	0.21	ft
Froude Numbe	2.61	
Maximum Disc	25.23	cfs
Discharge Full	23.46	cfs
Slope Full	0.000002	ft/ft
Flow Type	Supercritical	

© Haestad Methods, Inc.
EarthFax Engineering Inc
37 Brookside Road Waterbury, CT 06708 USA (203) 755-1666

CGC-2
Worksheet for Circular Channel

Project Description	
Worksheet	Circular Channel
Flow Element	Circular Channel
Method	Manning's Formu
Solve For	Channel Depth

Input Data		
Mannings Coeffic	0.024	CMP
Slope	050000	ft/ft
Diameter	84	in
Discharge	111.45	cfs

Half of total flow since there are two culverts

Results		
Depth	1.80	ft
Flow Area	7.8	ft²
Wetted Perime	7.43	ft
Top Width	6.11	ft
Critical Depth	2.72	ft
Percent Full	25.6	%
Critical Slope	0.010196	ft/ft
Velocity	14.29	ft/s
Velocity Head	3.17	ft
Specific Energ	4.97	ft
Froude Numbe	2.23	
Maximum Disc	832.29	cfs
Discharge Full	773.71	cfs
Slope Full	0.001037	ft/ft
Flow Type	Supercritical	

CGC-5
Worksheet for Circular Channel

Project Description	
Worksheet	Circular Channel
Flow Element	Circular Channel
Method	Manning's Formu
Solve For	Channel Depth

Input Data			
Mannings Coeffic	0.013		Concrete
Slope	100000	ft/ft	
Diameter	60	in	
Discharge	32.52	cfs	

Results		
Depth	0.68	ft
Flow Area	1.6	ft²
Wetted Perime	3.77	ft
Top Width	3.42	ft
Critical Depth	1.59	ft
Percent Full	13.6	%
Critical Slope	0.003286	ft/ft
Velocity	20.37	ft/s
Velocity Head	6.45	ft
Specific Energ	7.13	ft
Froude Numbe	5.26	
Maximum Disc	885.89	cfs
Discharge Full	823.55	cfs
Slope Full	0.000156	ft/ft
Flow Type	Supercritical	

ATTACHMENT 2

PUBLIC NOTICE AND LETTERS TO AGENCY AND LAND OWNERS

Public Notice

Application for Phase I Bond Release for the Coal Refuse Pile and Phase III Bond Release for the Preparation Plant
Plateau Mining Corporation
Willow Creek Mine
Permit C/007/038, Approved 04/24/2001
Carbon County, Utah

Plateau Mining Corporation, P.O. Box 30, Helper, UT 84526, has completed Phase I of the approved reclamation plan for the approximately 49.1 acres of land related to the Coal Refuse Pile and Phase III of the approved reclamation plan for approximately 46.2 acres of land related to the Preparation Plant at the Willow Creek Mine. The Phase I portion of the bond release application is based on completing the demolition, backfilling and grading and drainage control requirements in accordance with the approved reclamation plan and the Phase III portion of the bond release is based on an alternative post mining land use wherein this land was sold to the Price River Water Improvement District for industrial use. The reclamation work applicable to this bond release application was completed in the spring of 2004

In accordance with the requirements of R645-301-880, of the State of Utah R645-Coal Mining Rules, notice is hereby given to the general public that Plateau Mining Corporation is applying for partial release of the performance bond posted for this operation.

The surety bond posted for the Willow Creek Mine is $7,866,000 of which $2,706,000 is designated for the Coal Refuse Pile and Preparation Plant. Plateau Mining Corporation is seeking Phase I release of $682,000 from the Coal Refuse Pile portion of the bond and Phase III release of $ 1,479,000 from the Preparation Plant portion of the bond.

The Refuse Pile and Preparation Plant are located on the Helper, Utah, U.S. Geological Survey 7.5 minute quadrangle map. This reclaimed land is located in Price Canyon approximately 3.5 miles north of Helper, Utah on the following described lands:

Township 12 South, Range 9 East, SLB&M, Utah

Section 36: Portions of the	NE1/4, NW1/4, SE1/4, NW1/4, SW1/4, NW1/4, and SW1/4.
Section 35: Portions of the	NE1/4, SE1/4, SE1/4, SE1/4, and SE1/4, NE1/4.

Township 13 South, Range 9 East, SLB&M, Utah

Section 1: Portions of the NW1/4, NW1/4,

The Utah Division of Oil, Gas and Mining will now evaluate the proposal to determine whether it meets all the criteria of the Permanent Program Performance Standards according to the requirements of the Utah Coal Mining Rules.

Written comments, objections and requests for public hearing or informal conference on this proposal may be addressed to:

Utah Coal Program
Utah Division of Oil, Gas and Mining
1594 West North Temple, Suite 1210
P.O. Box 145801
Salt Lake City, Utah 84114-5801

Closing date for submission of such comments, objections and requests for public hearing or informal conference on this proposal must be submitted by November 13, 2005.

Published in the Sun Advocate – September 22, September 29, October 6, October 13, 2005

PLATEAU MINING CORPORATION

Willow Creek Mine
P.O. Box 30
Helper, Utah 84526

September 19, 2005

Mr. Hugh Kirkham
State of Utah
Department of Transportation
940 South Carbon Avenue
Price, Utah 84501

Re: Notification of Application for Phase I Bond Release for the Coal Refuse Pile and Phase III Bond Release for the Preparation Plant, Plateau Mining Corporation, Willow Creek Mine, C/007/038, Carbon County, Utah

Dear Mr. Kirkham:

Plateau Mining Corporation, P.O. Box 30, Helper, UT 84526, has completed Phase I of the approved reclamation plan for the approximately 49.1 acres of land related to the Coal Refuse Pile and Phase III of the approved reclamation plan for approximately 46.2 acres of land related to the Preparation Plant at the Willow Creek Mine. The Phase I portion of the bond release application is based on completing the demolition, backfilling and grading and drainage control requirements in accordance with the approved reclamation plan and the Phase III portion of the bond release is based on an alternative post mining land use wherein this land was sold to the Price River Water Improvement District for industrial use. The reclamation work applicable to this bond release application was completed in the spring of 2004

In accordance with the requirements of R645-301-880, of the State of Utah R645-Coal Mining Rules, notice is hereby given to the general public that Plateau Mining Corporation is applying for partial release of the performance bond posted for this operation.

The surety bond posted for the Willow Creek Mine is $7,866,000 of which $2,706,000 is designated for the Coal Refuse Pile and Preparation Plant. Plateau Mining Corporation is seeking Phase I release of $682,000 from the Coal Refuse Pile portion of the bond and Phase III release of $ 1,479,000 from the Preparation Plant portion of the bond.

The Refuse Pile and Preparation Plant are located on the Helper, Utah, U.S. Geological Survey 7.5 minute quadrangle map. This reclaimed land is located in Price Canyon approximately 3.5 miles north of Helper, Utah on the following described lands:

Township 12 South, Range 9 East, SLB&M, Utah

Section 36: Portions of the NE1/4, NW1/4,
SE1/4, NW1/4,
SW1/4, NW1/4, and
SW1/4.

Section 35: Portions of the NE1/4, SE1/4,
SE1/4, SE1/4, and
SE1/4, NE1/4.

Township 13 South, Range 9 East, SLB&M, Utah

Section 1: Portions of the NW1/4, NW1/4,

Comments concerning bond release from the legal or equitable owner of record of the surface areas to be affected and from the Federal, Utah and local government agencies with would have to initiate, implement, approve or authorize the proposed use of the land following reclamation should be mailed to: Plateau Mining Corporation, Attention: Dennis Ware, P.O. Box 30 Helper, Utah 84526.

Sincerely,

Dennis Ware
Controller and Administrative Manager
(435) 472-4737
dware@foundationcoal.com

Mailed to:

Mr. Dave Levanger
Carbon County Planning and Zoning
120 East Main Street
Price, Utah 84501

Mr. Roger Wheeler
Director Land Management
700 Morrison Road
Gahanna, Ohio 43230-6642

Mr. Gary Harwood
Helper City
P.O. Box 221
Helper, Utah 84526

Mr. Harold Cunningham
Utah Power and Light – Carbon Plant
Helper, Utah 84526

Carbon County Commissioners
120 East Main Street
Price, Utah 84501

Mr. Phil Palmer
Price River Water Improvement District
P.O. Box 903
265 South Fairgrounds Road
Price, Utah 84501

Mr. Patrick Gubbins
Bureau of Land Management
125 South 600 West
Price, Utah 84501

Mr. Kevin S. Carter
Director
School and Institutional Trust Lands Administration
675 East 500 South, Suite 500
Salt Lake City, Utah 84102-2818

Mr. Hugh Kirkham
State of Utah
Department of Transportation
940 South Carbon Avenue
Price, Utah 84501

ATTACHMENT 3

BOND RELEASE CALCULATIONS

PREPARATION PLANT AND REFUSE PILE
BOND RELEASE CALCULATIONS

As a result of the Post Mining Land Use Change for the Preparation Plant area the land use for the Preparation Plant area was changed to an industrial use. Price River Water Improvement District ("PRWID") has purchased the Preparation Plant area and intends to improve the site for its use. Due to the change in ownership and land use designation the Preparation Plant area is eligible for phase III bond release. When bond calculations were made for the site the Refuse Pile area was included in the bond calculation. The Refuse Pile area is only eligible for phase 1 bond release. These calculations determine the portions of the bond eligible for phase I and phase III bond release. The total bond for the site is $2,706,000 as shown on the summary sheet for the Preparation Plant area in Exhibit 17. The reference year for this bond cost was 2006. All calculations will be adjusted to 2006 costs to allow direct comparison.

The entire site has been reclaimed with the exception of the Unit Train Loadout area. Any structures remaining have been left at the request of PRWID.

Total bond amount = $2,706,000

Loadout Area

The loadout area has not been reclaimed yet so the reclamation cost for this area must be subtracted from the total bond money available for bond release. The attached spreadsheet calculates the reclamation costs for the loadout area. The reclamation cost was estimated to be $90,864.

Phase III Bond Release (Prep Plant Area)

The summary bond sheet in Exhibit 17 identifies the demolition subtotal as $614,133. Indirect costs and escalation are added as follows:

Mob/demob (10%) $61,413
Contingency (5%) $30,707
Redesign fee (2.5%) $15,353
Main office expense (6.8%) $41,761
Project management fee (2.5%) $15,353

Subtotal indirect costs $164,587

Total demolition cost $778,720

Escalation (3.12% per year for 5 years to escalate to 2006) $908,021

The Preparation Plant PMLUC Reclamation Option Bond Estimate in Exhibit 17 separated the earthwork, drainage controls, topsoil distribution, revegetation, and monitoring for the

Preparation Plant and the Refuse Pile. The direct and indirect cost for reclaiming the Preparation Plant area is $600,985. Escalating that total to 2006 assuming an inflation rate of 3.27% annually results in a cost of $661,865.

Total amount eligible for Phase III bond release = $908,021 - $90,864 + 661,865 = $1,479,000 rounded to nearest $000.

Phase I Bond Release (Refuse Pile Area)

The remaining bond amount ($2,706,000 - $1,479,000 =) $1,227,000 less $91,000 for the loadout leaves $1,136,000 eligible for Phase I bond release. The as-built reclamation maps demonstrate that the Refuse Pile area has been reclaimed. PMC is requesting the maximum bond release for this area of 60%.

Total bond release for the Refuse Pile area = 0.6($1,136,000) = $682,000 rounded to nearest $000.

Bond Release Summary

Phase III bond release:	$1,479,000
Phase I bond release:	$ 682.000
Remaining bond amount:	$ 545,000
Total bond:	$2,706,000

Permit No.	Item No.	Description	Quantity	Unit	Material Cost Per Unit	Material Cost Total	Equipment Cost Per Unit	Equipment Cost Total	Labor Cost Per Unit	Labor Cost Total	Project Cost Per Unit	Project Cost Total
		DEMOLITION										
Notes:												
	(a) Means Heavy Construction Cost Data, 2000 inflated by 9% to reflect 2003 costs											
62	24	UNIT TRAIN LOADOUT										
		Metal bldg. (42' X 30' X 120')	151200	CF			0.11	16632.00	0.08	12096.00	0.19	28,728
		(02220-100-0012)										
		Concrete piers w/ rebar (2' X 2' X 6') X 2, 48 CF	48	CF			1.10	52.80	1.56	74.88	2.66	128
		(02220-550-1140 and -1200) SEE NOTES										
		10% added for reinforcement										
		Concrete pad w/ rebar (42' X 30' X 5'), 6300 CF	10.5	DAY			1012.61	10632.41	284.49	2987.15	1297.10	13,620
		(Hydraulic Excavator w/ 2 CY bucket)										
		(01590-200-0300)										
		12" Concrete pad w/ mesh (45' X 54'), 2430 CF	90	CY			45.78	4120.20	45.78	4120.20	91.56	8,240
		(02220-875-2200)										
		Bridge - 2 flatbed rail cars (85' X 9')	1	LS			817.50	817.50	545.00	545.00	1362.50	1,363
		Bridge abutments w/ rebar (25' X 10' X 3') 2, 1500 CF	2.5	DAY			1226.25	3065.63	367.55	918.88	1593.80	3,985
		(Hydraulic Excavator w/ 2 CY bucket)										
		(01590-200-0300)										
		Onsite disposal of concrete (loose)	381	CY			3.79	1443.99	1.92	731.52	5.71	2,176
		(02220-550-4200)										
												58,238
		DEMOLITION TOTAL										
		ROUGH GRADING										
		EXCAVATION - BACKFILLING AND GRADING										
	1	Rough grading with a 4 CY Excavator (CAT 345)										
		Excavation of 756 CY	0.1	MONTH			14945.00	1495			14945.00	1495
		Excavator operating cost including operator	20.0	HRS					101.10	2022	101.10	2022
		(Dataquest bluebook 3Q02 pg 10-8)										

Permit No.	Item No.	Description	Quantity	Unit	Material Cost Per Unit	Material Cost Total	Equipment Cost Per Unit	Equipment Cost Total	Labor Cost Per Unit	Labor Cost Total	Project Cost Per Unit	Project Cost Total
	2	Water Truck, 1/2 time operator	0.1	MO			3270.00	327.00	4510.00	451.00	7780.00	778
		(01590-400-7000)										
		Assume a half time operator at $205/day operation cost										
		Assume 22 operating days per month and 8 hours per day										
	8	Foreman (01310-700-0200)	0.1	MO					6471.80	647	6471.80	647
	9	Pickup Truck (01590-400-7200)	0.1	MO			784.40	78			784.40	78
		EXCAVATION AND ROUGH GRADING TOTAL										**5,020**
::												
		REVEGETATION										
	1	Seeding, hydro with mulch (35lb/acre)	28.00	MSF	18.03	504.84	8.56	239.68	8.05	225.40	34.64	969.92
		(02920-510-1700) pit and road										
	2	Straw mulch - 2 tons/acre incorporated into the soil	28.00	MSF	20.17	564.76	0.92	25.76	0.71	19.88	21.80	610.40
		during gouging										
		(02910-500-0350) pit and road										
	3	Deep gouging/mixing in mulch with excavator 2 CY (rental)	0.05	MONTH			9,205.00	460.25			9,205.00	460.25
		(Dataquest 3Q02 pg 10-8)										
		Operating costs (Dataquest 3Q02 pg 10-8)	8.00	HR			80.90	647.20			80.90	647.20
		REVEGETATION TOTAL										**2,687.77**
		Revegetation Subtotal										2,688
		Reseeding and Replanting (25%)										672
		REVEGETATION TOTAL										**3,360**
::												
		LOADOUT AREA										
		DIRECT COST SUMMARY										
		Demolition										58,238
		Rough Grading Excavation Total										5,020
		Revegetation Total										3,360
		Total Direct Costs										66,618

Permit No.	Item No.	Description	Quantity	Unit	Material Cost Per Unit	Material Cost Total	Equipment Cost Per Unit	Equipment Cost Total	Labor Cost Per Unit	Labor Cost Total	Project Cost Per Unit	Project Cost Total
		LOADOUT AREA										
		INDIRECT COSTS										
		Mobilization/Demobilization (5%)	Average from 2000 OSM Reclamation Bond Amount Calculation Handbook and DOGM recommended									3,331
		Contingencies (4%)	Average from 2000 OSM Reclamation Bond Amount Calculation Handbook									2,665
		Engineering Redesign Fee (2.5%)	Minimum from 2000 OSM Reclamation Bond Amount Calculation Handbook									1,665
		Contractor Profit and Overhead (10%)										6,662
		Reclamation Management Fee (2.0% of inflated direct costs)	From 2000 OSM Reclamation Bond Amount Calculation Handbook									1,565
		Total Indirect Costs										15,888
		Subtotal Reclamation Cost										82,506
		Escalation - 10.13% (3.27%/yr over 3 yrs.)										8,358
										Loadout Reclamation Cost		90,864