731.600 Stream Buffer Zones

The surface facilities for the Dugout Canyon Mine will be constructed within 100 feet of Dugout Creek (a perennial stream). However, surface runoff- and sediment-control facilities designed for the site (as discussed in subsequent sections of this chapter) will ensure that coal mining and reclamation operations will not cause or contribute to the violation of applicable Utah or federal water standards and will not adversely affect the water quantity and quality or other environmental resources of the stream.

Stream Channel Diversions. Temporary or permanent stream channel diversions will comply with R645-301-742.300.

Buffer Zone Designation. The area surrounding the streams that is not to be disturbed will be designated as a buffer zone, and SCM will mark those zones as specified in Section 521.200 of this M&RP.

731.700 Cross Sections and Maps

The locations of water rights for current users of surface water flowing into, out of, and within the permit and adjacent areas is provided on Plate 7-2. The locations of each water diversion, collection, conveyance, treatment, storage, and discharge facility to be used in the Dugout Canyon area is presented on Plate 7-5 or in Addendum A to Appendix 7-9.

Locations and elevations of each station to be used for water monitoring during coal mining and reclamation operations are presented on Plate 7-1. The design details and cross sections for the sedimentation pond are provided on Plate 7-4. Other relevant cross sections or maps are presented and discussed in Chapter 5 of this M&RP.

731.800 Water Rights and Replacement

No surface mining will occur in the Dugout Canyon Mine permit area.

732 Sediment Control Measures

The sediment control measures within the permit area have been designed to prevent additional contributions of sediment to streamflow or to runoff outside the permit area. In addition, they have been designed to meet applicable effluent limitations, and minimize erosion to the extent possible.

The structures to be used for the runoff-control plan for the permit area include disturbed and undisturbed area diversion channels, a sedimentation pond, containment berms, silt fences, and road diversions and culverts.

732.100 Siltation Structures

The siltation structure within the permit area will be a sedimentation pond as described in Section 732.200.

732.200 Sedimentation Ponds

There will be a single sedimentation pond operating at the mine facility located at the southwest end of the disturbed area. The sedimentation pond topography and cross sections are presented on Plate 7-4 of this M&RP. Details regarding sedimentation pond design are presented in Appendix 7-8. The staff gauge in the pond will be marked to indicate the 60% clean-out elevation as defined in Section 742. The sedimentation pond is defined as a Class A pond in accordance with TR-60 (U.S. Soil Conservation Service, 1976).

If sediment has accumulated to the 60% clean-out elevation, the pond will be cleaned. The sediment will be transported and either stored at the Banning Loadout or disposed of at the approved waste rock disposal sites as described in Chapter 5 of this M&RP or pumped back into the sealed, abandoned "Gilson West - Old Workings".

The sedimentation pond is within the disturbed area boundary and is subject to final reclamation. The area is included in the calculation of the disturbed area subject to bonding and in the calculation of final reclamation costs.

Compliance Requirements. The sedimentation pond will be maintained until removal in accordance with the reclamation plan (see Section 540 of this M&RP). When the pond is removed, the land will be revegetated in accordance with the reclamation plan defined in Section 540.

The sedimentation pond was designed to contain 0.40 acre-foot of sediment accumulation before being cleaned out. The sedimentation pond will fully contain the runoff from the 10-year, 24-hour storm event in addition to sediment accumulation. The primary spillway for the sedimentation pond will adequately pass the peak flow resulting from the 25-year, 6-hour precipitation event. The pond has also been designed with an emergency spillway to release water from the pond in the event that the primary spillway becomes blocked.

Additional design standards for the pond are presented in Section 742.

MSHA Requirements. MSHA requirements defined in 30 CFR 77.216 are not applicable since the sedimentation pond will not impound water or sediment to an elevation of 20 feet or more above the upstream toe of the structure. The pond will also store a volume less than 20 acre-feet.

732.300 Diversions

The objective of the runoff control plan is to isolate, to the maximum degree possible, runoff from disturbed areas from that of undisturbed areas. This is accomplished by:

- Allowing all upstream runoff in Dugout Creek to bypass the disturbed area through the use of culverts;
- Routing runoff from the adjacent undisturbed areas above the facilities through culverts and diversion ditches where feasible to bypass the disturbed area; and
- Routing any runoff from undisturbed areas which enters the disturbed area into the sediment control system.

The location of each diversion ditch or culvert for the main facility area is presented on Plate 7-5 or in Addendum A to Appendix 7-9. Details regarding design of the diversions are presented in Appendix 7-9. A brief list of the proposed diversion structures follows (refer to Plates 7-6 through 7-8 for the location of each watershed boundary):

Diversion Ditches:

- Interception ditch UD-1 along the southeast border of the disturbed area will collect runoff from adjacent undisturbed watersheds and direct the runoff into Dugout Creek.

- Disturbed drainage ditches DD-1 through DD-7 will be located within the main portion of the facility pad, directing disturbed-area runoff from this pad toward the sedimentation pond.

- Disturbed drainage ditch DD-8 will be located along the north edge of the road that accesses the large and small substation pads. Runoff from ~~this~~ ditch DD-8 will be conveyed to the sedimentation pond via culvert DC-7 and ditch DD-7. The runoff from the small substation pad area reports to the sediment pond by way of DD-8, DC-7 and DD-7.

- Disturbed drainage ditch DD-9 will be located on the southeast edge of the portal pad and will convey runoff to the sedimentation pond via ditches DD-6 and DD-7 and culvert DC-5.

- Disturbed drainage ditch DD-10 will be located on the north side of the access road to the portal pad. This ditch will convey runoff to the sedimentation pond via culverts DC-2, DC-3, and DC-5 and ditches DD-5, DD-6, and DD-7.

- Disturbed drainage ditch DD-11 will be located along the west side of the water-tank access road, extending to the interim crest of the road. This ditch will convey runoff to the sedimentation pond via culverts DC-1, DC-2, DC-3, and DC-5 and ditches DD-5, DD-6, and DD-7.

- Disturbed drainage ditches DD-12 through DD-16 will be located along the water-tank access road. Because of the crest in the road between ditches DD-11 and DD-12, runoff from these ditches cannot be conveyed to the sedimentation pond. Thus, alternate sediment control will be provided for the discharge from these ditches (see Section 742.200 of this M&RP).

- Disturbed drainage ditch DD-17 will be located on the northwest border of the water-tank pad. The presence of the above-mentioned crest in the access road requires

that alternate sediment control be provided for the discharge from this ditch (see Section 742.200 of this M&RP).

Diversion Culverts:

- Culverts DC-1, DC-2, DC-3, and DC-5 will be located along the northwest portion of the main facility pad. These culverts will convey runoff from and to various ditches leading to the sedimentation pond. Culverts DC-1 and DC-2 will be connected via a drop inlet, into which ditch DD-10 will discharge.

- Culvert DC-4 will convey runoff from the portal pad via a drop inlet to the lower facility pad. This runoff will ultimately discharge to the sedimentation pond via ditches DD-6 and DD-7 and culvert DC-5.

- Culvert DC-6 will convey water from ditches located on the south side of the facility pad to the sedimentation pond. . The drop inlet structure designs for this culvert are included in Attachment B of Appendix 7-11.

- Culvert DC-7 will convey water from the substation access road into ditch DD-7 and then to the sedimentation pond. A drop inlet will be used on this culvert. The outlet of this diversion into the sediment pond will be riprapped.

- Culverts DC-7A, DC-8 and DC-9 will be located along the water-tank access road, conveying runoff from the roadside ditches to Dugout Creek. Because of the presence of the crest in the road between the facility pad and these culverts, this runoff cannot be conveyed to the sedimentation pond. Hence, alternate sediment control will be provided as noted in Section 742.200 of this M&RP.

- Culverts DC-10 and 11, will be located along the northeast portion of the main facility pad. These culverts will convey disturbed area runoff to the sedimentation pond.

- Culverts UC-1 and UC-2 will convey undisturbed-area runoff from watersheds WS-4 and WS-10, respectively, to the Dugout Creek bypass culvert (UC-5). Culvert UC-3 will convey undisturbed-area runoff from ditch UD-1 to the Dugout Creek culvert (UC-5).

- Culvert UC-4 will be located on the eastern tributary of Dugout Creek. Containing this tributary in a culvert will prevent uncontrolled sediment from the adjacent disturbed area from impacting this water during the operational period. Gabion baskets will be installed adjacent to the culvert as shown on Dwg. No. B101 in Appendix 7-9.

- Culvert UC-5 is located on the main branch of Dugout Creek, containing the creek through the disturbed area and allowing coal-haul trucks to enter and leave the loadout pad and mine access/haul road. Installation of this culvert will protect Dugout Creek from sediment which may be generated from the adjacent disturbed areas.

- Culvert UC-6 will convey undisturbed-area runoff from watershed WS-2 to culvert UC-5.

Diversion Swale:

- Swale SW-1 will capture and convey sheet flow from the road and pad before it exits the disturbed area. Runoff will be directed to the sediment pond at the northwest end of the swale. The discharge point of the swale will be riprapped. The design calculations for SW-1 and riprap are included tin Attachment B of Appendix 7-9.

All diversion ditches will be maintained with adequate riprap or alternative erosion protection in the ditch sections where flow velocities are predicted to be sufficiently high to require a ditch lining. Adequate ditch capacities will be maintained in all ditch sections. Culverts will be kept free of debris and each outlet will be protected with riprap where deemed necessary. Detailed diversion design is presented in Section 742.

732.400 Road Drainage

Road drainage facilities will include diversion ditches, culverts, and containment berms. The road drainage diversion ditches and culverts for the mine site are included in the list of diversions presented in Section 732.300 above. Additional road drainage design information is presented in Section 742.

All road drainage diversions will be maintained and repaired to original condition following the occurrence of a large storm event. Culvert inlets and outlets will be kept clear of sediment and other debris. Culverts to be installed on Dugout Creek to permit turning of the coal haul trucks are discussed in Section 742.300.

733 Impoundments

733.100 General Plans

There will be a single sedimentation pond operating at the mine facility as described in Section 732.200. The sedimentation pond will be located in the southwest corner of the disturbed area. The sedimentation pond topography and cross sections are presented on Plate 7-4 of this M&RP. Detailed design information is presented in Appendix 7-8.

Certification. All maps and cross sections of the sedimentation pond have been prepared by or under the direction of, and certified by a qualified, registered, professional engineer.

Maps and Cross Sections. The topography and cross sections for the sedimentation pond are provided on Plate 7-4 of this M&RP.

Narrative. A description of the sedimentation pond is presented in Sections 732.200 and 742 of this M&RP.

Subsidence Survey Results. No underground coal mining will occur beneath the proposed sedimentation pond. Therefore, there will be no effects on the pond or pond embankment from subsidence.

Hydrologic Impact. The hydrologic and geologic information required to assess the hydrologic impacts of the proposed sedimentation pond are presented in Section 724 and Chapter 6 of this M&RP, respectively.

Design Plans and Construction Schedule. There are no additional structures proposed for the mining operation at this time. Any structures proposed in the future will not be constructed until the Division has approved the detailed design plan for the structure.

733.200 Permanent and Temporary Impoundments

Requirements. The sedimentation pond has been designed using current, prudent engineering practices. Specific foundation design and construction criteria are presented in Chapter 5 of this M&RP. Specific hydrologic design criteria for the pond are presented in Section 743. The pond will be inspected regularly based on the schedule contained in Section 514.300.

Permanent Impoundments. There are no permanent impoundment structures proposed for use in mining and reclamation operations within the permit and adjacent areas.

Temporary Impoundments. The Division's authorization is being sought for the construction of the sedimentation pond as a temporary impoundment at the mine as part of coal mining and reclamation operations.

Hazard Notifications. The sedimentation pond will be examined for structural weakness and erosion in accordance with the schedule presented in Section 514.300. A report of these findings will be submitted to the Division as outlined in Section 514.300.

734 Discharge Structures

Discharge structures within the Dugout Canyon Mine facilities area will consist of the primary and emergency spillway on the sedimentation pond and a discharge line from the underground workings. All discharge structures will be constructed and maintained to comply with R645-301-744.

735 Disposal of Excess Spoil

There will be no excess spoil generated at the mine.

736 Coal Mine Waste

Coal mine waste will be stored and disposed of as described in Chapter 5.

737 Noncoal Mine Waste

Noncoal mine waste will be stored and disposed of as described in Chapter 5.

738 Temporary Casing and Sealing of Wells

Each groundwater monitoring well identified on Plate 7-1 will be operated and maintained as described in Section 748.

740 DESIGN CRITERIA AND PLANS

741 General Requirements

This M&RP includes site-specific plans that incorporate minimum design criteria for the control of drainage from disturbed and undisturbed areas.

742 Sediment Control Measures

742.100 General Requirements

Design. Sediment-control measures have been designed to provide the following:

- Prevent additional contributions of sediment to stream flow or to runoff outside the permit area;
- Meet the effluent limitations defined in Section 751; and
- Minimize erosion to the extent possible.

Measures and Methods. The sediment control measures at the mine will include practices carried out within and adjacent to the disturbed area. Sediment control methods will include:

- Retention of sediment within the disturbed area;
- Diversion of runoff away from the disturbed area;
- Diversion of runoff using channels or culverts through disturbed areas to prevent additional erosion;

- Provision of silt fences, riprap, contemporaneous revegetation, vegetative sediment filters, a sedimentation pond, and other measures that reduce overland flow velocities, reduce runoff volumes or trap sediment; and
- Treatment of mine drainage in underground sumps.

742.200 Siltation Structures

General Requirements. Additional contributions of suspended solids and sediment to stream flow or runoff outside the permit area will be prevented to the extent possible using a sedimentation pond. The pond will be constructed before mining operations begin. The structures will be certified by a qualified registered professional engineer.

The sedimentation pond has been designed and will be constructed and maintained as described in Chapter 5 and Sections 733 and 743.

Some areas within the disturbed area boundary will not flow to the sedimentation pond. Areas not contributing runoff to the sedimentation pond would be impractical, if not impossible, to divert to the sedimentation pond due to their location. The proposed disturbed areas which will not flow to the sedimentation pond can be generally described as areas downstream from the sedimentation pond, areas along the water-tank access road, and the area occupied by the water tanks.

Areas of alternate sediment control (ASCAs) are shown on Plate 7-8 and in Addendum A to Appendix 7-9. These include ASCA-1 (a small portion of the primary haul road downstream from the sedimentation pond), ASCA-2 (the water-tank access road upstream from the crest in the road at the top of watershed DWS-1 and downstream from culvert DC-9), ASCA-3 (the water-tank access road upstream from culvert DC-8 ~~to the upper end of the disturbed area~~), ASCA-4 (the water-tank area), ~~and~~ ASCA-5 (the topsoil storage area) and ASCA-6 (the water-tank access road upstream from culvert DC-7A).

ASCA-1 will consist of a small portion of the primary haul road adjacent to and downstream from the sedimentation pond. Sediment control in this area will be provided by paving the road, thus precluding the production of sediment from the ASCA.

Runoff from ASCA-2 will be precluded from flowing to the sedimentation pond because of a crest in the water-tank access road at the downstream edge of this ASCA. Instead, runoff from this area will flow to Dugout Creek via culvert DC-8 (see Plate 7-5). Sediment generated from this ASCA will be controlled by installing silt fences or straw-bale dikes in ditch ~~es DD-12 and~~ DD-13 immediately upstream from the inlet to culvert DC-8. These sediment-control devices will be installed in accordance with Figure 5-4. Sediment which accumulates behind these devices will be periodically removed and either spread on the adjacent road or disposed of with waste-rock generated from the mine.

Runoff from ASCA-3 will be precluded from flowing to the sedimentation pond for the reasons outlined above. This runoff will flow to Dugout Creek via culvert DC-9 (see Plate 7-5). Sediment generated from this ASCA will be controlled by installing silt fences or straw-bale dikes in ditch DD-14 immediately upstream from the inlet to culvert DC-9. These sediment-control devices will be installed in accordance with Figure 5-4. Sediment which accumulates behind these devices will be periodically removed and either spread on the adjacent road or disposed of with waste-rock generated from the mine.

ASCA-4 consists of the water-tank area and the adjacent cut slope. Sediment yield from this area will be controlled by placing a layer of gravel around the water tanks and the explosives magazines. The cut slope west of the water tanks will also be contemporaneously reclaimed using the interim seed mix identified in Section 341.200 of this M&RP. Runoff which is generated from this ASCA will also flow through culvert DC-9, with additional sediment control being provided at the inlet to this culvert as discussed above.

An additional alternate sediment control measure (ASCA-5) will be implemented at the topsoil storage area. Sediment contributions from this stockpile will be controlled by placing a berm around the stockpile to prevent both runoff from the pile and run-on to the pile. The location of this berm is indicated on Plate 2-3 and the design of the berm is noted in Appendix 7-9. Furthermore, erosion from the stockpile will be minimized through the establishment of a vegetative cover on the pile, as indicated in Section 234.200 of this M&RP.

Runoff from ASCA-6 will be precluded from flowing to the sedimentation pond because of a crest in the water-tank access road. Instead, runoff from this area will flow to Dugout Creek via culvert

DC-7A (see Addendum A to Appendix 7-9). Sediment generated from this ASCA will be controlled by installing silt fences or straw-bale dikes in the ditch immediately upstream from the inlet to culvert DC-7A. These sediment-control devices will be installed in accordance with Figure 5-4. Sediment which accumulates behind these devices will be periodically removed and either spread on the adjacent road or disposed of with waste-rock generated from the mine.

Sediment-control measures will be implemented during the relocation of the west fork of Dugout Creek. These measures will include installation of three straw-bale dikes and/or reinforced silt fences in appropriate locations within the creek channel below the relocation site to minimize potential contributions of sediment to Dugout Creek. The straw-bale dikes/silt fences will remain in-place until channel relocation and pad construction is completed.

Sedimentation Ponds. A single sedimentation pond has been designed for the Dugout Canyon Mine facilities. The sedimentation pond will be located in the southwest corner of the disturbed area. This pond will function individually.

The sedimentation pond will be located as near as possible to the disturbed areas as indicated on Plates 7-4 and 7-5. The pond will not be located within a perennial stream channel.

Design, Construction, and Maintenance

Sediment Storage Volume. The sedimentation pond has been designed to control sediment from disturbed and undisturbed areas. The disturbed area contributing runoff to the sedimentation pond contains 16.9 acres from watersheds DWS-1 through DWS-7 (portions of which will be undisturbed or contemporaneously reclaimed - see Appendix 7-9). The undisturbed area contributing runoff to the sedimentation pond contains 33.7 acres from watersheds WS-1, -3, -5, -6, -7, -8, -9a, and -11. Refer to Plates 7-7 and 7-8 for a delineation of watershed boundaries.

The sedimentation pond was designed to fully contain the sediment generated by disturbed and undisturbed areas. Based on calculations presented in Appendix 7-8, the sedimentation pond has been designed with a sediment storage capacity of 0.40 acre-foot. The elevation of the maximum sediment level will be 6954.8 feet. The 60% sediment clean-out volume of 0.24 acre-foot will have an elevation of 6952.2 feet.

Detention Time. An adequate detention time will be provided in the pond to allow the effluent to meet UPDES and 40 CFR Part 434 limitations. The decant water will be sampled and discharged from the pond in accordance with the above referenced effluent limitations.

Design Event. The sedimentation pond has been designed to fully contain runoff resulting from the 10-year, 24-hour precipitation event.

Pond Description. Several drainage areas, identified on Plates 7-7 and 7-8, will contribute runoff to the sedimentation pond. The disturbed drainage areas contributing to the pond will be DWS-1 through DWS-7 and the pond itself. The undisturbed drainage areas contributing to the pond will be WS-1, -3, -5, -6, -7, -8, -9a, and -11, as well as portions of the above-mentioned "disturbed" watersheds. These undisturbed drainage areas will discharge to the pond because construction of diversion ditches along the top of cut slopes may create cut-slope stability problems. Also, constructing ditches on steep slopes is expensive and disturbs a larger area. The selected course of action was to allow undisturbed runoff to flow onto the disturbed area and be treated in the sedimentation pond.

The curve numbers used to determine the runoff volumes were based on information presented in Appendix 7-8 and Appendix 7-9. The curve number for the pond area was assumed to be 100. Refer to Table 7-6 for a list of all disturbed and undisturbed watershed areas contributing to the sedimentation pond and their associated curve numbers.

The storm runoff volume to the sedimentation pond resulting from the 10-year, 24-hour storm event was calculated to be 69,913 cubic feet (1.60 acre-feet). The calculations, presented in Appendix 7-8, are based on hydrologic design methods described in Appendix 7-10. As presented above, the maximum sediment storage volume is 0.40 acre-foot (17.424 cubic feet). Thus, the capacity of the pond at the elevation of the primary spillway is 87,337 cubic feet (2.00 acre-feet), assuming the spillway does not spill during the 10-year, 24-hour storm.

In order to fully contain the runoff from the 10-year, 24-hour storm event and the maximum sediment storage, the primary spillway on the sedimentation pond will be set at an elevation

Excessive Settlement. The sedimentation pond is to be excavated from native undisturbed material, thereby making settlement highly unlikely. Less than 2 feet of the embankment will be constructed. The portion of the embankment to be constructed will be constructed in a manner to minimize settlement. Stability analyses presented in Chapter 5 indicated that the pond embankment will be stable under both normal and rapid drawdown conditions.

Embankment Material. During construction of the sedimentation pond, any material to be used in the embankment will be inspected to ensure the material is free of sod, large roots, frozen soil, and acid- or toxic forming coal-processing waste.

Compaction. The sedimentation pond will be primarily excavated out of native undisturbed ground, thereby eliminating the need for additional compaction. Any portion of the embankment tht will be constructed wil be compacted to a minimum dry density of 90 % as determined by ASTM D1557.

MSHA Sedimentation Ponds. MSHA requirements defined in 30 CFR 77.216 are mot applicable at this mine since the proposed sedimentation pond will not impound water or sediment to an elevation of 20 feet or more above the upstream toe of the structure. The pond will also store a volume less than 20 acre-feet.

Other Treatment Facilities. There are no other treatment facilities within the mine permit area.

Exemptions. No exemptions are being proposed at this time.

742.300 Diversions

General Requirements. The diversions within the permit area will consist of drainage ditches and culverts. All diversions within the permit area have been designed to minimize adverse impacts to the hydrologic balance, to prevent material damage outside the permit area, and to assure the safety of the public.

All diversions and diversion structures have been designed and will be constructed, and maintained and used to:

Be stable;
Provide protection against flooding and resultant damage to life and property;

Prevent, to the extent possible, additional contributions of suspended solids to stream flow outside the permit area; and
Comply with all applicable local, state, and federal laws and regulations.

All diversions within the permit area will removed when no longer needed. The diversions will be reclaimed in accordance with the reclamation plan defined in Chapter 5.

Peak discharge rates from the undisturbed and disturbed area drainages within the permit area were calculated for use in designing diversion ditches and culverts. With the exception of the culverts on Dugout Creek, the storm runoff calculations for the temporary diversion structures were based on the 10-year, 24-hour precipitation event of 1.95 inches. For the design of the Dugout Creek culverts, a 100-year, 6-hour precipitation event was used, with a storm depth of 2.05 inches.

Curve numbers were based on those defined in Appendix 7-9 and professional judgement. A description of the methods used to determine the peak discharge rates is presented in Appendix 7-10.

A precipitation gauge will be installed at the mine site in the summer of 2001 to monitor and assess the types of precipitation events occurring at the mine site. The information will be used to determine if precipitation events exceed design parameters.

The disturbed and undisturbed drainage areas within and above the facilities area are presented on Plates 7-6 through 7-8. A summary of the characteristics of watersheds contributing to the diversions is presented in Table 7-6.

~~The size and location of each proposed diversion ditch and culvert will be verified in the field prior to initiating mining.~~ All proposed diversions are presented on Plate 7-5 or in Addendum A to Appendix 7-9. The minimum capacity and freeboard of each diversion ditch and culvert was determined based on the minimum ditch slope. The maximum velocity and need for a channel lining or outlet protection was calculated based on the maximum ditch or culvert slope. Slopes were measured from a contour map with a scale of 1" = 50'. A description of the methods used to determine diversion capacities, flow velocities, and riprap sizes is presented in Appendix 7-10. All diversion calculations are presented in Appendix 7-9.

Diversion of Perennial and Intermittent Streams. Dugout Creek will be diverted through culverts within the disturbed area. UC-4 and UC-5 will consist of 60-inch diameter CMPs with mitered inlets. Both culverts are designed to pass the peak flow, of approximately 90 cfs with a combined flow of approximately 180 cfs below their confluence, from a 100-year, 6-hour storm event without creating a excess headwater above the top of the culvert. The justification for diverting the creek with respect to the stream buffer zones is discussed in Section 731.600. To the extent feasible, these culverts will be installed during a season of the year other than the high-flow season.

Culvert UC-4 will be located on the eastern tributary of Dugout Creek. This culvert will have a constant slope of 4.9% and an approximate length of 160 feet. This culvert will merge with UC-5 approximately 115 feet downstream from the inlet of UC-5.

Culvert UC-5 will be installed on the main branch of Dugout Creek, with a slope that varies from about 2.2% to 8.0% and an approximate length of 2140 feet. This culvert will also consist of a 60-inch diameter CMP. To reduce the velocity at the culvert outlet below the velocities under natural conditions, a riprap basin will be constructed in the channel immediately downstream from the outlet. This riprap basin will extend a minimum of 56.25 feet downstream from the culvert outlet and will be underlain with a geofabric to prevent piping of the soil beneath the riprap (see Appendix 7-9). This riprap section will be periodically monitored and modified if necessary to prevent erosion.

Detailed design calculations for culverts UC-4 and UC-5 can be found in Appendix 7-9. All designs have been prepared by or under the direction of, and certified by a qualified registered, professional engineer. The location of each culvert can be found on Plate 7-5 or in Addendum A to Appendix 7-9.

Calculations presented in Appendix 7-9 indicate that the capacity of Dugout Creek upstream and downstream of culverts UC-4 and UC-5 is in excess of 3,000 cfs. This high natural capacity of the stream channel has been caused by a combination of factors, including steep natural gradients, narrow valleys which preclude the development of flood plains, and erosion of the channels due to headcutting following failure of an old culvert located near the center of the operational facility prior to construction of the Dugout Canyon Mine. Hence, although UC-4 and UC-5 have been designed with a capacity of 180 cfs (see Appendix 7-9), the combined conditions of the stream channel noted above indicate that it is not feasible to design these culverts to have a capacity at least equal to that of the natural channel up- and downstream from the culverts.

The west fork of Dugout Creek near the Gilson water well will be relocated for approximately 50 feet. This will be necessary to protect the retaining wall that stabilizes the well site and other support facilities for the well, mainly the well house. Refer to Appendix 7-11 design calculations and typical channel drawing for RD-4, the relocated portion of Dugout Creek will mimic this design.

Diversion of Miscellaneous Flows. Diversion ditches and culverts have been utilized within the permit area to divert miscellaneous flows from disturbed and undisturbed area drainages.

Diversion Ditches. A summary table of the minimum channel geometry, channel slope, peak discharge, minimum riprap requirements, maximum flow velocity and minimum freeboard values

for each diversion ditch within the facilities area is presented in Table 7-8. All calculations are contained in Appendix 7-9. Within the main facility area, diversion ditches will generally be lined with concrete if required for erosion protection, thereby aiding long-term maintenance of the ditches. Each ditch has adequate capacity and erosion protection to safely pass the peak flow resulting from the 10-year, 24-hour precipitation event. A description of the diversion ditches within the facilities area is presented in Section 732.300.

Diversion Culverts. A summary table of the culvert size, slope, peak discharge, outlet riprap, and outlet flow velocity for each culvert within the facilities area is presented in Table 7-9.

All calculations are contained in Appendix 7-9. Except for culverts UC-4 and UC-5, each culvert has adequate capacity and outlet erosion protection to safely pass the peak flow resulting from the 10-year, 24-hour precipitation event. Culverts UC-4 and UC-5 were designed to convey the peak runoff resulting from the 100-year, 6-hour precipitation event. A description of the diversion culverts within the facilities area is presented in Section 732.300.

Diversion Berms. Although several berms are noted on Plate 7-5, these will be installed primarily to meet MSHA requirements for safety concerns adjacent to slopes. However, these berms may also locally convey runoff from higher-elevation pads to lower-elevation pads, where it will be conveyed via diversion ditches to the sedimentation pond. Since none of the berms have been designed specifically to convey runoff, no calculations concerning the hydraulic characteristics of these berms are provided in Appendix 7-9.

742.400 Road Drainage

All Roads. The proposed roads within the facilities area are the county road which accesses the mine site and the additional roads noted on Plate 5-2. All of the roads will be constructed to include adequate drainage control with the use of diversion ditches and culverts. None of these roads are located in the channel of an intermittent or perennial stream. Control

TABLE 7-9

SUMMARY OF DIVERSION CULVERTS

Diversion Culvert	Minimum Diameter (in)	Material	Inlet Type	Outlet Slope (%)	Peak Flow[a] (cfs)	Outlet Riprap D_{50} (in)
DC-1	18	CMP	Mitered	10.0	0.85	none
DC-2	18	CMP	Drop Inlet	15.8	3.37	12
DC-3	18	CMP	Mitered	5.9	5.73	none
DC-4	18	CMP	Mitered	5.0	1.24	none
DC-5	24	CMP	Mitered	4.2	6.99	none
DC-6	24	CMP	Drop Inlet	30.0	4.89	18
DC-7	18	CMP	Drop Inlet	8.9	2.09	Concreted rubble
DC-7A	22	HDPE	Projecting	5.6	0.2	none
DC-8	18	CMP	Mitered	5.0	2.48	6
DC-9	36	CMP	Mitered	5.0	11.51	9
DC-10	22	HDPE	Head Wall	3.4	4.0	9
DC-11	24	CMP	Head Wall	6.4	5.0	6
UC-1	18	CMP	Mitered	27.6	3.27	none
UC-2	18	CMP	Mitered	51.5	1.35	none
UC-3	18	CMP	Drop Inlet	33.2	1.60	none
UC-4	60	CMP	Headwall	4.9	89.2	none
UC-5	60	CMP	Headwall	6.9	90.4	12[b]
UC-6	18	CMP	Mitered	25.0	1.02	none

(a) Peak discharge resulting from the 10-year, 24-hour precipitation event except culverts UC-4 and UC-5 (designed for the peak discharge resulting from the 100-year, 6-hour event).

(b) To be placed in riprap-lined energy dissipater basin, as indicated in Appendix 7-9.

wildlife, and machinery in the permit and adjacent area. The drill logs and completion diagrams for the water wells are contained in Appendix 7-4.

If a water well is exposed by coal mining and reclamation operations, it will be permanently closed unless otherwise managed in a manner approved by the Division.

750 PERFORMANCE STANDARDS

All mining and reclamation operations will be conducted to minimize disturbance to the hydrologic balance within the permit and adjacent areas, to prevent material damage to the hydrologic balance outside the permit area, and support approved post-mining land uses.

751 Water Quality Standards and Effluent Limitations

Discharges of water from disturbed areas will be in compliance with all Utah and federal water quality laws and regulations and with effluent limitations for coal mining contained in 40 CFR Part 434.

752 Sediment Control Measures

All sediment control measures will be located, maintained, constructed and reclaimed according to plans and designs presented in Sections 732, 742, and 760 of this M&RP.

A sediment trap was constructed in the ditch on the southeast side of the disturbed area as shown on Figure 1 in Addendum A to Appendix 7-9. The trap was installed to collect sediment prior to it reaching the pond, therefore requiring less frequent sediment pond cleaning. The sediment trap has been fully designed to pass design flows, regardless of the quantity of sediment and/or ice collected in the trap. Sediment accumulations within the trap would not be considered a compliance concern. If the trap is unable to direct the water to the pond through culvert DC-11 (24" CMP), the water will flow through the trap and proceed down the existing ditch into the sediment pond.

A sediment basin was constructed above the inlet to culvert DC-10. The function of the sediment basin and sediment trap will be the same, both will pass the design flow regardless of the quantity of sediment in the trap/basin and sediment accumulation will not be a compliance concern. The trap/basin designs are located in Addendum A to Appendix 7-9.

752.100 Siltation Structures and Diversions

Siltation structures and diversions will be located, maintained, constructed and reclaimed according to plans and designs presented in Sections 732, 742, and 763 of this M&RP.

752.200 Road Drainage

All roads will be located, designed, constructed, reconstructed, used, maintained and reclaimed according to plans and designs presented in Sections 732.400, 742.400, and 762 of this M&RP. All roads have been designed to:

- Control or prevent erosion, siltation and the air pollution attendant to erosion by vegetating or otherwise stabilizing all exposed surfaces in accordance with current, prudent engineering practices;
- Control or prevent additional contributions of suspended solids to stream flow or runoff outside the permit area;
- Neither cause nor contribute to, directly or indirectly, the violation of effluent standards given under Section 751;
- Minimize the diminution to or degradation of the quality or quantity of surface- and groundwater systems; and
- Refrain from significantly altering the normal flow of water in streambeds or drainage channels.

753 Impoundments and Discharge Structures

Impoundments and discharge structures will be located, maintained, constructed and reclaimed as described in Sections 733, 734, 743, 745, and 760 of this M&RP.

754 Disposal of Excess Spoil, Coal Mine Waste and Noncoal Mine Waste

Disposal areas for coal mine waste and noncoal mine waste will be located, maintained, constructed and reclaimed as described in Sections 736, 737, 746, 747, 760 and Chapter 5 of this M&RP.

755 Casing and Sealing of Wells

All wells will be managed as described in Sections 551, 748 and 765 of this M&RP.

731.600 Stream Buffer Zones

The surface facilities for the Dugout Canyon Mine will be constructed within 100 feet of Dugout Creek (a perennial stream). However, surface runoff- and sediment-control facilities designed for the site (as discussed in subsequent sections of this chapter) will ensure that coal mining and reclamation operations will not cause or contribute to the violation of applicable Utah or federal water standards and will not adversely affect the water quantity and quality or other environmental resources of the stream.

Stream Channel Diversions. Temporary or permanent stream channel diversions will comply with R645-301-742.300.

Buffer Zone Designation. The area surrounding the streams that is not to be disturbed will be designated as a buffer zone, and SCM will mark those zones as specified in Section 521.200 of this M&RP.

731.700 Cross Sections and Maps

The locations of water rights for current users of surface water flowing into, out of, and within the permit and adjacent areas is provided on Plate 7-2. The locations of each water diversion, collection, conveyance, treatment, storage, and discharge facility to be used in the Dugout Canyon area is presented on Plate 7-5 or in Addendum A to Appendix 7-9.

Locations and elevations of each station to be used for water monitoring during coal mining and reclamation operations are presented on Plate 7-1. The design details and cross sections for the sedimentation pond are provided on Plate 7-4. Other relevant cross sections or maps are presented and discussed in Chapter 5 of this M&RP.

731.800 Water Rights and Replacement

No surface mining will occur in the Dugout Canyon Mine permit area.

732 Sediment Control Measures

The sediment control measures within the permit area have been designed to prevent additional contributions of sediment to streamflow or to runoff outside the permit area. In addition, they have been designed to meet applicable effluent limitations, and minimize erosion to the extent possible.

The structures to be used for the runoff-control plan for the permit area include disturbed and undisturbed area diversion channels, a sedimentation pond, containment berms, silt fences, and road diversions and culverts.

732.100 Siltation Structures

The siltation structure within the permit area will be a sedimentation pond as described in Section 732.200.

732.200 Sedimentation Ponds

There will be a single sedimentation pond operating at the mine facility located at the southwest end of the disturbed area. The sedimentation pond topography and cross sections are presented on Plate 7-4 of this M&RP. Details regarding sedimentation pond design are presented in Appendix 7-8. The staff gauge in the pond will be marked to indicate the 60% clean-out elevation as defined in Section 742. The sedimentation pond is defined as a Class A pond in accordance with TR-60 (U.S. Soil Conservation Service, 1976).

If sediment has accumulated to the 60% clean-out elevation, the pond will be cleaned. The sediment will be transported and either stored at the Banning Loadout or disposed of at the approved waste rock disposal sites as described in Chapter 5 of this M&RP or pumped back into the sealed, abandoned "Gilson West - Old Workings".

The sedimentation pond is within the disturbed area boundary and is subject to final reclamation. The area is included in the calculation of the disturbed area subject to bonding and in the calculation of final reclamation costs.

Compliance Requirements. The sedimentation pond will be maintained until removal in accordance with the reclamation plan (see Section 540 of this M&RP). When the pond is removed, the land will be revegetated in accordance with the reclamation plan defined in Section 540.

The sedimentation pond was designed to contain 0.40 acre-foot of sediment accumulation before being cleaned out. The sedimentation pond will fully contain the runoff from the 10-year, 24-hour storm event in addition to sediment accumulation. The primary spillway for the sedimentation pond will adequately pass the peak flow resulting from the 25-year, 6-hour precipitation event. The pond has also been designed with an emergency spillway to release water from the pond in the event that the primary spillway becomes blocked.

Additional design standards for the pond are presented in Section 742.

MSHA Requirements. MSHA requirements defined in 30 CFR 77.216 are not applicable since the sedimentation pond will not impound water or sediment to an elevation of 20 feet or more above the upstream toe of the structure. The pond will also store a volume less than 20 acre-feet.

732.300 Diversions

The objective of the runoff control plan is to isolate, to the maximum degree possible, runoff from disturbed areas from that of undisturbed areas. This is accomplished by:

- Allowing all upstream runoff in Dugout Creek to bypass the disturbed area through the use of culverts;
- Routing runoff from the adjacent undisturbed areas above the facilities through culverts and diversion ditches where feasible to bypass the disturbed area; and
- Routing any runoff from undisturbed areas which enters the disturbed area into the sediment control system.

The location of each diversion ditch or culvert for the main facility area is presented on Plate 7-5 or in Addendum A to Appendix 7-9. Details regarding design of the diversions are presented in Appendix 7-9. A brief list of the proposed diversion structures follows (refer to Plates 7-6 through 7-8 for the location of each watershed boundary):

Diversion Ditches:

- Interception ditch UD-1 along the southeast border of the disturbed area will collect runoff from adjacent undisturbed watersheds and direct the runoff into Dugout Creek.

- Disturbed drainage ditches DD-1 through DD-7 will be located within the main portion of the facility pad, directing disturbed-area runoff from this pad toward the sedimentation pond.

- Disturbed drainage ditch DD-8 will be located along the north edge of the road that accesses the large and small substation pads. Runoff from ditch DD-8 will be conveyed to the sedimentation pond via culvert DC-7 and ditch DD-7. The runoff from the small substation pad area reports to the sediment pond by way of DD-8, DC-7 and DD-7.

- Disturbed drainage ditch DD-9 will be located on the southeast edge of the portal pad and will convey runoff to the sedimentation pond via ditches DD-6 and DD-7 and culvert DC-5.

- Disturbed drainage ditch DD-10 will be located on the north side of the access road to the portal pad. This ditch will convey runoff to the sedimentation pond via culverts DC-2, DC-3, and DC-5 and ditches DD-5, DD-6, and DD-7.

- Disturbed drainage ditch DD-11 will be located along the west side of the water-tank access road, extending to the interim crest of the road. This ditch will convey runoff to the sedimentation pond via culverts DC-1, DC-2, DC-3, and DC-5 and ditches DD-5, DD-6, and DD-7.

- Disturbed drainage ditches DD-12 through DD-16 will be located along the water-tank access road. Because of the crest in the road between ditches DD-11 and DD-12, runoff from these ditches cannot be conveyed to the sedimentation pond. Thus, alternate sediment control will be provided for the discharge from these ditches (see Section 742.200 of this M&RP).

- Disturbed drainage ditch DD-17 will be located on the northwest border of the water-tank pad. The presence of the above-mentioned crest in the access road requires

that alternate sediment control be provided for the discharge from this ditch (see Section 742.200 of this M&RP).

Diversion Culverts:

- Culverts DC-1, DC-2, DC-3, and DC-5 will be located along the northwest portion of the main facility pad. These culverts will convey runoff from and to various ditches leading to the sedimentation pond. Culverts DC-1 and DC-2 will be connected via a drop inlet, into which ditch DD-10 will discharge.

- Culvert DC-4 will convey runoff from the portal pad via a drop inlet to the lower facility pad. This runoff will ultimately discharge to the sedimentation pond via ditches DD-6 and DD-7 and culvert DC-5.

- Culvert DC-6 will convey water from ditches located on the south side of the facility pad to the sedimentation pond. . The drop inlet structure designs for this culvert are included in Attachment B of Appendix 7-11.

- Culvert DC-7 will convey water from the substation access road into ditch DD-7 and then to the sedimentation pond. A drop inlet will be used on this culvert. The outlet of this diversion into the sediment pond will be riprapped.

- Culverts DC-7A, DC-8 and DC-9 will be located along the water-tank access road, conveying runoff from the roadside ditches to Dugout Creek. Because of the presence of the crest in the road between the facility pad and these culverts, this runoff cannot be conveyed to the sedimentation pond. Hence, alternate sediment control will be provided as noted in Section 742.200 of this M&RP.

- Culverts DC-10 and 11, will be located along the northeast portion of the main facility pad. These culverts will convey disturbed area runoff to the sedimentation pond.

- Culverts UC-1 and UC-2 will convey undisturbed-area runoff from watersheds WS-4 and WS-10, respectively, to the Dugout Creek bypass culvert (UC-5). Culvert UC-3 will convey undisturbed-area runoff from ditch UD-1 to the Dugout Creek culvert (UC-5).

- Culvert UC-4 will be located on the eastern tributary of Dugout Creek. Containing this tributary in a culvert will prevent uncontrolled sediment from the adjacent disturbed area from impacting this water during the operational period. Gabion baskets will be installed adjacent to the culvert as shown on Dwg. No. B101 in Appendix 7-9.

- Culvert UC-5 is located on the main branch of Dugout Creek, containing the creek through the disturbed area and allowing coal-haul trucks to enter and leave the loadout pad and mine access/haul road. Installation of this culvert will protect Dugout Creek from sediment which may be generated from the adjacent disturbed areas.

- Culvert UC-6 will convey undisturbed-area runoff from watershed WS-2 to culvert UC-5.

Diversion Swale:

- Swale SW-1 will capture and convey sheet flow from the road and pad before it exits the disturbed area. Runoff will be directed to the sediment pond at the northwest end of the swale. The discharge point of the swale will be riprapped. The design calculations for SW-1 and riprap are included tin Attachment B of Appendix 7-9.

All diversion ditches will be maintained with adequate riprap or alternative erosion protection in the ditch sections where flow velocities are predicted to be sufficiently high to require a ditch lining. Adequate ditch capacities will be maintained in all ditch sections. Culverts will be kept free of debris and each outlet will be protected with riprap where deemed necessary. Detailed diversion design is presented in Section 742.

732.400 Road Drainage

Road drainage facilities will include diversion ditches, culverts, and containment berms. The road drainage diversion ditches and culverts for the mine site are included in the list of diversions presented in Section 732.300 above. Additional road drainage design information is presented in Section 742.

All road drainage diversions will be maintained and repaired to original condition following the occurrence of a large storm event. Culvert inlets and outlets will be kept clear of sediment and other debris. Culverts to be installed on Dugout Creek to permit turning of the coal haul trucks are discussed in Section 742.300.

733 Impoundments

733.100 General Plans

There will be a single sedimentation pond operating at the mine facility as described in Section 732.200. The sedimentation pond will be located in the southwest corner of the disturbed area. The sedimentation pond topography and cross sections are presented on Plate 7-4 of this M&RP. Detailed design information is presented in Appendix 7-8.

Certification. All maps and cross sections of the sedimentation pond have been prepared by or under the direction of, and certified by a qualified, registered, professional engineer.

Maps and Cross Sections. The topography and cross sections for the sedimentation pond are provided on Plate 7-4 of this M&RP.

Narrative. A description of the sedimentation pond is presented in Sections 732.200 and 742 of this M&RP.

Subsidence Survey Results. No underground coal mining will occur beneath the proposed sedimentation pond. Therefore, there will be no effects on the pond or pond embankment from subsidence.

Hydrologic Impact. The hydrologic and geologic information required to assess the hydrologic impacts of the proposed sedimentation pond are presented in Section 724 and Chapter 6 of this M&RP, respectively.

Design Plans and Construction Schedule. There are no additional structures proposed for the mining operation at this time. Any structures proposed in the future will not be constructed until the Division has approved the detailed design plan for the structure.

733.200 Permanent and Temporary Impoundments

Requirements. The sedimentation pond has been designed using current, prudent engineering practices. Specific foundation design and construction criteria are presented in Chapter 5 of this M&RP. Specific hydrologic design criteria for the pond are presented in Section 743. The pond will be inspected regularly based on the schedule contained in Section 514.300.

Permanent Impoundments. There are no permanent impoundment structures proposed for use in mining and reclamation operations within the permit and adjacent areas.

Temporary Impoundments. The Division's authorization is being sought for the construction of the sedimentation pond as a temporary impoundment at the mine as part of coal mining and reclamation operations.

Hazard Notifications. The sedimentation pond will be examined for structural weakness and erosion in accordance with the schedule presented in Section 514.300. A report of these findings will be submitted to the Division as outlined in Section 514.300.

734 Discharge Structures

Discharge structures within the Dugout Canyon Mine facilities area will consist of the primary and emergency spillway on the sedimentation pond and a discharge line from the underground workings. All discharge structures will be constructed and maintained to comply with R645-301-744.

735 Disposal of Excess Spoil

There will be no excess spoil generated at the mine.

736 Coal Mine Waste

Coal mine waste will be stored and disposed of as described in Chapter 5.

737 Noncoal Mine Waste

Noncoal mine waste will be stored and disposed of as described in Chapter 5.

738 Temporary Casing and Sealing of Wells

Each groundwater monitoring well identified on Plate 7-1 will be operated and maintained as described in Section 748.

740 DESIGN CRITERIA AND PLANS

741 General Requirements

This M&RP includes site-specific plans that incorporate minimum design criteria for the control of drainage from disturbed and undisturbed areas.

742 Sediment Control Measures

742.100 General Requirements

Design. Sediment-control measures have been designed to provide the following:

- Prevent additional contributions of sediment to stream flow or to runoff outside the permit area;
- Meet the effluent limitations defined in Section 751; and
- Minimize erosion to the extent possible.

Measures and Methods. The sediment control measures at the mine will include practices carried out within and adjacent to the disturbed area. Sediment control methods will include:

- Retention of sediment within the disturbed area;
- Diversion of runoff away from the disturbed area;
- Diversion of runoff using channels or culverts through disturbed areas to prevent additional erosion;

- Provision of silt fences, riprap, contemporaneous revegetation, vegetative sediment filters, a sedimentation pond, and other measures that reduce overland flow velocities, reduce runoff volumes or trap sediment; and
- Treatment of mine drainage in underground sumps.

742.200 Siltation Structures

General Requirements. Additional contributions of suspended solids and sediment to stream flow or runoff outside the permit area will be prevented to the extent possible using a sedimentation pond. The pond will be constructed before mining operations begin. The structures will be certified by a qualified registered professional engineer.

The sedimentation pond has been designed and will be constructed and maintained as described in Chapter 5 and Sections 733 and 743.

Some areas within the disturbed area boundary will not flow to the sedimentation pond. Areas not contributing runoff to the sedimentation pond would be impractical, if not impossible, to divert to the sedimentation pond due to their location. The proposed disturbed areas which will not flow to the sedimentation pond can be generally described as areas downstream from the sedimentation pond, areas along the water-tank access road, and the area occupied by the water tanks.

Areas of alternate sediment control (ASCAs) are shown on Plate 7-8 and in Addendum A to Appendix 7-9. These include ASCA-1 (a small portion of the primary haul road downstream from the sedimentation pond), ASCA-2 (the water-tank access road upstream from the crest in the road at the top of watershed DWS-1 and downstream from culvert DC-9), ASCA-3 (the water-tank access road upstream from culvert DC-8), ASCA-4 (the water-tank area), ASCA-5 (the topsoil storage area) and ASCA-6 (the water-tank access road upstream from culvert DC-7A).

ASCA-1 will consist of a small portion of the primary haul road adjacent to and downstream from the sedimentation pond. Sediment control in this area will be provided by paving the road, thus precluding the production of sediment from the ASCA.

Runoff from ASCA-2 will be precluded from flowing to the sedimentation pond because of a crest in the water-tank access road at the downstream edge of this ASCA. Instead, runoff from this area will flow to Dugout Creek via culvert DC-8 (see Plate 7-5). Sediment generated from this ASCA will be controlled by installing silt fences or straw-bale dikes in ditch DD-13 immediately upstream from the inlet to culvert DC-8. These sediment-control devices will be installed in accordance with Figure 5-4. Sediment which accumulates behind these devices will be periodically removed and either spread on the adjacent road or disposed of with waste-rock generated from the mine.

Runoff from ASCA-3 will be precluded from flowing to the sedimentation pond for the reasons outlined above. This runoff will flow to Dugout Creek via culvert DC-9 (see Plate 7-5). Sediment generated from this ASCA will be controlled by installing silt fences or straw-bale dikes in ditch DD-14 immediately upstream from the inlet to culvert DC-9. These sediment-control devices will be installed in accordance with Figure 5-4. Sediment which accumulates behind these devices will be periodically removed and either spread on the adjacent road or disposed of with waste-rock generated from the mine.

ASCA-4 consists of the water-tank area and the adjacent cut slope. Sediment yield from this area will be controlled by placing a layer of gravel around the water tanks and the explosives magazines. The cut slope west of the water tanks will also be contemporaneously reclaimed using the interim seed mix identified in Section 341.200 of this M&RP. Runoff which is generated from this ASCA will also flow through culvert DC-9, with additional sediment control being provided at the inlet to this culvert as discussed above.

An additional alternate sediment control measure (ASCA-5) will be implemented at the topsoil storage area. Sediment contributions from this stockpile will be controlled by placing a berm around the stockpile to prevent both runoff from the pile and run-on to the pile. The location of this berm is indicated on Plate 2-3 and the design of the berm is noted in Appendix 7-9. Furthermore, erosion from the stockpile will be minimized through the establishment of a vegetative cover on the pile, as indicated in Section 234.200 of this M&RP.

Runoff from ASCA-6 will be precluded from flowing to the sedimentation pond because of a crest in the water-tank access road. Instead, runoff from this area will flow to Dugout Creek via culvert DC-7A (see Addendum A to Appendix 7-9). Sediment generated from this ASCA will be controlled

by installing silt fences or straw-bale dikes in the ditch immediately upstream from the inlet to culvert DC-7A. These sediment-control devices will be installed in accordance with Figure 5-4. Sediment which accumulates behind these devices will be periodically removed and either spread on the adjacent road or disposed of with waste-rock generated from the mine.

Sediment-control measures will be implemented during the relocation of the west fork of Dugout Creek. These measures will include installation of three straw-bale dikes and/or reinforced silt fences in appropriate locations within the creek channel below the relocation site to minimize potential contributions of sediment to Dugout Creek. The straw-bale dikes/silt fences will remain in-place until channel relocation and pad construction is completed.

Sedimentation Ponds. A single sedimentation pond has been designed for the Dugout Canyon Mine facilities. The sedimentation pond will be located in the southwest corner of the disturbed area. This pond will function individually.

The sedimentation pond will be located as near as possible to the disturbed areas as indicated on Plates 7-4 and 7-5. The pond will not be located within a perennial stream channel.

Design, Construction, and Maintenance

Sediment Storage Volume. The sedimentation pond has been designed to control sediment from disturbed and undisturbed areas. The disturbed area contributing runoff to the sedimentation pond contains 16.9 acres from watersheds DWS-1 through DWS-7 (portions of which will be undisturbed or contemporaneously reclaimed - see Appendix 7-9). The undisturbed area contributing runoff to the sedimentation pond contains 33.7 acres from watersheds WS-1, -3, -5, -6, -7, -8, -9a, and -11. Refer to Plates 7-7 and 7-8 for a delineation of watershed boundaries.

The sedimentation pond was designed to fully contain the sediment generated by disturbed and undisturbed areas. Based on calculations presented in Appendix 7-8, the sedimentation pond has been designed with a sediment storage capacity of 0.40 acre-foot. The elevation of the maximum sediment level will be 6954.8 feet. The 60% sediment clean-out volume of 0.24 acre-foot will have an elevation of 6952.2 feet.

Detention Time. An adequate detention time will be provided in the pond to allow the effluent to meet UPDES and 40 CFR Part 434 limitations. The decant water will be sampled and discharged from the pond in accordance with the above referenced effluent limitations.

Design Event. The sedimentation pond has been designed to fully contain runoff resulting from the 10-year, 24-hour precipitation event.

Pond Description. Several drainage areas, identified on Plates 7-7 and 7-8, will contribute runoff to the sedimentation pond. The disturbed drainage areas contributing to the pond will be DWS-1 through DWS-7 and the pond itself. The undisturbed drainage areas contributing to the pond will be WS-1, -3, -5, -6, -7, -8, -9a, and -11, as well as portions of the above-mentioned "disturbed" watersheds. These undisturbed drainage areas will discharge to the pond because construction of diversion ditches along the top of cut slopes may create cut-slope stability problems. Also, constructing ditches on steep slopes is expensive and disturbs a larger area. The selected course of action was to allow undisturbed runoff to flow onto the disturbed area and be treated in the sedimentation pond.

The curve numbers used to determine the runoff volumes were based on information presented in Appendix 7-8 and Appendix 7-9. The curve number for the pond area was assumed to be 100. Refer to Table 7-6 for a list of all disturbed and undisturbed watershed areas contributing to the sedimentation pond and their associated curve numbers.

The storm runoff volume to the sedimentation pond resulting from the 10-year, 24-hour storm event was calculated to be 69,913 cubic feet (1.60 acre-feet). The calculations, presented in Appendix 7-8, are based on hydrologic design methods described in Appendix 7-10. As presented above, the maximum sediment storage volume is 0.40 acre-foot (17.424 cubic feet). Thus, the capacity of the pond at the elevation of the primary spillway is 87,337 cubic feet (2.00 acre-feet), assuming the spillway does not spill during the 10-year, 24-hour storm.

In order to fully contain the runoff from the 10-year, 24-hour storm event and the maximum sediment storage, the primary spillway on the sedimentation pond will be set at an elevation

Excessive Settlement. The sedimentation pond is to be excavated from native undisturbed material, thereby making settlement highly unlikely. Less than 2 feet of the embankment will be constructed. The portion of the embankment to be constructed will be constructed in a manner to minimize settlement. Stability analyses presented in Chapter 5 indicated that the pond embankment will be stable under both normal and rapid drawdown conditions.

Embankment Material. During construction of the sedimentation pond, any material to be used in the embankment will be inspected to ensure the material is free of sod, large roots, frozen soil, and acid- or toxic forming coal-processing waste.

Compaction. The sedimentation pond will be primarily excavated out of native undisturbed ground, thereby eliminating the need for additional compaction. Any portion of the embankment tht will be constructed wil be compacted to a minimum dry density of 90 % as determined by ASTM D1557.

MSHA Sedimentation Ponds. MSHA requirements defined in 30 CFR 77.216 are mot applicable at this mine since the proposed sedimentation pond will not impound water or sediment to an elevation of 20 feet or more above the upstream toe of the structure. The pond will also store a volume less than 20 acre-feet.

Other Treatment Facilities. There are no other treatment facilities within the mine permit area.

Exemptions. No exemptions are being proposed at this time.

742.300 Diversions

General Requirements. The diversions within the permit area will consist of drainage ditches and culverts. All diversions within the permit area have been designed to minimize adverse impacts to the hydrologic balance, to prevent material damage outside the permit area, and to assure the safety of the public.

All diversions and diversion structures have been designed and will be constructed, and maintained and used to:

Be stable;
Provide protection against flooding and resultant damage to life and property;

Prevent, to the extent possible, additional contributions of suspended solids to stream flow outside the permit area; and
Comply with all applicable local, state, and federal laws and regulations.

All diversions within the permit area will removed when no longer needed. The diversions will be reclaimed in accordance with the reclamation plan defined in Chapter 5.

Peak discharge rates from the undisturbed and disturbed area drainages within the permit area were calculated for use in designing diversion ditches and culverts. With the exception of the culverts on Dugout Creek, the storm runoff calculations for the temporary diversion structures were based on the 10-year, 24-hour precipitation event of 1.95 inches. For the design of the Dugout Creek culverts, a 100-year, 6-hour precipitation event was used, with a storm depth of 2.05 inches.

Curve numbers were based on those defined in Appendix 7-9 and professional judgement. A description of the methods used to determine the peak discharge rates is presented in Appendix 7-10.

A precipitation gauge will be installed at the mine site in the summer of 2001 to monitor and assess the types of precipitation events occurring at the mine site. The information will be used to determine if precipitation events exceed design parameters.

The disturbed and undisturbed drainage areas within and above the facilities area are presented on Plates 7-6 through 7-8. A summary of the characteristics of watersheds contributing to the diversions is presented in Table 7-6.

All proposed diversions are presented on Plate 7-5 or in Addendum A to Appendix 7-9. The minimum capacity and freeboard of each diversion ditch and culvert was determined based on the minimum ditch slope. The maximum velocity and need for a channel lining or outlet protection was calculated based on the maximum ditch or culvert slope. Slopes were measured from a contour map with a scale of 1" = 50'. A description of the methods used to determine diversion capacities, flow velocities, and riprap sizes is presented in Appendix 7-10. All diversion calculations are presented in Appendix 7-9.

Diversion of Perennial and Intermittent Streams. Dugout Creek will be diverted through culverts within the disturbed area. UC-4 and UC-5 will consist of 60-inch diameter CMPs with mitered inlets. Both culverts are designed to pass the peak flow, of approximately 90 cfs with a combined flow of approximately 180 cfs below their confluence, from a 100-year, 6-hour storm event without creating a excess headwater above the top of the culvert. The justification for diverting the creek with respect to the stream buffer zones is discussed in Section 731.600. To the extent feasible, these culverts will be installed during a season of the year other than the high-flow season.

Culvert UC-4 will be located on the eastern tributary of Dugout Creek. This culvert will have a constant slope of 4.9% and an approximate length of 160 feet. This culvert will merge with UC-5 approximately 115 feet downstream from the inlet of UC-5.

Culvert UC-5 will be installed on the main branch of Dugout Creek, with a slope that varies from about 2.2% to 8.0% and an approximate length of 2140 feet. This culvert will also consist of a 60-inch diameter CMP. To reduce the velocity at the culvert outlet below the velocities under natural conditions, a riprap basin will be constructed in the channel immediately downstream from the outlet. This riprap basin will extend a minimum of 56.25 feet downstream from the culvert outlet and will be underlain with a geofabric to prevent piping of the soil beneath the riprap (see Appendix 7-9). This riprap section will be periodically monitored and modified if necessary to prevent erosion.

Detailed design calculations for culverts UC-4 and UC-5 can be found in Appendix 7-9. All designs have been prepared by or under the direction of, and certified by a qualified registered, professional engineer. The location of each culvert can be found on Plate 7-5 or in Addendum A to Appendix 7-9.

Calculations presented in Appendix 7-9 indicate that the capacity of Dugout Creek upstream and downstream of culverts UC-4 and UC-5 is in excess of 3,000 cfs. This high natural capacity of the stream channel has been caused by a combination of factors, including steep natural gradients, narrow valleys which preclude the development of flood plains, and erosion of the channels due to headcutting following failure of an old culvert located near the center of the operational facility prior to construction of the Dugout Canyon Mine. Hence, although UC-4 and UC-5 have been designed with a capacity of 180 cfs (see Appendix 7-9), the combined conditions of the stream channel noted above indicate that it is not feasible to design these culverts to have a capacity at least equal to that of the natural channel up- and downstream from the culverts.

The west fork of Dugout Creek near the Gilson water well will be relocated for approximately 50 feet. This will be necessary to protect the retaining wall that stabilizes the well site and other support facilities for the well, mainly the well house. Refer to Appendix 7-11 design calculations and typical channel drawing for RD-4, the relocated portion of Dugout Creek will mimic this design.

Diversion of Miscellaneous Flows. Diversion ditches and culverts have been utilized within the permit area to divert miscellaneous flows from disturbed and undisturbed area drainages.

Diversion Ditches. A summary table of the minimum channel geometry, channel slope, peak discharge, minimum riprap requirements, maximum flow velocity and minimum freeboard values

for each diversion ditch within the facilities area is presented in Table 7-8. All calculations are contained in Appendix 7-9. Within the main facility area, diversion ditches will generally be lined with concrete if required for erosion protection, thereby aiding long-term maintenance of the ditches. Each ditch has adequate capacity and erosion protection to safely pass the peak flow resulting from the 10-year, 24-hour precipitation event. A description of the diversion ditches within the facilities area is presented in Section 732.300.

Diversion Culverts. A summary table of the culvert size, slope, peak discharge, outlet riprap, and outlet flow velocity for each culvert within the facilities area is presented in Table 7-9.

All calculations are contained in Appendix 7-9. Except for culverts UC-4 and UC-5, each culvert has adequate capacity and outlet erosion protection to safely pass the peak flow resulting from the 10-year, 24-hour precipitation event. Culverts UC-4 and UC-5 were designed to convey the peak runoff resulting from the 100-year, 6-hour precipitation event. A description of the diversion culverts within the facilities area is presented in Section 732.300.

Diversion Berms. Although several berms are noted on Plate 7-5, these will be installed primarily to meet MSHA requirements for safety concerns adjacent to slopes. However, these berms may also locally convey runoff from higher-elevation pads to lower-elevation pads, where it will be conveyed via diversion ditches to the sedimentation pond. Since none of the berms have been designed specifically to convey runoff, no calculations concerning the hydraulic characteristics of these berms are provided in Appendix 7-9.

742.400 Road Drainage

All Roads. The proposed roads within the facilities area are the county road which accesses the mine site and the additional roads noted on Plate 5-2. All of the roads will be constructed to include adequate drainage control with the use of diversion ditches and culverts. None of these roads are located in the channel of an intermittent or perennial stream. Control

TABLE 7-9

SUMMARY OF DIVERSION CULVERTS

Diversion Culvert	Minimum Diameter (in)	Material	Inlet Type	Outlet Slope (%)	Peak Flow[a] (cfs)	Outlet Riprap D_{50} (in)
DC-1	18	CMP	Mitered	10.0	0.85	none
DC-2	18	CMP	Drop Inlet	15.8	3.37	12
DC-3	18	CMP	Mitered	5.9	5.73	none
DC-4	18	CMP	Mitered	5.0	1.24	none
DC-5	24	CMP	Mitered	4.2	6.99	none
DC-6	24	CMP	Drop Inlet	30.0	4.89	18
DC-7	18	CMP	Drop Inlet	8.9	2.09	Concreted rubble
DC-7A	22	HDPE	Projecting	5.6	0.2	none
DC-8	18	CMP	Mitered	5.0	2.48	6
DC-9	36	CMP	Mitered	5.0	11.51	9
DC-10	22	HDPE	Head Wall	3.4	4.0	9
DC-11	24	CMP	Head Wall	6.4	5.0	6
UC-1	18	CMP	Mitered	27.6	3.27	none
UC-2	18	CMP	Mitered	51.5	1.35	none
UC-3	18	CMP	Drop Inlet	33.2	1.60	none
UC-4	60	CMP	Headwall	4.9	89.2	none
UC-5	60	CMP	Headwall	6.9	90.4	12[b]
UC-6	18	CMP	Mitered	25.0	1.02	none

(a) Peak discharge resulting from the 10-year, 24-hour precipitation event except culverts UC-4 and UC-5 (designed for the peak discharge resulting from the 100-year, 6-hour event).

(b) To be placed in riprap-lined energy dissipater basin, as indicated in Appendix 7-9.

wildlife, and machinery in the permit and adjacent area. The drill logs and completion diagrams for the water wells are contained in Appendix 7-4.

If a water well is exposed by coal mining and reclamation operations, it will be permanently closed unless otherwise managed in a manner approved by the Division.

750 PERFORMANCE STANDARDS

All mining and reclamation operations will be conducted to minimize disturbance to the hydrologic balance within the permit and adjacent areas, to prevent material damage to the hydrologic balance outside the permit area, and support approved post-mining land uses.

751 Water Quality Standards and Effluent Limitations

Discharges of water from disturbed areas will be in compliance with all Utah and federal water quality laws and regulations and with effluent limitations for coal mining contained in 40 CFR Part 434.

752 Sediment Control Measures

All sediment control measures will be located, maintained, constructed and reclaimed according to plans and designs presented in Sections 732, 742, and 760 of this M&RP.

A sediment trap was constructed in the ditch on the southeast side of the disturbed area as shown on Figure 1 in Addendum A to Appendix 7-9. The trap was installed to collect sediment prior to it reaching the pond, therefore requiring less frequent sediment pond cleaning. The sediment trap has been fully designed to pass design flows, regardless of the quantity of sediment and/or ice collected in the trap. Sediment accumulations within the trap would not be considered a compliance concern. If the trap is unable to direct the water to the pond through culvert DC-11 (24" CMP), the water will flow through the trap and proceed down the existing ditch into the sediment pond.

A sediment basin was constructed above the inlet to culvert DC-10. The function of the sediment basin and sediment trap will be the same, both will pass the design flow regardless of the quantity of sediment in the trap/basin and sediment accumulation will not be a compliance concern. The trap/basin designs are located in Addendum A to Appendix 7-9.

752.100 Siltation Structures and Diversions

Siltation structures and diversions will be located, maintained, constructed and reclaimed according to plans and designs presented in Sections 732, 742, and 763 of this M&RP.

752.200 Road Drainage

All roads will be located, designed, constructed, reconstructed, used, maintained and reclaimed according to plans and designs presented in Sections 732.400, 742.400, and 762 of this M&RP. All roads have been designed to:

- Control or prevent erosion, siltation and the air pollution attendant to erosion by vegetating or otherwise stabilizing all exposed surfaces in accordance with current, prudent engineering practices;
- Control or prevent additional contributions of suspended solids to stream flow or runoff outside the permit area;
- Neither cause nor contribute to, directly or indirectly, the violation of effluent standards given under Section 751;
- Minimize the diminution to or degradation of the quality or quantity of surface- and groundwater systems; and
- Refrain from significantly altering the normal flow of water in streambeds or drainage channels.

753 Impoundments and Discharge Structures

Impoundments and discharge structures will be located, maintained, constructed and reclaimed as described in Sections 733, 734, 743, 745, and 760 of this M&RP.

754 Disposal of Excess Spoil, Coal Mine Waste and Noncoal Mine Waste

Disposal areas for coal mine waste and noncoal mine waste will be located, maintained, constructed and reclaimed as described in Sections 736, 737, 746, 747, 760 and Chapter 5 of this M&RP.

755 Casing and Sealing of Wells

All wells will be managed as described in Sections 551, 748 and 765 of this M&RP.

ADDENDUM A
To
APPENDIX 7-9

Culvert Design Drawings and Calculations

REGISTERED PROFESSIONAL ENGINEER
10-10-03
No. 189797
LAYNE D.
JENSEN
STATE OF UTAH

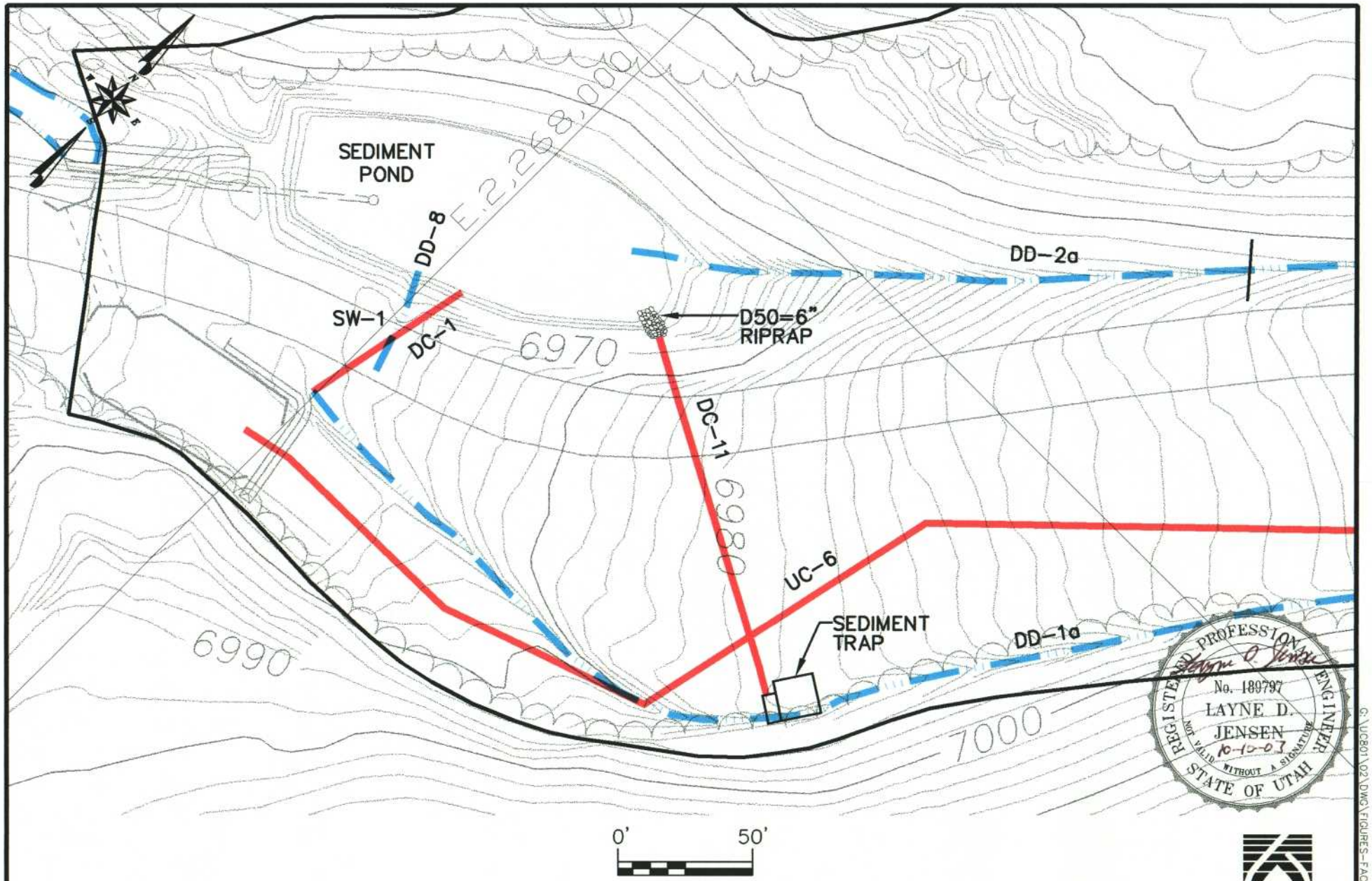

FIGURE 1. PROPOSED SEDIMENT TRAP AND CULVERT DC-11

EarthFax

G:\UC801\02\DWG\FIGURES-FAC.DWG\10-09-03

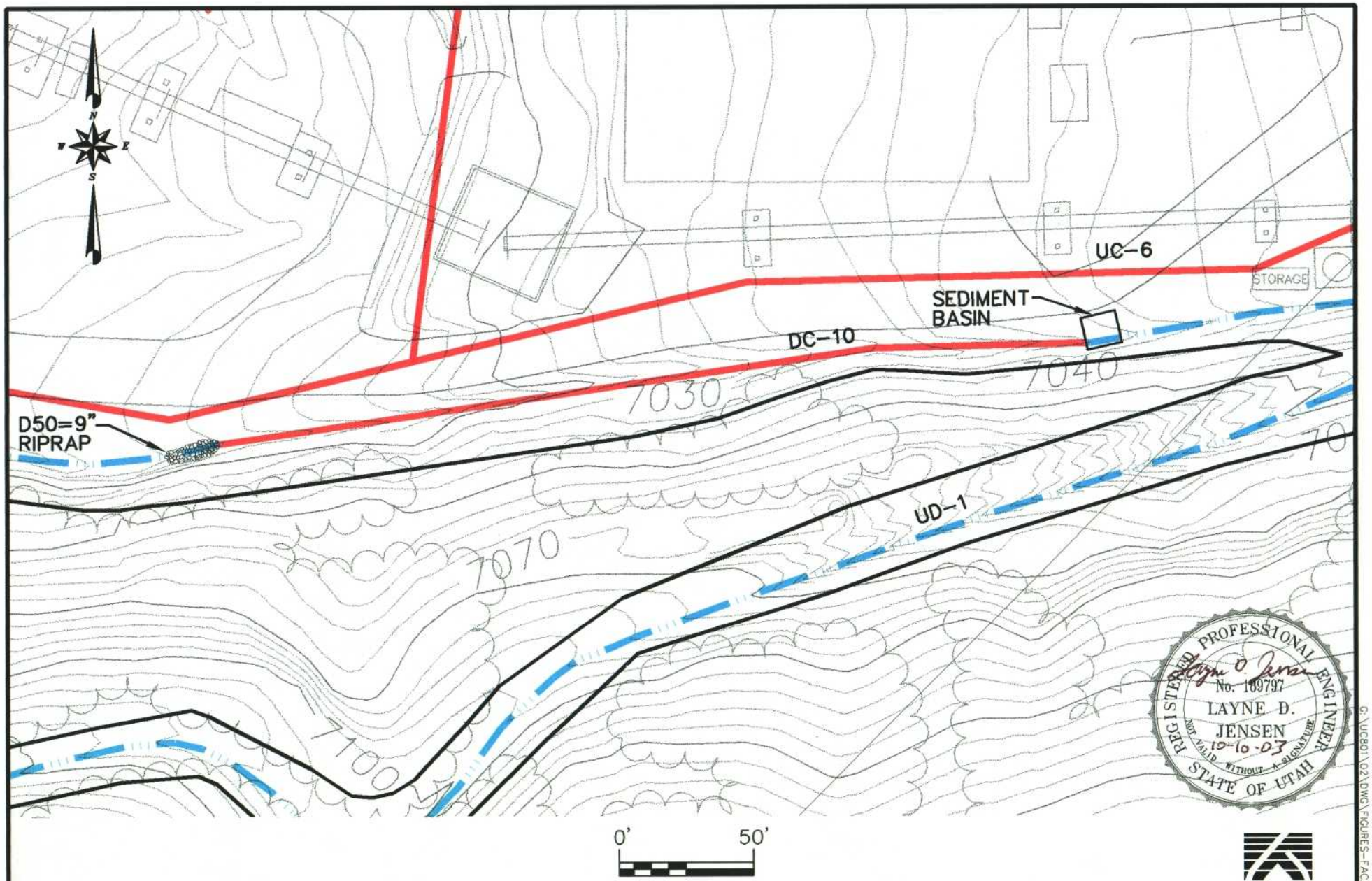

FIGURE 2. PROPOSED CULVERT DC-10 AND SEDIMENT BASIN

EarthFax

G:\UCB01\02\DWG\FIGURES-FAC.DWG\10-09-03

G:\UC801\02\DWG\FIGURES-FAC.DWG\10-09-03

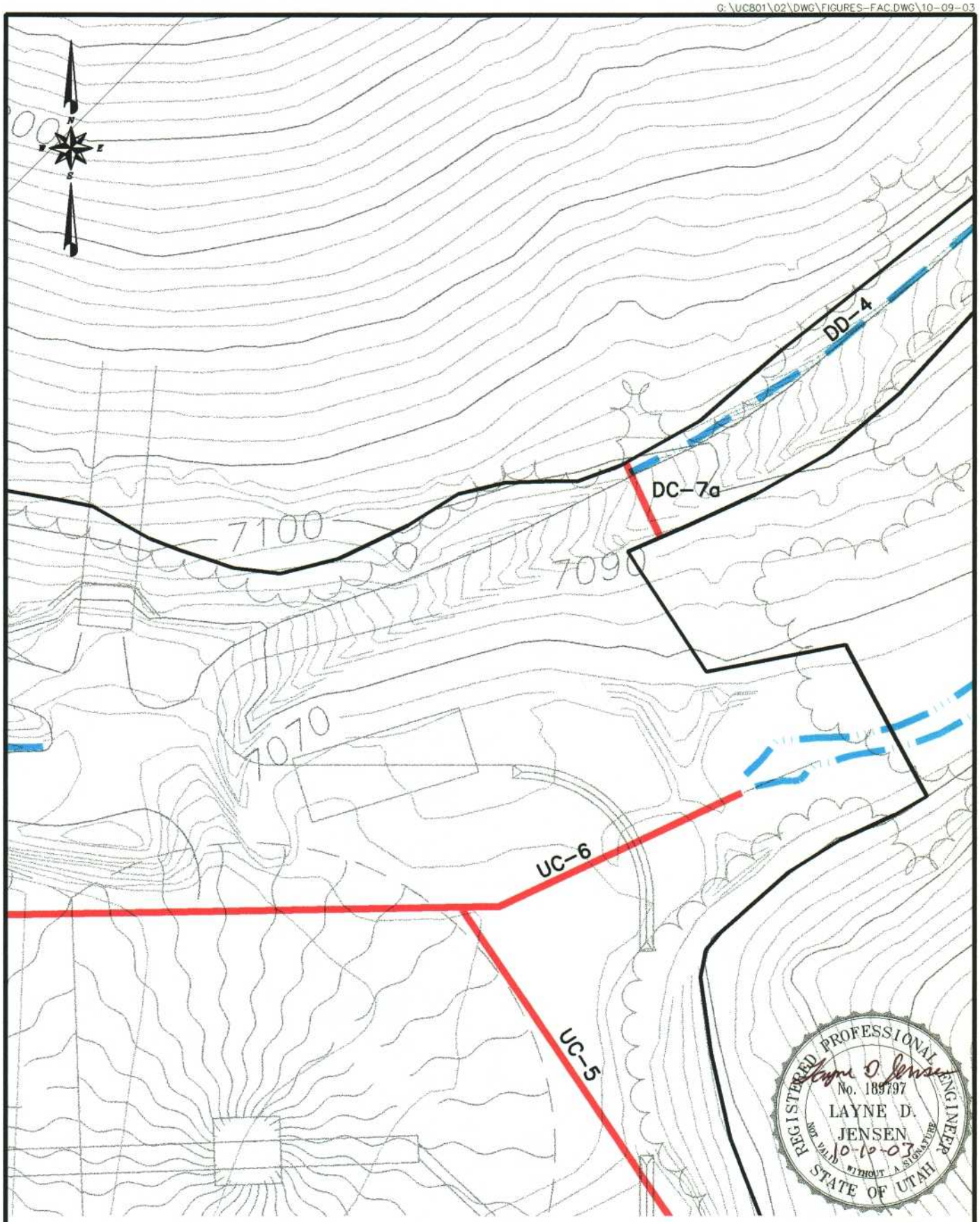

0' 50'

FIGURE 3. PROPOSED CULVERT DC-7a

EarthFax

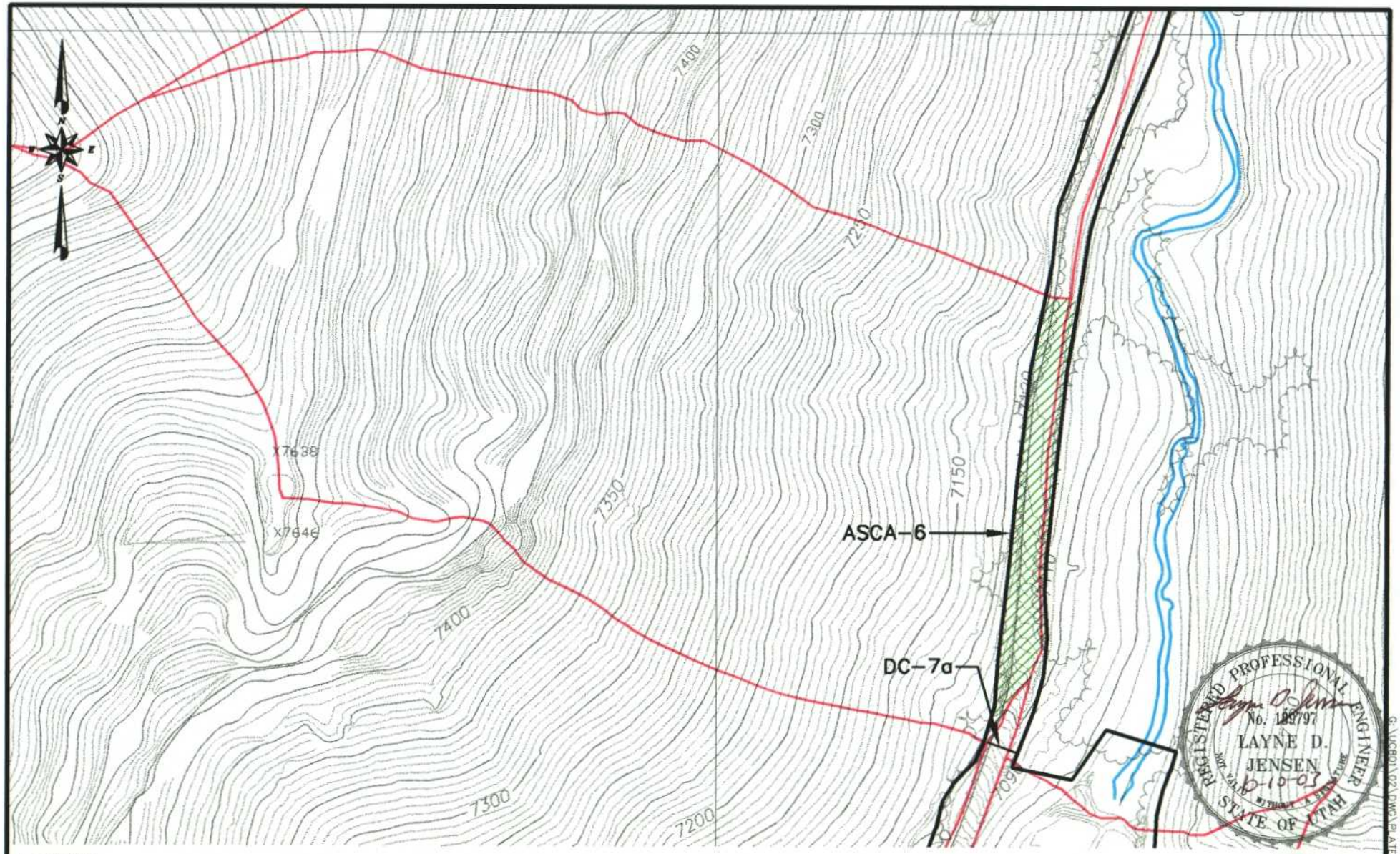

LEGEND

ALTERNATE SEDIMENT CONTROL AREA

0' 120'

FIGURE 4. DC-7A WATERSHED

EarthFax

G:\UC801\02\DWG\PLATE7-7-2003.DWG\10-10-03

CALCULATIONS

Sediment Trap, Sediment Basin, and Culvert Design

The proposed sediment trap and basin are being installed with the intent of dropping out a majority of the sediment which is currently reporting to the sediment pond. Sediment is difficult to remove from the pond so it is beneficial to limit the sediment in the pond. The sediment trap and basin are intended to function best in the warmer months when a lot of coal fines are washed into the ditches. The sediment trap and basin will allow these coal fines to be recovered prior to reaching the sediment pond. In the winter the sediment trap and basin will be in the shadows most of the day and are likely to fill with ice and become non-functional. The sediment trap and basin have been designed to allow runoff to flow through them even if they are full of sediment or ice. The current system of ditches and culverts which diverts runoff to the sediment pond will be left intact. Thus, even if the sediment trap and basin are not functioning the runoff will still be diverted to the sediment pond. The storage capacity of the sediment trap and basin are not being added to the capacity of the sediment pond. The sediment pond will still be assumed to be treating the entire runoff volume from the design storm event. Since the capacity of the sediment trap and basin are not being included in the available treatment volume the sediment trap and basin will not require constant maintenance. The sediment trap and basin will be maintained at the mines convenience. The location of the sediment trap can be seen on Figure 1. The location of the sediment basin can be seen on Figure 2.

The following calculations verify that the sediment trap and basin can handle the design event and that the runoff control system will still be functional even if the sediment trap and basin are not maintained.

Sediment Trap

A plan view and two cross-sections of the sediment trap are shown on pages 5 and 6. The diversion ditch will flow directly into the concrete sediment trap. When the water reaches a depth of 3.5' it will begin to flow over an eight inch thick wall into a basin connected to a 24" culvert (DC-11). The culvert flows directly into the sediment pond. If the culvert becomes plugged by ice or debris the basin has an overflow that will return the runoff to the existing diversion ditch. Thus, even if the culvert is blocked runoff will still reach the sediment pond. The inlet, spillway, and overflow are all eight inch wide concrete walls. The flow depth over these walls can be modeled using the equation for a broad crested weir. The equation is as follows:

$$Q = 3.087bH^{1.5}$$

Where: Q = flow (cfs)
b = channel width (ft)
H = flow depth (ft)

To be conservative a flow of 5 cfs is being assumed. This is greater than the flow expected in the diversion ditch during the design storm event. Solving the equation for the flow depth H yields the following equation:

$$H = (Q/(3.087)(b))^{1/1.5}$$

Using the above equation the inlet with a bottom width (b = 4') has a flow depth of 0.55'. The minimum channel depth is 1.2' giving a freeboard of 0.65'. This is conservative since it assumes that the water is only flowing slowly before flowing over the broad crested weir when in actuality the water is flowing at over 4 fps in the ditch immediately upstream of the sediment trap.

The spillway has a bottom width (b=10.5') which gives a flow depth of 0.29'. The spillway is 1.5' below the top of the ramp resulting in a freeboard of 1.21'.

The overflow has a bottom width (b=5') which gives a flow depth of 0.47'. The overflow is 2.5' below the top of the ramp giving a freeboard of 2.03'. The ditch which the overflow flows into has a minimum depth of 1.2' resulting in a freeboard of 0.73' at the point in which the runoff flows into the ditch.

The capacity of the 24" culvert (DC-11) flowing to the sediment pond can be determined using the nomograph on page 13. Since the culvert has a slope of 6.4% the limiting factor will be the inlet capacity of the culvert. The maximum headwater which can develop is 3'. Thus the HW/D ratio is 3/2 or 1.5. The culvert will be cast into a wall which will act like a headwall. Based on the nomograph on page 13 the inlet capacity of a 24" culvert with a HW/D ratio of 1.5 is 20 cfs.

Thus the sediment trap can easily handle a flow of 5 cfs when the culvert is open and can easily pass the flow if the culvert is blocked.

Sediment Basin

The sediment basin is of a very simple design. The plan view and two cross-sections can be seen on pages 7 and 8. The purpose of the sediment basin is to drop out sediment prior to runoff reaching culvert DC-10. The same methodology described for the sediment trap will be used for the basin. The runoff will flow directly into the sediment basin where sediment will drop out prior to runoff flowing into a 22" HDPE culvert at the far end of the sediment basin.

To be conservative a flow of 4 cfs is being assumed. This is greater than the flow expected in the diversion ditch during the design storm event.

The inlet with a bottom width (b = 4') has a flow depth of 0.47'. The minimum channel depth is 1.0' giving a freeboard of 0.53'. This is conservative since it assumes that the water is only flowing slowly before flowing over the broad crested weir when in actuality the water is flowing at over 3 fps in the ditch immediately upstream of the sediment trap.

The capacity of the 22" culvert (DC-10) flowing out of the sediment basin can be determined using the nomograph on page 13. Since the culvert has an approximate slope of 3.4% the limiting factor will be the inlet capacity of the culvert. The maximum headwater which can develop is 2' since the invert of the culvert is 2' below the top of the ramp. Thus the HW/D ratio is 2/1.83 or 1.1. The culvert will be cast into a wall which will act like a headwall. Based on the nomograph on page 13 the inlet capacity of a 22" culvert with a HW/D ratio of 1.1 is 12 cfs.

Thus, the sediment basin can easily handle a flow of 4 cfs. If the sediment basin is full of sediment or ice it will become simply an extension of the existing ditch. Thus the runoff control system will function even if the Sediment basin is not maintained.

Culverts

Three new culverts are being proposed, two of which have already been partially discussed. The design of these culverts follows:

DC-7a

DC-7a is being proposed to divert road runoff from ASCA-6 to Dugout Creek and will be configured in the same manner as approved culverts DC-8 and DC-9 which are located on the same road. The location of DC-7a is shown on Figure 3. This culvert will reduce runoff flowing into the coal stockpile area that is currently causing problems during storm events. The culvert is proposed to be a 22" HDPE pipe. With a slope of 5.6% the capacity of the culvert is determined by the inlet. Thus the nomograph on page 13 will be used to determine capacity. The inlet capacity of DC-7a is 14 cfs with a HW/D ratio of 1.5. The peak flow for the 10-year 6-hour storm event was determined based on the watershed shown on Figure 4. The peak flow was determined to be 0.2 cfs as shown on page 9. Thus the culvert has plenty of capacity.

The culvert will discharge to a very rocky undisturbed slope. As shown on page 10 the outlet velocity is 4.34 fps during the design event which is less than 5 fps. Therefore, no riprap at the outlet is necessary. The naturally rocky slope will provide adequate erosion protection.

DC-10

DC-10 is connected to the sediment basin and the inlet capacity has been verified above. The location of the this culvert can be seen on Figure 2. As shown on page 11 the outlet velocity of 8.96 fps makes outlet protection necessary. The existing channel should be armored with riprap with a D50 of 9 inches based on the nomograph on page 14. The 9 inch riprap should extend 15' below the culvert outlet. A geofabric should also be placed below the riprap.

DC-11

DC-11 is connected to the sediment trap and the inlet capacity has been verified above. The location of the this culvert can be seen on Figure 1. As shown on page 12 the outlet velocity of 7.25 fps makes outlet protection necessary. The culvert outlet should be armored with riprap with a D50 of 6 inches based on the nomograph on page 14. The 6 inch riprap should extend 15' below the culvert outlet into the sediment pond. A geofabric should also be placed below the riprap.

EARTHFAX ENGINEERING, INC.
ENGINEERS / SCIENTISTS

PROJECT UC 801-02 PAGE 5 OF
COMPUTED LOJ DATE 10-9-03
CHECKED DATE

SEDIMENT TRAP

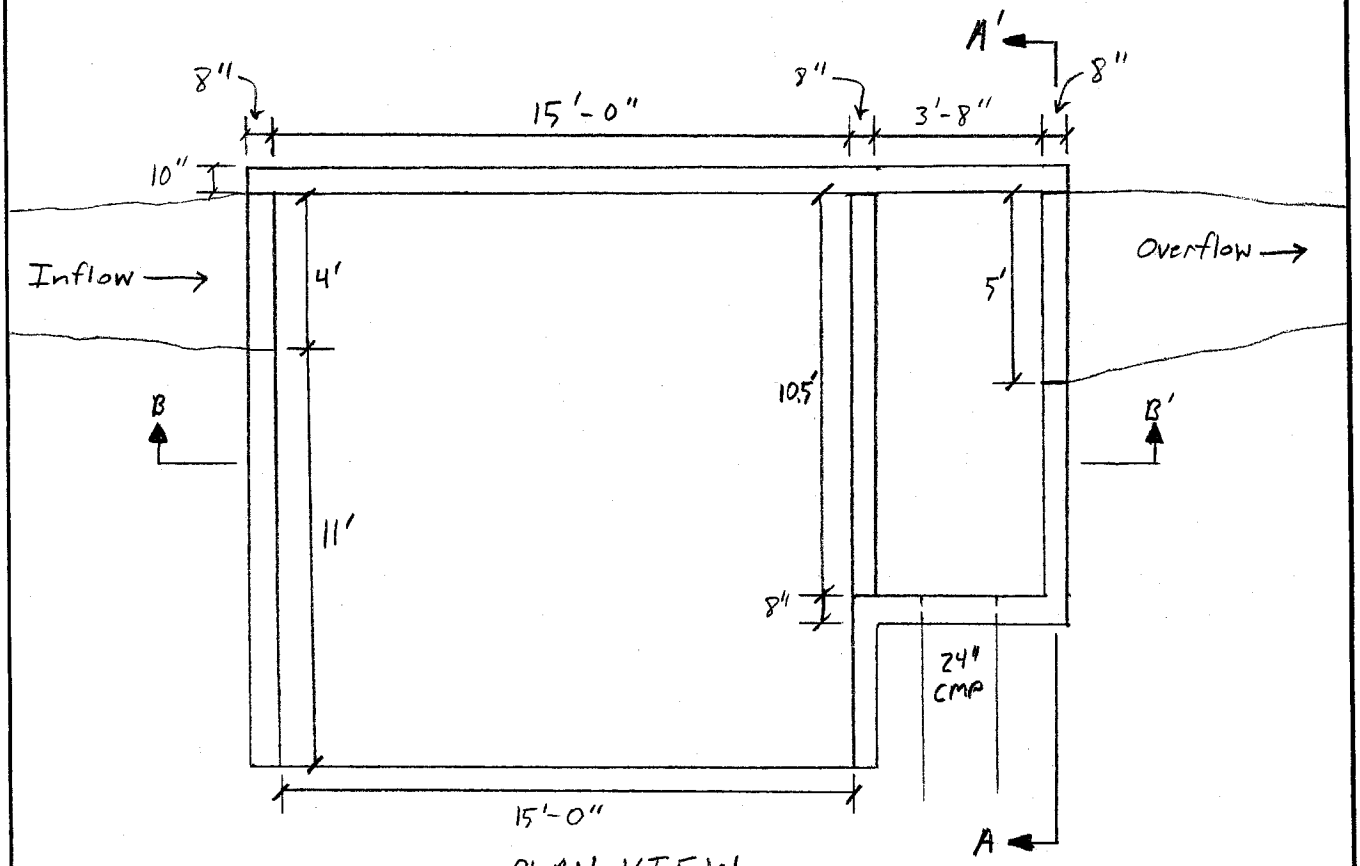

PLAN VIEW

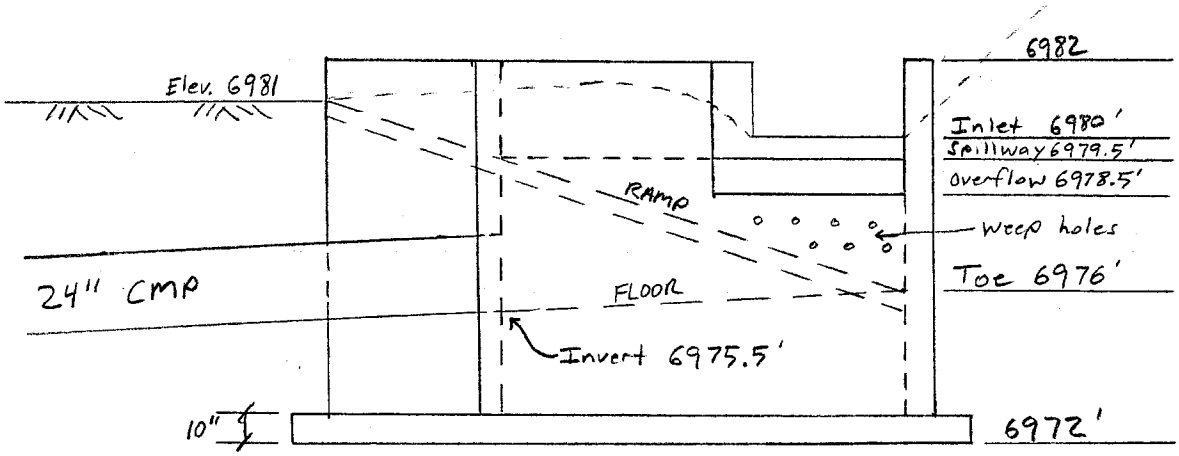

A – A'

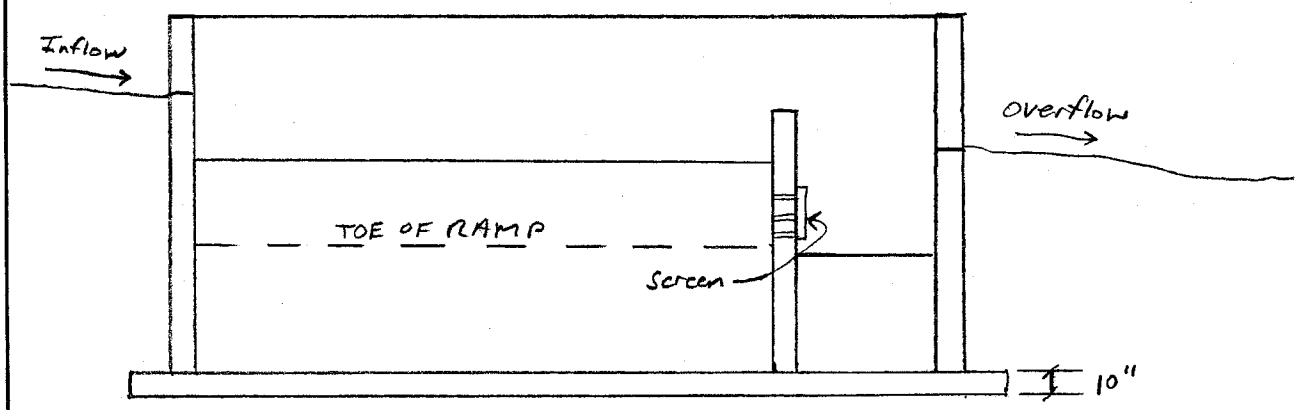

B - B'

SEDIMENT BASIN

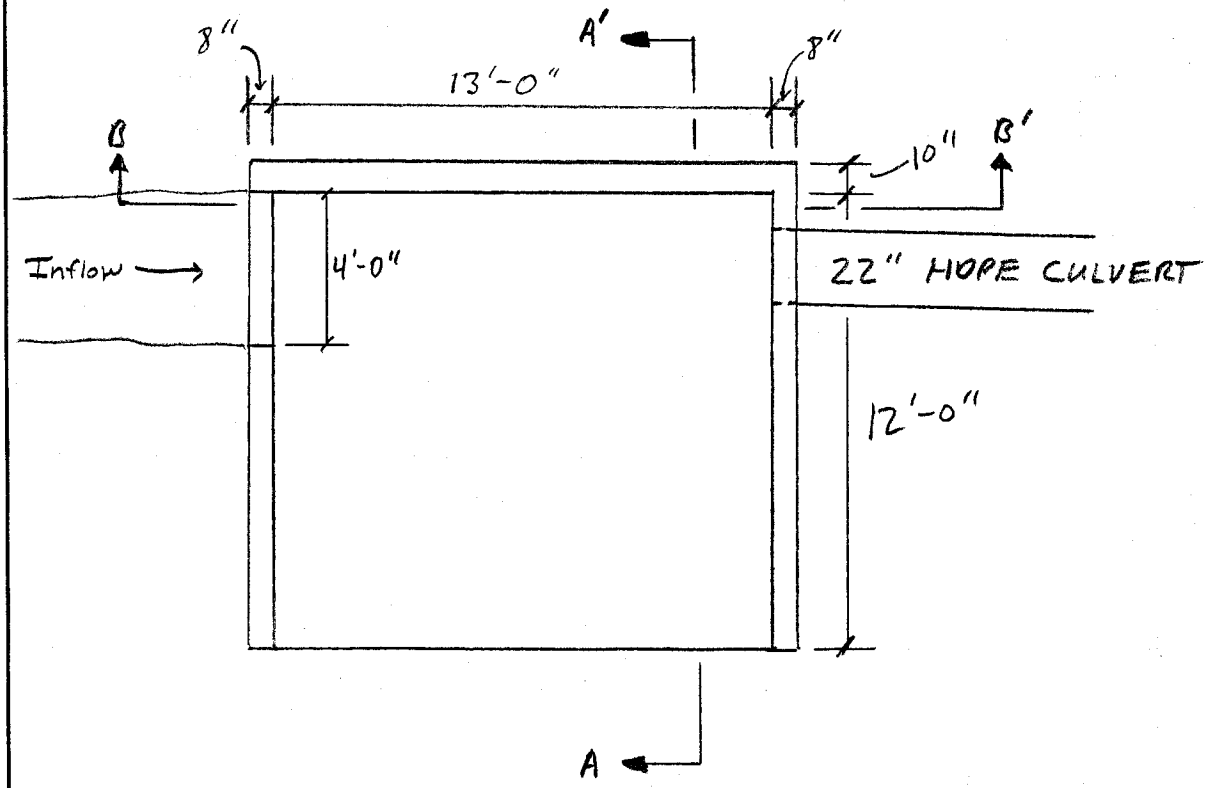

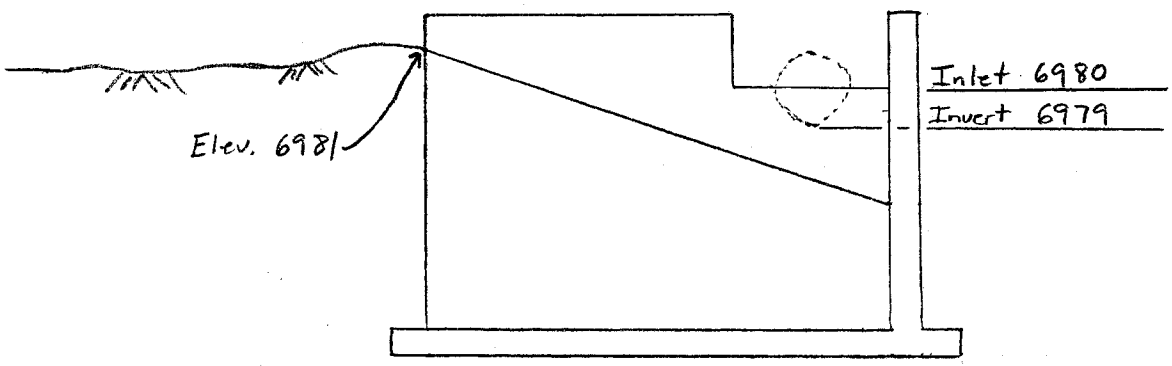

A-A'

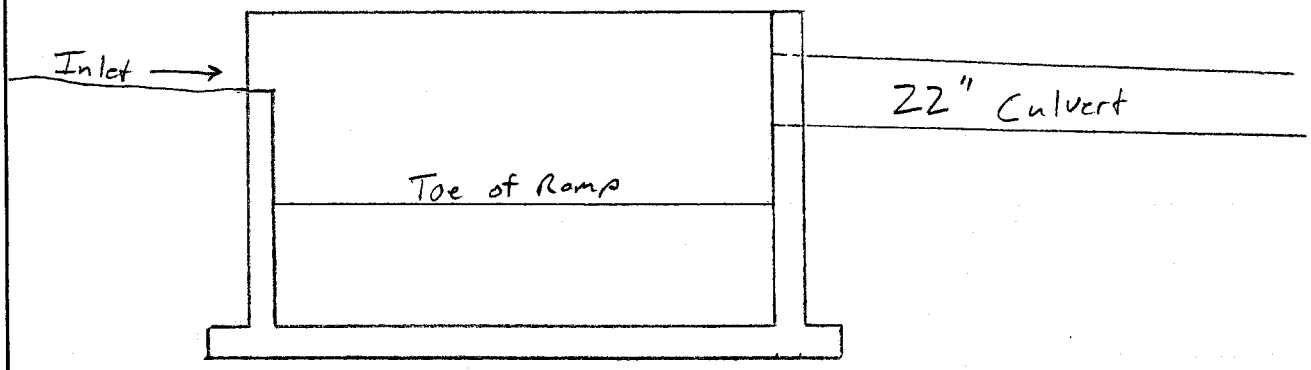

B – B'

Triangular Hydrograph Calculations using

SCSHYDRO Program

Watershed I.D.:
Watershed for DC-7a 10-year 6-hour

INPUT SUMMARY

STORM :	WATERSHED :
Dist.= SCS Type `b'	Area = 7.13 acres
Depth = 1.35 inches	CN = 71.00
Duration = 6.0 hrs	Time conc.= 0.07 hrs

OUTPUT SUMMARY

Runoff depth: 0.062 inches
Initial abstr: 0.817 inches
Peak flow: 0.16 cfs (0.022 iph)
at time: 3.509 hrs

DC-7a Outlet Velocity
Worksheet for Circular Channel

Project Description	
Worksheet	Dugout Canyon Mine
Flow Element	Circular Channel
Method	Manning's Formula
Solve For	Channel Depth

Input Data		
Mannings Coefficient	0.012	
Slope	0.056000	ft/ft
Diameter	22	in
Discharge	0.20	cfs

Results		
Depth	0.09	ft
Flow Area	4.6e-2	ft²
Wetted Perimeter	0.81	ft
Top Width	0.78	ft
Critical Depth	0.16	ft
Percent Full	4.8	%
Critical Slope	0.004815	ft/ft
Velocity	4.34	ft/s
Velocity Head	0.29	ft
Specific Energy	0.38	ft
Froude Number	3.15	
Maximum Discharge	49.46	cfs
Discharge Full	45.98	cfs
Slope Full	0.000001	ft/ft
Flow Type	Supercritical	

DC-10 Outlet Velocity
Worksheet for Circular Channel

Project Description	
Worksheet	Dugout Canyon Mine
Flow Element	Circular Channel
Method	Manning's Formula
Solve For	Channel Depth

Input Data		
Mannings Coefficient	0.012	
Slope	0.034000	ft/ft
Diameter	22	in
Discharge	4.00	cfs

Results		
Depth	0.41	ft
Flow Area	0.4	ft²
Wetted Perimeter	1.81	ft
Top Width	1.53	ft
Critical Depth	0.72	ft
Percent Full	22.6	%
Critical Slope	0.003991	ft/ft
Velocity	8.96	ft/s
Velocity Head	1.25	ft
Specific Energy	1.66	ft
Froude Number	2.93	
Maximum Discharge	38.54	cfs
Discharge Full	35.83	cfs
Slope Full	0.000424	ft/ft
Flow Type	Supercritical	

DC-11 Outlet Velocity
Worksheet for Circular Channel

Project Description	
Worksheet	Dugout Canyon Mine
Flow Element	Circular Channel
Method	Manning's Formula
Solve For	Channel Depth

Input Data		
Mannings Coefficient	0.024	
Slope	0.064000	ft/ft
Diameter	24	in
Discharge	5.00	cfs

Results		
Depth	0.54	ft
Flow Area	0.7	ft²
Wetted Perimeter	2.19	ft
Top Width	1.78	ft
Critical Depth	0.79	ft
Percent Full	27.2	%
Critical Slope	0.015521	ft/ft
Velocity	7.25	ft/s
Velocity Head	0.82	ft
Specific Energy	1.36	ft
Froude Number	2.05	
Maximum Discharge	33.35	cfs
Discharge Full	31.00	cfs
Slope Full	0.001665	ft/ft
Flow Type	Supercritical	

CHART 5

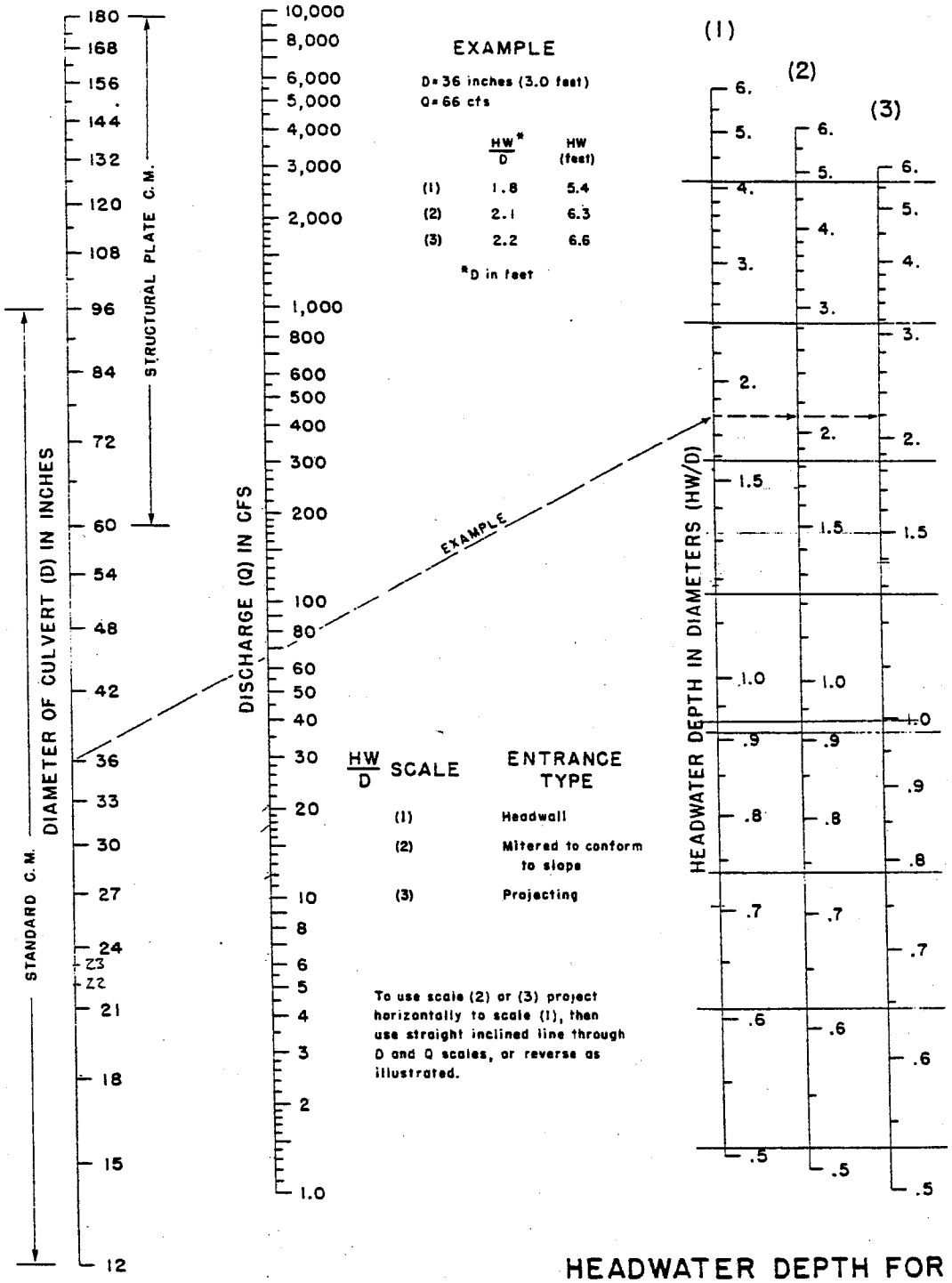

HEADWATER DEPTH FOR C. M. PIPE CULVERTS WITH INLET CONTROL

BUREAU OF PUBLIC ROADS JAN. 1963

Ref (U.S. Dept. of Transportation, 1977)

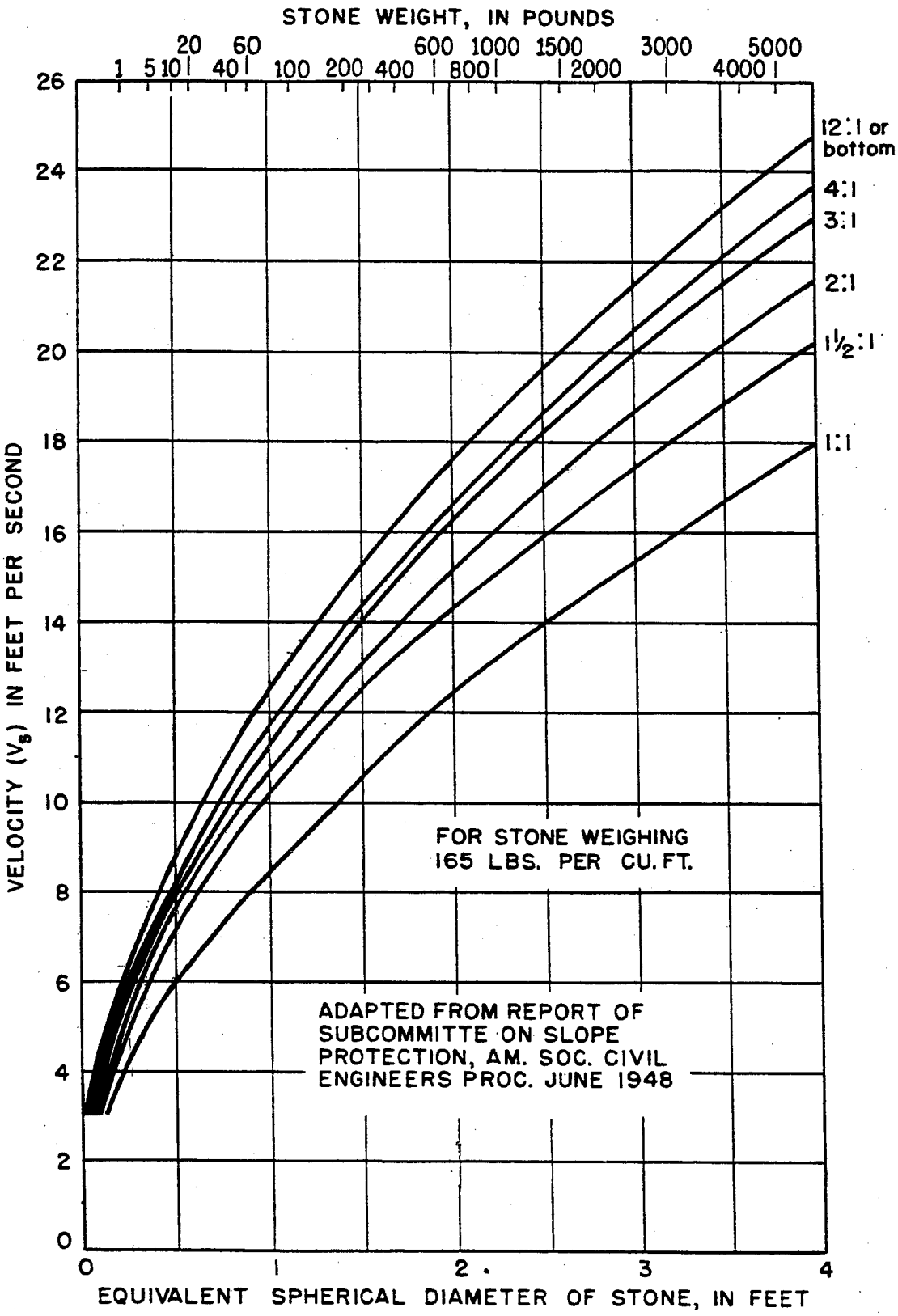

FIG. 2-SIZE OF STONE THAT WILL RESIST DISPLACEMENT FOR VARIOUS VELOCITIES AND SIDE SLOPES

Searcy, J.K. 1967. Use of Riprap for Bank Protection. U.S. Dept. of Transportation, Bureau of Public Roads, U.S Government Printing Office, Washington D.C.